NAVSHIPS 0967-319-4030

CIRCUIT DIAGRAM MANUAL

for

COMPUTER SET AN/UYK-7(V)

VOLUME I

PX 5240-1-4
JANUARY 1971

Change 2 February 1974
NAVSHIPS 0967-319-4032

SPERRY UNIVAC
DEFENSE SYSTEMS

© 1971, 1972, 1973 by SPERRY UNIVAC

LIST OF EFFECTIVE PAGES

PAGE/DRAWING NUMBER	CHANGE IN EFFECT
Volume I	
Title	Change 2
ii and iia/iib thru iv	Change 2
iva thru ivd	Change 2
v	Change 2
vi thru xxxvii	Change 1
7073474 (Sheet 1)	Change 2
7216450 (Sheet 1)	Original
Central Processor	
7073539 (Sheet 1)	Change 2
7073539 (Sheet 2)	Original
7073539 (Sheet 3)	Change 2
7073539 (Sheet 4)	Change 1
7073539 (Sheet 5)	Change 2
7073539 (Sheet 6)	Change 1
7073539 (Sheet 7)	Original
7073539 (Sheets 8,9)	Change 2
7073539 (Sheets 10-12)	Change 1
7073539 (Sheets 13-19)	Change 2
7073539 (Sheets 20-22)	Change 1
7073539 (Sheet 23)	Change 2
7073539 (Sheets 24,25)	Change 1
7073539 (Sheet 26)	Original
7073539 (Sheets 27-30)	Change 2
7073539 (Sheet 31)	Original
7073539 (Sheets 32-35)	Change 2
7073539 (Sheet 36)	Change 1
7073539 (Sheets 37-44)	Change 2
7073539 (Sheets 45,46)	Change 1
7073539 (Sheets 47-58)	Change 2
7073539 (Sheet 59)	Change 1
7073539 (Sheets 60-63)	Original
7073539 (Sheets 64-68)	Change 2
7073539 (Sheet 69)	Original
7073539 (Sheets 70,71)	Change 1
7073539 (Sheet 72)	Original
7073539 (Sheet 73)	Change 2
7073539 (Sheets 74-78)	Original
7073539 (Sheet 79)	Change 1
7073539 (Sheets 80-87)	Original
7073539 (Sheet 88)	Change 2
7073539 (Sheet 89)	Original
7073539 (Sheet 90)	Change 2
7073539 (Sheet 91)	Original
7073539 (Sheet 92)	Change 2
7073539 (Sheet 93)	Original
7073539 (Sheet 94)	Change 2
7073539 (Sheet 95)	Original
7073539 (Sheet 96)	Change 2
7073539 (Sheet 97)	Original
7073539 (Sheets 98-100)	Change 2
7073539 (Sheet 101)	Original
7073539 (Sheet 102)	Change 2
7073539 (Sheet 103)	Original
7073539 (Sheets 104-113)	Change 2
7073539 (Sheets 114-122)	Original
7073539 (Sheet 123)	Change 2
7073539 (Sheets 124-126)	Original
7073539 (Sheets 127)	Change 2
7073539 (Sheets 128-138)	Original
7073539 (Sheet 139)	Change 2
7073539 (Sheets 140-160)	Original
7073539 (Sheet 161)	Change 2
7073539 (Sheets 162-171)	Original
7073539 (Sheets 172,173)	Change 2
7073539 (Sheets 174,175)	Original
7073539 (Sheet 176)	Change 2
7073539 (Sheet 177)	Original
7073539 (Sheet 178)	Change 2
7073539 (Sheet 179)	Original
7073539 (Sheets 180,181)	Change 2
7073539 (Sheet 182)	Original
7073539 (Sheets 183-186)	Change 2
7073539 (Sheet 187)	Change 1
7073539 (Sheets 188,189)	Change 2
7073539 (Sheets 190,191)	Change 1
7073539 (Sheet 192)	Original
7073539 (Sheet 193)	Change 1
7073539 (Sheets 194-198)	Change 2
7073539 (Sheet 199)	Change 1
7073539 (Sheets 200-204)	Change 2
7073539 (Sheet 205)	Original
7073539 (Sheets 206-214)	Change 2
7073539 (Sheet 215)	Change 1
7073539 (Sheet 216)	Original
7073539 (Sheets 217-219)	Change 2
7073539 (Sheets 220-222)	Change 1
7073539 (Sheet 223)	Original
7073539 (Sheets 224,225)	Change 2
7073539 (Sheet 226)	Change 1
7073539 (Sheet 227)	Change 2
7073539 (Sheet 228)	Change 1
7073539 (Sheet 229)	Original
7073539 (Sheets 230,231)	Change 1
7073539 (Sheet 232)	Change 2
7073539 (Sheet 233)	Original
7073539 (Sheet 234)	Change 2
Memory	
7072000 (Sheets 1-3)	Change 2
7072000 (Sheets 4-6)	Original
7072000 (Sheet 7)	Change 2
7072000 (Sheets 8,9)	Original
7072000 (Sheets 10,11)	Change 2
7072000 (Sheets 12-15)	Original
7072000 (Sheet 16)	Change 1
7072000 (Sheets 17-23)	Original
7072000 (Sheets 24,25)	Change 1
7072000 (Sheets 26-28)	Original
7072000 (Sheet 29)	Change 2
7072000 (Sheets 30-50)	Original
7072000 (Sheet 51)	Change 1
7072000 (Sheets 52,53)	Original
7072000 (Sheet 54)	Change 1
7072000 (Sheets 55,56)	Original
7072000 (Sheet 57)	Change 1
7072000 (Sheets 58,59)	Original
7072000 (Sheet 60)	Change 1
7072000 (Sheets 61-69)	Original
7072000 (Sheet 70)	Change 2
7072000 (Sheet 71)	Original
Power Supply	
i	Change 2
7073375 (Sheet 2)	Change 2
7071630 (Sheet 2)	Change 2
7071720 (Sheet 2)	Original
7071725 (Sheet 2)	Original
7071800 (Sheet 2)	Original
7071812 (Sheet 2)	Original
7071881 (Sheet 2)	Original
7071896 (Sheet 2)	Original
7071983 (Sheet 1)	Change 2
7073075 (Sheet 3)	Change 2
7073076 (Sheet 2)	Original
7073175 (Sheet 4)	Change 2
7073190 (Sheet 2)	Original
7216911 (Sheet 2)	Change 2
7216913 (Sheet 2)	Change 2
7217069 (Sheet 2	Change 2
7217072 (Sheet 2)	Change 2
7217074 (Sheet 2)	Change 2
No Drawing Number	Change 2
No Drawing Number	Change 2
Maintenance Console	
i	Change 1
ii thru iii	Change 2
7073481 (Sheets 1,2)	Change 1
7073481 (Sheets 3-5)	Original
7112130 (Sheet 2)	Change 1
7112135 (Sheet 2)	Change 1
7112140 (Sheet 2)	Change 1
Operator's Panel	
i	Change 1
7216356 (Sheets 1-4)	Change 2
Remote Console	
i	Original
7216458 (Sheet 1)	Original
Volume II	
Title	Change 2
ii	Change 2
I/O Controller	
7215800 (Sheet 1)	Change 2
7215800 (Sheet 2)	Original
7215800 (Sheets 3-7)	Change 2
7215800 (Sheet 8)	Original
7215800 (Sheet 9)	Change 2
7215800 (Sheets 10,11)	Original
7215800 (Sheets 12,13)	Change 2
7215800 (Sheets 14,15)	Change 1
7215800 (Sheet 16)	Change 2
7215800 (Sheet 17)	Change 1
7215800 (Sheets 18,19)	Original
7215800 (Sheets 20-22)	Change 2
7215800 (Sheets 23,24)	Change 1
7215800 (Sheet 25)	Original
7215800 (Sheets 26-31)	Change 2
7215800 (Sheets 32,33)	Change 1
7215800 (Sheets 34,35)	Original
7215800 (Sheets 36-38)	Change 2
7215800 (Sheets 39-41)	Original
7215800 (Sheets 42,43)	Change 2
7215800 (Sheets 44-48)	Original
7215800 (Sheet 49)	Change 1
7215800 (Sheet 50)	Change 2
7215800 (Sheet 51)	Original
7215800 (Sheets 52-54)	Change 2
7215800 (Sheets 55-76	Original
7215800 (Sheet 77)	Change 1

LIST OF EFFECTIVE PAGES (CONT.)

PAGE/DRAWING NUMBER	CHANGE IN EFFECT	PAGE/DRAWING NUMBER	CHANGE IN EFFECT	PAGE/DRAWING NUMBER	CHANGE IN EFFECT	PAGE/DRAWING NUMBER	CHANGE IN EFFECT
Volume II (cont)		I/O Adapter (Parallel)					
7215800 (Sheets 78-103)	Original	i	Change 2				
7215800 (Sheet 104)	Change 2	7216023 (Sheets 1-6)	Change 2				
7215800 (Sheet 105)	Original	7216023 (Sheets 7-14)	Change 1				
7215800 (Sheet 106)	Change 2	7216023 (Sheets 15,16)	Change 2				
7215800 (Sheet 107)	Original	7216023 (Sheets 17-20)	Change 1				
7215800 (Sheets 108-113)	Change 1	7216023 (Sheets 21,22)	Change 2				
7215800 (Sheets 114-116)	Original	7216023 (Sheet 23)	Change 1				
7215800 (Sheet 117)	Change 2	7216023 (Sheets 24-31)	Original				
7215800 (Sheets 118-125)	Original	7216023 (Sheets 32,33)	Change 2				
7215800 (Sheets 126-133)	Change 2	7216023 (Sheets 34-37)	Change 1				
7215800 (Sheets 134-149)	Original	7216023 (Sheets 38-40)	Change 2				
7215800 (Sheets 150-156)	Change 1	7216023 (Sheets 41-47)	Original				
7215800 (Sheet 157)	Change 2	7216023 (Sheet 48)	Change 1				
7215800 (Sheets 158-165)	Original	7216023 (Sheets 49,50)	Change 2				
7215800 (Sheets 166-169)	Change 2	7216023 (Sheets 51-54)	Change 1				
7215800 (Sheets 170-174)	Original	7216023 (Sheets 55,56)	Change 2				
7215800 (Sheet 175)	Change 2	7216023 (Sheet 57)	Change 1				
7215800 (Sheets 176,177)	Original	7216023 (Sheets 58-65)	Original				
7215800 (Sheet 178)	Change 2	7216023 (Sheets 66,67)	Change 2				
7215800 (Sheets 179-182)	Original	7216023 (Sheets 68-71)	Change 1				
7215800 (Sheet 183)	Change 2	7216023 (Sheet 72)	Change 2				
7215800 (Sheets 184-186)	Original	7216023 (Sheet 73)	Change 1				
7215800 (Sheet 187)	Change 2						
7215800 (Sheets 188-191)	Original						
7215800 (Sheets 192-197)	Change 2						
7215800 (Sheets 198-200)	Original						
7215800 (Sheet 201)	Change 1						
No Drawing Number (Sheet 202)	Original						
I/O Adapter (Serial)							
i	Change 2						
7073407 (Sheets 1-5)	Change 2						
7073407 (Sheets 6-14)	Original						
7073407 (Sheets 15,16)	Change 2						
7073407 (Sheets 17-20)	Original						
7073407 (Sheets 21,22)	Change 2						
7073407 (Sheets 23-31)	Original						
7073407 (Sheets 32,33)	Change 2						
7073407 (Sheets 34-37)	Original						
7073407 (Sheets 38-40)	Change 2						
7073407 (Sheets 41-48)	Original						
7073407 (Sheets 49,50)	Change 2						
7073407 (Sheets 51-54)	Original						
7073407 (Sheets 55-83)	Change 2						
7073407 (Sheet 84)	Original						

ECP EFFECTIVITY

Change 1 to NAVSHIPS 0967-319-4030 updates the technical manual to cover the following NAVAL SHIP ENGINEERING CENTER approved AN/UYK-7(V) ECP's. The ECP's are installed via FCO MPL 932.

14	67	90	106
25	69	95	107
31	70	96	108
41	71	97	110
43	72	98	111
46	74	99	112
56	84	100	114
57	85	101	116
58	86	103	117
59	87	104	118
65	88	105	121
66	89		

Change 2 to NAVSHIPS 0967-319-4030 updates the technical manual to cover the following NAVAL SHIP ENGINEERING CENTER approved AN/UYK-7(V) ECP's. The ECP's are installed via FCO MPL 1152.

15	127	140	150	179
17	128	141	155	185
19	131	143	158	188
63	132	144	164	
120	139	147	171	

INTRODUCTION

This circuit diagram manual contains functional logic drawings, power schematics, and chassis maps for all units comprising the basic, single-cabinet computer configuration of the AN/UYK-7(V) Computer Set. The manual is divided into two volumes. Each volume contains drawings for the following units.

Volume I	Volume II
Central Processor	I/O Controller
Memory	I/O Adapter (Serial)
Power Supply	I/O Adapter (Parallel)
Maintenance Console	
Operator's Panel	
Remote Console	

As an aid in cross-referencing signals that are routed between two or more units, a table of inter-unit signal cross-references is provided. Table 1 lists all signals that leave one unit as an output signal and enter another unit as an input signal. The signals are arranged in sequential order by functional schematic sheet number and reference designator of the last logic gate or electrical component through which the signal passes before leaving the unit. Each signal is cross-referenced to the functional schematic and logic or component reference designation of the unit(s) to which it is routed as an input signal. The only exceptions to this arrangement are the power supply sheet references, and overtemperature signals from the low and high overtemperature sensors in each unit, except the memory units.

Power supply signals are referenced by the last four digits of the functional schematic drawing number not its sheet number.

Instead of listing the origin, functional diagram, and reference designator for low and high overtemperature sensors, the location of the module containing the temperature sensors, in the chassis, is listed. The overtemperature signals for the three memory units are referenced by origin, functional schematic, and reference designator, as are the other inter-unit signals.

With a few exceptions, the table of inter-unit signals reflects only the basic, single-cabinet configuration. As such, most signals that would be routed to additional central processors, I/O controllers, memory units, or the remote console for an expanded configuration are not listed. The only exceptions are a few signals whose names call direct attention to the fact that they are associated with an expanded configuration. For example, signal REQ MEM BANK 14-15, generated via gate 07 of CP functional schematic sheet 229 and used to select either memory unit 14 or 15 for instruction addressing, is cross-referenced to memory units 14 and 15. However, no destination, functional schematic sheet number, or logic designator is listed, and a footnote is included to state that this signal is not used in the basic configuration. The reason for this is to avoid possible confusion resulting from the signal names which imply that they are used in the basic configuration.

As a further aid to maintenance personnel, figures 1 through 3 are provided to show jack numbering, location, and inter-unit wiring. Figures 4 through 7 show computer set cabling (see the Tech Data Sheet in NAVSHIPS 0967-319-4010 for the applicable cable).

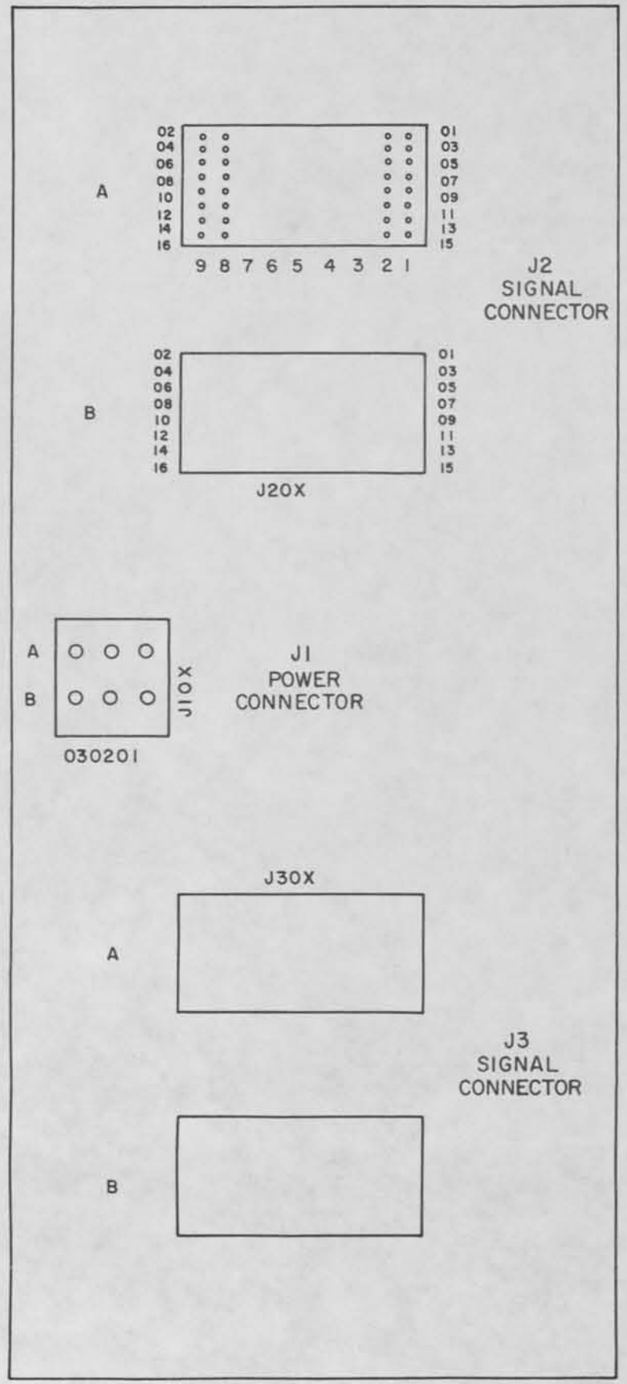

Figure 1. Typical Back Panel Connectors for a CP, Memory, or IOC Unit

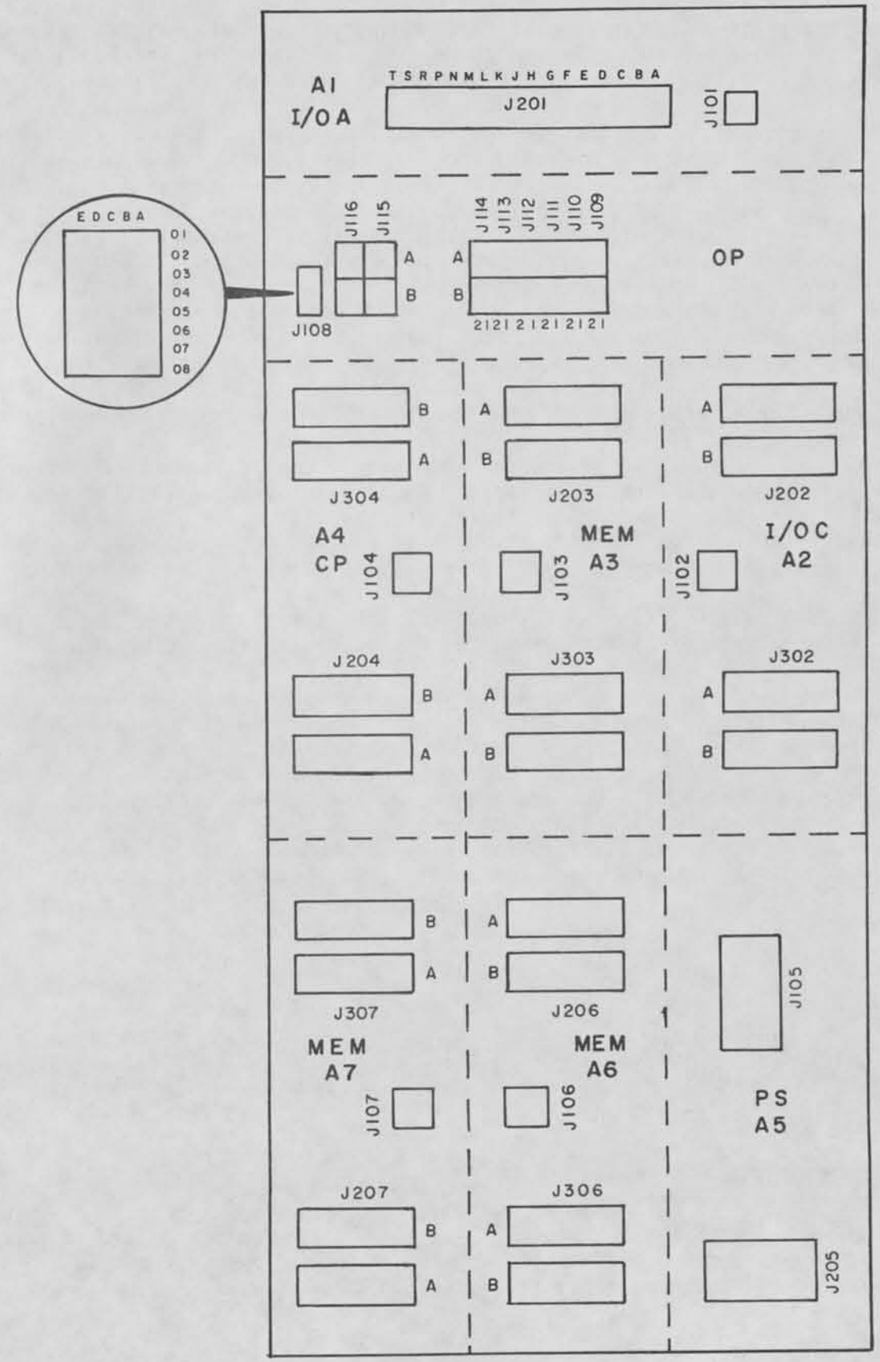

Figure 2. Back View of Cabinet

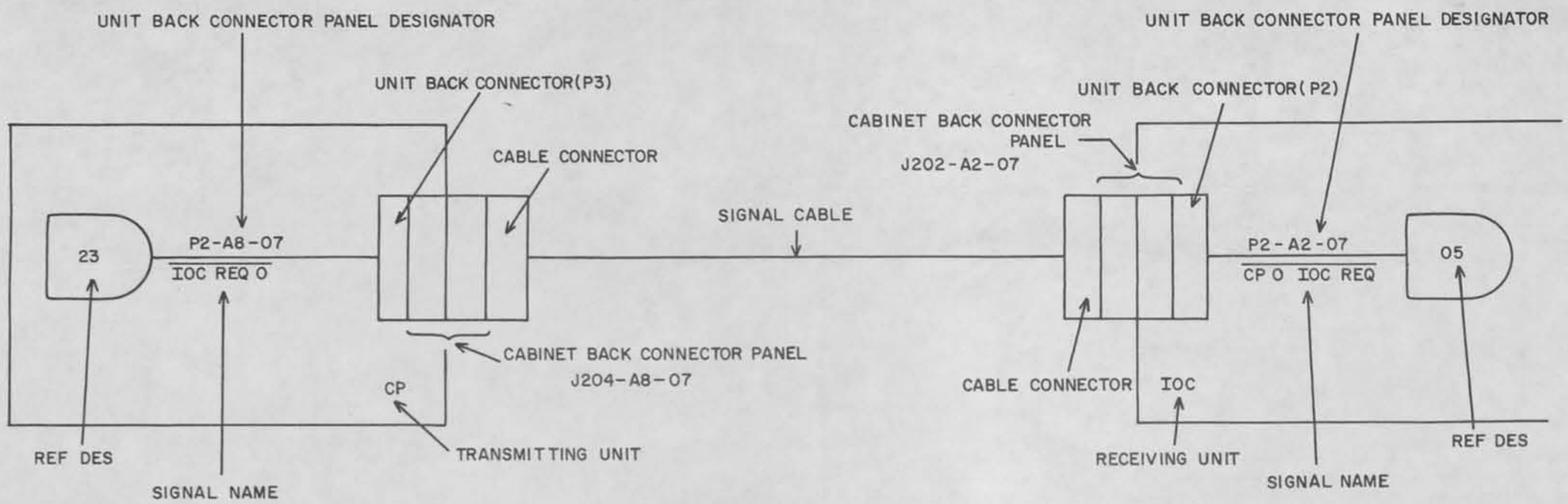

Figure 3. Inter-Unit Wiring Example

Figure 1 shows the back panel view of a single unit set of connectors and illustrates the connector numbering sequence showing the jack numbering, A and B levels of the connectors, and the pin numbering. Some units within the cabinet are turned 180° from that of the illustration. When this is done the jack number, connector levels, and pin numbers are also rotated 180° from those illustrated in figure 1.

Figure 2 is an illustration of the complete back panel showing all the connector numbers and locations, listing the unit located behind each set of connectors and giving the location designation.

Figure 3 is a wiring illustration showing the routing between two separate units of a cabinet.

Figures 1 through 3 are to be used in conjunction with table 1 and the logic diagrams to ascertain the origin and termination of inter-unit signal wiring.

The logic diagrams list a plug (P) or jack (J) reference on signals that are leaving or entering any unit (J10Y is always a power connector). These designations correspond to the connectors on the back panel for that unit. (See figure 1.) A designator on an output signal line such as J2-B7-03 indicates that the signal wire terminates at J20X in the B level column 7, pin 03. If the designator on the output line is designated P2-B7-05 the signal wire terminates at J20X in the B level column 7, pin 05.

Through the information in table 1, which lists the signals designated on the logic diagrams, the corresponding ends of a signal cable can be determined.

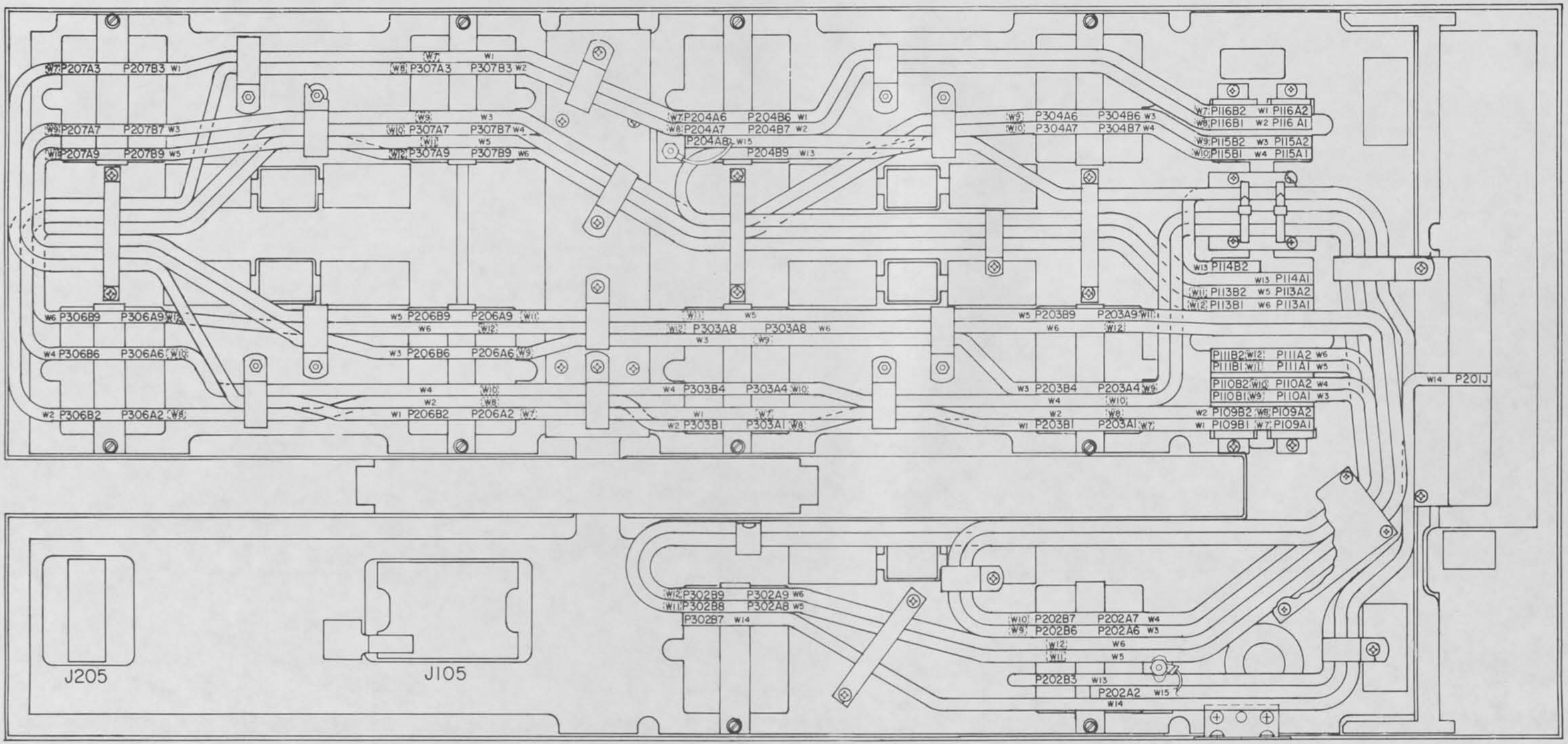

Figure 4. Computer Set, Cabling (7073291)

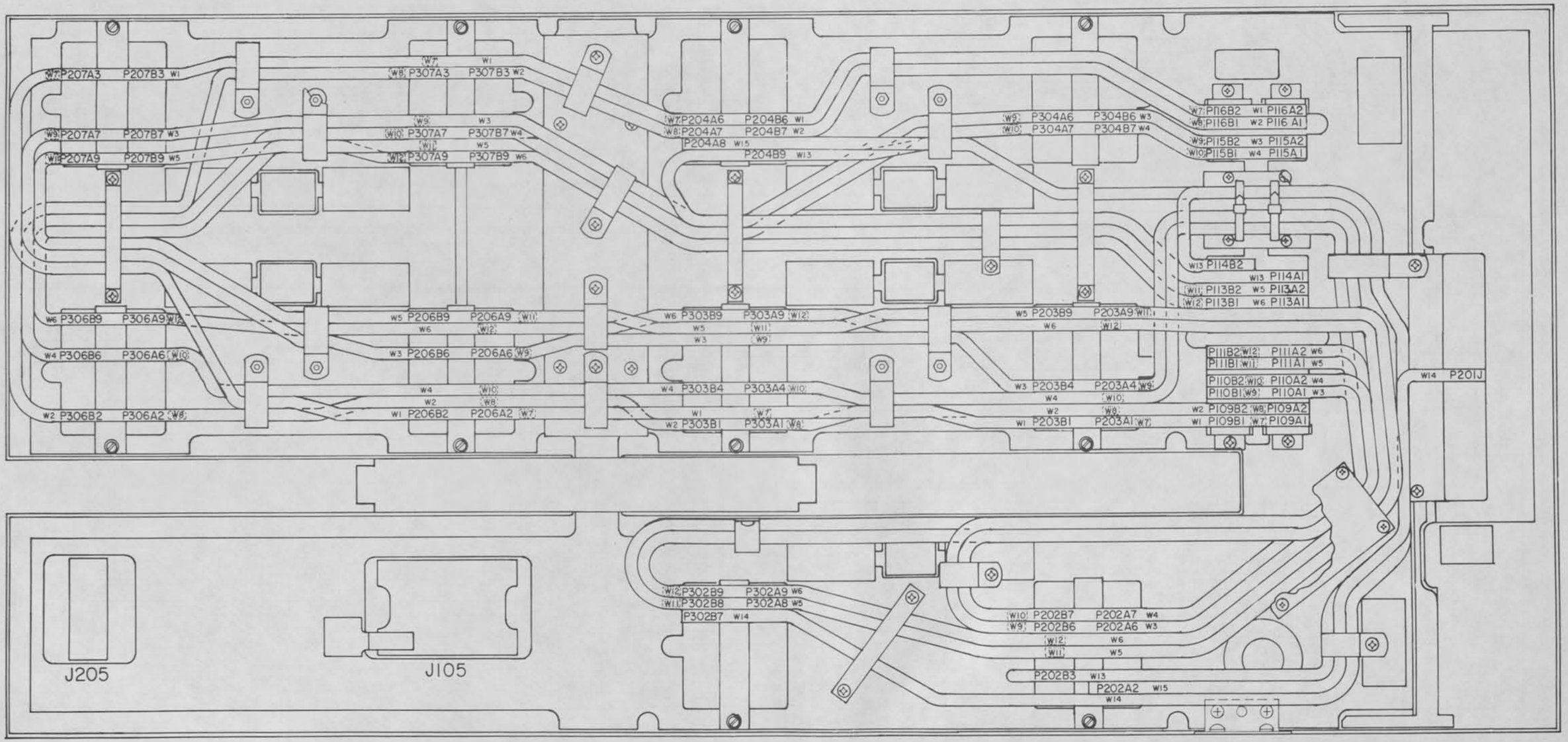

Figure 5. Computer Set, Cabling (7073536)

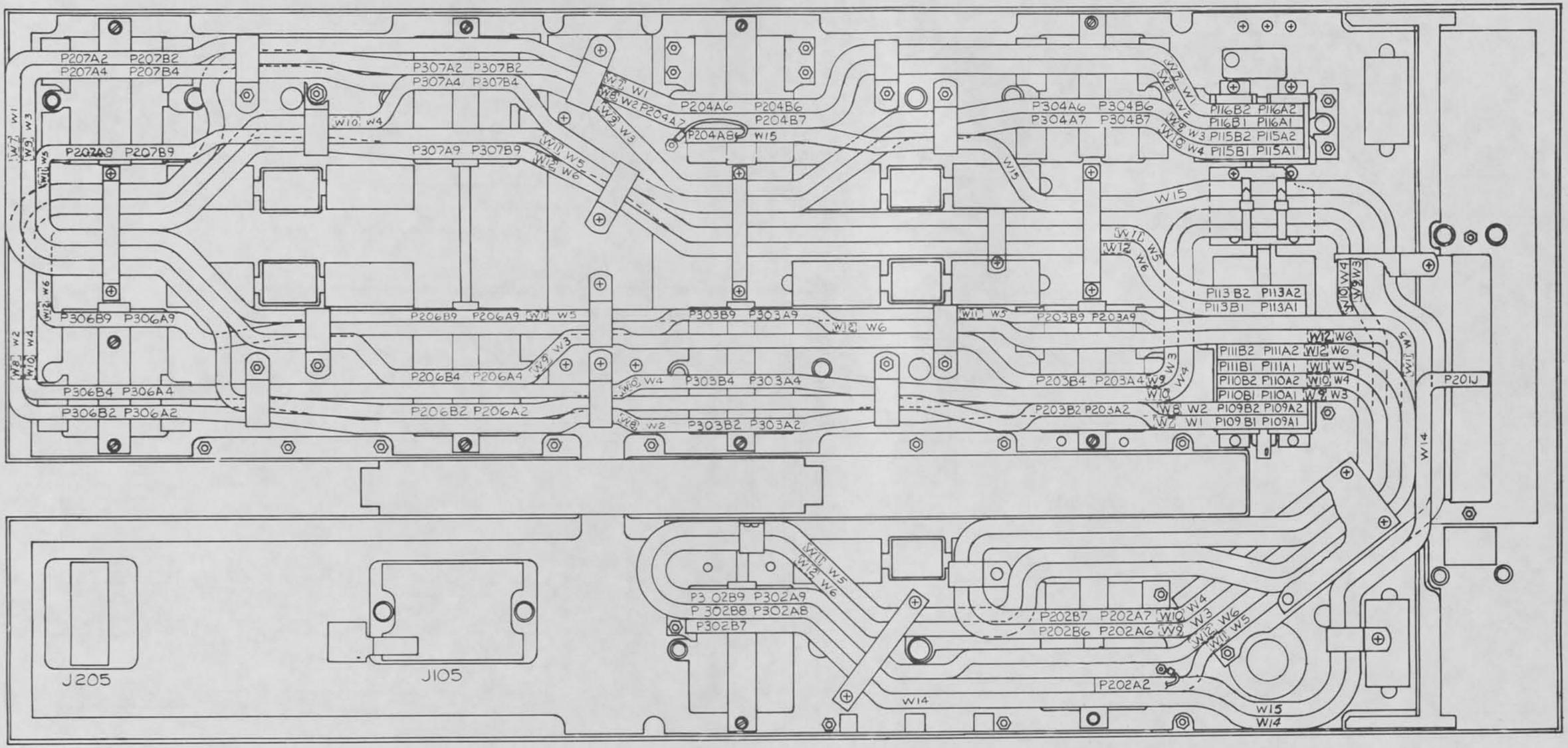

Figure 6. Computer Set, Cabling (7073448)

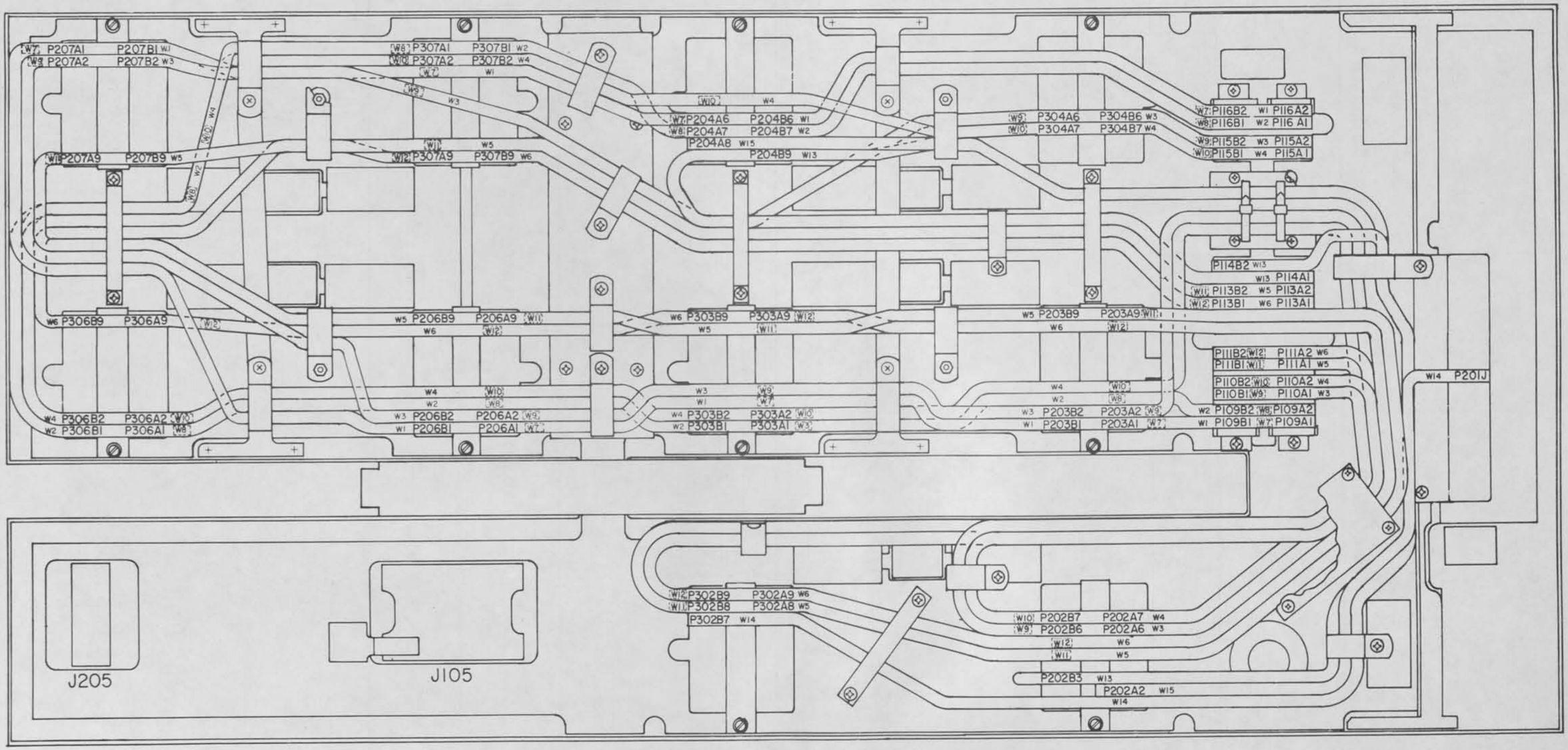

Figure 7. Computer Set, Cabling (7216357)

TABLE 1. INTER-UNIT SIGNAL CROSS-REFERENCE

FROM				TO			
SIGNAL	UNIT	SHEET	REF DES	SIGNAL	UNIT	SHEET	REF DES
CENTRAL PROCESSOR OUTPUT SIGNALS							
VOLTAGE INP SPEC IND	CP	8	CARD 36C	A4 PWR STATUS	OP	2	S9
VOLTAGE SENSOR	CP	8	CARD 36C	TURN-OFF GATE II	PS	7071725	E15
HIGH OVER TEMP (REAR)	CP	8	CARD 84B	-	OP	1	S12
HIGH OVER TEMP (FRONT)	CP	8	CARD 1B	-	OP	1	S12
BATTLE SHORT	CP	8	CARD 1B	BATTLE S.H.	OP	1	S12
LOW OVER TEMP IND (REAR)	CP	8	CARD 84B	A1 O.T.	OP	2	DS14
LOW OVER TEMP IND (FRONT)	CP	8	CARD 1B	OVERTEMP	MC	2	DS5
LOW OVER TEMP HORN	CP	8	CARD 1B	-	OP	2	LS1
AKU4 IND	CP	28	33	AKU4	MC	2	S104
AKU3 IND	CP	28	34	AKU3	MC	2	S105
AKU2 IND	CP	28	35	AKU2	MC	2	S106
AKU1 IND	CP	28	36	AKU1	MC	2	S107
$\overline{\text{KU3 IND}}$	CP	45	03	KU3	MC	2	S111
$\overline{\text{KU2 IND}}$	CP	45	26	KU2	MC	2	S113
$\overline{\text{KU4 IND}}$	CP	45	27	KU4	MC	2	S109
$\overline{\text{KL3 IND}}$	CP	45	29	KL3	MC	2	S110
$\overline{\text{KL4 IND}}$	CP	45	30	KL4	MC	2	S108
$\overline{\text{KU1 IND}}$	CP	45	32	KU1	MC	2	S115
$\overline{\text{KL1 IND}}$	CP	45	34	KL1	MC	2	S114
KL2 IND	CP	45	35	KL2	MC	2	S112
C RGTR BIT 03	CP	90	23	BIT 3	MC	1	S81
C RGTR BIT 02	CP	90	24	BIT 2	MC	1	S80
C RGTR BIT 01	CP	90	25	BIT 1	MC	1	S79
C RGTR BIT 00	CP	90	26	BIT 0	MC	1	S78
C RGTR BIT 07	CP	92	23	BIT 7	MC	1	S85
C RGTR BIT 06	CP	92	24	BIT 6	MC	1	S84
C RGTR BIT 05	CP	92	25	BIT 5	MC	1	S83
C RGTR BIT 04	CP	92	26	BIT 4	MC	1	S82
C RGTR BIT 11	CP	94	23	BIT 11	MC	1	S89
C RGTR BIT 10	CP	94	24	BIT 10	MC	1	S88
C RGTR BIT 09	CP	94	25	BIT 9	MC	1	S87
C RGTR BIT 08	CP	94	26	BIT 8	MC	1	S86
C RGTR BIT 15	CP	96	23	BIT 15	MC	1	S93
C RGTR BIT 14	CP	96	24	BIT 14	MC	1	S92
C RGTR BIT 13	CP	96	25	BIT 13	MC	1	S91
C RGTR BIT 12	CP	96	26	BIT 12	MC	1	S90
C RGTR BIT 19	CP	98	23	BIT 19	MC	1	S60
C RGTR BIT 18	CP	98	24	BIT 18	MC	1	S59
C RGTR BIT 17	CP	98	25	BIT 17	MC	1	S95
C RGTR BIT 16	CP	98	26	BIT 16	MC	1	S94
C RGTR BIT 23	CP	100	23	BIT 23	MC	1	S64
C RGTR BIT 22	CP	100	24	BIT 22	MC	1	S63
C RGTR BIT 21	CP	100	25	BIT 21	MC	1	S62

TABLE 1. INTER-UNIT SIGNAL CROSS-REFERENCE (CONT)

FROM				TO			
SIGNAL	UNIT	SHEET	REF DES	SIGNAL	UNIT	SHEET	REF DES
C RGTR BIT 20	CP	100	26	BIT 20	MC	1	S61
C RGTR BIT 27	CP	102	23	BIT 27	MC	1	S68
C RGTR BIT 26	CP	102	24	BIT 26	MC	1	S67
C RGTR BIT 25	CP	102	25	BIT 25	MC	1	S66
C RGTR BIT 24	CP	102	26	BIT 24	MC	1	S65
C RGTR BIT 31	CP	104	23	BIT 31	MC	1	S72
C RGTR BIT 30	CP	104	24	BIT 30	MC	1	S71
C RGTR BIT 29	CP	104	25	BIT 29	MC	1	S70
C RGTR BIT 28	CP	104	26	BIT 27	MC	1	S69
$\overline{\text{I BUS BIT 01}}$	CP	105	30	$\overline{\text{BIT 01 CHAN N}}$	MEM 0	31	27-34
				$\overline{\text{BIT 01 CHAN N}}$	MEM 1	31	27-34
				$\overline{\text{BIT 01 CHAN N}}$	MEM 2	31	27-34
$\overline{\text{I BUS BIT 00}}$	CP	105	31	$\overline{\text{BIT 00 CHAN N}}$	MEM 0	30	27-34
				$\overline{\text{BIT 00 CHAN N}}$	MEM 1	30	27-34
				$\overline{\text{BIT 00 CHAN N}}$	MEM 2	30	27-34
$\overline{\text{I BUS BIT 03}}$	CP	106	28	$\overline{\text{BIT 03 CHAN N}}$	MEM 0	33	27-34
				$\overline{\text{BIT 03 CHAN N}}$	MEM 1	33	27-34
				$\overline{\text{BIT 03 CHAN N}}$	MEM 2	33	27-34
$\overline{\text{I BUS BIT 02}}$	CP	106	29	$\overline{\text{BIT 02 CHAN N}}$	MEM 0	32	27-34
				$\overline{\text{BIT 02 CHAN N}}$	MEM 1	32	27-34
				$\overline{\text{BIT 02 CHAN N}}$	MEM 2	32	27-34
$\overline{\text{I BUS BIT 05}}$	CP	107	15	$\overline{\text{BIT 05 CHAN N}}$	MEM 0	35	27-34
				$\overline{\text{BIT 05 CHAN N}}$	MEM 1	35	27-34
				$\overline{\text{BIT 05 CHAN N}}$	MEM 2	35	27-34
$\overline{\text{I BUS BIT 04}}$	CP	107	16	$\overline{\text{BIT 04 CHAN N}}$	MEM 0	34	27-34
				$\overline{\text{BIT 04 CHAN N}}$	MEM 1	34	27-34
				$\overline{\text{BIT 04 CHAN N}}$	MEM 2	34	27-34
$\overline{\text{I BUS BIT 07}}$	CP	108	13	$\overline{\text{BIT 07 CHAN N}}$	MEM 0	37	27-34
				$\overline{\text{BIT 07 CHAN N}}$	MEM 1	37	27-34
				$\overline{\text{BIT 07 CHAN N}}$	MEM 2	37	27-34
$\overline{\text{I BUS BIT 06}}$	CP	108	14	$\overline{\text{BIT 06 CHAN N}}$	MEM 0	36	27-34
				$\overline{\text{BIT 06 CHAN N}}$	MEM 1	36	27-34
				$\overline{\text{BIT 06 CHAN N}}$	MEM 2	36	27-34
$\overline{\text{I BUS BIT 09}}$	CP	109	30	$\overline{\text{BIT 09 CHAN N}}$	MEM 0	39	27-34
				$\overline{\text{BIT 09 CHAN N}}$	MEM 1	39	27-34
				$\overline{\text{BIT 09 CHAN N}}$	MEM 2	39	27-34
$\overline{\text{I BUS BIT 08}}$	CP	109	31	$\overline{\text{BIT 08 CHAN N}}$	MEM 0	38	27-34
				$\overline{\text{BIT 08 CHAN N}}$	MEM 1	38	27-34
				$\overline{\text{BIT 08 CHAN N}}$	MEM 2	38	27-34
$\overline{\text{I BUS BIT 11}}$	CP	110	28	$\overline{\text{BIT 11 CHAN N}}$	MEM 0	41	27-34
				$\overline{\text{BIT 11 CHAN N}}$	MEM 1	41	27-34
				$\overline{\text{BIT 11 CHAN N}}$	MEM 2	41	27-34
$\overline{\text{I BUS BIT 10}}$	CP	110	29	$\overline{\text{BIT 10 CHAN N}}$	MEM 0	40	27-34
				$\overline{\text{BIT 10 CHAN N}}$	MEM 1	40	27-34
				$\overline{\text{BIT 10 CHAN N}}$	MEM 2	40	27-34

N Denotes any of the eight memory channels

TABLE 1. INTER-UNIT SIGNAL CROSS-REFERENCE (CONT)

FROM				TO			
SIGNAL	UNIT	SHEET	REF DES	SIGNAL	UNIT	SHEET	REF DES
$\overline{\text{I BUS BIT 13}}$	CP	111	15	$\overline{\text{BIT 13 CHAN N}}$	MEM 0	43	27-34
				$\overline{\text{BIT 13 CHAN N}}$	MEM 1	43	27-34
				$\overline{\text{BIT 13 CHAN N}}$	MEM 2	43	27-34
$\overline{\text{I BUS BIT 12}}$	CP	111	16	$\overline{\text{BIT 12 CHAN N}}$	MEM 0	42	27-34
				$\overline{\text{BIT 12 CHAN N}}$	MEM 1	42	27-34
				$\overline{\text{BIT 12 CHAN N}}$	MEM 2	42	27-34
$\overline{\text{I BUS BIT 15}}$	CP	112	13	$\overline{\text{BIT 15 CHAN N}}$	MEM 0	45	27-34
				$\overline{\text{BIT 15 CHAN N}}$	MEM 1	45	27-34
				$\overline{\text{BIT 15 CHAN N}}$	MEM 2	45	27-34
$\overline{\text{I BUS BIT 14}}$	CP	112	14	$\overline{\text{BIT 14 CHAN N}}$	MEM 0	44	27-34
				$\overline{\text{BIT 14 CHAN N}}$	MEM 1	44	27-34
				$\overline{\text{BIT 14 CHAN N}}$	MEM 2	44	27-34
$\overline{\text{0 BUS BIT 02}}$	CP	164	16	$\overline{\text{BIT 02 CHAN N}}$	MEM 0	32	27-34
				$\overline{\text{BIT 02 CHAN N}}$	MEM 1	32	27-34
				$\overline{\text{BIT 02 CHAN N}}$	MEM 2	32	27-34
$\overline{\text{0 BUS BIT 01}}$	CP	164	17	$\overline{\text{BIT 01 CHAN N}}$	MEM 0	31	27-34
				$\overline{\text{BIT 01 CHAN N}}$	MEM 1	31	27-34
				$\overline{\text{BIT 01 CHAN N}}$	MEM 2	31	27-34
$\overline{\text{0 BUS BIT 00}}$	CP	164	18	$\overline{\text{BIT 00 CHAN N}}$	MEM 0	30	27-34
				$\overline{\text{BIT 00 CHAN N}}$	MEM 1	30	27-34
				$\overline{\text{BIT 00 CHAN N}}$	MEM 2	30	27-34
$\overline{\text{0 BUS BIT 04}}$	CP	165	14	$\overline{\text{BIT 04 CHAN N}}$	MEM 0	34	27-34
				$\overline{\text{BIT 04 CHAN N}}$	MEM 1	34	27-34
				$\overline{\text{BIT 04 CHAN N}}$	MEM 2	34	27-34
$\overline{\text{0 BUS BIT 03}}$	CP	165	15	$\overline{\text{BIT 03 CHAN N}}$	MEM 0	33	27-34
				$\overline{\text{BIT 03 CHAN N}}$	MEM 1	33	27-34
				$\overline{\text{BIT 03 CHAN N}}$	MEM 2	33	27-34
$\overline{\text{0 BUS BIT 07}}$	CP	166	04	$\overline{\text{BIT 07 CHAN N}}$	MEM 0	37	27-34
				$\overline{\text{BIT 07 CHAN N}}$	MEM 1	37	27-34
				$\overline{\text{BIT 07 CHAN N}}$	MEM 2	37	27-34
$\overline{\text{0 BUS BIT 06}}$	CP	166	05	$\overline{\text{BIT 06 CHAN N}}$	MEM 0	36	27-34
				$\overline{\text{BIT 06 CHAN N}}$	MEM 1	36	27-34
				$\overline{\text{BIT 06 CHAN N}}$	MEM 2	36	27-34
$\overline{\text{0 BUS BIT 05}}$	CP	166	06	$\overline{\text{BIT 05 CHAN N}}$	MEM 0	35	27-34
				$\overline{\text{BIT 05 CHAN N}}$	MEM 1	35	27-34
				$\overline{\text{BIT 05 CHAN N}}$	MEM 2	35	27-34
$\overline{\text{0 BUS BIT 09}}$	CP	167	02	$\overline{\text{BIT 09 CHAN N}}$	MEM 0	39	27-34
				$\overline{\text{BIT 09 CHAN N}}$	MEM 1	39	27-34
				$\overline{\text{BIT 09 CHAN N}}$	MEM 2	39	27-34
$\overline{\text{0 BUS BIT 08}}$	CP	167	03	$\overline{\text{BIT 08 CHAN N}}$	MEM 0	38	27-34
				$\overline{\text{BIT 08 CHAN N}}$	MEM 1	38	27-34
				$\overline{\text{BIT 08 CHAN N}}$	MEM 2	38	27-34
$\overline{\text{0 BUS BIT 12}}$	CP	168	16	$\overline{\text{BIT 12 CHAN N}}$	MEM 0	42	27-34
				$\overline{\text{BIT 12 CHAN N}}$	MEM 1	42	27-34
				$\overline{\text{BIT 12 CHAN N}}$	MEM 2	42	27-34

N Denotes any of the eight memory channels

TABLE 1. INTER-UNIT SIGNAL CROSS-REFERENCE (CONT)

FROM				TO			
SIGNAL	UNIT	SHEET	REF DES	SIGNAL	UNIT	SHEET	REF DES
$\overline{\text{0 BUS BIT 11}}$	CP	168	17	$\overline{\text{BIT 11 CHAN N}}$	MEM 0	41	27-34
				$\overline{\text{BIT 11 CHAN N}}$	MEM 1	41	27-34
				$\overline{\text{BIT 11 CHAN N}}$	MEM 2	41	27-34
$\overline{\text{0 BUS BIT 10}}$	CP	168	18	$\overline{\text{BIT 10 CHAN N}}$	MEM 0	40	27-34
				$\overline{\text{BIT 10 CHAN N}}$	MEM 1	40	27-34
				$\overline{\text{BIT 10 CHAN N}}$	MEM 2	40	27-34
$\overline{\text{0 BUS BIT 15}}$	CP	169	03	$\overline{\text{BIT 15 CHAN N}}$	MEM 0	45	27-34
				$\overline{\text{BIT 15 CHAN N}}$	MEM 1	45	27-34
				$\overline{\text{BIT 15 CHAN N}}$	MEM 2	45	27-34
$\overline{\text{0 BUS BIT 14}}$	CP	169	05	$\overline{\text{BIT 14 CHAN N}}$	MEM 0	44	27-34
				$\overline{\text{BIT 14 CHAN N}}$	MEM 1	44	27-34
				$\overline{\text{BIT 14 CHAN N}}$	MEM 2	44	27-34
$\overline{\text{0 BUS BIT 13}}$	CP	169	06	$\overline{\text{BIT 13 CHAN N}}$	MEM 0	43	27-34
				$\overline{\text{BIT 13 CHAN N}}$	MEM 1	43	27-34
				$\overline{\text{BIT 13 CHAN N}}$	MEM 2	43	27-34
$\overline{\text{0 BUS BIT 17}}$	CP	170	02	$\overline{\text{BIT 17 CHAN N}}$	MEM 0	43	27-34
				$\overline{\text{BIT 17 CHAN N}}$	MEM 1	43	27-34
				$\overline{\text{BIT 17 CHAN N}}$	MEM 2	43	27-34
$\overline{\text{0 BUS BIT 16}}$	CP	170	04	$\overline{\text{BIT 16 CHAN N}}$	MEM 0	45	35-42
				$\overline{\text{BIT 16 CHAN N}}$	MEM 1	45	35-42
				$\overline{\text{BIT 16 CHAN N}}$	MEM 2	45	35-42
$\overline{\text{0 BUS BIT 22}}$	CP	171	16	$\overline{\text{BIT 22 CHAN N}}$	MEM 0	33	35-42
				$\overline{\text{BIT 22 CHAN N}}$	MEM 1	33	35-42
				$\overline{\text{BIT 22 CHAN N}}$	MEM 2	33	35-42
$\overline{\text{0 BUS BIT 21}}$	CP	171	17	$\overline{\text{BIT 21 CHAN N}}$	MEM 0	39	35-42
				$\overline{\text{BIT 21 CHAN N}}$	MEM 1	39	35-42
				$\overline{\text{BIT 21 CHAN N}}$	MEM 2	39	35-42
$\overline{\text{0 BUS BIT 20}}$	CP	171	18	$\overline{\text{BIT 20 CHAN N}}$	MEM 0	40	35-42
				$\overline{\text{BIT 20 CHAN N}}$	MEM 1	40	35-42
				$\overline{\text{BIT 20 CHAN N}}$	MEM 2	40	35-42
$\overline{\text{0 BUS BIT 24}}$	CP	172	14	$\overline{\text{BIT 24 CHAN N}}$	MEM 0	30	35-42
				$\overline{\text{BIT 24 CHAN N}}$	MEM 1	30	35-42
				$\overline{\text{BIT 24 CHAN N}}$	MEM 2	30	35-42
$\overline{\text{0 BUS BIT 23}}$	CP	172	15	$\overline{\text{BIT 23 CHAN N}}$	MEM 0	44	35-42
				$\overline{\text{BIT 23 CHAN N}}$	MEM 1	44	35-42
				$\overline{\text{BIT 23 CHAN N}}$	MEM 2	44	35-42
$\overline{\text{0 BUS BIT 26}}$	CP	173	05	$\overline{\text{BIT 26 CHAN N}}$	MEM 0	32	35-42
				$\overline{\text{BIT 26 CHAN N}}$	MEM 1	32	35-42
				$\overline{\text{BIT 26 CHAN N}}$	MEM 2	32	35-42
$\overline{\text{0 BUS BIT 25}}$	CP	173	06	$\overline{\text{BIT 25 CHAN N}}$	MEM 0	31	35-42
				$\overline{\text{BIT 25 CHAN N}}$	MEM 1	31	35-42
				$\overline{\text{BIT 25 CHAN N}}$	MEM 2	31	35-42
$\overline{\text{0 BUS BIT 27}}$	CP	173	04	$\overline{\text{BIT 27 CHAN N}}$	MEM 0	34	35-42
				$\overline{\text{BIT 27 CHAN N}}$	MEM 1	34	35-42
				$\overline{\text{BIT 27 CHAN N}}$	MEM 2	34	35-42

N Denotes any of the eight memory channels

TABLE 1. INTER-UNIT SIGNAL CROSS-REFERENCE (CONT)

FROM				TO			
SIGNAL	UNIT	SHEET	REF DES	SIGNAL	UNIT	SHEET	REF DES
$\overline{\text{0 BUS BIT 29}}$	CP	174	02	$\overline{\text{BIT 29 CHAN N}}$	MEM 0	36	35-42
				$\overline{\text{BIT 29 CHAN N}}$	MEM 1	36	35-42
				$\overline{\text{BIT 29 CHAN N}}$	MEM 2	36	35-42
$\overline{\text{0 BUS BIT 28}}$	CP	174	03	$\overline{\text{BIT 28 CHAN N}}$	MEM 0	35	35-42
				$\overline{\text{BIT 28 CHAN N}}$	MEM 1	35	35-42
				$\overline{\text{BIT 28 CHAN N}}$	MEM 2	35	35-42
$\overline{\text{0 BUS BIT 31}}$	CP	175	14	$\overline{\text{BIT 31 CHAN N}}$	MEM 0	38	35-42
				$\overline{\text{BIT 31 CHAN N}}$	MEM 1	38	35-42
				$\overline{\text{BIT 31 CHAN N}}$	MEM 2	38	35-42
$\overline{\text{0 BUS BIT 30}}$	CP	175	15	$\overline{\text{BIT 30 CHAN N}}$	MEM 0	37	35-42
				$\overline{\text{BIT 30 CHAN N}}$	MEM 1	37	35-42
				$\overline{\text{BIT 30 CHAN N}}$	MEM 2	37	35-42
WRITE BYTE 3	CP	176	49	CHAN N WRITE BYTE 3	MEM 0	28	01,03,05,07,09,11,13,15
				CHAN N WRITE BYTE 3	MEM 1	28	01,03,05,07,09,11,13,15
				CHAN N WRITE BYTE 3	MEM 2	28	01,03,05,07,09,11,13,15
WRITE BYTE 2	CP	176	50	CHAN N WRITE BYTE 2	MEM 0	28	17,19,21,23,25,27,29,31
				CHAN N WRITE BYTE 2	MEM 1	28	17,19,21,23,25,27,29,31
				CHAN N WRITE BYTE 2	MEM 2	28	17,19,21,23,25,27,29,31
WRITE BYTE 1	CP	176	51	CHAN N WRITE BYTE 1	MEM 0	28	02,04,06,08,10,12,14,16
				CHAN N WRITE BYTE 1	MEM 1	28	02,04,06,08,10,12,14,16
				CHAN N WRITE BYTE 1	MEM 2	28	02,04,06,08,10,12,14,16
WRITE BYTE 0	CP	176	52	CHAN N WRITE BYTE 0	MEM 0	28	18,20,22,24,26,28,30,32
				CHAN N WRITE BYTE 0	MEM 1	28	18,20,22,24,26,28,30,32
				CHAN N WRITE BYTE 0	MEM 2	28	18,20,22,24,26,28,30,32
0 BUS BIT 18	CP	176	11	$\overline{\text{BIT 18 CHAN N}}$	MEM 0	42	35-42
				$\overline{\text{BIT 18 CHAN N}}$	MEM 1	42	35-42
				$\overline{\text{BIT 18 CHAN N}}$	MEM 2	42	35-42
0 BUS BIT 19	CP	176	10	$\overline{\text{BIT 19 CHAN N}}$	MEM 0	41	35-42
				$\overline{\text{BIT 19 CHAN N}}$	MEM 1	41	35-42
				$\overline{\text{BIT 19 CHAN N}}$	MEM 2	41	35-42
IND MT 11	CP	189	37	11	MC	2	S118
IND MT 21	CP	189	38	21	MC	2	S117
IND MT 31	CP	189	39	31	MC	2	S116
$\overline{\text{ON LINE D}}$	CP	190	30	ON-LINE	MC	2	S2
				ON-LINE	OP	2	S4
$\overline{\text{IND D RGTR SEL}}$	CP	192	02	D	MC	1	S56
$\overline{\text{IND Q RGTR SEL}}$	CP	192	04	Q	MC	1	S55
$\overline{\text{IND M RGTR SEL}}$	CP	192	06	M	MC	1	S54
$\overline{\text{IND CM SEL}}$	CP	192	08	CM	MC	1	S74
$\overline{\text{IND RUN MODE}}$	CP	192	11	RUN	MC	1	S133
$\overline{\text{IND SEQ MODE}}$	CP	192	13	SEQ	MC	1	S131
$\overline{\text{IND Y RGTR SEL}}$	CP	192	16	Y	MC	1	S76
$\overline{\text{IND U RGTR SEL}}$	CP	192	18	U	MC	1	S53
$\overline{\text{IND R RGTR SEL}}$	CP	192	20	R	MC	1	S75
$\overline{\text{IND P RGTR SEL}}$	CP	192	22	P	MC	1	S73

N Denotes any of the eight memory channels

TABLE 1. INTER-UNIT SIGNAL CROSS-REFERENCE (CONT)

FROM				TO			
SIGNAL	UNIT	SHEET	REF DES	SIGNAL	UNIT	SHEET	REF DES
IND PHASE MODE	CP	192	25	PHASE	MC	1	S130
IND INST MODE	CP	192	27	INST	MC	1	S132
IND RUN	CP	194	17	RUN	MC	2	DS4
				RUN	OP	2	DS5
IND STOP 7	CP	195	04	7	MC	2	S134
IND STOP 6	CP	195	05	6	MC	2	S135
IND STOP 5	CP	195	06	5	MC	2	S136
IND STOP 4	CP	195	07	4	MC	2	S137
IND I SEQ	CP	199	29	I	MC	3	S123
IND IA SEQ	CP	199	32	IA	MC	3	S122
IND BP STOP	CP	217	31	BREAK POINT STOP	MC	2	S129
IND INTRPT	CP	219	42	INT	MC	3	S124
POWER FAULT IND	CP	221	33	PWR	MC	2	DS3
	CP	221	33	PWR FAULT	OP	2	DS4
HDW FAULT IND	CP	221	34	HDW	MC	2	DS1
	CP	221	34	HDW FAULT	OP	2	DS2
PROG FAULT IND	CP	221	35	PROGRAM	MC	2	DS2
	CP	221	35	PROG FAULT	OP	2	DS3
ADRS BIT 14	CP	226	42	SEE NOTE 3	MEM	24,25	05-08
ADRS BIT 00	CP	226	43	SEE NOTE 2	MEM	24,25	05-08
IOC REQ (0)	CP	226	40	CP 0 IOC REQ	IOC 0	34	05
IOC REQ (1)	CP	226	40	CP 1 IOC REQ	IOC 1*	34	08
IOC REQ (2)	CP	226	40	CP 2 IOC REQ	IOC 2*	34	11
IOC REQ (3)	CP	226	40	-	IOC 3*	34	-
IOC INIT (0)	CP	226	41	CP 0 IOC INIT	IOC 0	34	03
IOC INIT (1)	CP	226	41	CP 1 IOC INIT	IOC 1*	34	06
IOC INIT (2)	CP	226	41	CP 2 IOC INIT	IOC 2*	34	09
IOC INIT (3)	CP	226	41	-	IOC 3*	34	-
ADRS BIT 14	CP	226	35	SEE NOTE 3	MEM	24,25	05-08
ADRS BIT 00	CP	226	37	SEE NOTE 2	MEM	24,25	05-08
READ I	CP	228	23	CHAN N READ	MEM 0	27	03,06,09,12,15,18,21,24
				CHAN N READ	MEM 1	27	03,06,09,12,15,18,21,24
				CHAN N READ	MEM 2	27	03,06,09,12,15,18,21,24
REQ MEM BANK 14-15	CP	229	07	-	MEM 15**	-	-
				-	MEM 14**	-	-
REQ MEM BANK 12-13	CP	229	09	-	MEM 13**	-	-
				-	MEM 12**	-	-
REQ MEM BANK 10-11	CP	229	11	-	MEM 11**	-	-
				-	MEM 10**	-	-
REQ MEM BANK 8-9	CP	229	13	-	MEM 9**	-	-
				-	MEM 8**	-	-
REQ MEM BANK 6-7	CP	229	15	-	MEM 7**	-	-
				-	MEM 6**	-	-
REQ MEM BANK 4-5	CP	229	17	-	MEM 5**	-	-
				-	MEM 4**	-	-

*only one IOC is used in a basic single cabinet configuration
**only memory units 0, 1, and 2 included in single cabinet configuration
N Denotes any of the eight memory channels

TABLE 1. INTER-UNIT SIGNAL CROSS-REFERENCE (CONT)

FROM				TO			
SIGNAL	UNIT	SHEET	REF DES	SIGNAL	UNIT	SHEET	REF DES
REQ MEM BANK 2-3	CP	229	19	-	MEM 3**	-	-
				REQ CHAN 2	MEM 2	24	02
REQ MEM BANK 0-1	CP	229	21	REQ CHAN 1	MEM 1	24	03
				REQ CHAN 0	MEM 0	24	04
$\overline{\text{ADRS BIT 14}}$	CP	229	23	SEE NOTE 3	MEM	24,25	05-08
ADRS BIT 14	CP	229	24	SEE NOTE 2	MEM	24,25	05-08
$\overline{\text{ADRS BIT 0}}$	CP	229	25	SEE NOTE 3	MEM	24,25	05-08
ADRS BIT 0	CP	229	26	SEE NOTE 2	MEM	24,25	05-08
MEM WRITE 0	CP	230	33	CHAN N WRITE	MEM 0	27	02,05,08,11,14,17,20,23
				CHAN N WRITE	MEM 1	27	02,05,08,11,14,17,20,23
				CHAN N WRITE	MEM 2	27	02,05,08,11,14,17,20,23
MEM READ 0	CP	230	32	CHAN N READ	MEM 0	27	03,06,09,12,15,18,21,24
				CHAN N READ	MEM 1	27	03,06,09,12,15,18,21,24
				CHAN N READ	MEM 2	27	03,06,09,12,15,18,21,24
REQ MEM BANK 14-15	CP	231	25	-	MEM 15**	-	-
				-	MEM 14**	-	-
REQ MEM BANK 12-13	CP	231	23	-	MEM 13**	-	-
				-	MEM 12**	-	-
REQ MEM BANK 10-11	CP	231	21	-	MEM 11**	-	-
				-	MEM 10**	-	-
REQ MEM BANK 8-9	CP	231	19	-	MEM 9**	-	-
				-	MEM 8**	-	-
REQ MEM BANK 6-7	CP	231	17	-	MEM 7**	-	-
				-	MEM 6**	-	-
REQ MEM BANK 4-5	CP	231	15	-	MEM 5**	-	-
				-	MEM 4**	-	-
REQ MEM BANK 2-3	CP	231	13	-	MEM 3**	-	-
				REQ CHAN 2	MEM 2	24	02
REQ MEM BANK 0-1	CP	231	11	REQ CHAN 1	MEM 1	24	03
				REQ CHAN 0	MEM 0	24	04

MEMORY OUTPUT SIGNALS

$\overline{\text{REQUESTOR HOLD 2}}$	MEM 0	24	22	$\overline{\text{I BUS REQSTOR HOLD}}$	CP	228	05
$\overline{\text{REQUESTOR HOLD 1}}$	MEM 1	24	25	$\overline{\text{I BUS REQSTOR HOLD}}$	CP	228	05
$\overline{\text{REQUESTOR HOLD 0}}$	MEM 2	24	28	$\overline{\text{I BUS REQSTOR HOLD}}$	CP	228	05
$\overline{\text{REQUESTOR HOLD 3}}$	MEM 2	24	19	$\overline{\text{OP BUS REQSTOR HOLD}}$	CP	230	07
$\overline{\text{REQUESTOR HOLD 7}}$	MEM 0	25	19	$\overline{\text{REQSTOR HOLD}}$	IOC	31	15
	MEM 2	25	19	$\overline{\text{REQSTOR HOLD}}$	IOC	31	15
$\overline{\text{REQUESTOR HOLD 6}}$	MEM 1	25	22	$\overline{\text{REQSTOR HOLD}}$	IOC	31	15
$\overline{\text{REQUESTOR HOLD 5}}$	MEM 0	25	25	OP BUS REQSTOR HOLD	CP	230	07
$\overline{\text{REQUESTOR HOLD 4}}$	MEM 1	25	28	OP BUS REQSTOR HOLD	CP	230	07
$\overline{\text{DATA READY CH 7}}$	MEM 2	27	41	$\overline{\text{DATA READY}}$	IOC	31	14
$\overline{\text{DATA READY CH 2}}$	MEM 0	27	46	$\overline{\text{I BUS DATA READY}}$	CP	228	01
$\overline{\text{DATA READY CH 6}}$	MEM 1	27	42	$\overline{\text{DATA READY}}$	IOC	31	14
$\overline{\text{DATA READY CH 1}}$	MEM 1	27	47	$\overline{\text{I BUS DATA READY}}$	CP	228	01

**only memory units 0, 1, and 2 included in single cabinet configuration
N Denotes any of the eight memory channels

TABLE 1. INTER-UNIT SIGNAL CROSS-REFERENCE (CONT)

FROM				TO			
SIGNAL	UNIT	SHEET	REF DES	SIGNAL	UNIT	SHEET	REF DES
DATA READY CH 5	MEM 0	27	43	OP BUS DATA READY	CP	230	16
DATA READY CH 0	MEM 2	27	48	I BUS DATA READY	CP	228	01
DATA READY CH 4	MEM 1	27	44	OP BUS DATA READY	CP	230	16
DATA READY CH 3	MEM 2	27	45	OP BUS DATA READY	CP	230	16
DATA READY CH 7	MEM 0	27	41	DATA READY	IOC	31	14
LOW OVER TEMP IND (REAR)	MEM	29	S1J84C	A7 O.T., A6 O.T., A3 O.T.	OP	2	DS12,9,8
				-	OP	2	LS1
HIGH OVER TEMP IND (REAR)	MEM	29	S2J84C	-	OP	2	S12
	MEM	29	S2J84C	TURN-OFF GATE II	PS	1725	E15
LOW OVER TEMP IND (FRONT)	MEM	29	S1J01B	OVERTEMP	MC	2	DS5
	MEM	29	S1J01B	-	OP	1	S12
HIGH OVER TEMP IND (FRONT)	MEM	29	S2J01B	TURN-OFF GATE II	PS	1725	E15
IO CONTROLLER OUTPUT SIGNALS							
IND T11	IOC	7	29	11	MC	2	S41
IND T21	IOC	7	30	21	MC	2	S40
IND T31	IOC	8	31X	31	MC	2	S39
IND T41	IOC	8	32X	41	MC	2	S38
SCAN IND	IOC	12	24	SCAN	MC	2	S48
BFR IND	IOC	14	26	BUFFER	MC	2	S51
SET OUT OR EF ACK REG	IOC	29	38	SET OUTPUT OR EF ACK REQUEST	IOA	4	12
CLR OUT RGTR	IOC	29	17	CLEAR OUTPUT REGISTER	IOA	4	21
SET OUT RGTR	IOC	29	18	SET OUTPUT REGISTER	IOA	4	10
START OUT OR EF ACK	IOC	29	19	START OUTPUT ACK	IOA	4	01
START EI + IN ACK	IOC	29	20	START EI OR INP ACK	IOA	5	01
CLR ACT ⟶ ADAPTOR	IOC	29	28	CLR ACTIVE RGTR	IOA (SERIAL)	64	08
SET ACT ⟶ ADAPTOR	IOC	29	36	SET ACTIVE RGTR	IOA (SERIAL)	64	01
WRITE	IOC	31	31	CHAN N WRITE	MEM 0	27	02,05,08,11,14,17,20,23
				CHAN N WRITE	MEM 1	27	02,05,08,11,14,17,20,23
				CHAN N WRITE	MEM 2	27	02,05,08,11,14,17,20,23
READ	IOC	31	32	CHAN N READ	MEM 0	27	03,06,09,12,15,18,21,24
				CHAN N READ	MEM 1	27	03,06,09,12,15,18,21,24
				CHAN N READ	MEM 2	27	03,06,09,12,15,18,21,24
WRITE BYTE 3	IOC	32	13X	CHAN N WRITE BYTE 3	MEM 0	28	01,03,05,07,09,11,13,15
				CHAN N WRITE BYTE 3	MEM 1	28	01,03,05,07,09,11,13,15
				CHAN N WRITE BYTE 3	MEM 2	28	01,03,05,07,09,11,13,15
WRITE BYTE 2	IOC	32	14X	CHAN N WRITE BYTE 2	MEM 0	28	17,19,21,23,25,27,29,31
				CHAN N WRITE BYTE 2	MEM 1	28	17,19,21,23,25,27,29,31
				CHAN N WRITE BYTE 2	MEM 2	28	17,19,21,23,25,27,29,31
WRITE BYTE 1	IOC	32	15X	CHAN N WRITE BYTE 1	MEM 0	28	02,04,06,08,10,12,14,16
				CHAN N WRITE BYTE 1	MEM 1	28	02,04,06,08,10,12,14,16
				CHAN N WRITE BYTE 1	MEM 2	28	02,04,06,08,10,12,14,16
WRITE BYTE 0	IOC	32	16X	CHAN N WRITE BYTE 0	MEM 0	28	18,20,22,24,26,28,30,32
				CHAN N WRITE BYTE 0	MEM 1	28	18,20,22,24,26,28,30,32
				CHAN N WRITE BYTE 0	MEM 2	28	18,20,22,24,26,28,30,32

N Denotes any of the eight memory channels

TABLE 1. INTER-UNIT SIGNAL CROSS-REFERENCE (CONT)

FROM				TO			
SIGNAL	UNIT	SHEET	REF DES	SIGNAL	UNIT	SHEET	REF DES
BIT 31	IOC	32	33X	BIT 31 CHAN N	MEM 0	38	35-42
				BIT 31 CHAN N	MEM 1	38	35-42
				BIT 31 CHAN N	MEM 2	38	35-42
REQ MEM 14-15	IOC	32	04Y	-	MEM 15**	-	-
				-	MEM 14**	-	-
REQ MEM 12-13	IOC	32	05Y	-	MEM 13**	-	-
				-	MEM 12**	-	-
REQ MEM 10-11	IOC	32	06Y	-	MEM 11**	-	-
				-	MEM 10**	-	-
REQ MEM 8-9	IOC	32	07Y	-	MEM 9**	-	-
				-	MEM 8**	-	-
REQ MEM 6-7	IOC	32	08Y	-	MEM 7**	-	-
				-	MEM 6**	-	-
REQ MEM 4-5	IOC	32	09Y	-	MEM 5**	-	-
				-	MEM 4**	-	-
REQ MEM 2-3	IOC	32	10Y	-	MEM 3**	-	-
				REQ CHAN 2	MEM 2	24	02
REQ MEM 0-1	IOC	32	11Y	REQ CHAN 1	MEM 1	24	03
				REQ CHAN 0	MEM 0	24	04
ADRS 14	IOC	32	14Y	SEE NOTE 3	MEM	24,25	05-08
ADRS 14	IOC	32	15Y	SEE NOTE 3	MEM	24,25	05-08
ADRS 0	IOC	32	16Y	SEE NOTE 2	MEM	24,25	05-08
ADRS 0	IOC	32	17Y	SEE NOTE 2	MEM	24,25	05-08
CP0 REQSTOR HOLD	IOC	33	04	OP BUS REQSTOR HOLD	CP0	230	07
CP1 REQSTOR HOLD	IOC	33	05	OP BUS REQSTOR HOLD	CP1*	230	07
CP2 REQSTOR HOLD	IOC	33	06	OP BUS REQSTOR HOLD	CP2*	230	07
DATA READY ⟶ CP0 DATA READY	IOC	33	24	OP BUS DATA READY	CP0	230	16
DATA READY ⟶ CP1 DATA READY	IOC	33	25	OP BUS DATA READY	CP1*	230	16
DATA READY ⟶ CP2 DATA READY	IOC	33	26	OP BUS DATA READY	CP2*	230	16
RTC OUT	IOC	36	43	-	-	-	-
RTC OUT RTN	IOC	36	-	-	-	-	-
CLASS I INTRPT REQ ⟶ CP0	IOC	37	19	CLASS I INTRPT 10	CP0	224	05
CLASS I INTRPT REQ ⟶ CP1	IOC	37	20	CLASS I INTRPT 10	CP1*	224	05
CLASS I INTRPT REQ ⟶ CP2	IOC	37	21	CLASS I INTRPT 10	CP2*	224	05
CLASS III INTRPT REQ ⟶ CP0	IOC	39	40	CLASS III INTRPT 10	CP0	225	05
CLASS III INTRPT REQ ⟶ CP1	IOC	39	41	CLASS III INTRPT 10	CP1*	225	05
CLASS III INTRPT REQ ⟶ CP2	IOC	39	42	CLASS III INTRPT 10	CP2*	225	05
VOLTAGE INP SPEC IND	IOC	53	CARD 36C	A2 PWR STATUS	OP	2	S11
VOLTAGE SENSOR	IOC	53	CARD 36C	TURN OFF GATE II	PS	1725	E15
BATTLE SHORT	IOC	53	CARDS 1B,84B	BATTLE S.H.	OP	2	DS1
HIGH OVER TEMP (FRONT)	IOC	53	CARD 84B	-	OP	1	S12
HIGH OVER TEMP (REAR)	IOC	53	CARD 1B	-	OP	1	S12
LOW OVER TEMP IND (FRONT)	IOC	53	CARD 84B	OVERTEMP	MC	2	DS5
LOW OVER TEMP IND (REAR)	IOC	53	CARD 1B	A2 O.T.	OP	1	DS13
LOW OVER TEMP HORN	IOC	53	CARD 1B	-	OP	2	LS1

*only one CP is used in a basic single cabinet configuration
**only memory units 0, 1, and 2 included in single cabinet configuration
N Denotes any of the eight memory channels

TABLE 1. INTER-UNIT SIGNAL CROSS-REFERENCE (CONT)

FROM				TO			
SIGNAL	UNIT	SHEET	REF DES	SIGNAL	UNIT	SHEET	REF DES
GP 0 CHAN 3 E1 ACT	IOC	60	04X	GP 0 CHAN 3 EI ACT	IOA (PARALLEL)	16	10
GP 0 CHAN 3 E1 ENBL	IOC	60	05X	GP 0 CHAN 3 E1 ENBL	IOA (PARALLEL)	16	02
GP 0 CHAN 2 E1 ACT	IOC	60	07X	GP 0 CHAN 2 E1 ACT	IOA (PARALLEL)	16	09
GP 0 CHAN 2 E1 ENBL	IOC	60	08X	GP 0 CHAN 2 E1 ENBL	IOA (PARALLEL)	16	01
GP 0 CHAN 1 E1 ACT	IOC	60	10X	GP 0 CHAN 1 E1 ACT	IOA (PARALLEL)	15	10
GP 0 CHAN 1 E1 ENBL	IOC	60	11X	GP 0 CHAN 1 E1 ENBL	IOA (PARALLEL)	15	02
GP 0 CHAN 0 E1 ACT	IOC	60	13X	GP 0 CHAN 0 E1 ACT	IOA (PARALLEL)	15	09
GP 0 CHAN 0 E1 ENBL	IOC	60	14X	GP 0 CHAN 0 E1 ENBL	IOA (PARALLEL)	15	01
GP 1 CHAN 3 E1 ACT	IOC	60	04X	GP 1 CHAN 3 E1 ACT	IOA (PARALLEL)	33	10
GP 1 CHAN 3 E1 ENBL	IOC	60	05X	GP 1 CHAN 3 E1 ENBL	IOA (PARALLEL)	33	02
GP 1 CHAN 2 E1 ACT	IOC	60	07X	GP 1 CHAN 2 E1 ACT	IOA (PARALLEL)	33	09
GP 1 CHAN 2 E1 ENBL	IOC	60	08X	GP 1 CHAN 2 E1 ENBL	IOA (PARALLEL)	33	01
GP 1 CHAN 1 E1 ACT	IOC	60	10X	GP 1 CHAN 1 E1 ACT	IOA (PARALLEL)	32	10
GP 1 CHAN 1 E1 ENBL	IOC	60	11X	GP 1 CHAN 1 E1 ENBL	IOA (PARALLEL)	32	02
GP 1 CHAN 0 E1 ACT	IOC	60	13X	GP 1 CHAN 0 E1 ACT	IOA (PARALLEL)	32	09
GP 1 CHAN 0 E1 ENBL	IOC	60	14X	GP 1 CHAN 0 E1 ENBL	IOA (PARALLEL)	32	01
GP 2 CHAN 3 E1 ACT	IOC	61	04X	GP 2 CHAN 3 E1 ACT	IOA (PARALLEL)	50	10
GP 2 CHAN 3 E1 ENBL	IOC	61	05X	GP 2 CHAN 3 E1 ENBL	IOA (PARALLEL)	50	02
GP 2 CHAN 2 E1 ACT	IOC	61	07X	GP 2 CHAN 2 E1 ACT	IOA (PARALLEL)	50	09
GP 2 CHAN 2 E1 ENBL	IOC	61	08X	GP 2 CHAN 2 E1 ENBL	IOA (PARALLEL)	50	01
GP 2 CHAN 1 E1 ACT	IOC	61	10X	GP 2 CHAN 1 E1 ACT	IOA (PARALLEL)	49	10
GP 2 CHAN 1 E1 ENBL	IOC	61	11X	GP 2 CHAN 1 E1 ENBL	IOA (PARALLEL)	49	02
GP 2 CHAN 0 E1 ACT	IOC	61	13X	GP 2 CHAN 0 E1 ACT	IOA (PARALLEL)	49	09
GP 2 CHAN 0 E1 ENBL	IOC	61	14X	GP 2 CHAN 0 E1 ENBL	IOA (PARALLEL)	49	01
GP 3 CHAN 3 E1 ACT	IOC	61	04Y	GP 3 CHAN 3 E1 ACT	IOA (PARALLEL)	67	10
GP 3 CHAN 3 E1 ENBL	IOC	61	05Y	GP 3 CHAN 3 E1 ENBL	IOA (PARALLEL)	67	02
GP 3 CHAN 2 E1 ACT	IOC	61	07Y	GP 3 CHAN 2 E1 ACT	IOA (PARALLEL)	67	09
GP 3 CHAN 2 E1 ENBL	IOC	61	08Y	GP 3 CHAN 2 E1 ENBL	IOA (PARALLEL)	67	01
GP 3 CHAN 1 E1 ACT	IOC	61	10Y	GP 3 CHAN 1 E1 ACT	IOA (PARALLEL)	66	10
GP 3 CHAN 1 E1 ENBL	IOC	61	11Y	GP 3 CHAN 1 E1 ENBL	IOA (PARALLEL)	66	02
GP 3 CHAN 0 E1 ACT	IOC	61	13Y	GP 3 CHAN 0 E1 ACT	IOA (PARALLEL)	66	09
GP 3 CHAN 0 E1 ENBL	IOC	61	14Y	GP 3 CHAN 0 E1 ENBL	IOA (PARALLEL)	66	01
CHAN 2 BFR EN	IOC	74	21	CHAN 2 BFR ENBL	IOA (PARALLEL)	5	07
				CHAN 2 BFR ENBL	IOA (PARALLEL)	22	07
				CHAN 2 BFR ENBL	IOA (PARALLEL)	39	07
				CHAN 2 BFR ENBL	IOA (PARALLEL)	56	07
CHAN 1 BFR EN	IOC	74	22	CHAN 1 BFR ENBL	IOA (PARALLEL)	5	06
				CHAN 1 BFR ENBL	IOA (PARALLEL)	22	06
				CHAN 1 BFR ENBL	IOA (PARALLEL)	39	06
				CHAN 1 BFR ENBL	IOA (PARALLEL)	56	06
CHAN 0 BFR EN	IOC	74	23	CHAN 0 BFR ENBL	IOA (PARALLEL)	5	05
				CHAN 0 BFR ENBL	IOA (PARALLEL)	22	05
				CHAN 0 BFR ENBL	IOA (PARALLEL)	39	05
				CHAN 0 BFR ENBL	IOA (PARALLEL)	56	05

TABLE 1. INTER-UNIT SIGNAL CROSS-REFERENCE (CONT)

FROM				TO			
SIGNAL	UNIT	SHEET	REF DES	SIGNAL	UNIT	SHEET	REF DES
CHAN 3 BFR EN	IOC	75	20Y	CHAN 3 BFR ENBL	IOA (PARALLEL)	5	08
				CHAN 3 BFR ENBL	IOA (PARALLEL)	22	08
				CHAN 3 BFR ENBL	IOA (PARALLEL)	39	08
				CHAN 3 BFR ENBL	IOA (PARALLEL)	56	08
GP 1 BFR EN	IOC	75	22	GROUP 1 BUFFER ENABLE	IOA (PARALLEL)	21	03
				GROUP 1 BUFFER ENABLE	IOA (PARALLEL)	22	13
GP 0 BFR EN	IOC	75	23	GROUP 0 BUFFER ENABLE	IOA (PARALLEL)	4	03
				GROUP 0 BUFFER ENABLE	IOA (PARALLEL)	5	13
$\overline{\text{EI BFR EN}}$	IOC	77	20	$\overline{\text{EI BFR ENBL}}$	IOA (PARALLEL)	5	02
				$\overline{\text{EI BFR ENBL}}$	IOA (PARALLEL)	22	02
				$\overline{\text{EI BFR ENBL}}$	IOA (PARALLEL)	39	02
				$\overline{\text{EI BFR ENBL}}$	IOA (PARALLEL)	56	02
$\overline{\text{EF BFR EN}}$	IOC	77	21	$\overline{\text{EF BFR ENBL}}$	IOA (PARALLEL)	4	04
				$\overline{\text{EF BFR ENBL}}$	IOA (PARALLEL)	21	04
				$\overline{\text{EF BFR ENBL}}$	IOA (PARALLEL)	38	04
				$\overline{\text{EF BFR ENBL}}$	IOA (PARALLEL)	55	04
OUT BFR EN	IOC	77	22	OUTPUT BUFFER ENBL	IOA (PARALLEL)	4	05
				OUTPUT BUFFER ENBL	IOA (PARALLEL)	21	05
				OUTPUT BUFFER ENBL	IOA (PARALLEL)	38	05
				OUTPUT BUFFER ENBL	IOA (PARALLEL)	55	05
$\overline{\text{IN BFR EN}}$	IOC	76	23Y	$\overline{\text{INP BFR ENBL}}$	IOA (PARALLEL)	5	02
				$\overline{\text{INP BFR ENBL}}$	IOA (PARALLEL)	22	02
				$\overline{\text{INP BFR ENBL}}$	IOA (PARALLEL)	39	02
				$\overline{\text{INP BFR ENBL}}$	IOA (PARALLEL)	56	02
GP 3 BFR EN	IOC	76	20	GROUP 3 BUFFER ENABLE	IOA (PARALLEL)	55	03
				GP 3 BFR ENBL	IOA (PARALLEL)	56	13
GP 2 BFR EN	IOC	76	21	GROUP 2 BUFFER ENABLE	IOA (PARALLEL)	38	03
				GP 2 BFR ENBL	IOA (PARALLEL)	39	13
$\overline{\text{BIT 00}}$	IOC	114	26	$\overline{\text{BIT 00 CHAN N}}$	MEM 0	30	27-34
				$\overline{\text{BIT 00 CHAN N}}$	MEM 1	30	27-34
				$\overline{\text{BIT 00 CHAN N}}$	MEM 2	30	27-34
$\overline{\text{BIT 01}}$	IOC	114	25	$\overline{\text{BIT 01 CHAN N}}$	MEM 0	31	27-34
				$\overline{\text{BIT 01 CHAN N}}$	MEM 1	31	27-34
				$\overline{\text{BIT 01 CHAN N}}$	MEM 2	31	27-34
$\overline{\text{BIT 02}}$	IOC	114	24	$\overline{\text{BIT 02 CHAN N}}$	MEM 0	32	27-34
				$\overline{\text{BIT 02 CHAN N}}$	MEM 1	32	27-34
				$\overline{\text{BIT 02 CHAN N}}$	MEM 2	32	27-34
$\overline{\text{BIT 03}}$	IOC	114	18	$\overline{\text{BIT 03 CHAN N}}$	MEM 0	33	27-34
				$\overline{\text{BIT 03 CHAN N}}$	MEM 1	33	27-34
				$\overline{\text{BIT 03 CHAN N}}$	MEM 2	33	27-34
$\overline{\text{BIT 04}}$	IOC	114	17	$\overline{\text{BIT 04 CHAN N}}$	MEM 0	34	27-34
				$\overline{\text{BIT 04 CHAN N}}$	MEM 1	34	27-34
				$\overline{\text{BIT 04 CHAN N}}$	MEM 2	34	27-34
$\overline{\text{BIT 05}}$	IOC	114	16	$\overline{\text{BIT 05 CHAN N}}$	MEM 0	35	27-34
				$\overline{\text{BIT 05 CHAN N}}$	MEM 1	35	27-34
				$\overline{\text{BIT 05 CHAN N}}$	MEM 2	35	27-34

N Denotes any of the eight memory channels

TABLE 1. INTER-UNIT SIGNAL CROSS-REFERENCE (CONT)

FROM				TO			
SIGNAL	UNIT	SHEET	REF DES	SIGNAL	UNIT	SHEET	REF DES
BIT 06	IOC	115	10X	BIT 06 CHAN N	MEM 0	36	27-34
				BIT 06 CHAN N	MEM 1	36	27-34
				BIT 06 CHAN N	MEM 2	36	27-34
BIT 07	IOC	115	9X	BIT 07 CHAN N	MEM 0	37	27-34
				BIT 07 CHAN N	MEM 1	37	27-34
				BIT 07 CHAN N	MEM 2	37	27-34
BIT 08	IOC	115	8X	BIT 08 CHAN N	MEM 0	38	27-34
				BIT 08 CHAN N	MEM 1	38	27-34
				BIT 08 CHAN N	MEM 2	38	27-34
BIT 09	IOC	115	26Y	BIT 09 CHAN N	MEM 0	39	27-34
				BIT 09 CHAN N	MEM 1	39	27-34
				BIT 09 CHAN N	MEM 2	39	27-34
BIT 10	IOC	115	25Y	BIT 10 CHAN N	MEM 0	40	27-34
				BIT 10 CHAN N	MEM 1	40	27-34
				BIT 10 CHAN N	MEM 2	40	27-34
BIT 11	IOC	115	24Y	BIT 11 CHAN N	MEM 0	41	27-34
				BIT 11 CHAN N	MEM 1	41	27-34
				BIT 11 CHAN N	MEM 2	41	27-34
BIT 12	IOC	116	18	BIT 12 CHAN N	MEM 0	42	27-34
				BIT 12 CHAN N	MEM 1	42	27-34
				BIT 12 CHAN N	MEM 2	42	27-34
BIT 13	IOC	116	17	BIT 13 CHAN N	MEM 0	43	27-34
				BIT 13 CHAN N	MEM 1	43	27-34
				BIT 13 CHAN N	MEM 2	43	27-34
BIT 14	IOC	116	16	BIT 14 CHAN N	MEM 0	44	27-34
				BIT 14 CHAN N	MEM 1	44	27-34
				BIT 14 CHAN N	MEM 2	44	27-34
BIT 15	IOC	116	10	BIT 15 CHAN N	MEM 0	45	27-34
				BIT 15 CHAN N	MEM 1	45	27-34
				BIT 15 CHAN N	MEM 2	45	27-34
BIT 16	IOC	116	9	BIT 16 CHAN N	MEM 0	45	35-42
				BIT 16 CHAN N	MEM 1	45	35-42
				BIT 16 CHAN N	MEM 2	45	35-42
BIT 17	IOC	116	8	BIT 17 CHAN N	MEM 0	43	35-42
				BIT 17 CHAN N	MEM 1	43	35-42
				BIT 17 CHAN N	MEM 2	43	35-42
GP 1 OUT + EF ACK	IOC	196	28	START OUTPUT OR EF ACK	IOA (PARALLEL)	21	01
GP 0 OUT + EF ACK	IOC	196	29	START OUTPUT OR EF ACK	IOA (PARALLEL)	4	01
GP 3 OUT + EF ACK	IOC	197	08	START OUTPUT OR EF ACK	IOA (PARALLEL)	55	01
GP 2 OUT + EF ACK	IOC	197	09	START OUTPUT OR EF ACK	IOA (PARALLEL)	38	01
PARALLEL I/O ADAPTER OUTPUT SIGNALS							
GP 0 OUT + EF ACK	IOA	4	57	GP 0 OUT + EF ACK	IOC	199	51
GP 0 OUT REG AVAIL	IOA	4	23	GP 0 OUT REG AVAIL	IOC	59	06

N Denotes any of the eight memory channels

TABLE 1. INTER-UNIT SIGNAL CROSS-REFERENCE (CONT)

FROM				TO			
SIGNAL	UNIT	SHEET	REF DES	SIGNAL	UNIT	SHEET	REF DES
GP 0 CHAN 0 IN AVAIL	IOA	5	49	$\overline{\text{GP 0 CHAN 0 INP AVAIL}}$	IOC	60	19X
GP 0 CHAN 1 IN AVAIL	IOA	5	51	$\overline{\text{GP 0 CHAN 1 INP AVAIL}}$	IOC	60	18X
GP 0 CHAN 2 IN AVAIL	IOA	5	53	$\overline{\text{GP 0 CHAN 2 INP AVAIL}}$	IOC	60	17X
GP 0 CHAN 3 IN AVAIL	IOA	5	55	$\overline{\text{GP 0 CHAN 3 INP AVAIL}}$	IOC	60	16X
GP 0 CHAN 0 IN REQ	IOA	6	33	GP 0 CHAN 0 INP REQ	IOC	176	53
GP 0 CHAN 1 IN REQ	IOA	6	37	GP 0 CHAN 1 INP REQ	IOC	177	53
GP 0 CHAN 2 IN REQ	IOA	6	41	GP 0 CHAN 2 INP REQ	IOC	178	53
GP 0 CHAN 3 IN REQ	IOA	6	45	GP 0 CHAN 3 INP REQ	IOC	179	53
GP 0 CHAN 0 EF REQ	IOA	6	35	GP 0 CHAN 0 EF REQ	IOC	134	17
GP 0 CHAN 1 EF REQ	IOA	6	39	GP 0 CHAN 1 EF REQ	IOC	135	17
GP 0 CHAN 2 EF REQ	IOA	6	43	GP 0 CHAN 2 EF REQ	IOC	136	17
GP 0 CHAN 3 EF REQ	IOA	6	47	GP 0 CHAN 3 EF REQ	IOC	137	17
GP 0 CHAN 0 EI REQ	IOA	6	36	GP 0 CHAN 0 EI REQ	IOC	176	54
GP 0 CHAN 1 EI REQ	IOA	6	40	GP 0 CHAN 1 EI REQ	IOC	177	54
GP 0 CHAN 2 EI REQ	IOA	6	44	GP 0 CHAN 2 EI REQ	IOC	178	54
GP 0 CHAN 3 EI REQ	IOA	6	48	GP 0 CHAN 3 EI REQ	IOC	179	54
GP 0 CHAN 0 OUT REQ	IOA	6	34	OUT REQ	IOC	199	49
GP 0 CHAN 1 OUT REQ	IOA	6	38	OUT REQ	IOC	199	44
GP 0 CHAN 2 OUT REQ	IOA	6	42	OUT REQ	IOC	199	39
GP 0 CHAN 3 OUT REQ	IOA	6	46	OUT REQ	IOC	199	34
DATA BIT 0	IOA	7	21	ADPTR BIT 0	IOC	62	24X
DATA BIT 1	IOA	7	22	ADPTR BIT 1	IOC	62	23X
DATA BIT 2	IOA	7	23	ADPTR BIT 2	IOC	62	22X
DATA BIT 3	IOA	7	24	ADPTR BIT 3	IOC	62	21X
DATA BIT 4	IOA	8	21	ADPTR BIT 4	IOC	62	24Y
DATA BIT 5	IOA	8	22	ADPTR BIT 5	IOC	62	23Y
DATA BIT 6	IOA	8	23	ADPTR BIT 6	IOC	62	22Y
DATA BIT 7	IOA	8	24	ADPTR BIT 7	IOC	62	21Y
DATA BIT 8	IOA	9	21	ADPTR BIT 8	IOC	65	40X
DATA BIT 9	IOA	9	22	ADPTR BIT 9	IOC	65	34X
DATA BIT 10	IOA	9	23	ADPTR BIT 10	IOC	65	30X
DATA BIT 11	IOA	9	24	ADPTR BIT 11	IOC	65	26X
DATA BIT 12	IOA	10	21	ADPTR BIT 12	IOC	67	-
DATA BIT 13	IOA	10	22	ADPTR BIT 13	IOC	67	-
DATA BIT 14	IOA	10	23	ADPTR BIT 14	IOC	67	-
DATA BIT 15	IOA	10	24	ADPTR BIT 15	IOC	67	-
DATA BIT 16	IOA	11	21	ADPTR BIT 16	IOC	63	-
DATA BIT 17	IOA	11	22	ADPTR BIT 17	IOC	63	-
DATA BIT 18	IOA	11	23	ADPTR BIT 18	IOC	63	-
DATA BIT 19	IOA	11	24	ADPTR BIT 19	IOC	63	-
DATA BIT 20	IOA	12	21	ADPTR BIT 20	IOC	64	-
DATA BIT 21	IOA	12	22	ADPTR BIT 21	IOC	64	-
DATA BIT 22	IOA	12	23	ADPTR BIT 22	IOC	64	-
DATA BIT 23	IOA	12	24	ADPTR BIT 23	IOC	64	-
DATA BIT 24	IOA	13	21	ADPTR BIT 24	IOC	66	-

TABLE 1. INTER-UNIT SIGNAL CROSS-REFERENCE (CONT)

FROM				TO			
SIGNAL	UNIT	SHEET	REF DES	SIGNAL	UNIT	SHEET	REF DES
DATA BIT 25	IOA	13	22	ADPTR BIT 25	IOC	66	-
DATA BIT 26	IOA	13	23	ADPTR BIT 26	IOC	66	-
DATA BIT 27	IOA	13	24	ADPTR BIT 27	IOC	66	-
DATA BIT 28	IOA	14	27	ADPTR BIT 28	IOC	73	-
DATA BIT 29	IOA	14	28	ADPTR BIT 29	IOC	73	-
DATA BIT 30	IOA	14	21	ADPTR BIT 30	IOC	73	-
DATA BIT 31	IOA	14	22	ADPTR BIT 31	IOC	73	-
CH 0 EXT INTRPT ENBL	IOA	15	31				J41-04
CH 0 EXT INTRPT ENBL RTN	IOA	15	-				J41-09
CH 1 EXT INTRPT ENBL	IOA	15	32				J49-04
CH 1 EXT INTRPT ENBL RTN	IOA	15	-				J49-09
CHAN 0 INP ACK	IOA	15	25				J41-02
CHAN 0 INP ACK RTN	IOA	15	-				J41-07
CHAN 0 OUT ACK	IOA	15	26				J42-01
CHAN 0 OUT ACK RTN	IOA	15	-				J42-06
CHAN 0 EF ACK	IOA	15	27				J42-03
CHAN 0 EF ACK RTN	IOA	15	-				J42-08
CHAN 1 INP ACK	IOA	15	28				J49-02
CHAN 1 INP ACK RTN	IOA	15	-				J49-07
CHAN 1 OUT ACK	IOA	15	29				J50-01
CHAN 1 OUT ACK RTN	IOA	15	-				J50-06
CHAN 1 EF ACK	IOA	15	30				J50-03
CHAN 1 EF ACK RTN	IOA	15	-				J50-08
CH 2 EXT INTRPT ENBL	IOA	16	31				J57-04
CH 2 EXT INTRPT ENBL RTN	IOA	16	-				J57-09
CH 3 EXT INTRPT ENBL	IOA	16	32				J65-04
CH 3 EXT INTRPT ENBL RTN	IOA	16	-				J65-09
CHAN 2 INP ACK	IOA	16	25				J57-02
CHAN 2 INP ACK RTN	IOA	16	-				J57-01
CHAN 2 OUT ACK	IOA	16	26				J58-01
CHAN 2 OUT ACK RTN	IOA	16	-				J58-06
CHAN 2 EF ACK	IOA	16	27				J58-03
CHAN 2 EF ACK RTN	IOA	16	-				J58-08
CHAN 3 INP ACK	IOA	16	28				J65-02
CHAN 3 INP ACK RTN	IOA	16	-				J65-07
CHAN 3 OUT ACK	IOA	16	29				J66-01
CHAN 3 OUT ACK RTN	IOA	16	-				J66-06
CHAN 3 EF ACK	IOA	16	30				J66-03
CHAN 3 EF ACK RTN	IOA	16	-				J66-08
GP 0 OUT DATA BIT 0	IOA	17	33				J42-13
GP 0 OUT DATA BIT 0 RTN	IOA	17	-				J42-21
GP 0 OUT DATA BIT 1	IOA	17	34				J42-14
GP 0 OUT DATA BIT 1 RTN	IOA	17	-				J42-22
GP 0 OUT DATA BIT 2	IOA	17	35				J42-15
GP 0 OUT DATA BIT 2 RTN	IOA	17	-				J42-23
GP 0 OUT DATA BIT 3	IOA	17	36				J42-16
GP 0 OUT DATA BIT 3 RTN	IOA	17	-				J42-24
GP 0 OUT DATA BIT 4	IOA	17	37				J42-17

TABLE 1. INTER-UNIT SIGNAL CROSS-REFERENCE (CONT)

FROM				TO			
SIGNAL	UNIT	SHEET	REF DES	SIGNAL	UNIT	SHEET	REF DES
GP 0 OUT DATA BIT 4 RTN	IOA	17	-				J42-25
GP 0 OUT DATA BIT 5	IOA	17	38				J42-18
GP 0 OUT DATA BIT 5 RTN	IOA	17	-				J42-26
GP 0 OUT DATA BIT 6	IOA	17	39				J42-27
GP 0 OUT DATA BIT 6 RTN	IOA	17	-				J42-37
GP 0 OUT DATA BIT 7	IOA	17	40				J42-30
GP 0 OUT DATA BIT 7 RTN	IOA	17	-				J42-40
GP 0 OUT DATA BIT 8	IOA	18	33				J42-31
GP 0 OUT DATA BIT 8 RTN	IOA	18	-				J42-41
GP 0 OUT DATA BIT 9	IOA	18	34				J42-32
GP 0 OUT DATA BIT 9 RTN	IOA	18	-				J42-42
GP 0 OUT DATA BIT 10	IOA	18	35				J42-33
GP 0 OUT DATA BIT 10 RTN	IOA	18	-				J42-43
GP 0 OUT DATA BIT 11	IOA	18	36				J42-34
GP 0 OUT DATA BIT 11 RTN	IOA	18	-				J42-44
GP 0 OUT DATA BIT 12	IOA	18	37				J42-35
GP 0 OUT DATA BIT 12 RTN	IOA	18	-				J42-45
GP 0 OUT DATA BIT 13	IOA	18	38				J42-36
GP 0 OUT DATA BIT 13 RTN	IOA	18	-				J42-46
GP 0 OUT DATA BIT 14	IOA	18	39				J42-37
GP 0 OUT DATA BIT 14 RTN	IOA	18	-				J42-47
GP 0 OUT DATA BIT 15	IOA	18	40				J42-49
GP 0 OUT DATA BIT 15 RTN	IOA	18	-				J42-58
GP 0 OUT DATA BIT 16	IOA	19	33				J42-50
GP 0 OUT DATA BIT 16 RTN	IOA	19	-				J42-59
GP 0 OUT DATA BIT 17	IOA	19	34				J42-51
GP 0 OUT DATA BIT 17 RTN	IOA	19	-				J42-60
GP 0 OUT DATA BIT 18	IOA	19	35				J42-52
GP 0 OUT DATA BIT 18 RTN	IOA	19	-				J42-61
GP 0 OUT DATA BIT 19	IOA	19	36				J42-53
GP 0 OUT DATA BIT 19 RTN	IOA	19	-				J42-62
GP 0 OUT DATA BIT 20	IOA	19	37				J42-54
GP 0 OUT DATA BIT 20 RTN	IOA	19	-				J42-63
GP 0 OUT DATA BIT 21	IOA	19	38				J42-55
GP 0 OUT DATA BIT 21 RTN	IOA	19	-				J42-64
GP 0 OUT DATA BIT 22	IOA	19	39				J42-56
GP 0 OUT DATA BIT 22 RTN	IOA	19	-				J42-65
GP 0 OUT DATA BIT 23	IOA	19	40				J42-57
GP 0 OUT DATA BIT 23 RTN	IOA	19	-				J42-66
GP 0 OUT DATA BIT 24	IOA	20	33				J42-67
GP 0 OUT DATA BIT 24 RTN	IOA	20	-				J42-75
GP 0 OUT DATA BIT 25	IOA	20	34				J42-68
GP 0 OUT DATA BIT 25 RTN	IOA	20	-				J42-76
GP 0 OUT DATA BIT 26	IOA	20	35				J42-69
GP 0 OUT DATA BIT 26 RTN	IOA	20	-				J42-77
GP 0 OUT DATA BIT 27	IOA	20	36				J42-70
GP 0 OUT DATA BIT 27 RTN	IOA	20	-				J42-78

TABLE 1. INTER-UNIT SIGNAL CROSS-REFERENCE (CONT)

FROM				TO			
SIGNAL	UNIT	SHEET	REF DES	SIGNAL	UNIT	SHEET	REF DES
GP 0 OUT DATA BIT 28	IOA	20	37				J42-71
GP 0 OUT DATA BIT 28 RTN	IOA	20	-				J42-79
GP 0 OUT DATA BIT 29	IOA	20	38				J42-72
GP 0 OUT DATA BIT 29 RTN	IOA	20	-				J42-80
GP 0 OUT DATA BIT 30	IOA	20	39				J42-73
GP 0 OUT DATA BIT 30 RTN	IOA	20	-				J42-81
GP 0 OUT DATA BIT 31	IOA	20	40				J42-07
GP 0 OUT DATA BIT 31 RTN	IOA	20	-				J42-12
GP 1 OUT + EF ACK	IOA	21	57	GP 1 OUT + EF ACK	IOC	199	25
GP 1 OUT REG AVAIL	IOA	21	23	GP 1 OUT REG AVAIL	IOC	59	05
GP 1 CHAN 0 IN AVAIL	IOA	22	49	GP 1 CHAN 0 INP AVAIL	IOC	60	23Y
GP 1 CHAN 1 IN AVAIL	IOA	22	51	GP 1 CHAN 1 INP AVAIL	IOC	60	22Y
GP 1 CHAN 2 IN AVAIL	IOA	22	53	GP 1 CHAN 2 INP AVAIL	IOC	60	21Y
GP 1 CHAN 3 IN AVAIL	IOA	22	55	GP 1 CHAN 3 INP AVAIL	IOC	60	20Y
GP 1 CHAN 0 IN REQ	IOA	23	33	GP 1 CHAN 0 INP REQ	IOC	180	50
GP 1 CHAN 1 IN REQ	IOA	23	37	GP 1 CHAN 1 INP REQ	IOC	181	50
GP 1 CHAN 2 IN REQ	IOA	23	41	GP 1 CHAN 2 INP REQ	IOC	182	50
GP 1 CHAN 3 IN REQ	IOA	23	45	GP 1 CHAN 3 INP REQ	IOC	183	50
GP 1 CHAN 0 EF REQ	IOA	23	35	GP 1 CHAN 0 EF REQ	IOC	138	17
GP 1 CHAN 1 EF REQ	IOA	23	39	GP 1 CHAN 1 EF REQ	IOC	139	17
GP 1 CHAN 2 EF REQ	IOA	23	43	GP 1 CHAN 2 EF REQ	IOC	140	17
GP 1 CHAN 3 EF REQ	IOA	23	47	GP 1 CHAN 3 EF REQ	IOC	141	17
GP 1 CHAN 0 EI REQ	IOA	23	36	GP 1 CHAN 0 EI REQ	IOC	180	51
GP 1 CHAN 1 EI REQ	IOA	23	40	GP 1 CHAN 1 EI REQ	IOC	181	51
GP 1 CHAN 2 EI REQ	IOA	23	44	GP 1 CHAN 2 EI REQ	IOC	182	51
GP 1 CHAN 3 EI REQ	IOA	23	48	GP 1 CHAN 3 EI REQ	IOC	183	51
GP 1 CHAN 0 OUT REQ	IOA	23	34	OUT REQ	IOC	199	23
GP 1 CHAN 1 OUT REQ	IOA	23	38	OUT REQ	IOC	199	18
GP 1 CHAN 2 OUT REQ	IOA	23	42	OUT REQ	IOC	199	13
GP 1 CHAN 3 OUT REQ	IOA	23	46	OUT REQ	IOC	199	8
DATA BIT 0	IOA	24	21	ADPTR BIT 00	IOC	62	24X
DATA BIT 1	IOA	24	22	ADPTR BIT 01	IOC	62	23X
DATA BIT 2	IOA	24	23	ADPTR BIT 02	IOC	62	22X
DATA BIT 3	IOA	24	24	ADPTR BIT 03	IOC	62	21X
DATA BIT 4	IOA	25	21	ADPTR BIT 04	IOC	62	24Y
DATA BIT 5	IOA	25	22	ADPTR BIT 05	IOC	62	23Y
DATA BIT 6	IOA	25	23	ADPTR BIT 06	IOC	62	22Y
DATA BIT 7	IOA	25	24	ADPTR BIT 07	IOC	62	21Y
DATA BIT 8	IOA	26	21	ADPTR BIT 08	IOC	65	40X
DATA BIT 9	IOA	26	22	ADPTR BIT 09	IOC	65	34X
DATA BIT 10	IOA	26	23	ADPTR BIT 10	IOC	65	30X
DATA BIT 11	IOA	26	24	ADPTR BIT 11	IOC	65	26X
DATA BIT 12	IOA	27	21	ADPTR BIT 12	IOC	67	-
DATA BIT 13	IOA	27	22	ADPTR BIT 13	IOC	67	-
DATA BIT 14	IOA	27	23	ADPTR BIT 14	IOC	67	-
DATA BIT 15	IOA	27	24	ADPTR BIT 15	IOC	67	-
DATA BIT 16	IOA	28	21	ADPTR BIT 16	IOC	63	-
DATA BIT 17	IOA	28	22	ADPTR BIT 17	IOC	63	-

TABLE 1. INTER-UNIT SIGNAL CROSS-REFERENCE (CONT)

FROM				TO			
SIGNAL	UNIT	SHEET	REF DES	SIGNAL	UNIT	SHEET	REF DES
DATA BIT 18	IOA	28	23	ADPTR BIT 18	IOC	63	-
DATA BIT 19	IOA	28	24	ADPTR BIT 19	IOC	63	-
DATA BIT 20	IOA	29	21	ADPTR BIT 20	IOC	64	-
DATA BIT 21	IOA	29	22	ADPTR BIT 21	IOC	64	-
DATA BIT 22	IOA	29	23	ADPTR BIT 22	IOC	64	-
DATA BIT 23	IOA	29	24	ADPTR BIT 23	IOC	64	-
DATA BIT 24	IOA	30	21	ADPTR BIT 24	IOC	66	-
DATA BIT 25	IOA	30	22	ADPTR BIT 25	IOC	66	-
DATA BIT 26	IOA	30	23	ADPTR BIT 26	IOC	66	-
DATA BIT 27	IOA	30	24	ADPTR BIT 27	IOC	66	-
DATA BIT 28	IOA	31	27	ADPTR BIT 28	IOC	73	-
DATA BIT 29	IOA	31	28	ADPTR BIT 29	IOC	73	-
DATA BIT 30	IOA	31	21	ADPTR BIT 30	IOC	73	-
DATA BIT 31	IOA	31	22	ADPTR BIT 31	IOC	73	-
CHAN 4 EXT INTRPT ENBL	IOA	32	31				J43-04
CHAN 4 EXT INTRPT ENBL RTN	IOA	32	-				J43-09
CHAN 5 EXT INTRPT ENBL	IOA	32	32				J51-04
CHAN 5 EXT INTRPT ENBL RTN	IOA	32	-				J51-09
CHAN 4 INP ACK	IOA	32	25				J43-02
CHAN 4 INP ACK RTN	IOA	32	-				J43-07
CHAN 4 OUT ACK	IOA	32	26				J44-01
CHAN 4 OUT ACK RTN	IOA	32	-				J44-06
CHAN 4 EF ACK	IOA	32	27				J44-03
CHAN 4 EF ACK RTN	IOA	32	-				J44-08
CHAN 5 INP ACK	IOA	32	28				J51-02
CHAN 5 INP ACK RTN	IOA	32	-				J51-07
CHAN 5 OUT ACK	IOA	32	29				J52-01
CHAN 5 OUT ACK RTN	IOA	32	-				J52-06
CHAN 5 EF ACK	IOA	32	30				J52-03
CHAN 5 EF ACK RTN	IOA	32	-				J52-08
CHAN 6 EXT INTRPT ENBL	IOA	33	31				J59-04
CHAN 6 EXT INTRPT ENBL RTN	IOA	33	-				J59-09
CHAN 7 EXT INTRPT ENBL	IOA	33	32				J67-04
CHAN 7 EXT INTRPT ENBL RTN	IOA	33	-				J67-09
CHAN 6 IN ACK	IOA	33	25				J59-02
CHAN 6 IN ACK RTN	IOA	33	-				J59-07
CHAN 6 OUT ACK	IOA	33	26				J60-01
CHAN 6 OUT ACK RTN	IOA	33	-				J60-06
CHAN 6 EF ACK	IOA	33	27				J60-03
CHAN 6 EF ACK RTN	IOA	33	-				J60-08
CHAN 7 IN ACK	IOA	33	28				J67-02
CHAN 7 IN ACK RTN	IOA	33	-				J67-07
CHAN 7 OUT ACK	IOA	33	29				J68-01
CHAN 7 OUT ACK RTN	IOA	33	-				J68-06
CHAN 7 EF ACK	IOA	33	30				J68-03
CHAN 7 EF ACK RTN	IOA	33	-				J68-08
GP 1 OUT DATA BIT 0	IOA	34	33				J52-13
GP 1 OUT DATA BIT 0 RTN	IOA	34	-				J52-21

TABLE 1. INTER-UNIT SIGNAL CROSS-REFERENCE (CONT)

FROM					TO			
SIGNAL	UNIT	SHEET	REF DES		SIGNAL	UNIT	SHEET	REF DES
GP 1 OUT DATA BIT 1	IOA	34	34					J52-14
GP 1 OUT DATA BIT 1 RTN	IOA	34	-					J52-22
GP 1 OUT DATA BIT 2	IOA	34	35					J52-15
GP 1 OUT DATA BIT 2 RTN	IOA	34	-					J52-23
GP 1 OUT DATA BIT 3	IOA	34	36					J52-16
GP 1 OUT DATA BIT 3 RTN	IOA	34	-					J52-24
GP 1 OUT DATA BIT 4	IOA	34	37					J52-17
GP 1 OUT DATA BIT 4 RTN	IOA	34	-					J52-25
GP 1 OUT DATA BIT 5	IOA	34	38					J52-18
GP 1 OUT DATA BIT 5 RTN	IOA	34	-					J52-26
GP 1 OUT DATA BIT 6	IOA	34	39					J52-29
GP 1 OUT DATA BIT 6 RTN	IOA	34	-					J52-39
GP 1 OUT DATA BIT 7	IOA	34	40					J52-30
GP 1 OUT DATA BIT 7 RTN	IOA	35	-					J52-40
GP 1 OUT DATA BIT 8	IOA	35	33					J52-31
GP 1 OUT DATA BIT 8 RTN	IOA	35	-					J52-41
GP 1 OUT DATA BIT 9	IOA	35	34					J52-32
GP 1 OUT DATA BIT 9 RTN	IOA	35	-					J52-42
GP 1 OUT DATA BIT 10	IOA	35	35					J52-33
GP 1 OUT DATA BIT 10 RTN	IOA	35	-					J52-43
GP 1 OUT DATA BIT 11	IOA	35	36					J52-34
GP 1 OUT DATA BIT 11 RTN	IOA	35	-					J52-44
GP 1 OUT DATA BIT 12	IOA	35	37					J52-35
GP 1 OUT DATA BIT 12 RTN	IOA	35	-					J52-45
GP 1 OUT DATA BIT 13	IOA	35	38					J52-36
GP 1 OUT DATA BIT 13 RTN	IOA	35	-					J52-46
GP 1 OUT DATA BIT 14	IOA	35	39					J52-37
GP 1 OUT DATA BIT 14 RTN	IOA	35	-					J52-47
GP 1 OUT DATA BIT 15	IOA	35	40					J52-49
GP 1 OUT DATA BIT 15 RTN	IOA	35	-					J52-58
GP 1 OUT DATA BIT 16	IOA	36	33					J52-50
GP 1 OUT DATA BIT 16 RTN	IOA	36	-					J52-59
GP 1 OUT DATA BIT 17	IOA	36	34					J52-51
GP 1 OUT DATA BIT 17 RTN	IOA	36	-					J52-60
GP 1 OUT DATA BIT 18	IOA	36	35					J52-52
GP 1 OUT DATA BIT 18 RTN	IOA	36	-					J52-61
GP 1 OUT DATA BIT 19	IOA	36	36					J52-53
GP 1 OUT DATA BIT 19 RTN	IOA	36	-					J52-62
GP 1 OUT DATA BIT 20	IOA	36	37					J52-54
GP 1 OUT DATA BIT 20 RTN	IOA	36	-					J52-63
GP 1 OUT DATA BIT 21	IOA	36	38					J52-55
GP 1 OUT DATA BIT 21 RTN	IOA	36	-					J52-64
GP 1 OUT DATA BIT 22	IOA	36	39					J52-56
GP 1 OUT DATA BIT 22 RTN	IOA	36	-					J52-65
GP 1 OUT DATA BIT 23	IOA	36	40					J52-57
GP 1 OUT DATA BIT 23 RTN	IOA	36	-					J52-66
GP 1 OUT DATA BIT 24	IOA	37	33					J52-67
GP 1 OUT DATA BIT 24 RTN	IOA	37	-					J52-75

TABLE 1. INTER-UNIT SIGNAL CROSS-REFERENCE (CONT)

FROM				TO			
SIGNAL	UNIT	SHEET	REF DES	SIGNAL	UNIT	SHEET	REF DES
GP 1 OUT DATA BIT 25	IOA	37	34				J52-68
GP 1 OUT DATA BIT 25 RTN	IOA	37	-				J52-76
GP 1 OUT DATA BIT 26	IOA	37	35				J52-69
GP 1 OUT DATA BIT 26 RTN	IOA	37	-				J52-77
GP 1 OUT DATA BIT 27	IOA	37	36				J52-70
GP 1 OUT DATA BIT 27 RTN	IOA	37	-				J52-78
GP 1 OUT DATA BIT 28	IOA	37	37				J52-71
GP 1 OUT DATA BIT 28 RTN	IOA	37	-				J52-79
GP 1 OUT DATA BIT 29	IOA	37	38				J52-72
GP 1 OUT DATA BIT 29 RTN	IOA	37	-				J52-80
GP 1 OUT DATA BIT 30	IOA	37	39				J52-73
GP 1 OUT DATA BIT 30 RTN	IOA	37	-				J52-81
GP 1 OUT DATA BIT 31	IOA	37	40				J52-05
GP 1 OUT DATA BIT 31 RTN	IOA	37	-				J52-12
GP 2 OUT + EF ACK	IOA	38	57	$\overline{\text{GP 2 OUT + EF ACK}}$	IOC	200	51
GP 2 OUT REG AVAIL	IOA	38	23	$\overline{\text{GP 2 OUT REG AVAIL}}$	IOC	59	04
GP 2 CHAN 0 IN AVAIL	IOA	39	49	$\overline{\text{GP 2 CHAN 0 INP AVAIL}}$	IOC	61	19X
GP 2 CHAN 1 IN AVAIL	IOA	39	51	$\overline{\text{GP 2 CHAN 1 INP AVAIL}}$	IOC	61	18X
GP 2 CHAN 2 IN AVAIL	IOA	39	53	$\overline{\text{GP 2 CHAN 2 INP AVAIL}}$	IOC	61	17X
GP 2 CHAN 3 IN AVAIL	IOA	39	55	$\overline{\text{GP 2 CHAN 3 INP AVAIL}}$	IOC	61	16Y
GP 2 CHAN 0 IN REQ	IOA	40	33	GP 2 CHAN 0 INP REQ	IOC	184	50
GP 2 CHAN 1 IN REQ	IOA	40	37	GP 2 CHAN 1 INP REQ	IOC	185	50
GP 2 CHAN 2 IN REQ	IOA	40	41	GP 2 CHAN 2 INP REQ	IOC	186	50
GP 2 CHAN 3 IN REQ	IOA	40	45	GP 2 CHAN 3 INP REQ	IOC	187	50
GP 2 CHAN 0 EF REQ	IOA	40	35	GP 2 CHAN 0 EF REQ	IOC	142	17
GP 2 CHAN 1 EF REQ	IOA	40	39	GP 2 CHAN 1 EF REQ	IOC	143	17
GP 2 CHAN 2 EF REQ	IOA	40	43	GP 2 CHAN 2 EF REQ	IOC	144	17
GP 2 CHAN 3 EF REQ	IOA	40	47	GP 2 CHAN 3 EF REQ	IOC	145	17
GP 2 CHAN 0 EI REQ	IOA	40	36	GP 2 CHAN 0 EI REQ	IOC	184	51
GP 2 CHAN 1 EI REQ	IOA	40	40	GP 2 CHAN 1 EI REQ	IOC	185	51
GP 2 CHAN 2 EI REQ	IOA	40	44	GP 2 CHAN 2 EI REQ	IOC	186	51
GP 2 CHAN 3 EI REQ	IOA	40	48	GP 2 CHAN 3 EI REQ	IOC	187	51
GP 2 CHAN 0 OUT REQ	IOA	40	34	OUT REQ	IOC	200	49
GP 2 CHAN 1 OUT REQ	IOA	40	38	OUT REQ	IOC	200	44
GP 2 CHAN 2 OUT REQ	IOA	40	42	OUT REQ	IOC	200	39
GP 2 CHAN 3 OUT REQ	IOA	40	46	OUT REQ	IOC	200	34
DATA BIT 0	IOA	41	21	ADPTR BIT 00	IOC	62	24X
DATA BIT 1	IOA	41	22	ADPTR BIT 01	IOC	62	23X
DATA BIT 2	IOA	41	23	ADPTR BIT 02	IOC	62	22X
DATA BIT 3	IOA	41	24	ADPTR BIT 03	IOC	62	21X
DATA BIT 4	IOA	42	21	ADPTR BIT 04	IOC	62	24Y
DATA BIT 5	IOA	42	22	ADPTR BIT 05	IOC	62	23Y
DATA BIT 6	IOA	42	23	ADPTR BIT 06	IOC	62	22Y
DATA BIT 7	IOA	42	24	ADPTR BIT 07	IOC	62	21Y
DATA BIT 8	IOA	43	21	ADPTR BIT 08	IOC	65	40X
DATA BIT 9	IOA	43	22	ADPTR BIT 09	IOC	65	34X
DATA BIT 10	IOA	43	23	ADPTR BIT 10	IOC	65	30X
DATA BIT 11	IOA	43	24	ADPTR BIT 11	IOC	65	26X

TABLE 1. INTER-UNIT SIGNAL CROSS-REFERENCE (CONT)

FROM				TO			
SIGNAL	UNIT	SHEET	REF DES	SIGNAL	UNIT	SHEET	REF DES
DATA BIT 12	IOA	44	21	ADPTR BIT 12	IOC	67	-
DATA BIT 13	IOA	44	22	ADPTR BIT 13	IOC	67	-
DATA BIT 14	IOA	44	23	ADPTR BIT 14	IOC	67	-
DATA BIT 15	IOA	44	24	ADPTR BIT 15	IOC	67	-
DATA BIT 16	IOA	45	21	ADPTR BIT 16	IOC	63	-
DATA BIT 17	IOA	45	22	ADPTR BIT 17	IOC	63	-
DATA BIT 18	IOA	45	23	ADPTR BIT 18	IOC	63	-
DATA BIT 19	IOA	45	24	ADPTR BIT 19	IOC	63	-
DATA BIT 20	IOA	46	21	ADPTR BIT 20	IOC	64	-
DATA BIT 21	IOA	46	22	ADPTR BIT 21	IOC	64	-
DATA BIT 22	IOA	46	23	ADPTR BIT 22	IOC	64	-
DATA BIT 23	IOA	46	24	ADPTR BIT 23	IOC	64	-
DATA BIT 24	IOA	47	21	ADPTR BIT 24	IOC	66	-
DATA BIT 25	IOA	47	22	ADPTR BIT 25	IOC	66	-
DATA BIT 26	IOA	47	23	ADPTR BIT 26	IOC	66	-
DATA BIT 27	IOA	47	24	ADPTR BIT 27	IOC	66	-
DATA BIT 28	IOA	48	27	ADPTR BIT 28	IOC	73	-
DATA BIT 29	IOA	48	28	ADPTR BIT 29	IOC	73	-
DATA BIT 30	IOA	48	21	ADPTR BIT 30	IOC	73	-
DATA BIT 31	IOA	48	22	ADPTR BIT 31	IOC	73	-
CHAN 10 EXT INTRPT ENBL	IOA	49	31				J45-04
CHAN 10 EXT INTRPT ENBL RTN	IOA	49	-				J45-09
CHAN 11 EXT INTRPT ENBL	IOA	49	32				J53-04
CHAN 11 EXT INTRPT ENBL RTN	IOA	49	-				J53-09
CHAN 10 INP ACK	IOA	49	25				J45-02
CHAN 10 INP ACK RTN	IOA	49	-				J45-07
CHAN 10 OUT ACK	IOA	49	26				J45-01
CHAN 10 OUT ACK RTN	IOA	49	-				J45-06
CHAN 10 EF ACK	IOA	49	27				J46-03
CHAN 10 EF ACK RTN	IOA	49	-				J46-08
CHAN 11 INP ACK	IOA	49	28				J53-02
CHAN 11 INP ACK RTN	IOA	49	-				J53-07
CHAN 11 OUT ACK	IOA	49	29				J54-01
CHAN 11 OUT ACK RTN	IOA	49	-				J54-06
CHAN 11 EF ACK	IOA	49	30				J54-03
CHAN 11 EF ACK RTN	IOA	49	-				J54-08
CHAN 12 EXT INTRPT ENBL	IOA	50	31				J61-04
CHAN 12 EXT INTRPT ENBL RTN	IOA	50	-				J61-09
CHAN 13 EXT INTRPT ENBL	IOA	50	32				J69-04
CHAN 13 EXT INTRPT ENBL RTN	IOA	50	-				J69-09
CHAN 12 INP ACK	IOA	50	25				J61-02
CHAN 12 INP ACK RTN	IOA	50	-				J61-07
CHAN 12 OUT ACK	IOA	50	26				J62-01
CHAN 12 OUT ACK RTN	IOA	50	-				J62-06
CHAN 12 EF ACK	IOA	50	27				J62-03
CHAN 12 EF ACK RTN	IOA	50	-				J62-08
CHAN 13 INP ACK	IOA	50	28				J69-02
CHAN 13 INP ACK RTN	IOA	50	-				J69-07

TABLE 1. INTER-UNIT SIGNAL CROSS-REFERENCE (CONT)

FROM				TO			
SIGNAL	UNIT	SHEET	REF DES	SIGNAL	UNIT	SHEET	REF DES
CHAN 13 OUT ACK	IOA	50	29				J70-01
CHAN 13 OUT ACK RTN	IOA	50	-				J70-06
CHAN 13 EF ACK	IOA	50	30				J70-03
CHAN 13 EF ACK RTN	IOA	50	-				J70-03
GP 2 OUT DATA BIT 0	IOA	51	33				J62-13
GP 2 OUT DATA BIT 0 RTN	IOA	51	-				J62-21
GP 2 OUT DATA BIT 1	IOA	51	34				J62-14
GP 2 OUT DATA BIT 1 RTN	IOA	51	-				J62-22
GP 2 OUT DATA BIT 2	IOA	51	35				J62-15
GP 2 OUT DATA BIT 2 RTN	IOA	51	-				J62-23
GP 2 OUT DATA BIT 3	IOA	51	36				J62-16
GP 2 OUT DATA BIT 3 RTN	IOA	51	-				J62-24
GP 2 OUT DATA BIT 4	IOA	51	37				J62-17
GP 2 OUT DATA BIT 4 RTN	IOA	51	-				J62-25
GP 2 OUT DATA BIT 5	IOA	51	38				J62-18
GP 2 OUT DATA BIT 5 RTN	IOA	51	-				H62-26
GP 2 OUT DATA BIT 6	IOA	51	39				J62-29
GP 2 OUT DATA BIT 6 RTN	IOA	51	-				J62-39
GP 2 OUT DATA BIT 7	IOA	51	40				J62-30
GP 2 OUT DATA BIT 7 RTN	IOA	51	-				J62-40
GP 2 OUT DATA BIT 8	IOA	52	33				J62-31
GP 2 OUT DATA BIT 8 RTN	IOA	52	-				J62-41
GP 2 OUT DATA BIT 9	IOA	52	34				J62-32
GP 2 OUT DATA BIT 9 RTN	IOA	52	-				J62-42
GP 2 OUT DATA BIT 10	IOA	52	35				J62-33
GP 2 OUT DATA BIT 10 RTN	IOA	52	-				J62-43
GP 2 OUT DATA BIT 11	IOA	52	36				J62-34
GP 2 OUT DATA BIT 11 RTN	IOA	52	-				J62-44
GP 2 OUT DATA BIT 12	IOA	52	37				J62-35
GP 2 OUT DATA BIT 12 RTN	IOA	52	-				J62-45
GP 2 OUT DATA BIT 13	IOA	52	38				J62-36
GP 2 OUT DATA BIT 13 RTN	IOA	52	-				J62-46
GP 2 OUT DATA BIT 14	IOA	52	39				J62-37
GP 2 OUT DATA BIT 14 RTN	IOA	52	-				J62-47
GP 2 OUT DATA BIT 15	IOA	52	40				J62-49
GP 2 OUT DATA BIT 15 RTN	IOA	52	-				J62-58
GP 2 OUT DATA BIT 16	IOA	53	33				J62-50
GP 2 OUT DATA BIT 16 RTN	IOA	53	-				J62-59
GP 2 OUT DATA BIT 17	IOA	53	34				J62-51
GP 2 OUT DATA BIT 17 RTN	IOA	53	-				J62-60
GP 2 OUT DATA BIT 18	IOA	53	35				J62-52
GP 2 OUT DATA BIT 18 RTN	IOA	53	-				J62-61
GP 2 OUT DATA BIT 19	IOA	53	36				J62-53
GP 2 OUT DATA BIT 19 RTN	IOA	53	-				J62-62
GP 2 OUT DATA BIT 20	IOA	53	37				J62-54
GP 2 OUT DATA BIT 20 RTN	IOA	53	-				J62-63
GP 2 OUT DATA BIT 21	IOA	53	38				J62-55
GP 2 OUT DATA BIT 21 RTN	IOA	53	-				J62-64

TABLE 1. INTER-UNIT SIGNAL CROSS-REFERENCE (CONT)

FROM				TO			
SIGNAL	UNIT	SHEET	REF DES	SIGNAL	UNIT	SHEET	REF DES
GP 2 OUT DATA BIT 22	IOA	53	39				J62-56
GP 2 OUT DATA BIT 22 RTN	IOA	53	-				J62-65
GP 2 OUT DATA BIT 23	IOA	53	40				J62-57
GP 2 OUT DATA BIT 23 RTN	IOA	53	-				J62-66
GP 2 OUT DATA BIT 24	IOA	54	33				J62-67
GP 2 OUT DATA BIT 24 RTN	IOA	54	-				J62-75
GP 2 OUT DATA BIT 25	IOA	54	34				J62-68
GP 2 OUT DATA BIT 25 RTN	IOA	54	-				J62-76
GP 2 OUT DATA BIT 26	IOA	54	35				J62-69
GP 2 OUT DATA BIT 26 RTN	IOA	54	-				J62-77
GP 2 OUT DATA BIT 27	IOA	54	36				J62-70
GP 2 OUT DATA BIT 27 RTN	IOA	54	-				J62-78
GP 2 OUT DATA BIT 28	IOA	54	37				J62-71
GP 2 OUT DATA BIT 28 RTN	IOA	54	-				J62-79
GP 2 OUT DATA BIT 29	IOA	54	38				J62-72
GP 2 OUT DATA BIT 29 RTN	IOA	54	-				J62-80
GP 2 OUT DATA BIT 30	IOA	54	39				J62-73
GP 2 OUT DATA BIT 30 RTN	IOA	54	-				J62-81
GP 2 OUT DATA BIT 31	IOA	54	40				J62-05
GP 2 OUT DATA BIT 31 RTN	IOA	54	-				J62-12
GP 3 OUT + EF ACK	IOA	55	57	$\overline{\text{GP 3 OUT + EF ACK}}$	IOC	200	25
GP 3 OUT REG AVAIL	IOA	55	23	$\overline{\text{GP 3 OUT REG AVAIL}}$	IOC	59	03
GP 3 CHAN 0 IN AVAIL	IOA	56	49	$\overline{\text{GP 3 CHAN 0 INP AVAIL}}$	IOC	61	23Y
GP 3 CHAN 1 IN AVAIL	IOA	56	51	$\overline{\text{GP 3 CHAN 1 INP AVAIL}}$	IOC	61	22Y
GP 3 CHAN 2 IN AVAIL	IOA	56	53	$\overline{\text{GP 3 CHAN 2 INP AVAIL}}$	IOC	61	21Y
GP 3 CHAN 3 IN AVAIL	IOA	56	55	$\overline{\text{GP 3 CHAN 3 INP AVAIL}}$	IOC	61	20Y
GP 3 CHAN 0 IN REQ	IOA	57	33	GP 3 CHAN 0 INP REQ	IOC	188	50
GP 3 CHAN 1 IN REQ	IOA	57	37	GP 3 CHAN 1 INP REQ	IOC	189	50
GP 3 CHAN 2 IN REQ	IOA	57	41	GP 3 CHAN 2 INP REQ	IOC	190	50
GP 3 CHAN 3 IN REQ	IOA	57	45	GP 3 CHAN 3 INP REQ	IOC	191	50
GP 3 CHAN 0 EF REQ	IOA	57	35	GP 3 CHAN 0 EF REQ	IOC	146	17
GP 3 CHAN 1 EF REQ	IOA	57	39	GP 3 CHAN 1 EF REQ	IOC	147	17
GP 3 CHAN 2 EF REQ	IOA	57	43	GP 3 CHAN 2 EF REQ	IOC	148	17
GP 3 CHAN 3 EF REQ	IOA	57	47	GP 3 CHAN 2 EF REQ	IOC	149	17
GP 3 CHAN 0 EI REQ	IOA	57	36	GP 3 CHAN 0 EI REQ	IOC	188	51
GP 3 CHAN 1 EI REQ	IOA	57	40	GP 3 CHAN 1 EI REQ	IOC	189	51
GP 3 CHAN 2 EI REQ	IOA	57	44	GP 3 CHAN 2 EI REQ	IOC	190	51
GP 3 CHAN 3 EI REQ	IOA	57	44	GP 3 CHAN 3 EI REQ	IOC	191	51
GP 3 CHAN 0 OUT REQ	IOA	57	35	OUT REQ	IOC	200	23
GP 3 CHAN 1 OUT REQ	IOA	57	39	OUT REQ	IOC	200	18
GP 3 CHAN 2 OUT REQ	IOA	57	43	OUT REQ	IOC	200	13
GP 3 CHAN 3 OUT REQ	IOA	57	47	OUT REQ	IOC	200	8
DATA BIT 0	IOA	58	21	ADPTR BIT 00	IOC	62	24X
DATA BIT 1	IOA	58	22	ADPTR BIT 01	IOC	62	23X
DATA BIT 2	IOA	58	23	ADPTR BIT 02	IOC	62	22X
DATA BIT 3	IOA	58	24	ADPTR BIT 03	IOC	62	21X
DATA BIT 4	IOA	59	21	ADPTR BIT 04	IOC	62	24Y
DATA BIT 5	IOA	59	22	ADPTR BIT 05	IOC	62	23Y

TABLE 1. INTER-UNIT SIGNAL CROSS-REFERENCE (CONT)

FROM				TO			
SIGNAL	UNIT	SHEET	REF DES	SIGNAL	UNIT	SHEET	REF DES
DATA BIT 6	IOA	59	23	ADPTR BIT 06	IOC	62	22Y
DATA BIT 7	IOA	59	24	ADPTR BIT 07	IOC	62	21Y
DATA BIT 8	IOA	60	21	ADPTR BIT 08	IOC	65	40X
DATA BIT 9	IOA	60	22	ADPTR BIT 09	IOC	65	34X
DATA BIT 10	IOA	60	23	ADPTR BIT 10	IOC	65	30X
DATA BIT 11	IOA	60	24	ADPTR BIT 11	IOC	65	26X
DATA BIT 12	IOA	61	21	ADPTR BIT 12	IOC	67	-
DATA BIT 13	IOA	61	22	ADPTR BIT 13	IOC	67	-
DATA BIT 14	IOA	61	23	ADPTR BIT 14	IOC	67	-
DATA BIT 15	IOA	61	24	ADPTR BIT 15	IOC	67	-
DATA BIT 16	IOA	62	21	ADPTR BIT 16	IOC	63	-
DATA BIT 17	IOA	62	22	ADPTR BIT 17	IOC	63	-
DATA BIT 18	IOA	62	23	ADPTR BIT 18	IOC	63	-
DATA BIT 19	IOA	62	24	ADPTR BIT 19	IOC	63	-
DATA BIT 20	IOA	63	21	ADPTR BIT 20	IOC	64	-
DATA BIT 21	IOA	63	22	ADPTR BIT 21	IOC	64	-
DATA BIT 22	IOA	63	23	ADPTR BIT 22	IOC	64	-
DATA BIT 23	IOA	63	24	ADPTR BIT 23	IOC	64	-
DATA BIT 24	IOA	64	21	ADPTR BIT 24	IOC	72	-
DATA BIT 25	IOA	64	22	ADPTR BIT 25	IOC	72	-
DATA BIT 26	IOA	64	23	ADPTR BIT 26	IOC	72	-
DATA BIT 27	IOA	64	24	ADPTR BIT 27	IOC	72	-
DATA BIT 28	IOA	65	27X	ADPTR BIT 28	IOC	73	-
DATA BIT 29	IOA	65	28X	ADPTR BIT 29	IOC	73	-
DATA BIT 30	IOA	65	21X	ADPTR BIT 30	IOC	73	-
DATA BIT 31	IOA	65	22X	ADPTR BIT 31	IOC	73	-
CHAN 14 EXT INTRPT ENBL	IOA	66	31				J63-04
CHAN 14 EXT INTRPT ENBL RTN	IOA	66	-				J63-09
CHAN 15 EXT INTRPT ENBL	IOA	66	32				J71-04
CHAN 15 EXT INTRPT ENBL RTN	IOA	66	-				J71-09
CHAN 14 INP ACK	IOA	66	25				J47-02
CHAN 14 INP ACK RTN	IOA	66	-				J47-07
CHAN 14 OUT ACK	IOA	66	26				J48-01
CHAN 14 OUT ACK RTN	IOA	66	-				J48-06
CHAN 14 EF ACK	IOA	66	27				J48-03
CHAN 14 EF ACK RTN	IOA	66	-				J48-08
CHAN 15 INP ACK	IOA	66	28				J55-02
CHAN 15 INP ACK RTN	IOA	66	-				J55-07
CHAN 15 OUT ACK	IOA	66	29				J56-01
CHAN 15 OUT ACK RTN	IOA	66	-				J56-06
CHAN 15 EF ACK	IOA	66	30				J56-03
CHAN 15 EF ACK RTN	IOA	66	-				J56-08
CHAN 16 EXT INTRPT ENBL	IOA	67	31				J63-04
CHAN 16 EXT INTRPT ENBL RTN	IOA	67	-				J63-09
CHAN 17 EXT INTRPT ENBL	IOA	67	32				J71-04
CHAN 17 EXT INTRPT ENBL RTN	IOA	67	-				J71-09
CHAN 16 INP ACK	IOA	67	25				J63-02
CHAN 16 INP ACK RTN	IOA	67	-				J63-07

TABLE 1. INTER-UNIT SIGNAL CROSS-REFERENCE (CONT)

FROM				TO			
SIGNAL	UNIT	SHEET	REF DES	SIGNAL	UNIT	SHEET	REF DES
CHAN 16 OUT ACK	IOA	67	26				J64-01
CHAN 16 OUT ACK RTN	IOA	67	-				J64-06
CHAN 16 EF ACK	IOA	67	27				J64-03
CHAN 16 EF ACK RTN	IOA	67	-				J64-08
CHAN 17 INP ACK	IOA	67	28				J71-02
CHAN 17 INP ACK RTN	IOA	67	-				J71-07
CHAN 17 OUT ACK	IOA	67	29				J72-01
CHAN 17 OUT ACK RTN	IOA	67	-				J72-06
CHAN 17 EF ACK	IOA	67	30				J72-03
CHAN 17 EF ACK RTN	IOA	67	-				J72-08
GP 3 OUT DATA BIT 0	IOA	68	33				J72-13
GP 3 OUT DATA BIT 0 RTN	IOA	68	-				J72-21
GP 3 OUT DATA BIT 1	IOA	68	34				J72-14
GP 3 OUT DATA BIT 1 RTN	IOA	68	-				J72-22
GP 3 OUT DATA BIT 2	IOA	68	35				J72-15
GP 3 OUT DATA BIT 2 RTN	IOA	68	-				J72-23
GP 3 OUT DATA BIT 3	IOA	68	36				J72-16
GP 3 OUT DATA BIT 3 RTN	IOA	68	-				J72-24
GP 3 OUT DATA BIT 4	IOA	68	37				J72-17
GP 3 OUT DATA BIT 4 RTN	IOA	68	-				J72-25
GP 3 OUT DATA BIT 5	IOA	68	38				J72-18
GP 3 OUT DATA BIT 5 RTN	IOA	68	-				J72-26
GP 3 OUT DATA BIT 6	IOA	68	39				J72-29
GP 3 OUT DATA BIT 6 RTN	IOA	68	-				J72-39
GP 3 OUT DATA BIT 7	IOA	68	40				J72-30
GP 3 OUT DATA BIT 7 RTN	IOA	68	-				J72-40
GP 3 OUT DATA BIT 8	IOA	69	33				J72-31
GP 3 OUT DATA BIT 8 RTN	IOA	69	-				J72-41
GP 3 OUT DATA BIT 9	IOA	69	34				J72-32
GP 3 OUT DATA BIT 9 RTN	IOA	69	-				J72-42
GP 3 OUT DATA BIT 10	IOA	69	35				J72-33
GP 3 OUT DATA BIT 10 RTN	IOA	69	-				J72-43
GP 3 OUT DATA BIT 11	IOA	69	36				J72-34
GP 3 OUT DATA BIT 11 RTN	IOA	69	-				J72-44
GP 3 OUT DATA BIT 12	IOA	69	37				J72-35
GP 3 OUT DATA BIT 12 RTN	IOA	69	-				J72-45
GP 3 OUT DATA BIT 13	IOA	69	38				J72-36
GP 3 OUT DATA BIT 13 RTN	IOA	69	-				J72-46
GP 3 OUT DATA BIT 14	IOA	69	39				J72-37
GP 3 OUT DATA BIT 14 RTN	IOA	69	-				J72-47
GP 3 OUT DATA BIT 15	IOA	69	40				J72-49
GP 3 OUT DATA BIT 15 RTN	IOA	69	-				J72-58
GP 3 OUT DATA BIT 16	IOA	70	33				J72-50
GP 3 OUT DATA BIT 16 RTN	IOA	70	-				J72-59
GP 3 OUT DATA BIT 17	IOA	70	34				J72-51
GP 3 OUT DATA BIT 17 RTN	IOA	70	-				J72-60
GP 3 OUT DATA BIT 18	IOA	70	35				J72-52
GP 3 OUT DATA BIT 18 RTN	IOA	70	-				J72-61

TABLE 1. INTER-UNIT SIGNAL CROSS-REFERENCE (CONT)

FROM				TO			
SIGNAL	UNIT	SHEET	REF DES	SIGNAL	UNIT	SHEET	REF DES
GP 3 OUT DATA BIT 19	IOA	70	36				J72-53
GP 3 OUT DATA BIT 19 RTN	IOA	70	-				J72-62
GP 3 OUT DATA BIT 20	IOA	70	37				J72-54
GP 3 OUT DATA BIT 20 RTN	IOA	70	-				J72-63
GP 3 OUT DATA BIT 21	IOA	70	38				J72-55
GP 3 OUT DATA BIT 21 RTN	IOA	70	-				J72-64
GP 3 OUT DATA BIT 22	IOA	70	39				J72-56
GP 3 OUT DATA BIT 22 RTN	IOA	70	-				J72-65
GP 3 OUT DATA BIT 23	IOA	70	40				J72-57
GP 3 OUT DATA BIT 23 RTN	IOA	70	-				J72-66
GP 3 OUT DATA BIT 24	IOA	71	33				J72-67
GP 3 OUT DATA BIT 24 RTN	IOA	71	-				J72-75
GP 3 OUT DATA BIT 25	IOA	71	34				J72-68
GP 3 OUT DATA BIT 25 RTN	IOA	71	-				J72-76
GP 3 OUT DATA BIT 26	IOA	71	35				J72-69
GP 3 OUT DATA BIT 26 RTN	IOA	71	-				J72-77
GP 3 OUT DATA BIT 27	IOA	71	36				J72-70
GP 3 OUT DATA BIT 27 RTN	IOA	71	-				J72-78
GP 3 OUT DATA BIT 28	IOA	71	37				J72-71
GP 3 OUT DATA BIT 28 RTN	IOA	71	-				J72-79
GP 3 OUT DATA BIT 29	IOA	71	38				J72-72
GP 3 OUT DATA BIT 29 RTN	IOA	71	-				J72-80
GP 3 OUT DATA BIT 30	IOA	71	39				J72-73
GP 3 OUT DATA BIT 30 RTN	IOA	71	-				J72-81
GP 3 OUT DATA BIT 31	IOA	71	40				J72-05
GP 3 OUT DATA BIT 31 RTN	IOA	71	-				J72-12
VOLTAGE INP SPEC IND	IOA	72	04D	A1 PWR STATUS	OP	2	S20
VOLTAGE SENSOR	IOA	72	04D	TURN OFF GATE II	PS	1725	E15
BATTLE SHORT	IOA	72	CARDS 1B,40A,40C	BATTLE S.H.	OP	2	DS1
HIGH OVER TEMP (REAR)	IOA	72	CARDS 40A,40C	-	OP	1	S12
HIGH OVER TEMP (FRONT)	IOA	72	CARD 1B	-	OP	1	S12
LOW OVER TEMP IND (REAR)	IOA	72	CARDS 40A,40C	A1 O.T.	OP	1	DS14
LOW OVER TEMP IND (FRONT)	IOA	72	CARD 1B	OVERTEMP	MC	2	DS5
LOW OVER TEMP HORN	IOA	72	CARD 1B	-	OP	2	LS1
SERIAL IO ADAPTER OUTPUT SIGNALS							
RGTR AVAIL	IOA	56	43	$\overline{\text{GP 3 OUT RGTR AVAIL}}$	IOC	59	06
OD REQ CHAN 14	IOA	56	30	GP 3 CHAN 0 OUT REQ	IOC	198	03
EF REQ CHAN 14	IOA	56	29	GP 3 CHAN 0 EF REQ	IOC	146	17
OD REQ CHAN 15	IOA	57	30	GP 3 CHAN 1 OUT REQ	IOC	198	02
EF REQ CHAN 15	IOA	57	29	GP 3 CHAN 1 EF REQ	IOC	147	17
OD REQ CHAN 16	IOA	58	30	GP 3 CHAN 2 OUT REQ	IOC	198	01
EF REQ CHAN 16	IOA	58	29	GP 3 CHAN 2 EF REQ	IOC	148	17
OD REQ CHAN 17	IOA	59	30	GP 3 CHAN 3 OUT REQ	IOC	198	00
EF REQ CHAN 17	IOA	59	29	GP 3 CHAN 3 EF REQ	IOC	149	17
ID REQ CHAN 14	IOA	60	15	GP 3 CHAN 0 INP REQ	IOC	188	50
EI REQ CHAN 14	IOA	60	16	GP 3 CHAN 0 EI REQ	IOC	188	51

TABLE 1. INTER-UNIT SIGNAL CROSS-REFERENCE (CONT)

FROM				TO			
SIGNAL	UNIT	SHEET	REF DES	SIGNAL	UNIT	SHEET	REF DES
ID REQ CHAN 15	IOA	61	15	GP 3 CHAN 1 INP REQ	IOC	189	50
EI REQ CHAN 15	IOA	61	16	GP 3 CHAN 1 EI REQ	IOC	189	51
ID REQ CHAN 16	IOA	62	15	GP 3 CHAN 2 INP REQ	IOC	190	50
EI REQ CHAN 16	IOA	62	16	GP 3 CHAN 2 EI REQ	IOC	190	51
ID REQ CHAN 17	IOA	63	15	GP 3 CHAN 3 INP REQ	IOC	191	50
EI REQ CHAN 17	IOA	63	16	GP 3 CHAN 3 EI REQ	IOC	191	51
INP AVAIL CHAN 14	IOA	65	33	GP 3 CHAN 0 INP AVAIL	IOC	61	23Y
INP AVAIL CHAN 15	IOA	65	34	GP 3 CHAN 1 INP AVAIL	IOC	61	22Y
INP AVAIL CHAN 16	IOA	65	35	GP 3 CHAN 2 INP AVAIL	IOC	61	21Y
INP AVAIL CHAN 17	IOA	65	36	GP 3 CHAN 3 INP AVAIL	IOC	61	20Y
ADPTR BIT 16	IOA	73	32	ADPTR BIT 16			J201-K-01
ADPTR BIT 17	IOA	73	31	ADPTR BIT 17			J201-K-02
ADPTR BIT 18	IOA	73	30	ADPTR BIT 18			J201-K-03
ADPTR BIT 19	IOA	73	29	ADPTR BIT 19			J201-K-04
ADPTR BIT 20	IOA	73	28	ADPTR BIT 20			J201-K-05
ADPTR BIT 21	IOA	73	27	ADPTR BIT 21			J201-K-06
ADPTR BIT 22	IOA	73	26	ADPTR BIT 22			J201-K-07
ADPTR BIT 23	IOA	73	25	ADPTR BIT 23			J201-K-08
ADPTR BIT 24	IOA	73	24	ADPTR BIT 24			J201-K-09
ADPTR BIT 25	IOA	73	23	ADPTR BIT 25			J201-K-10
ADPTR BIT 26	IOA	73	22	ADPTR BIT 26			J201-K-11
ADPTR BIT 27	IOA	73	21	ADPTR BIT 27			J201-K-12
ADPTR BIT 28	IOA	73	20	ADPTR BIT 28			J201-K-13
ADPTR BIT 29	IOA	73	19	ADPTR BIT 29			J201-K-14
ADPTR BIT 30	IOA	73	18	ADPTR BIT 30			J201-K-15
ADPTR BIT 31	IOA	73	17	ADPTR BIT 31			J201-K-16
ADPTR BIT 00	IOA	74	36	ADPTR BIT 00			J201-H-01
ADPTR BIT 01	IOA	74	35	ADPTR BIT 01			J201-H-02
ADPTR BIT 02	IOA	74	34	ADPTR BIT 02			J201-H-03
ADPTR BIT 03	IOA	74	33	ADPTR BIT 03			J201-H-04
ADPTR BIT 04	IOA	74	32	ADPTR BIT 04			J201-H-05
ADPTR BIT 05	IOA	74	31	ADPTR BIT 05			J201-H-06
ADPTR BIT 06	IOA	74	30	ADPTR BIT 06			J201-H-07
ADPTR BIT 07	IOA	74	29	ADPTR BIT 07			J201-H-08
ADPTR BIT 08	IOA	74	28	ADPTR BIT 08			J201-H-09
ADPTR BIT 09	IOA	74	27	ADPTR BIT 09			J201-H-10
ADPTR BIT 10	IOA	74	26	ADPTR BIT 10			J201-H-11
ADPTR BIT 11	IOA	74	25	ADPTR BIT 11			J201-H-12
ADPTR BIT 12	IOA	74	24	ADPTR BIT 12			J201-H-13
ADPTR BIT 13	IOA	74	23	ADPTR BIT 13			J201-H-14
ADPTR BIT 14	IOA	74	22	ADPTR BIT 14			J201-H-15
ADPTR BIT 15	IOA	74	21	ADPTR BIT 15			J201-H-16
ADPTR BIT 16	IOA	75	32	ADPTR BIT 16	IOC	63	-
ADPTR BIT 17	IOA	75	31	ADPTR BIT 17	IOC	63	-
ADPTR BIT 18	IOA	75	30	ADPTR BIT 18	IOC	63	-
ADPTR BIT 19	IOA	75	29	ADPTR BIT 19	IOC	63	-
ADPTR BIT 20	IOA	75	28	ADPTR BIT 20	IOC	64	-
ADPTR BIT 21	IOA	75	27	ADPTR BIT 21	IOC	64	-

TABLE 1. INTER-UNIT SIGNAL CROSS-REFERENCE (CONT)

FROM				TO			
SIGNAL	UNIT	SHEET	REF DES	SIGNAL	UNIT	SHEET	REF DES
ADPTR BIT 22	IOA	75	26	ADPTR BIT 22	IOC	64	-
ADPTR BIT 23	IOA	75	25	ADPTR BIT 23	IOC	64	-
ADPTR BIT 24	IOA	75	24	ADPTR BIT 24	IOC	66	-
ADPTR BIT 25	IOA	75	23	ADPTR BIT 25	IOC	66	-
ADPTR BIT 26	IOA	75	22	ADPTR BIT 26	IOC	66	-
ADPTR BIT 27	IOA	75	21	ADPTR BIT 27	IOC	66	-
ADPTR BIT 28	IOA	75	20	ADPTR BIT 28	IOC	73	-
ADPTR BIT 29	IOA	75	19	ADPTR BIT 29	IOC	73	-
ADPTR BIT 30	IOA	75	18	ADPTR BIT 30	IOC	73	-
ADPTR BIT 31	IOA	75	17	ADPTR BIT 31	IOC	73	-
ADPTR BIT 00	IOA	76	36	ADPTR BIT 00	IOC	62	24X
ADPTR BIT 01	IOA	76	35	ADPTR BIT 01	IOC	62	23X
ADPTR BIT 02	IOA	76	34	ADPTR BIT 02	IOC	62	22X
ADPTR BIT 03	IOA	76	33	ADPTR BIT 03	IOC	62	21X
ADPTR BIT 04	IOA	76	32	ADPTR BIT 04	IOC	62	24Y
ADPTR BIT 05	IOA	76	31	ADPTR BIT 05	IOC	62	23Y
ADPTR BIT 06	IOA	76	30	ADPTR BIT 06	IOC	62	22Y
ADPTR BIT 07	IOA	76	29	ADPTR BIT 07	IOC	62	21Y
ADPTR BIT 08	IOA	76	28	ADPTR BIT 08	IOC	65	40X
ADPTR BIT 09	IOA	76	27	ADPTR BIT 09	IOC	65	34X
ADPTR BIT 10	IOA	76	26	ADPTR BIT 10	IOC	65	30X
ADPTR BIT 11	IOA	76	25	ADPTR BIT 11	IOC	65	26X
ADPTR BIT 12	IOA	76	24	ADPTR BIT 12	IOC	67	-
ADPTR BIT 13	IOA	76	23	ADPTR BIT 13	IOC	67	-
ADPTR BIT 14	IOA	76	22	ADPTR BIT 14	IOC	67	-
ADPTR BIT 15	IOA	76	21	ADPTR BIT 15	IOC	67	-
ADPTR BIT 16	IOA	77	32	ADPTR BIT 16	IOC	63	-
ADPTR BIT 17	IOA	77	31	ADPTR BIT 17	IOC	63	-
ADPTR BIT 18	IOA	77	30	ADPTR BIT 18	IOC	63	-
ADPTR BIT 19	IOA	77	29	ADPTR BIT 19	IOC	63	-
ADPTR BIT 20	IOA	77	28	ADPTR BIT 20	IOC	64	-
ADPTR BIT 21	IOA	77	27	ADPTR BIT 21	IOC	64	-
ADPTR BIT 22	IOA	77	26	ADPTR BIT 22	IOC	64	-
ADPTR BIT 23	IOA	77	25	ADPTR BIT 23	IOC	64	-
ADPTR BIT 24	IOA	77	24	ADPTR BIT 24	IOC	66	-
ADPTR BIT 25	IOA	77	23	ADPTR BIT 25	IOC	66	-
ADPTR BIT 26	IOA	77	22	ADPTR BIT 26	IOC	66	-
ADPTR BIT 27	IOA	77	21	ADPTR BIT 27	IOC	66	-
ADPTR BIT 28	IOA	77	20	ADPTR BIT 28	IOC	73	-
ADPTR BIT 29	IOA	77	19	ADPTR BIT 29	IOC	73	-
ADPTR BIT 30	IOA	77	18	ADPTR BIT 30	IOC	73	-
ADPTR BIT 31	IOA	77	17	ADPTR BIT 31	IOC	73	-
ADPTR BIT 00	IOA	78	36	ADPTR BIT 00	IOC	62	24X
ADPTR BIT 01	IOA	78	35	ADPTR BIT 01	IOC	62	23X
ADPTR BIT 02	IOA	78	34	ADPTR BIT 02	IOC	62	22X
ADPTR BIT 03	IOA	78	33	ADPTR BIT 03	IOC	62	21X
ADPTR BIT 04	IOA	78	32	ADPTR BIT 04	IOC	62	24Y
ADPTR BIT 05	IOA	78	31	ADPTR BIT 05	IOC	62	23Y

TABLE 1. INTER-UNIT SIGNAL CROSS-REFERENCE (CONT)

FROM				TO			
SIGNAL	UNIT	SHEET	REF DES	SIGNAL	UNIT	SHEET	REF DES
ADPTR BIT 06	IOA	78	30	ADPTR BIT 06	IOC	62	22Y
ADPTR BIT 07	IOA	78	29	ADPTR BIT 07	IOC	62	21Y
ADPTR BIT 08	IOA	78	28	ADPTR BIT 08	IOC	65	40X
ADPTR BIT 09	IOA	78	27	ADPTR BIT 09	IOC	65	34X
ADPTR BIT 10	IOA	78	26	ADPTR BIT 10	IOC	65	30X
ADPTR BIT 11	IOA	78	25	ADPTR BIT 11	IOC	65	26X
ADPTR BIT 12	IOA	78	24	ADPTR BIT 12	IOC	67	-
ADPTR BIT 13	IOA	78	23	ADPTR BIT 13	IOC	67	-
ADPTR BIT 14	IOA	78	22	ADPTR BIT 14	IOC	67	-
ADPTR BIT 15	IOA	78	21	ADPTR BIT 15	IOC	67	-
ADPTR BIT 16	IOA	79	32	ADPTR BIT 16	IOC	63	-
ADPTR BIT 17	IOA	79	31	ADPTR BIT 17	IOC	63	-
ADPTR BIT 18	IOA	79	30	ADPTR BIT 18	IOC	63	-
ADPTR BIT 19	IOA	79	29	ADPTR BIT 19	IOC	63	-
ADPTR BIT 20	IOA	79	28	ADPTR BIT 20	IOC	64	-
ADPTR BIT 21	IOA	79	27	ADPTR BIT 21	IOC	64	-
ADPTR BIT 22	IOA	79	26	ADPTR BIT 22	IOC	64	-
ADPTR BIT 23	IOA	79	25	ADPTR BIT 23	IOC	64	-
ADPTR BIT 24	IOA	79	24	ADPTR BIT 24	IOC	66	-
ADPTR BIT 25	IOA	79	23	ADPTR BIT 25	IOC	66	-
ADPTR BIT 26	IOA	79	22	ADPTR BIT 26	IOC	66	-
ADPTR BIT 27	IOA	79	21	ADPTR BIT 27	IOC	66	-
ADPTR BIT 28	IOA	79	20	ADPTR BIT 28	IOC	73	-
ADPTR BIT 29	IOA	79	19	ADPTR BIT 29	IOC	73	-
ADPTR BIT 30	IOA	79	18	ADPTR BIT 30	IOC	73	-
ADPTR BIT 31	IOA	79	17	ADPTR BIT 31	IOC	73	-
ADPTR BIT 00	IOA	80	36	ADPTR BIT 00	IOC	62	24X
ADPTR BIT 01	IOA	80	35	ADPTR BIT 01	IOC	62	23X
ADPTR BIT 02	IOA	80	34	ADPTR BIT 02	IOC	62	22X
ADPTR BIT 03	IOA	80	33	ADPTR BIT 03	IOC	62	21X
ADPTR BIT 04	IOA	80	32	ADPTR BIT 04	IOC	62	24Y
ADPTR BIT 05	IOA	80	31	ADPTR BIT 05	IOC	62	23Y
ADPTR BIT 06	IOA	80	30	ADPTR BIT 06	IOC	62	22Y
ADPTR BIT 07	IOA	80	29	ADPTR BIT 07	IOC	62	21Y
ADPTR BIT 08	IOA	80	28	ADPTR BIT 08	IOC	65	40X
ADPTR BIT 09	IOA	80	27	ADPTR BIT 09	IOC	65	34X
ADPTR BIT 10	IOA	80	26	ADPTR BIT 10	IOC	65	30X
ADPTR BIT 11	IOA	80	25	ADPTR BIT 11	IOC	65	26X
ADPTR BIT 12	IOA	80	24	ADPTR BIT 12	IOC	67	-
ADPTR BIT 13	IOA	80	23	ADPTR BIT 13	IOC	67	-
ADPTR BIT 14	IOA	80	22	ADPTR BIT 14	IOC	67	-
ADPTR BIT 15	IOA	80	21	ADPTR BIT 15	IOC	67	-
ADPTR BIT 16	IOA	81	32	ADPTR BIT 16	IOC	63	-
ADPTR BIT 17	IOA	81	31	ADPTR BIT 17	IOC	63	-
ADPTR BIT 18	IOA	81	30	ADPTR BIT 18	IOC	63	-
ADPTR BIT 19	IOA	81	29	ADPTR BIT 19	IOC	63	-
ADPTR BIT 20	IOA	81	28	ADPTR BIT 20	IOC	64	-
ADPTR BIT 21	IOA	81	27	ADPTR BIT 21	IOC	64	-

TABLE 1. INTER-UNIT SIGNAL CROSS-REFERENCE (CONT)

FROM				TO			
SIGNAL	UNIT	SHEET	REF DES	SIGNAL	UNIT	SHEET	REF DES
ADPTR BIT 22	IOA	81	26	ADPTR BIT 22	IOC	64	-
ADPTR BIT 23	IOA	81	25	ADPTR BIT 23	IOC	64	-
ADPTR BIT 24	IOA	81	24	ADPTR BIT 24	IOC	66	-
ADPTR BIT 25	IOA	81	23	ADPTR BIT 25	IOC	66	-
ADPTR BIT 26	IOA	81	22	ADPTR BIT 26	IOC	66	-
ADPTR BIT 27	IOA	81	21	ADPTR BIT 27	IOC	66	-
ADPTR BIT 28	IOA	81	20	ADPTR BIT 28	IOC	73	-
ADPTR BIT 29	IOA	81	19	ADPTR BIT 29	IOC	73	-
ADPTR BIT 30	IOA	81	18	ADPTR BIT 30	IOC	73	-
ADPTR BIT 31	IOA	81	17	ADPTR BIT 31	IOC	73	-
ADPTR BIT 00	IOA	82	36	ADPTR BIT 00	IOC	62	24X
ADPTR BIT 01	IOA	82	35	ADPTR BIT 01	IOC	62	23X
ADPTR BIT 02	IOA	82	34	ADPTR BIT 02	IOC	62	22X
ADPTR BIT 03	IOA	82	33	ADPTR BIT 03	IOC	62	21X
ADPTR BIT 04	IOA	82	32	ADPTR BIT 04	IOC	62	24Y
ADPTR BIT 05	IOA	82	31	ADPTR BIT 05	IOC	62	23Y
ADPTR BIT 06	IOA	82	30	ADPTR BIT 06	IOC	62	22Y
ADPTR BIT 07	IOA	82	29	ADPTR BIT 07	IOC	62	21Y
ADPTR BIT 08	IOA	82	28	ADPTR BIT 08	IOC	65	40X
ADPTR BIT 09	IOA	82	27	ADPTR BIT 09	IOC	65	34X
ADPTR BIT 10	IOA	82	26	ADPTR BIT 10	IOC	65	30X
ADPTR BIT 11	IOA	82	25	ADPTR BIT 11	IOC	65	26X
ADPTR BIT 12	IOA	82	24	ADPTR BIT 12	IOC	67	-
ADPTR BIT 13	IOA	82	23	ADPTR BIT 13	IOC	67	-
ADPTR BIT 14	IOA	82	22	ADPTR BIT 14	IOC	67	-
ADPTR BIT 15	IOA	82	21	ADPTR BIT 15	IOC	67	-
LOW OVERTEMP HORN	IOA	83	01B	-	OP	2	LS1
BATTLE SHORT	IOA	83	CARD 1B,40A,40C	BATTLE S.H.	OP	2	DS1
VOLTAGE SENSOR	IOA	83	CARD 04D	TURN-OFF GATE II	PS	1725	E15
VOLTAGE IN SPEC IND	IOA	83	CARD 04D	A1 PWR STATUS	OP	2	S9
LOW OVERTEMP IND (REAR)	IOA	83	40A,40C	-	OP	1	S12
LOW OVERTEMP IND (FRONT)	IOA	83	CARD 1B	OVERTEMP	MC	2	DS5
HIGH OVERTEMP (REAR)	IOA	83	40A,40C	-	OP	1	S12
HIGH OVERTEMP (FRONT)	IOA	83	CARD 1B	-	OP	1	S12
POWER SUPPLY OUTPUT SIGNALS							
POWER INTERRUPT	PS	3090	Q5	$\overline{\text{PWR INTRPT}}$	CP	224	24
MASTER CLR	PS	3090	Q18	$\overline{\text{AUTO MA CLR}}$	CP	234	01
U REG SEL	MC	1	S53	$\overline{\text{CSL U RGTR SEL}}$	CP	192	39
M REG SEL	MC	1	S54	$\overline{\text{CSL M RGTR SEL}}$	CP	192	34
Q REG SEL	MC	1	S55	$\overline{\text{CSL Q RGTR SEL}}$	CP	192	33
D REG SEL	MC	1	S56	$\overline{\text{CSL D RGTR SEL}}$	CP	192	32
P REG SEL	MC	1	S73	$\overline{\text{CSL P RGTR SEL}}$	CP	192	41
CM REG SEL	MC	1	S74	$\overline{\text{CSL CM SEL}}$	CP	192	35
R REG SEL	MC	1	S75	$\overline{\text{CSL R RGTR SEL}}$	CP	192	40
Y REG SEL	MC	1	S76	$\overline{\text{CSL Y RGTR SEL}}$	CP	192	38
PHASE SEL	MC	1	S130	$\overline{\text{CSL PHASE SEL}}$	CP	192	42

TABLE 1. INTER-UNIT SIGNAL CROSS-REFERENCE (CONT)

FROM				TO			
SIGNAL	UNIT	SHEET	REF DES	SIGNAL	UNIT	SHEET	REF DES
SEQ SEL	MC	1	S131	CSL SEQ SEL	CP	192	37
INST SEL	MC	1	S132	CSL INSTR SEL	CP	192	43
RUN SEL	MC	1	S133	CSL RUN SEL	CP	192	36
I/O REG BIT 00	MC	3	S6	CSL DSPL 00	IOC	108	14
I/O REG BIT 01	MC	3	S7	CSL DSPL 01	IOC	108	16
I/O REG BIT 02	MC	3	S8	CSL DSPL 02	IOC	108	15
I/O REG BIT 03	MC	3	S9	CSL DSPL 03	IOC	109	14
I/O REG BIT 04	MC	3	S10	CSL DSPL 04	IOC	109	16
I/O REG BIT 05	MC	3	S11	CSL DSPL 05	IOC	109	15
I/O REG BIT 06	MC	3	S12	CSL DSPL 06	IOC	110	14
I/O REG BIT 07	MC	3	S13	CSL DSPL 07	IOC	110	16
I/O REG BIT 08	MC	3	S14	CSL DSPL 08	IOC	110	15
I/O REG BIT 09	MC	3	S15	CSL DSPL 09	IOC	111	14
I/O REG BIT 10	MC	3	S16	CSL DSPL 10	IOC	111	16
I/O REG BIT 11	MC	3	S17	CSL DSPL 11	IOC	111	15
I/O REG BIT 12	MC	3	S18	CSL DSPL 12	IOC	112	14
I/O REG BIT 13	MC	3	S19	CSL DSPL 13	IOC	112	16
I/O REG BIT 14	MC	3	S20	CSL DSPL 14	IOC	112	15
I/O REG BIT 15	MC	3	S21	CSL DSPL 15	IOC	113	14
I/O REG BIT 16	MC	3	S22	CSL DSPL 16	IOC	113	16
I/O REG BIT 17	MC	3	S23	CSL DSPL 17	IOC	113	15
MON/CHAIN	MC	3	S24	CSL DSPL 18	IOC	44	16
CM ADRS SEL/SEL 2 0	MC	3	S26	CSL SEL 2 BIT 00	IOC	47	11
CM ADRS SEL/SEL 2 01	MC	3	S27	CSL SEL 2 BIT 01	IOC	47	10
CM ADRS SEL/SEL 2 02	MC	3	S28	CSL SEL 2 BIT 02	IOC	47	9
CM ADRS SEL/SEL 2 03	MC	3	S29	CSL SEL 2 BIT 03	IOC	47	8
CM ADRS SEL/SEL 2 04	MC	3	S30	CSL SEL 2 BIT 04	IOC	47	7
CM ADRS SEL/SEL 2 05	MC	3	S31	CSL SEL 2 BIT 05	IOC	47	06
REG SEL/ SEL-2	MC	3	S32	CSL SEL 2 SEL	IOC	46	64
REG SEL/ DIR L	MC	3	S33	CSL DIR LWR SEL	IOC	46	63
REG SEL/ DIR U	MC	3	S34	CSL DIR UPR SEL	IOC	46	62
REG SEL/ CM L	MC	3	S35	CSL CM LWR SEL	IOC	45	49
REG SEL/ CM U	MC	3	S36	CSL CM UPR SEL	IOC	45	46
REG SEL/ CM P	MC	3	S37	CSL CM POINTER SEL	IOC	45	45
PHASE MODE	MC	3	S45	CSL PHL SEL	IOC	46	65
SEQ MODE	MC	3	S46	PHASE SEL	IOC	45	33
RUN MODE	MC	3	S47	CSL RUN SEL	IOC	45	50
I/O SEQ CONT REQ STORE	MC	3	S52	CSL REQ STORE	IOC	16	02
CM ADD SEL 0	MC	3	S97	CSL CM BIT 00	CP	193	20
CM ADD SEL 1	MC	3	S98	CSL CM BIT 01	CP	193	19
CM ADD SEL 2	MC	3	S99	CSL CM BIT 02	CP	193	18
CM ADD SEL 3	MC	3	S100	CSL CM BIT 03	CP	193	17
CM ADD SEL 4	MC	3	S101	CSL CM BIT 04	CP	193	16
CM ADD SEL 5	MC	3	S102	CSL CM BIT 05	CP	193	15
CM ADD SEL 6	MC	3	S103	CSL CM BIT 06	CP	193	14

TABLE 1. INTER-UNIT SIGNAL CROSS-REFERENCE (CONT)

FROM				TO			
SIGNAL	UNIT	SHEET	REF DES	SIGNAL	UNIT	SHEET	REF DES
OP2 SEQ CONT	MC	3	S120	IND OP2 SEQ	CP	200	32*
OP1 SEQ CONT	MC	3	S121	IND OP1 SEQ	CP	200	29*
IA SEQ CONT	MC	3	S122	IND IA SEQ	CP	199	32*
I SEQ CONT	MC	3	S123	IND I SEQ	CP	199	29*
PANEL SEL	MC	4	S3	SEL MAINT	CP	190	00
				SEL MAINT	CP	191	00
				SEL MAINT PNL	IOC	43	01
CLEAR I/O REG	MC	4	S5	CLR DSPL	IOC	23	07
CM ADD SEL/SEL 2 CLEAR	MC	4	S25	CSL CM RGTR SWITCH	CP	234	05
I/O MCL	MC	4	S42	MAINT PNL MA CLR	IOC	43	04
I/O START	MC	4	S43	START/STEP	IOC	44	02
DISC RTC	MC	4	S44	RTC DISCONNECT	IOC	36	37
CP REG CLEAR	MC	4	S77	-	CP	-	-
CM ADD SEL CLEAR	MC	4	S96	-	CP	-	-
SEQ CONT CLEAR	MC	4	S119	-	CP	230	35
DISC P	MC	4	S126	DSBL ADV P RGTR	CP	199	43
DISC B7	MC	4	S127	B7 DISC	CP	53	23
BREAKPOINT MAN	MC	4	S128	MANUAL BP	CP	218	26
AUTO RECOVERY	MC	4	S138	AUTO RECOVERY (M)	CP	190	21
AR MAN	MC	4	S138	MANUAL BOOTSTRAP (M)	CP	190	24
ADD BS1	MC	4	S139	BOOTSTRAP 1 (M)	CP	190	21
ADD BS2	MC	4	S139	BOOTSTRAP 2 (M)	CP	190	24
CP MCL	MC	4	S140	CONSOLE MA CLR (M)	CP	190	18
LSO ENABLE	MC	4	S141	LSO SW	CP	190	06
	MC	4	S141	LSO SW	CP	191	06
CP START	MC	4	S141	START (M)	CP	190	15
STOP	MC	4	S142	MANUAL STOP (M)	CP	191	18
NEUTRAL	MC	4	S142	NEUTRAL (M)	CP	191	15
STOP 7	MC	4	S143	STOP 7 (M)	CP	190	09
STOP 6	MC	4	S144	STOP 6 (M)	CP	190	11
STOP 5	MC	4	S145	STOP 5 (M)	CP	190	13
JUMP 3	MC	4	S146	JUMP 3 (M)	CP	191	09
JUMP 2	MC	4	S147	JUMP 2 (M)	CP	191	11
JUMP 1	MC	4	S148	JUMP 1 (M)	CP	191	13
OPERATOR PANEL OUTPUT SIGNALS							
AUTO START	OP	2	S6	AUTO START SWITCH	CP	234	07
STOP	OP	2	S7	MANUAL STOP (M)	CP	191	18
RUN NEUT	OP	2	S17	NEUTRAL (M)	CP	191	15
CLEAR	OP	2	S8	CONSOLE MA CLR (M)	CP	190	18
RTC	OP	2	S14	INTL RTC SEL	IOC	36	36
BOOTSTRAP AUTO-REC	OP	2	S15	AUTO RECOVERY (M)	CP	190	21
MANUAL	OP	2	S15	MANUAL BOOTSTRAP (M)	CP	190	24
BS1	OP	2	S16	BOOTSTRAP 1 (M)	CP	191	22

*these signals activate sequence control in CP via corresponding IND output lines

TABLE 1. INTER-UNIT SIGNAL CROSS-REFERENCE (CONT)

FROM				TO			
SIGNAL	UNIT	SHEET	REF DES	SIGNAL	UNIT	SHEET	REF DES
BS2	OP	2	S16	BOOTSTRAP 2 (M)	CP	191	25
RUN	OP	2	S17	CSL RUN SEL	CP	192	36
+90 VDC	RM CSL	1	E66	-	PS	3375	C17
+5 VDC	RM CSL	1	E48	-	PS	3375	C16
+28 VDC	RM CSL	1	E49	-	PS	3375	C14
-5 VDC	RM CSL	1	S19	-	PS	3375	C15
RUN IND	RM CSL	1	DS5	IND RUN	CP	194	17
RUN IND RTN	RM CSL	1	-	RETURN 1	CP	191	26
LOW OVERTEMP BUS	RM CSL	1	DS1	LOW OVERTEMP IND	IOA(P)	72	01B
PWR FAULT IND	RM CSL	1	DS4	POWER FAULT IND	CP	221	33
PROG FAULT IND	RM CSL	1	DS3	HDW FAULT IND	CP	221	34
HDW FAULT IND	RM CSL	1	DS2	PROG FAULT IND	CP	221	35
STOP 5 IND	RM CSL	1	S3	IND STOP 5	CP	195	06
STOP 6 IND	RM CSL	1	S2	IND STOP 6	CP	195	05
STOP 7 IND	RM CSL	1	S1	IND STOP 7	CP	195	04
STOP 4 IND	RM CSL	1	S4	IND STOP 4	CP	195	07
ON LINE SEL	RM CSL	1	E13	REMOTE PNL ON LINE	IOC	43	03
ON LINE RTN	RM CSL	1	E37	r	IOC	43	03
RUN SEL	RM CSL	1	E25	RUN (R)	CP	190	14
RUN RTN	RM CSL	1	E43	RETURN 1	CP	191	26
AUTO-RCVY SEL	RM CSL	1	E19	AUTO-RECOVERY (R)	CP	190	20
AUTO RCVY RTN	RM CSL	1	E40	RETURN 1	CP	191	26
MANUAL SEL	RM CSL	1	E21	MANUAL BOOTSTRAP (R)	CP	190	23
MANUAL RTN	RM CSL	1	E41	RETURN 1	CP	191	26
BOOTSTRAP 1 SEL	RM CSL	1	E15	BOOTSTRAP 1 (R)	CP	191	20
BOOTSTRAP 1 RTN	RM CSL	1	E38	RETURN 2	CP	190	26
BOOTSTRAP 2 SEL	RM CSL	1	E17	BOOTSTRAP 2 (R)	CP	191	23
BOOTSTRAP 2 RTN	RM CSL	1	E39	RETURN 2	CP	190	26
MA CLR SEL	RM CSL	1	E29	REMOTE PNL MA CLR	IOC	43	06
MA CLR RTN	RM CSL	1	E45	r	IOC	43	06
STOP 5 SELECT	RM CSL	1	E1	STOP 5 (R)	CP	190	12
STOP 5 RTN	RM CSL	1	E31	RETURN 1	CP	191	26
STOP 6 SELECT	RM CSL	1	E3	STOP 6 (R)	CP	190	10
STOP 6 RTN	RM CSL	1	E32	RETURN 1	CP	191	26
STOP 7 SELECT	RM CSL	1	E5	STOP 7 (R)	CP	190	08
STOP 7 RTN	RM CSL	1	E33	RETURN 1	CP	191	26
JUMP 1 SEL	RM CSL	1	E7	JUMP 1 (R)	CP	191	12
JUMP 1 RTN	RM CSL	1	E34	RETURN 2	CP	190	26
JUMP 2 SEL	RM CSL	1	E9	JUMP 2 (R)	CP	191	10
JUMP 2 RTN	RM CSL	1	E35	RETURN 2	CP	190	26
JUMP 3 SEL	RM CSL	1	E11	JUMP 3 (R)	CP	191	08
JUMP 3 RTN	RM CSL	1	E36	RETURN 2	CP	190	26
STOP SEL	RM CSL	1	E23	MANUAL STOP (R)	CP	191	17
STOP RTN	RM CSL	1	E42	RETURN 2	CP	190	26
RUN NEUTRAL SEL	RM CSL	1	E27	NEUTRAL (R)	CP	191	14
RUN NEUTRAL RTN	RM CSL	1	E44	RETURN 2	CP	190	26

REVISIONS						
ZONE	LTR	EIR	DESCRIPTION	CHK	DATE	APPROVED
	J	D11231	REDRAWN SEE EIR	RT	1-10-74	

NOTE:

1. AN AN/UYK-7 PRINTED CIRCUIT CARD CAN BE REPLACED ONLY WITH ANOTHER PRINTED CIRCUIT CARD WITH THE SAME SEVEN DIGIT DRAWING NUMBER EXCEPT FOR THE EXCEPTIONS LISTED ON THIS DRAWING. DASH NUMBERS HAVE NO EFFECT ON INTERCHANGEABILITY.

DATA SUMMARY AN/UYK-7

LOGIC CARD REPLACEMENT CHART

USED ON ASSY	CARD TYPE	REPLACED WITH	INTERCHANGEABLE WITH	REMARKS
7073214	7111435	NONE	7111436	
	7111436	NONE	7111435	
7073304	7113020	7113021	NONE	NON-INTERCHANGEABLE DUE TO TEMPERATURE LIMITATIONS ONLY
	7113021	NONE	NONE	
	7113025	7113026	NONE	NON-INTERCHANGEABLE DUE TO TEMPERATURE LIMITATIONS ONLY
	7113026	NONE	NONE	
	7113030	7113031	NONE	
	7113031	NONE	NONE	
	7113035	7113036	NONE	
	7113036	NONE	NONE	
	7113050	7113051	NONE	
	7113051	NONE	NONE	
	7113055	7113056	NONE	
	7113056	NONE	NONE	
	7113060	7113061	NONE	
	7113061	NONE	NONE	
	7113385	7113386	NONE	
	7113386	NONE	NONE	
	7113515	7113516	NONE	NON-INTERCHANGEABLE DUE TO TEMPERATURE LIMITATIONS ONLY
	7113516	NONE	NONE	

CHANGE 2

NEXT ASSY	USED ON
APPLICATION	

UNLESS OTHERWISE SPECIFIED
DIMENSIONS IN INCHES TOL ON
2 PLACE DECIMALS ± /
3 PLACE DECIMALS ± /
ANGLES ± /
HOLE DIA TOL
0 THRU .250 + .003 − .002
.251 THRU .500 + .005 − .003
.501 AND LARGER + .010 − .005
THREADS: EXT CL 2A, INT CL 2B

PART NO.

CONTRACT NO.

LAYOUT	F. AHL	5-26-71
DRAWN	R. THOMSEN	6-9-71
CHECKED	F.A.	6-17-71
ENGR	A. OROSZ A.J.O.	6-18-71
ENGR		
APPROVED	E. KOWALSKI	6-18-71

~~FOR MATL REQUIREMENTS SEE PL~~

UNIVAC | FEDERAL SYSTEMS DIVISION
UNIVAC PARK, P.O. BOX 3525, ST. PAUL, MINN. 55101

TITLE
CARD INTERCHANGEABILITY LISTING

SIZE	CODE IDENT	DWG NO.
D	90536	7073474

SCALE NONE | CLASS A | SHEET 1 OF 1

SPERRY RAND

DWG. NO. 7073474

UD1-8334

PART NUMBER	APPLICABLE SHEETS
7073250-00	1

REVISIONS						
ZONE	LTR	EIR	DESCRIPTION	CHK	DATE	APPROVED

LOGIC SYMBOLOGY

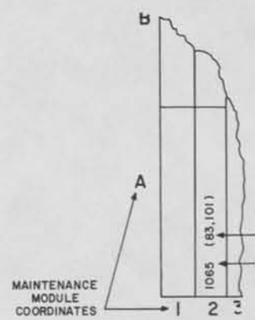

MAINTENANCE MODULE LOCATION DIAGRAM DETAIL

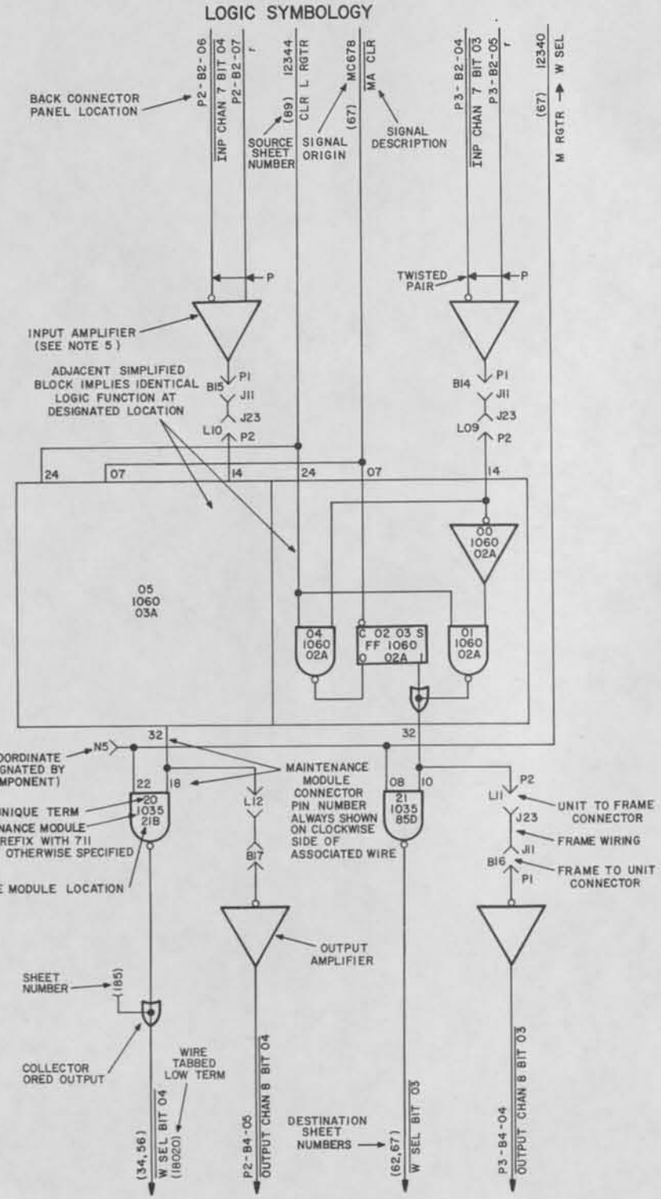

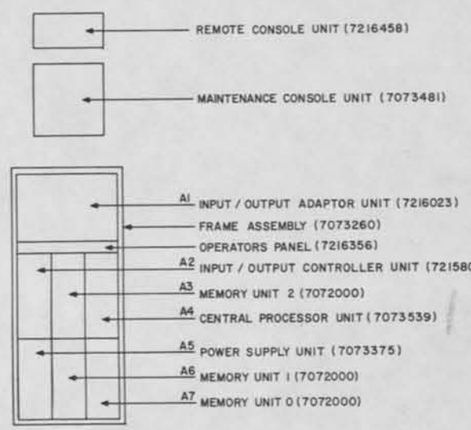

ASSEMBLY BREAKDOWN (FRONT VIEW) BASIC SINGLE BAY CONFIGURATION

NOTE:

1. THE CIRCUIT SHOWN AT LEFT IS FOR ILLUSTRATION ONLY. IT IS NOT AN ACTUAL CIRCUIT.
2. "→" IMPLIES "IS TRANSFERRED TO".
3. "—" INDICATES NOT OR PRIME CONDITION.
4. COMMON NON-STANDARD ABBREVIATIONS - FOR COMPLETE LIST REFER TO ABBREVIATIONS LIST IN MILITARY STANDARD 12-C.

AKU	-	AK REGISTER UPPER
AKL	-	AK REGISTER LOWER
ASYNC	-	ASYNCHRONOUS
AT0	-	ARITHMETIC TIMING 0
AT1	-	ARITHMETIC TIMING 1
AT2	-	ARITHMETIC TIMING 2
BP	-	BREAKPOINT
BSE	-	BUFFER SEQUENCE ENABLES
CA	-	CHARACTER ADDRESSING
CAR	-	COMMAND ADDRESS REGISTER
CARA	-	COMMAND ADDRESS REGISTER ACTIVE
CIR	-	COMMAND INTERFACE REGISTER
CM	-	CONTROL MEMORY
CMA	-	CONTROL MEMORY ADDRESS
CMAR	-	CONTROL MEMORY ADDRESS REGISTER
CMP	-	CONTROL MEMORY POINTER
CP	-	CENTRAL PROCESSOR
CTL	-	CONTROL
DIR	-	DATA INTERFACE REGISTER
EAB	-	END-AROUND BORROW
EF	-	EXTERNAL FUNCTION
EH	-	EARLY HOLD
EI	-	EXTERNAL INTERRUPT
ESA	-	EXTERNALLY SPECIFIED ADDRESS
ESI	-	EXTERNALLY SPECIFIED INDEX
EX OR	-	EXCLUSIVE OR
FPD	-	FLOATING POINT DIVIDE
HPI	-	HIGH PRIORITY INTERRUPT
I	-	INSTRUCTION
IA	-	INDIRECT ADDRESSING
IC	-	INTERCOMPUTER
ICW	-	INITIAL CONDITION WORDS
ILR	-	INTERRUPT LOCKOUT REGISTER
IMR	-	I MEMORY REQUEST
IOC	-	INPUT/OUTPUT CONTROLLER
KL	-	K REGISTER LOWER
KU	-	K REGISTER UPPER
L/O	-	LOCKOUT
LH	-	LATE HOLD
LPI	-	LOW PRIORITY INTERRUPT
LSO	-	LOW SPEED OSCILLATOR
MLO	-	MEMORY LOCKOUT
MMAR	-	MAIN MEMORY ADDRESS REGISTER
MT	-	MAIN TIMING
NSC	-	NORMALIZED SHIFT COUNT
OMR	-	O MEMORY REQUEST
OP	-	OPERAND
ORR	-	OPERAND REQUEST REGISTER
PFI	-	POWER FAULT INTERRUPT
PRI	-	PRIMARY
PRI	-	PRIORITY
PRIV	-	PRIVILEGED
PROC	-	PROCESSOR
PROG	-	PROGRAM
R/W	-	READ/WRITE
REQSTOR	-	REQUESTOR
ROM	-	READ ONLY MEMORY
RTC	-	REAL TIME CLOCK
SCR	-	SHIFT COUNT REGISTER
SL	-	SENSE LINE
SN	-	SHIFT NETWORK
SS	-	SINGLE SHOT
STR	-	STORE
SUB	-	SUBTRACTOR
TM	-	INTERNAL INTERRUPT CODE
WFI	-	WAIT FOR INTERRUPT
XDT	-	X DRIVE TRANSFORMER
XLTN	-	TRANSLATION
YDT	-	Y DRIVE TRANSFORMER

5. OUTPUT IS HIGH IF INPUTS ARE THE SAME VOLTAGE LEVEL. OUTPUT IS LOW IF INPUTS ARE NOT THE SAME VOLTAGE LEVEL.

6. All notes are H ⇒ the condition

PART NO.

~~FOR MATL REQUIREMENTS SEE PL~~

NEXT ASSY	USED ON
APPLICATION	

UNLESS OTHERWISE SPECIFIED
DIMENSIONS IN INCHES TOL ON

2 PLACE DECIMALS	3 PLACE DECIMALS	ANGLES
±	±	±

HOLE DIA TOL

0 THRU .250	.251 THRU .500	.501 AND LARGER
+ .003 − .002	+ .005 − .003	+ .010 − .005

THREADS: EXT CL 2A, INT CL 2B

CONTRACT NO.

LAYOUT		
DRAWN	J. ROBINSON	9-30-70
CHECKED		10-26-70
ENGR		10-27-70
ENGR		
APPROVED	D.M. Widenman	10-27-70

UNIVAC | FEDERAL SYSTEMS DIVISION
UNIVAC PARK, P.O. BOX 3525, ST. PAUL, MINN. 55101

TITLE
FUNCTIONAL SCHEMATIC, AN / UYK-7 COMPUTER

SIZE	CODE IDENT	DWG NO.
D	90536	7216450

SCALE | CLASS A | SHEET | OF

DWG. NO. 7216450

UD1-2534

SPERRY RAND

CENTRAL
PROCESSOR

PART NUMBER	APPLICABLE SHEETS
7073310	1-234

SHEET INDEX

SHEET	REV	FIG. NO.	FUNCTIONAL DESCRIPTION
1	CL	-	CENTRAL PROCESSOR SHEET INDEX
2		001	CENTRAL PROCESSOR, BLOCK DIAGRAM
3	CL	003, 004	CENTRAL PROCESSOR CARD PLACEMENT, PART 1
4	BZ	004, 005	CENTRAL PROCESSOR CARD PLACEMENT, PART 2
5	CA	-	TEST POINT BLOCK (CENTRAL PROCESSOR)
6	Y	150	CENTRAL PROCESSOR, BACK CONNECTOR PANEL (P2)
7		150	CENTRAL PROCESSOR, BACK CONNECTOR PANEL (P3)
8	CL	149	POWER AND TEMPERATURE CONTROLS
9	CK	060	F OCTAL TRANSLATOR 1
10	BT	061	F OCTAL TRANSLATOR 2
11	BT	062	F OCTAL TRANSLATOR 3
12	BV	063	F TRANSLATOR 1
13	CK	064	F TRANSLATOR 2
14	CA	065	F TRANSLATOR 3
15	CA	066	F TRANSLATOR 4
16	CC	067	F TRANSLATOR 5
17	CA	068	F TRANSLATOR 6
18	CC	091	F TRANSLATOR 7
19	CA	092	F TRANSLATOR 8
20	BC	069	V OCTAL TRANSLATOR
21	BT	070	V TRANSLATOR 1
22	AN	071	V TRANSLATOR 2
23	CK	072	V TRANSLATOR 3
24	AK	073	V TRANSLATOR 4
25	BT	097	V TRANSLATOR 5
26		098	V SELECTOR, K TRANSLATOR
27	CG	074	ACCUMULATOR CONTROL 1
28	CK	075	ACCUMULATOR CONTROL 2
29	CA	076	ACCUMULATOR CONTROL 3
30	CK	077	ACCUMULATOR CONTROL & DELAY LINE
31		078	SHIFT CONTROL 1
32	CA	079	SHIFT CONTROL 2
33	CA	080	X REGISTER & MULTIPLIER CONTROL
34	CA	081	S & X SELECTOR CONTROL
35	CC	082	D, Q, W & Z SELECTOR CONTROL
36	BR	083	M REGISTER & Q SELECTOR CONTROL
37	CA	084	D & Q REGISTER CONTROL
38	CA	085	W & Z REGISTER CONTROL
39	CA	086	MISCELLANEOUS ARITHMETIC CONTROL 1
40	CA	087	ARITHMETIC DETECTION CIRCUIT 1
41	CG	088	ARITHMETIC DETECTION CIRCUIT 2
42	CG	089	ARITHMETIC DETECTION CIRCUIT 3
43	CA	090	ARITHMETIC DETECTION CIRCUIT 4
44	CB	093	MISCELLANEOUS ARITHMETIC CONTROL 2
45	BT	094	K FANOUT & COMBINATION
46	BU	095	CONTROL MEMORY ARITHMETIC SELECT
47	CG	096	ARITHMETIC TIMING 0 & 1
48	CK	099	SHIFT ENABLE & SCR SELECT
49	CA	100	NORMALIZE
50	CK	101	ARITHMETIC CLOCK CONTROL
51	CD	102	EARLY HOLD CONTROL
52	CA	103	ARITHMETIC COMMANDS 1
53	CA	104	ARITHMETIC COMMANDS 2
54	CG	115	Y, P*, BP REGISTER & BP, Y COMPARE, BITS 00-05
55	CA	114, 115	Y, P*, BP REGISTER & BP, Y COMPARE, BITS 06-11
56	CA	114	Y, P*, BP REGISTER & BP, Y COMPARE, BITS 12-17
57	CF	117, 118	STATUS REGISTER, BITS 00-11
58	CA	116, 117	STATUS REGISTER, BITS 12-19
59		120	P&R REGISTER, P&R COMPARISONS, 1/2 C REGISTER→CONTROL MEMORY, BITS 00 02-04
60		120	P&R REGISTER, P&R COMPARISONS, 1/2 C REGISTER→CONTROL MEMORY, BITS 01 05-07
61		119	P&R REGISTER, P&R COMPARISONS, 1/2 C REGISTER→CONTROL MEMORY, BITS 08-11
62		119	P&R REGISTER, P&R COMPARISONS, 1/2 C REGISTER→CONTROL MEMORY, BITS 12-15
63		121	P, R & H REGISTERS, BITS 17-19
64	CA	123	H REGISTER, G CONTROL MEMORY, BITS 00-03, MLO CHECK
65	CA	123	H REGISTER, G CONTROL MEMORY, BITS 04-07, MLO CHECK
66	CA	122	H REGISTER, G CONTROL MEMORY, BITS 08-11, MLO CHECK
67	CA	122	H REGISTER, G CONTROL MEMORY, BITS 12-15, MLO CHECK
68	CA	124	G CONTROL MEMORY BITS 16-21
69		125	B CONTROL MEMORY, BITS 00-07
70	AF	125	B CONTROL MEMORY, BITS 08-15
71	BU	124	B CONTROL MEMORY, BITS 17-19
72		126	1/2 C REGISTER→CONTROL MEMORY
73	CA	127	MISCELLANEOUS CONTROL MEMORY, BITS 18, 19, C REGISTER→CONTROL MEMORY
74		130	S CONTROL MEMORY, MISCELLANEOUS CONTROL MEMORY, BITS 00-02
75		130	S CONTROL MEMORY MISCELLANEOUS CONTROL MEMORY, BITS 03-05
76		129	S CONTROL MEMORY, MISCELLANEOUS CONTROL MEMORY, BITS 06-08
77		129	S CONTROL MEMORY, MISCELLANEOUS CONTROL MEMORY, BITS 09-11
78		128	S CONTROL MEMORY, MISCELLANEOUS CONTROL MEMORY, BITS 12-14
79	AF	128	S CONTROL MEMORY, MISCELLANEOUS CONTROL MEMORY, BITS 15-17
80		131	B+Y ADDER, U REGISTER SELECTOR, ±1 SELECTOR, (PART 1)
81		131	B+Y ADDER, U REGISTER SELECTOR, ±1 SELECTOR, (PART 2)
82		131	B+Y ADDER, U REGISTER SELECTOR, ±1 SELECTOR, (PART 3)
83		131	B+Y ADDER, U REGISTER SELECTOR, ±1 SELECTOR, (PART 4)
84		131	B+Y ADDER, U REGISTER SELECTOR, ±1 SELECTOR, (PART 5)
85		132	BASE ADDER W/O CARRY, PART 1
86		132	BASE ADDER W/O CARRY, PART 2
87		132	BASE ADDER W/O CARRY, PART 3
88	CA	133	BASE ADDER CARRY
89		151	X REGISTER, D, X&Q SELECTORS, BITS 00-03
90	CA	151	Q SELECTOR, ACCUMULATORS & C SELECTOR BITS 00-03
91		152	X REGISTER, D, X&Q SELECTORS, BITS 04-07
92	CA	152	Q SELECTOR, ACCUMULATORS & C SELECTOR BITS 04-07
93		153	X REGISTER, D, X&Q SELECTORS, BITS 08-11
94	CA	153	Q SELECTOR, ACCUMULATORS & C SELECTOR BITS 08-11
95		154	X REGISTER, D, X&Q SELECTORS, BITS 12-15
96	CA	154	Q SELECTOR, ACCUMULATORS & C SELECTOR BITS 12-15
97		155	X REGISTER, D, X&Q SELECTORS, BITS 16-19
98	CA	155	Q SELECTOR, ACCUMULATORS & C SELECTOR BITS 16-19
99	CA	156	X REGISTER, D, X&Q SELECTORS, BITS 20-23
100	CA	156	Q SELECTOR, ACCUMULATORS & C SELECTOR BITS 20-23
101		157	X REGISTER, D, X&Q SELECTORS, BITS 24-27
102	CA	157	Q SELECTOR, ACCUMULATORS & C SELECTOR BITS 24-27
103		158	X REGISTER, D, X&Q SELECTORS, BITS 28-31
104	CA	158	Q SELECTOR, ACCUMULATORS & C SELECTOR BITS 28-31
105	CA	170	U REGISTER UPPER & LOWER, BITS 00, 01, 16 & 17
106	CK	170	U REGISTER UPPER & LOWER, BITS 02, 03 18 & 19
107	CA	170	U REGISTER UPPER & LOWER, BITS 04, 05 20 & 21
108	CA	170	U REGISTER UPPER & LOWER, BITS 06, 07 22 & 23
109	CA	171	U REGISTER UPPER & LOWER, BITS 08, 09 24 & 25
110	CA	171	U REGISTER UPPER & LOWER, BITS 10, 11 26 & 27
111	CA	171	U REGISTER UPPER & LOWER, BITS 12, 13 28 & 29
112	CA	171	U REGISTER UPPER & LOWER, BITS 14, 15 30 & 31
113	CA	172	ARITHMETIC REGISTER 1, BITS 00-03 (PART 1)
114		172	ARITHMETIC REGISTER 1, BITS 00-03 (PART 2)
115		173	ARITHMETIC REGISTER 1, BITS 04-07 (PART 1)
116		173	ARITHMETIC REGISTER 1, BITS 04-07 (PART 2)
117		174	ARITHMETIC REGISTER 1, BITS 08-11 (PART 1)
118		174	ARITHMETIC REGISTER 1, BITS 08-11 (PART 2)
119		175	ARITHMETIC REGISTER 1, BITS 12-15 (PART 1)
120		175	ARITHMETIC REGISTER 1, BITS 12-15 (PART 2)
121		176	ARITHMETIC REGISTER 1, BITS 16-19 (PART 1)
122		176	ARITHMETIC REGISTER 1, BITS 16-19 (PART 2)
123	CA	177	ARITHMETIC REGISTER 1, BITS 20-23 (PART 1)
124		177	ARITHMETIC REGISTER 1, BITS 20-23 (PART 2)
125		178	ARITHMETIC REGISTER 1, BITS 24-27 (PART 1)
126		178	ARITHMETIC REGISTER 1, BITS 24-27 (PART 2)
127	CA	179	ARITHMETIC REGISTER 1, BITS 28-31 (PART 1)
128		179	ARITHMETIC REGISTER 1, BITS 28-31 (PART 2)
129		180	SUBTRACTOR, BITS 00-03
130		180	SUBTRACTOR, BITS 04-07
131		180	SUBTRACTOR, BITS 08-11
132		180	SUBTRACTOR, BITS 12-15
133		181	SUBTRACTOR, BITS 16-19
134		181	SUBTRACTOR, BITS 20-23
135		181	SUBTRACTOR, BITS 24-27
136		181	SUBTRACTOR, BITS 28-31
137		182	SHIFT COUNT REGISTER, BITS 00, 01
138		182	SHIFT COUNT REGISTER, BITS 02, 03
139	CA	182	SHIFT COUNT REGISTER, BITS 04, 05
140		183	SHIFT NETWORK 1, PART 1
141		183	SHIFT NETWORK 1, PART 2
142		183	SHIFT NETWORK 1, PART 3
143		183	SHIFT NETWORK 1, PART 4
144		184	SHIFT NETWORK 1, PART 5
145		184	SHIFT NETWORK 1, PART 6
146		184	SHIFT NETWORK 1, PART 7
147		184	SHIFT NETWORK 1, PART 8
148		185	SHIFT NETWORK 2, PART 1
149		185	SHIFT NETWORK 2, PART 2
150		185	SHIFT NETWORK 2, PART 3
151		185	SHIFT NETWORK 2, PART 4
152		186	SHIFT NETWORK 2, PART 5
153		186	SHIFT NETWORK 2, PART 6
154		186	SHIFT NETWORK 2, PART 7
155		186	SHIFT NETWORK 2, PART 8
156		187	SHIFT NETWORK 3, PART 1
157		187	SHIFT NETWORK 3, PART 2
158		187	SHIFT NETWORK 3, PART 3
159		187	SHIFT NETWORK 3, PART 4
160		188	SHIFT NETWORK 3, PART 5
161	CA	188	SHIFT NETWORK 3, PART 6
162		188	SHIFT NETWORK 3, PART 7
163		188	SHIFT NETWORK 3, PART 8
164		189	M REGISTER & OP BUS BITS 00-02
165		189	M REGISTER & OP BUS BITS 03-04
166		189	M REGISTER & OP BUS BITS 05-07
167		189	M REGISTER & OP BUS BITS 08-09
168		190	M REGISTER & OP BUS BITS 10-12
169		190	M REGISTER & OP BUS BITS 13-15
170		190	M REGISTER & OP BUS BITS 16-17
171		191	M REGISTER & OP BUS BITS 20-22
172	CA	191	M REGISTER & OP BUS BITS 23-24
173	CA	191	M REGISTER & OP BUS BITS 25-27
174		191	M REGISTER & OP BUS BITS 28-29
175		190	M REGISTER & OP BUS BITS 30-31
176	CA	192	M REGISTER BITS 18 — 19 AND WRITE BYTE 2
177		194	ROM LINE SELECTIONS
178	CK	194	CURREN SWITCH
179		195	ROPE MEMORY STACK
180	CA	196	K REGISTER BITS 01-04, K* REGISTER BITS 00, 01
181	CA	197	K REGISTER BITS 05-08, K* REGISTER BITS 02, 03
182		198	K REGISTER BITS 09-12, K* REGISTER BITS 04, 05
183	CE	199	V & F REGISTERS, PARITY, (PART 1)
184	CA	199	V & F REGISTERS, PARITY, (PART 2)
185	CA	200	V & F REGISTERS, PARITY, (PART 3)
186	CA	200	V & F REGISTERS, PARITY, (PART 4)
187	BC	201	V & F REGISTER DRIVE
188	CK	210	CONTROL CLOCK
189	CA	211	MAIN TIMING
190	AY	212	CONSOLE INPUT 1
191	AY	213	CONSOLE INPUT 2
192		214	CONSOLE SELECTORS
193	AT	215	CONSOLE CONTROL MEMORY REGISTER & CONTROL MEMORY SELECTOR
194	CA	216	RUN, START, CONSOLE SEQUENCE
195	CA	217	CONSOLE CYCLE AND STOP INDICATORS
196	CA	218	TIME-OUT & MONITOR CLOCK
197	CK	219	SEQUENCE HOLD & STOP ENABLE
198	CA	220	SEQUENCE REQUEST ENABLES
199	BC	221	SEQUENCER T + IA
200	CA	222	SEQUENCER OP 1 & OP 2
201	CH	223	ADDRESS FORMATION CONTROL 1
202	CG	224	ADDRESS FORMATION CONTROL 2
203	CA	225	B CONTROL MEMORY ADDRESS SELECTOR
204	CH	226	S CONTROL MEMORY ADDRESS SELECTOR
205		227	G CONTROL MEMORY ADDRESS SELECTOR
206	CA	228	MISCELLANEOUS CONTROL MEMORY ADDRESS SELECTOR
207	CA	229	U REGISTER CONTROL
208	CA	230	REPEAT DESIGNATOR & REPEAT REGISTER
209	CA	231	C REGISTER CONTROL 1
210	CA	232	C REGISTER CONTROL 2
211	CA	233	REGISTER COMMANDS
212	CA	234	ARITHMETIC→CONTROL COMMANDS
213	CA	235	ARITHMETIC CONTROL MEMORY COMMANDS
214	CG	236	CLEAR STATUS & REI
215	AT	237	U TRANSLATION 1
216	W	238	U TRANSLATION 2
217	CA	239	MISCELLANEOUS U TRANSLATION
218	CE	240	BP 3 MLO ERRORS
219	CA	241	INTERRUPT CONTROL 1
220	BM	247	INTERRUPT CONTROL 2
221	BJ	242	STATE REGISTER
222	BC	243	SYNCHRONOUS 1
223	BC	244	SYNCHRONOUS 2
224	CA	245	CLASS I INTERRUPT
225	CA	246	CLASS III INTERRUPT
226	BM	248	OPERAND REQUEST REGISTER
227	CA	249	OPERAND REQUEST REGISTER→M REGISTER
228	BC	250	I BUS MEMORY CONTROL
229	Y	251	MEMORY REQUEST I BUS
230		252	OP BUS MEMORY CONTROL
231	BM	253	OP MEMORY REQUEST BUS
232	CJ	254	READ ONLY MEMORY CONTROL
233		255	ROM ADDRESS SELECTOR
234	CA	256	MASTER CLEAR

REVISIONS

ZONE	LTR	EIR	DESCRIPTION	CHK	DATE	APPROVED
	BT	D06552	REDRAWN - SEE EIR	[illegible]	2-17-72	[illegible]
	BU	D06551	SEE EIR	[illegible]	2-18-72	[illegible]
	BV	D06076	SEE EIR	[illegible]	2-18-72	[illegible]
	BW	D06597	SEE EIR	[illegible]	2-18-72	[illegible]
	BY	D06632	SEE EIR	[illegible]	2-18-72	[illegible]
	BZ	D06618	SEE EIR	[illegible]	2-18-72	[illegible]
	CA	D06588	SEE EIR	[illegible]	12-18-72	[illegible]
	CB	D08599	SEE EIR	[illegible]	2-16-73	[illegible]
	CC	D06701	SEE EIR	[illegible]	7-18-73	[illegible]
	CD	D06704	SEE EIR	[illegible]	7-19-73	[illegible]
	CE	D07197	SEE EIR	[illegible]	7-19-73	[illegible]
	CF	D09563	SEE EIR	[illegible]	7-19-73	[illegible]
	CG	D10463	SEE EIR	[illegible]	10-9-73	[illegible]
	CH	D07732	SEE EIR	[illegible]	12-12-73	[illegible]
	CJ	D10544	SEE EIR	[illegible]	12-12-73	[illegible]
	CK	D09611	SEE EIR	[illegible]	12-27-73	[illegible]
	CL	D11335	SEE EIR	JK	1-24-74	[illegible]

CHANGE 2

PART NO.

~~FOR MATL REQUIREMENTS SEE PL~~

NEXT ASSY	USED ON
APPLICATION	

UNLESS OTHERWISE SPECIFIED
DIMENSIONS IN INCHES TOL ON
2 PLACE DECIMALS ± | 3 PLACE DECIMALS ± | ANGLES ±
HOLE DIA TOL
0 THRU .250 +.003 −.002 | .251 THRU .500 +.005 −.003 | .501 AND LARGER +.010 −.005
THREADS: EXT CL 2A, INT CL 2B

CONTRACT NO.

LAYOUT		
DRAWN	BILL AXTELL	9/17/70
CHECKED	[illegible] KAB	10/30/70
ENGR	W.D. Bauer	10-3?-70
ENGR		
APPROVED	D M Widmer	10-30-70

UNIVAC | FEDERAL SYSTEMS DIVISION
UNIVAC PARK, P.O. BOX 3525, ST. PAUL, MINN. 55101

TITLE
FUNCTIONAL SCHEMATIC, CENTRAL PROCESSOR ASSEMBLY—UYK-7

SIZE	CODE IDENT	DWG NO.
D	90536	7073539

SCALE | CLASS A | SHEET 1 OF 234

CK CL

SPERRY RAND

DWG. NO. 7073539

UD1-2534

ZONE	LTR	EIR	DESCRIPTION	CHK	DATE	APPROVED
			REVISIONS			

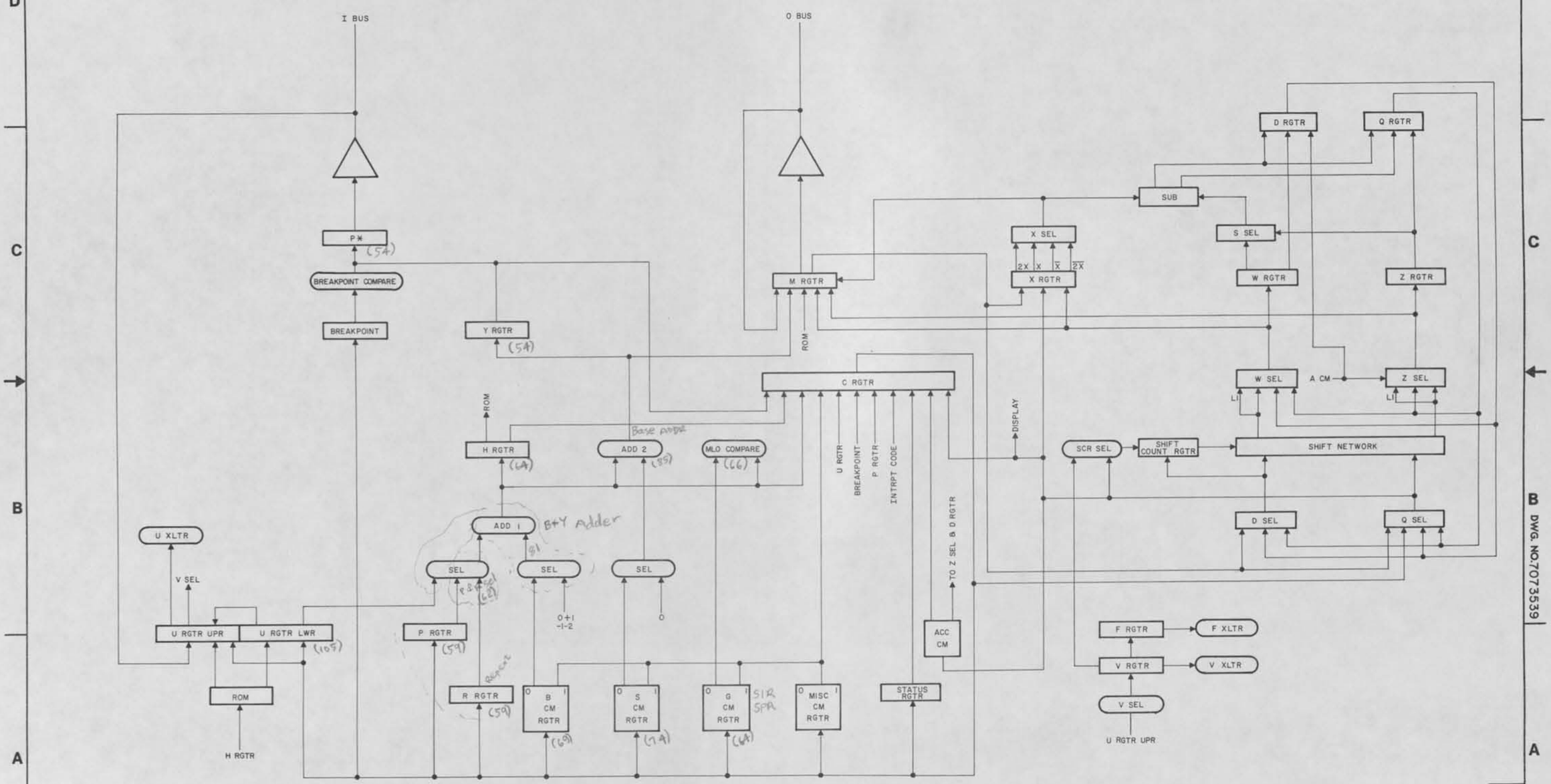

CENTRAL PROCESSOR, BLOCK DIAGRAM 001

SIZE	CODE IDENT	DWG NO.
D	90536	7073539
SCALE	CLASS A	SHEET 2

DWG. NO. 7073539

UD 1-8534C

REVISIONS						
ZONE	LTR	EIR	DESCRIPTION	CHK	DATE	APPROVED
	Y	D03399	SEE EIR	CAB	6-30-71	[illegible]
	Z	D03599	SEE EIR	KAB	7-1-71	[illegible]
	AC	D05087	SEE EIR	RW	1-21-72	[illegible]
	AE	D04734	SEE EIR	RW	1-26-72	[illegible]
	AG	D05091	SEE EIR	RW	1-28-72	[illegible]
	AH	D04915	SEE EIR	RW	1-28-72	[illegible]
	AK	D05145	SEE EIR	RW	2-1-72	[illegible]
	AL	D05168	SEE EIR	RW	2-1-72	[illegible]
	AM	D05722	SEE EIR	RW	2-1-72	[illegible]
	AN	D05753	SEE EIR	RW	2-2-72	[illegible]
	AP	D05167	SEE EIR	RW	2-2-72	[illegible]
	AR	D04714	SEE EIR	RW	2-3-72	[illegible]
	AT	D05729	SEE EIR	RW	2-3-72	[illegible]
	AU	D05750	SEE EIR	RW	2-4-72	[illegible]
	AV	D05780	SEE EIR	RW	2-4-72	[illegible]
	AW	D05759	SEE EIR	RW	2-7-72	[illegible]
	AY	D05804	SEE EIR	RW	2-8-72	[illegible]
	AZ	D05882	SEE EIR	RW	2-9-72	[illegible]
	BB	D05858	SEE EIR	RW	2-9-72	[illegible]
	BC	D05859	SEE EIR	[illegible]	[illegible]	[illegible]
	BD	D06049	SEE EIR	[illegible]	2-18-72	[illegible]
	BE	D06054	SEE EIR	[illegible]	[illegible]	[illegible]
	BG	D06080	SEE EIR	[illegible]	2-12-72	[illegible]
	BJ	D06509	SEE EIR	RW	2-14-72	[illegible]
	BK	D06510	SEE EIR	RW	2-14-72	[illegible]
	BL	D06511	SEE EIR	RW	2-15-72	[illegible]
	BM	D06512	SEE EIR	RW	2-15-72	[illegible]
	BN	D06513	SEE EIR	RW	2-15-72	[illegible]
	BP	D06515	SEE EIR	RW	2-16-72	[illegible]
	BR	D06514	SEE EIR	RW	2-16-72	[illegible]
	BT	D06552	SEE EIR	RW	2-17-72	[illegible]
	BV	D06076	SEE EIR	RW	2-18-72	[illegible]
	BW	D06597	SEE EIR	RW	2-18-72	[illegible]
	BZ	D06618	SEE EIR	RW	2-18-72	[illegible]
	CA	D06588	SEE EIR	[illegible]	[illegible]	[illegible]
	CC	D06701	SEE EIR	[illegible]	7-18-73	[illegible]
	CD	D06704	SEE EIR	[illegible]	7-19-73	[illegible]
	CE	D07197	SEE EIR	[illegible]	7-19-73	[illegible]
	CH	D07732	SEE EIR	[illegible]	[illegible]	[illegible]
	CJ	D10544	SEE EIR	[illegible]	[illegible]	[illegible]
	CK	D09611	SEE EIR	[illegible]	[illegible]	[illegible]
	CL	D11335	SEE EIR	JH	[illegible]	[illegible]

NOTE:
1. UNLESS OTHERWISE SPECIFIED PREFIX ALL CENTRAL PROCESSOR MODULE PART NUMBERS WITH 711____
2. FOR PRINTED CIRCUIT INTERCHANGEABILITY DATA REFER TO DRAWING 7073474.

Slot	A	B	C
01	2891 (37, 215, 39)	1490 (8,15,29,196,212,217,228,198)	POWER CONVERTER (8) A1 7217069 TYPE D (slots 01–35)
02	2895 (216)	1965 (16)	
03	2335 (43,197,50,230,200,217,228,232)	1890 (15)	
04	1970 (17)	1886 (14,19,44)	
05	1750 (41,196,197,201,214,221,188,228,37)	1605 (13)	
06	2290 (39,41,43,45,64,176,189,197,201,208,217,218,230,15,16)	1895 (12)	
07	2335 (44,58,196-198,210,211,214,220,234)	1610 (11,13,58)	
08	1750 (12,39,41,44,51,57,176,200,219,220,234,228)	1610 (10,13-15,16,19,21,26,29)	
09	2335 (49,123,164-166,175,183,197,199,209,213)	1610 (9,12-15,209)	
10	2335 (19,36,44,45,98,201,211,218,221,227,198)	2315 (18)	
11	1750 (19,34,39,45,175,187,211)	3350 (24)	
12	2290 (6,21,25,46,53,57,185,187,196,197,199,202,207,210,214,217)	3346 (23,49)	
13	2290 (187,198)	3340 (22)	
14	2290 (57,111,112,121,126,128,139,140,142,156,157,187)	1955 (21)	
15	2290 (18,19,22,30,32,39,40,50,68,105,106,142,187,217)	1610 (15,20,21,49,127)	
16	1750 (14,21,39,44,51,58,200,202,207,215,217,218)	1755 (19,25,30,39,49,153,211)	
17	2290 (43,187,188,189,196,198-200,202,208,210,214,217-220,234)	1755 (19,25,45,49,153,208)	
18	2970 (202,206,211,214,217)	1755 (19,44,45,49,50,152,221,232)	
19	2850 (199,204,229,233)	2962 (51)	
20	2850 (200,203,210,229,233)	2320 (48)	
21	2880 (196,232,233)	2310 (26,44)	
22	2910 (218)	2331 (50,30)	
23	2917 (193,214,219)	7217061 (47) (slots 23–24)	
24	2927 (217,219,221)		
25	2298 (197,219,220,226,227,231)	7217061 (47) (slots 25–26)	
26	2931 (57-60,195,208,211,234)		
27	2941 (199,201,202,220,228,230)	2975 (48,52)	
28	2965 (80,195,196,201,202,204,211,225)	2980 (53)	
29	2950 (212)	2036 (21,39,47,186,217)	
30	2935 (213)	2036 (25,39,185,208)	
31	3526 (194,207)	2036 (16,25,35,45,184)	
32	2887 (208,210)	2036 (25,43,45,180,183)	
33	2907 (197,198,221)	2081 (34)	
34	2900 (188,198,202)	1750 (15,19,32,34,38,45,71,197)	
35	2876 (195,209,210)	2025 (45,182,214)	
36	7071867 (188) (slots 36–37)	2025 (19,45,181)	2990 (8)
37		2025 (45,180)	1675 (125,139,234)
38	2112 (58,206,219,221,225,226)	2045 (32)	1635 (160,161)
39	2112 (58,206,219,221,224,226)	2040 (31,188)	1635 (162,163)
40	1750 (25,39,68,164,186,188,189,194,199,210,213,225)	1482 (43)	1635 (156,157)
41	2865 (73,80,201)	1476 (42)	1635 (158,159)

CENTRAL PROCESSOR
CARD PLACEMENT, PART I

003
004

SIZE	CODE IDENT	DWG NO.
D	90536	7073539
SCALE	CLASS A	SHEET 3

DWG. NO. 7073539

CHANGE 2

UD 1-8534C

	A		B		C	
44	2050	(189, 192, 196)	1451	(28, 41, 42)	1675	(16, 138, 173)
45	2050	(189, 192, 232)	1446	(40)	1635	(152, 153)
46	2845	(193, 205, 206)	2106	(38)	1635	(154, 155)
47	2845	(46, 193, 203, 204)	2077	(33)	1635	(148, 149)
48	2855	(68, 204 - 206)	2096	(35, 113)	1635	(150, 151)
49	2855	(68, 204 - 206)	2090	(37)	1675	(137, 173, 174, 227)
50	2870	(71, 196, 203)	2290	(30, 40, 45, 49, 98, 187, 225, 226)	1635	(144, 145)
51	2860	(63, 84, 202, 229)	2985	(30, 39, 49, 188, 220)	1635	(146, 147)
52	2825	(54, 57, 74, 201)	2101	(36)	1635	(140, 141)
53	2835	(74, 85, 88, 189, 202)	7216965	(30)	1635	(142, 143)
54	2830	(63, 64, 88)			2010	(127)
55	2820	(59, 69, 197)	2065	(29)	2010	(128)
56	2840	(73, 84, 203, 209, 210, 233)	2061	(28)	2015	(103)
57	2825	(54, 57, 75, 226)	2055	(27)	2010	(125)
58	2835	(30, 75, 85, 88, 214)	1655	(125, 127, 136, 181)	2010	(126)
59	2840	(72, 83, 88, 185, 189, 209, 210)	1655	(127, 128, 135, 161)	2015	(101)
60	2830	(65, 88, 193)	1655	(32, 49, 134, 203)	2010	(123)
61	2820	(60, 69, 88)	1655	(45, 49, 133, 214)	2010	(124)
62	2825	(45, 55, 57, 76)	1655	(30, 49, 132)	2015	(99)
63	2835	(76, 86, 88, 203, 210)	1655	(39, 49, 131)	2010	(121)
64	2840	(72, 82, 88, 209, 210, 211)	1655	(28, 39, 49, 130)	2010	(122)
65	2830	(66, 88, 192, 50)	1655	(30, 39, 49, 129)	2015	(97)
66	2820	(61, 70, 40)	1981	(40, 104, 200, 211)	2010	(119)
67	2840	(72, 73, 81, 202, 210)	1981	(39, 40, 49, 102, 207)	2010	(120)
68	2835	(43, 77, 86, 88, 218)	1981	(28, 49, 88, 100, 211)	2015	(95)
69	2825	(55, 57, 77, 204)	1981	(30, 98, 123, 232, 234)	2010	(117)
70	2830	(67, 88, 233)	1981	(39, 52, 96, 123, 227)	2010	(118)
71	2820	(62, 70, 211)	1981	(37, 40, 73, 94, 211)	2015	(93)
72	2840	(72, 80, 88, 201, 207, 210)	1981	(38, 197, 92, 113, 127)	2010	(115)
73	2835	(78, 85, 87, 207)	1981	(90, 113, 123, 196, 217)	2010	(116)
74	2825	(56, 58, 78, 189)	2085	(219, 222, 223, 226, 227	2015	(91)
75	2835	(79, 87, 88, 207, 30)	2085	(219, 223, 226, 227)	2010	(113)
76	2825	(56, 58, 79, 204)	1750	(28, 37, 39, 41, 49, 127, 227, 230)	2010	(114)
77	1877	(191, 194, 217)	2365	(178)	2015	(89)
78	1877	(47, 190, 194)	2370	(177)	2945	(176)
79	1692	(203, 207, 224, 228-230)	7074003 (179) A4A2		2920	(173, 174)
80	1692	(195, 229-231)			2920	(171, 172)
81	1987	(111, 112)			2920	(169, 170)
82	1987	(109, 110)			2920	(168, 175)
83	1987	(107, 108)			2920	(166, 167)
84	1987	(105, 106)	1485	(8, 28, 164, 165, 195, 217, 220, 227, 229, 234)	2920	(164, 165)

NOTE:
1. UNLESS OTHERWISE SPECIFIED PREFIX ALL CENTRAL PROCESSOR MODULE PART NUMBERS WITH 711____
2. FOR PRINTED CIRCUIT INTERCHANGEABILITY DATA REFER TO DRAWING 7073474.

REVISIONS

ZONE	LTR	EIR	DESCRIPTION	CHK	DATE	APPROVED
	U	D03206	SEE EIR	[illegible]	5-6-71	[illegible]
	Y	D03399	SEE EIR	[illegible]	6-30-71	[illegible]
	AC	D05087	SEE EIR	[illegible]	1-21-72	[illegible]
	AH	D04915	SEE EIR	[illegible]	1-28-72	[illegible]
	AJ	D05016	SEE EIR	[illegible]	1-31-72	[illegible]
	AK	D05145	SEE EIR	[illegible]	2-1-72	[illegible]
	AN	D05753	SEE EIR	[illegible]	2-2-72	[illegible]
	AR	D04714	SEE EIR	[illegible]	2-3-72	[illegible]
	AY	D05804	SEE EIR	[illegible]	2-8-72	[illegible]
	BA	D05818	SEE EIR	[illegible]	2-9-72	[illegible]
	BB	D05858	SEE EIR	[illegible]	2-10-72	[illegible]
	BG	D06080	SEE EIR	[illegible]	2-12-72	[illegible]
	BH	D06500	SEE EIR	[illegible]	2-12-72	[illegible]
	BJ	D06509	SEE EIR	[illegible]	2-14-72	[illegible]
	BK	D06510	SEE EIR	[illegible]	2-15-72	[illegible]
	BP	D06515	SEE EIR	[illegible]	2-16-72	[illegible]
	BR	D06514	SEE EIR	[illegible]	2-16-72	[illegible]
	BT	D06552	SEE EIR	[illegible]	2-17-72	[illegible]
	BZ	D06618	SEE EIR	[illegible]	2-18-72	[illegible]

CENTRAL PROCESSOR
CARD PLACEMENT, PART 2

004
005

SIZE D | CODE IDENT 90536 | DWG NO. 7073539
SCALE | CLASS A | SHEET 4

DWG. NO. 7073539

UD1-2534C

REVISIONS						
ZONE	LTR	EIR	DESCRIPTION	CHK	DATE	APPROVED
	CA	D06588	SEE EIR		12-15-72	

	A	B	C	D	E	F	G	H	J	K	L	M	N	P	R	S	T
1	(8) GND	(28,36) D RGTR → Q SEL	(8) +30 VOLTS	(8) +15 VOLTS	(28,35) Q RGTR → Q SEL	(8) +5 VOLTS	(27) ACC ADRS 2	(8) −15 VOLTS	(27) ACC ADRS 1	(27) ACC ADRS 0	(28) ENBL WRITE A	(29) ACC → D RGTR	(30) ACC ADRS 3 CTL	(30) 07726	(49) SUB=0	(91,92) Q SEL BIT 07	(91,92) Q SEL BIT 06
2	(28,36) M RGTR → Q SEL	(30,188) SA	(34) Z RGTR → SUB SEL	(34,40) DSBL EAB	(34) X RGTR → X SEL	(30) Q SEL → A RGTR	(33) M RGTR → X RGTR	(33) Q SEL → X RGTR	(33) CLR X RGTR	(33) SET X RGTR	(33) MB = 01	(33) MB = 10	(33) MB = 11	(34) W RGTR → SUB SEL	(93,94) Q SEL BIT 11	(93,94) Q SEL BIT 10	(93,94) Q SEL BIT 09
3	(8) LOW OVER TEMP IND	(8) HIGH OVER TEMP	(8) BATTLE SHORT	(43) JUMP FF	(8) OVER VOLTAGE	(34) 2X → X SEL	(34,39) 2X → X SEL	(196) MON CLOCK	(34,40,136) FORCE EAB	(34) X RGTR → X SEL	(35) Q RGTR → Z SEL	(35) ACC → Z SEL	(35) SN 3 → Z SEL	(35) Q RGTR → W SEL	(93,94) Q SEL BIT 08	(95,96) Q SEL BIT 15	(95,96) Q SEL BIT 14
4	(44) W RGTR → SUB SEL	(44) Z RGTR → SUB SEL	(52,211) C RGTR → Q SEL	(80) ADDR 1 BIT 15	(80) ADDR 1 BIT 14	(35) D RGTR → W SEL	(35) SN 3 → W SEL	(35) M RGTR → D SEL	(35) Q RGTR → D SEL	(35) D RGTR → D SEL	(35) SN 3 (LI) → Z RGTR	(35) SN 3 (LI) → W SEL	(36) X SEL → M RGTR	(36) W SEL → M RGTR	(95,96) Q SEL BIT 13	(95,96) Q SEL BIT 12	(97,98) Q SEL BIT 16
5	(80) ADDR 1 BIT 13	(81) ADDR 1 BIT 12	(81) ADDR 1 BIT 11	(81) ADDR 1 BIT 10	(82) ADDR 1 BIT 09	(36) Z SEL → M RGTR	(37) 08414	(37) 08418	(37) 08419	(37) CLR D RGTR	(37) 08434	(38) Z SEL → Z RGTR	(38) W SEL → W RGTR	(38) W SEL → W RGTR	(99,100) Q SEL BIT 23	(99,100) Q SEL BIT 22	(99,100) Q SEL BIT 21
6	(82) ADDR 1 BIT 08	(82) ADDR 1 BIT 07	(83) ADDR 1 BIT 06	(83) ADDR 1 BIT 05	(83) ADDR 1 BIT 04	(38) Z SEL → Z RGTR	(38) CLR W RGTR	(38) D RGTR → W RGTR	(38) CLR Z RGTR	(39) INIT ARITH TMG 0	(41) 08815	(41) MULT POS	(42) ENBL CA	(42) X = 0	(99,100) Q SEL BIT 20	(101,102) Q SEL BIT 27	(101,102) Q SEL BIT 26
7	(84) ADDR 1 BIT 03	(84) ADDR 1 BIT 02	(84) ADDR 1 BIT 01	(84) ADDR 1 BIT 00	(89) X SEL BIT 01	(42) 08917	(42) ICW (SEQ CA)	(43,53) ARITH RPT TERM	(43) SUB = ZERO	(44) EX OR → Q RGTR	(44) U RGTR → V RGTR	(47) 09620 INIT AT 1	(47) 09624 INIT AT 0	(101,102) Q SEL BIT 25	(101,102) Q SEL BIT 24	(103,104) Q SEL BIT 31	(103,104) Q SEL BIT 30
8	(89) X SEL BIT 00	(157) SN 3 25	(156) SN 3 19	(160) SN 3 63	(160) SN 3 62	(161) SN 3 61	(48) SHIFT RIGHT ENBL	(48) SCR SEL → SCR	(48) SHIFT ZERO ENBL	(51) V_A → G CM SEL	(51) V_{AK} → K^* RGTR UPR	(51) KE2	(51) KE1	(103,104) Q SEL BIT 29	(103,104) Q SEL BIT 28	(139) SCR BIT 04	(138) SCR BIT 03
9	(161) SN 3 60	(161) SN 3 57	(184) V RGTR BIT 16	(183) V RGTR BIT 13 (FORMAT III)	(183) V RGTR BIT 12 (FORMAT IV)	(183) V RGTR BIT 09	(53) D SEL → SCR	(53) B_7 = 0	(53) ARITH FP ERROR	(89) X SEL BIT 03	(89) X SEL BIT 02	(89,90) Q SEL BIT 03	(89,90) Q SEL BIT 02	(138) SCR BIT 02	(137) SCR BIT 01	(156) SN 3 31	(156) SN 3 30
10	(183) V RGTR BIT 08	(186) V RGTR BIT 30	(186) V RGTR BIT 29	(185) V RGTR BIT 25	(185) V RGTR BIT 24	(185) V RGTR BIT 23	(89,90) Q SEL BIT 01	(89,90) Q SEL BIT 00	(91) X SEL BIT 07	(91) X SEL BIT 06	(91) X SEL BIT 05	(91) X SEL BIT 04	(91,92) Q SEL BIT 05	(157) SN 3 29	(157) SN 3 28	(156) SN 3 27	(156) SN 3 26
11	(185) V RGTR BIT 22	(185) V RGTR BIT 21	(51,188) EARLY HOLD	(196) MON CLOCK SEQ 1	(196) TIME-OUT	(197) SEQ HOLD	(91,92) Q SEL BIT 04	(93) X SEL BIT 11	(93) X SEL BIT 10	(93) X SEL BIT 09	(93) X SEL BIT 08	(95) X SEL BIT 15	(95) X SEL BIT 14	(157) SN 3 24	(156) SN 3 23	(156) SN 3 22	(157) SN 3 21
12	(197) INTRPT SCAN	(201) SEL SP	(201) SEL SB	(201) P RGTR → ADDR 1	(201) U RGTR → S CM SEL	(201) U RGTR BITS 00-12 → ADDR 1	(95) X SEL BIT 13	(95) X SEL BIT 12	(97) X SEL BIT 19	(97) X SEL BIT 18	(97) X SEL BIT 17	(97) X SEL BIT 16	(97,98) Q SEL BIT 19	(157) SN 3 20	(156) SN 3 18	(157) SN 3 17	(157) SN 3 16
13	(201) R RGTR → ADDR 1	(201) S CM SEL → ADDR 2	(202) C=001	(202) C=000	(202) EXT SIDE	(207) CLR U RGTR BITS 00-31	(97,98) Q SEL BIT 18	(97,98) Q SEL BIT 17	(99) X SEL BIT 23	(99) X SEL BIT 22	(99) X SEL BIT 21	(99) X SEL BIT 20	(101) X SEL BIT 27	(158) SN 3 15	(158) SN 3 14	(159) SN 3 13	(159) SN 3 12
14	(207) C RGTR → U RGTR BITS 00-19	(207) C RGTR → U RGTR BITS 20-31	(207) U RGTR LWR → U RGTR UPR	(208) SET REPEAT FF	(209) H RGTR → C RGTR	(209) U RGTR → C RGTR	(101) X SEL BIT 26	(101) X SEL BIT 25	(101) X SEL BIT 24	(103) X SEL BIT 31	(103) X SEL BIT 30	(103) X SEL BIT 29	(103) X SEL BIT 28	(158) SN 3 11	(158) SN 3 10	(159) SN 3 09	(159) SN 3 08
15	(209) STATUS RGTR → C RGTR	(210,212) CM → C RGTR	(210,213) C RGTR → CM BITS 00-15	(210,213) C RGTR → CM FULL	(210) SET P RGTR	(210) C RGTR → P RGTR	(132) SUB BIT 15	(132) SUB BIT 14	(132) SUB BIT 13	(132) SUB BIT 12	(131) SUB BIT 11	(131) SUB BIT 10	(131) SUB BIT 09	(158) SN 3 07	(158) SN 3 06	(159) SN 3 05	(159) SN 3 04
16	(210) ADDR 2 → M RGTR	(210,212) ADDR 1 → H RGTR, ADDR 2 → Y RGTR	(211) SET BP	(211) C RGTR → BP RGTR	(211) BP RGTR → C RGTR	(211) SET STATUS RGTR CONTROL	(131) SUB BIT 08	(130) SUB BIT 07	(130) SUB BIT 06	(130) SUB BIT 05	(130) SUB BIT 04	(129) SUB BIT 03	(129) SUB BIT 02	(158) SN 3 03	(158) SN 3 02	(159) SN 3 01	(159) SN 3 00
17	(211) P RGTR → C RGTR	(211) H_S RGTR → P_S RGTR	(211) BOOT START	212 JUMP ENBL 4	(213) SET STATUS RGTR ARITH	(213) V_B → B CM SEL	(129) SUB BIT 01	(129) SUB BIT 00	(129) EAB	(136) SUB BIT 31	(136) SUB BIT 30	(136) SUB BIT 29	(136) SUB BIT 28	(160) SN 3 59	(160) SN 3 58	(161) SN 3 56	(160) SN 3 55
18	(213) V_A → B CM SEL	(213) CM ENBL	(213) V_A → S CM SEL	(213) ARITH=−1	(214) CLR STATE RGTR	(214) REI	(135) SUB BIT 27	(135) SUB BIT 26	(135) SUB BIT 25	(135) SUB BIT 24	(134) SUB BIT 23	(134) SUB BIT 22	(134) SUB BIT 21	(160) SN 3 54	(161) SN 3 53	(161) SN 3 52	(160) SN 3 51
19	(214) CP INTRPT	(214) STATUS RGTR → STATE RGTR	(214) STATE RGTR → STATUS RGTR	(214) PRIVILEGED ERROR • MAIN TMG Ø3	(217) ILLEGAL INSTR • MAIN TMG Ø3	(218) I BP	(134) SUB BIT 20	(133) SUB BIT 19	(133) SUB BIT 18	(133) SUB BIT 17	(133) SUB BIT 16	(133) SB 56	(32,139) SCR BIT 05	(160) SN 3 50	161 SN 3 49	(161) SN 3 48	(162) SN 3 47
20	(218) OP BP	(218) OP LIMIT MLO ERROR	(218) OP WRITE MLO ERROR	(218) OP READ MLO ERROR	(218) I LIMIT MLO ERROR	(218) I EXEC MLO ERROR	(32,137) SCR BIT 00	(180) KU1	(184) V RGTR BIT 19	(184) V RGTR BIT 18	(184) V RGTR BIT 17	(184) V RGTR BIT 15	(184) V RGTR BIT 14	(162) SN 3 46	(163) SN 3 45	(163) SN 3 44	(162) SN 3 43
21	(219) INTRPT SS 3	(219) ASYNCHRONOUS ERROR	(219) INTRPT SEQ REQ	(219) INTRPT SS 1	(219) INTRPT SS 4	(219) INTRPT SS 2	(183) V RGTR BIT 11 (IA)	(183) V RGTR BIT 10 (CA)	(186) V RGTR BIT 31	(186) V RGTR BIT 28	(186) V RGTR BIT 27	(186) V RGTR BIT 26	(185) V RGTR BIT 20	(162) SN 3 42	(163) SN 3 41	(163) SN 3 40	(162) SN 3 39
22	(219) INTRPT SS 5	(220) IOC MEM REQ	(220) OP READ ENBL	(220) OP WRITE ENBL	(220) IOC READ ENBL	(226) 24804	(53,188) LATE HOLD	(208) SKIP SEQ REQ	(208) CLR SEQ	(209) CLR C RGTR	(209) ADDR 1 → C RGTR	(51,210) C RGTR → R RGTR	(211-213) Q SEL → CRGTR	(162) SN 3 38	(163) SN 3 37	(163) SN 3 36	(162) SN 3 35
23	(228) I REQ TIME	(228) P RGTR → I BUS	(228) I CLOCK HOLD	(230) OP REQ TIME	(230) OP READ FF	(230) OP CLOCK HOLD	(226) ORR BIT 05	(226) ORR BIT 04	226 ORR BIT 03	(226) ORR BIT 02	(226) ORR BIT 01	(226) ORR BIT 00	(230) OP WRITE FF	(162) SN 3 34	(163) SN 3 33	(163) SN 3 32	(230) M RGTR → O BUS

TEST POINT BLOCK (CENTRAL PROCESSOR)

CHANGE 2

SIZE	CODE IDENT	DWG NO.
D	90536	7073539
SCALE	CLASS A	SHEET 5

DWG. NO. 7073539

UD 1-8534C

REVISIONS						
ZONE	LTR	EIR	DESCRIPTION	CHK	DATE	APPROVED
	Y	D03399	SEE EIR	KAB	6-30-71	Stalmann

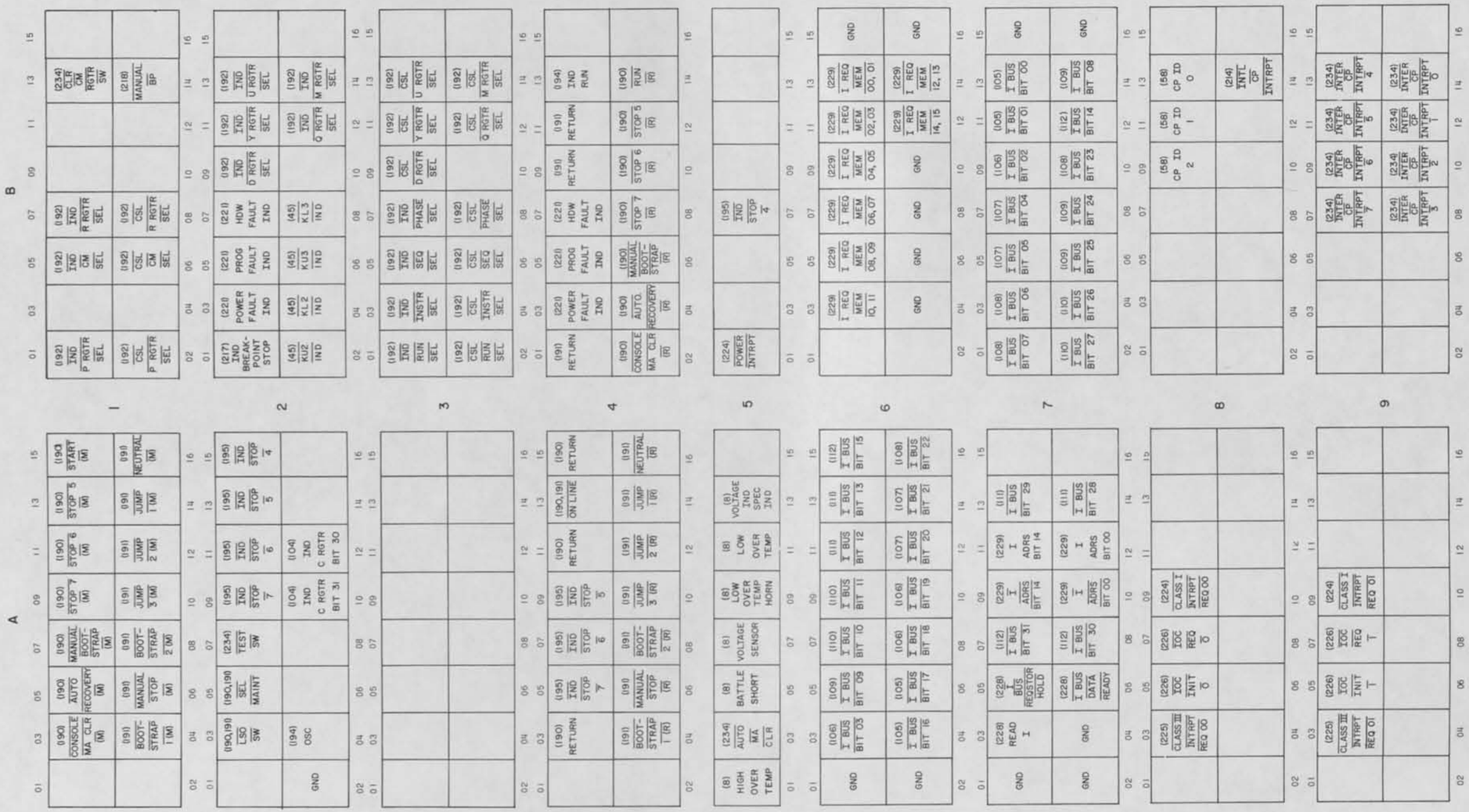

DWG. NO. 7073539

CENTRAL PROCESSOR
BACK CONNECTOR PANEL (P2) 150

SIZE	CODE IDENT	DWG NO.
D	90536	7073539
SCALE	CLASS A	SHEET 6

UD 1-8534C

REVISIONS					
ZONE	LTR	EIR	DESCRIPTION	CHK	DATE	APPROVED

HEAT EXCHANGER END

	A	B
1	(199) IND / I SEQ (45) KU4 IND	(193) CSL CM / BIT 06 (193) CSL CM / BIT 05 (193) CSL CM / BIT 04 (189) IND MAIN / TMG 11 (189) IND MAIN / TMG 21 (189) IND MAIN / TMG 31
2	(45) KU1 IND (199) IND / OP 1 SEQ (199) IND / IA SEQ (200) IND / OP 2 SEQ (219) IND / INTRPT (191) ON LINE IND	(193) CSL CM / BIT 03 (193) CSL CM / BIT 02 (193) CSL CM / BIT 01 (193) CSL CM / BIT 00 (195,234) CLR / C RGTR SW
3	(94) IND / C RGTR BIT 10 (100) IND / C RGTR BIT 23 (28) AKU2 IND (28) AKU3 IND (28) AKU4 IND (194) IND RUN	(45) KU1 IND (45) KU1 IND (45) KU1 IND
4	(92) IND / C RGTR BIT 00 (90) IND / C RGTR BIT 05 (92) IND / C RGTR BIT 11 (102) IND / C RGTR BIT 24 (53, 213) B7 DISC. (199, 210) DSBL ADV / P RGTR	(102) IND / C RGTR BIT 20 (100) IND / C RGTR BIT 26 (94) IND / C RGTR BIT 28 (102) IND / C RGTR BIT 13 (100) IND / C RGTR BIT 21 (94) IND / C RGTR BIT 26 (102) IND / C RGTR BIT 25 (104) IND / C RGTR BIT 29 (102) IND / C RGTR BIT 27
5	(190) CONSOLE MA CLR (0) (190) AUTO. RECOVERY (0) (190) MANUAL BOOT-STRAP (0) (190) POWER FAULT IND (190) PROG FAULT IND (190) RUN (0) (198) BOOT-STRAP 1 (0) (198) MANUAL STOP (0) (198) BOOT-STRAP 2 (0) (190) LOCAL IND (191) ON LINE IND (195) NEUTRAL STOP 4 (198) NEUTRAL (0)	(234) AUTO. START SWITCH (94) IND RUN
6		
7	(230) OP READ (230) OP WRITE (165) OP BUS / BIT 03 (170) OP BUS / BIT 16 (167) OP BUS / BIT 09 (170) OP BUS / BIT 17 (230) OP BUS / REGISTOR HOLD (230) OP BUS / DATA READY (175) OP BUS / BIT 31 (175) OP BUS / BIT 30 (168) OP BUS / BIT 10 (176) OP BUS / BIT 18 (226) OP ADRS / BIT 14 (226) OP ADRS / BIT 00 (168) OP BUS / BIT 11 (176) OP BUS / BIT 19 (226) OP ADRS / BIT 14 (226) OP ADRS / BIT 00 (168) OP BUS / BIT 12 (171) OP BUS / BIT 20 (226) OP ADRS / BIT 14 (226) OP ADRS / BIT 00 (168) OP BUS / BIT 13 (171) OP BUS / BIT 21 (174) OP BUS / BIT 29 (174) OP BUS / BIT 28	(231) OP REQ / MEM 10,11 (176) WRITE BYTE 0 (231) OP REQ / MEM 08,09 (176) WRITE BYTE 1 (231) OP REQ / MEM 06,07 (176) WRITE BYTE 2 (231) OP REQ / MEM 04,05 (176) WRITE BYTE 3 (231) OP REQ / MEM 02,03 (231) OP REQ / MEM 14,15 (231) OP REQ / MEM 00,01 (231) OP REQ / MEM 12,13 GND GND (164) OP BUS / BIT 00 (167) OP BUS / BIT 08 (64) OP BUS / BIT 01 (167) OP BUS / BIT 14 (166) OP BUS / BIT 06 (173) OP BUS / BIT 26 (166) OP BUS / BIT 05 (173) OP BUS / BIT 25 (165) OP BUS / BIT 04 (172) OP BUS / BIT 24 (164) OP BUS / BIT 02 (172) OP BUS / BIT 23
8	(225) CLASS III INTRPT REQ 10 (225) CLASS III INTRPT REQ 11 (226) IOC INIT 2 (226) IOC INIT 3 (226) IOC REQ 2 (226) IOC REQ 3 (224) CLASS I INTRPT REQ 10 (224) CLASS I INTRPT REQ 11	
9		

P3

C CARD ROW

DWG. NO. 7073539

CENTRAL PROCESSOR,
BACK CONNECTOR PANEL (P3)

150

SIZE	CODE IDENT	DWG NO.
D	90536	7073539
SCALE	CLASS A	SHEET 7

UD 1-8534C

REVISIONS						
ZONE	LTR	EIR	DESCRIPTION	CHK	DATE	APPROVED
	CL	D11335	SEE EIR	JY	1-24-74	[illegible]

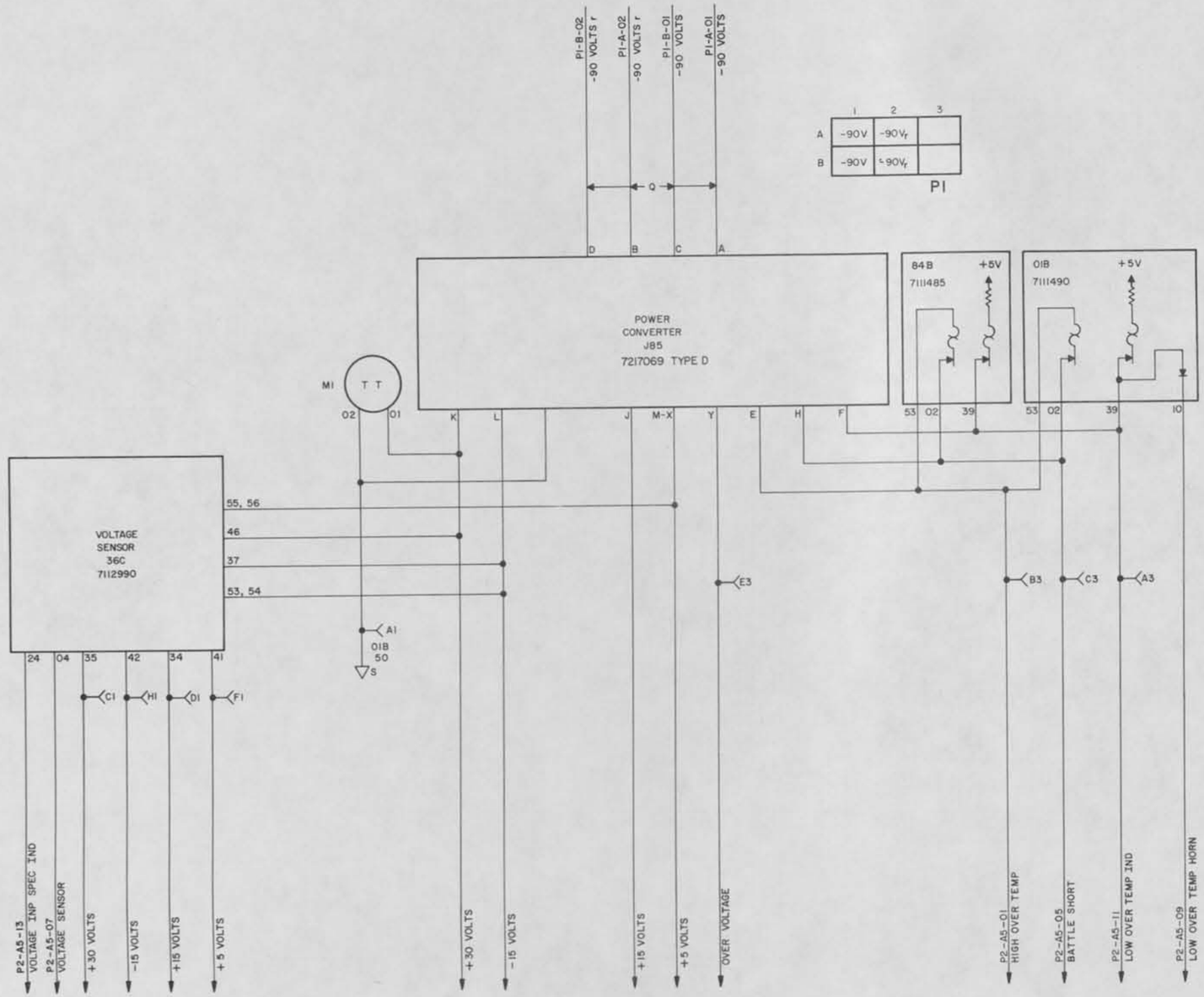

DWG. NO. 7073539

POWER AND TEMPERATURE CONTROLS 149

CHANGE 2

SIZE	CODE IDENT	DWG NO.
D	90536	7073539
SCALE	CLASS A	SHEET 8

UD 1-8534C

REVISIONS						
ZONE	LTR	EIR	DESCRIPTION	CHK	DATE	APPROVED
	Y	D03399	SEE EIR		6-30-71	
	AH	D04915	SEE EIR		1-28-72	
	BT	D06552	SEE EIR		2-17-72	
	CK	D09611	SEE EIR		8-22-72	

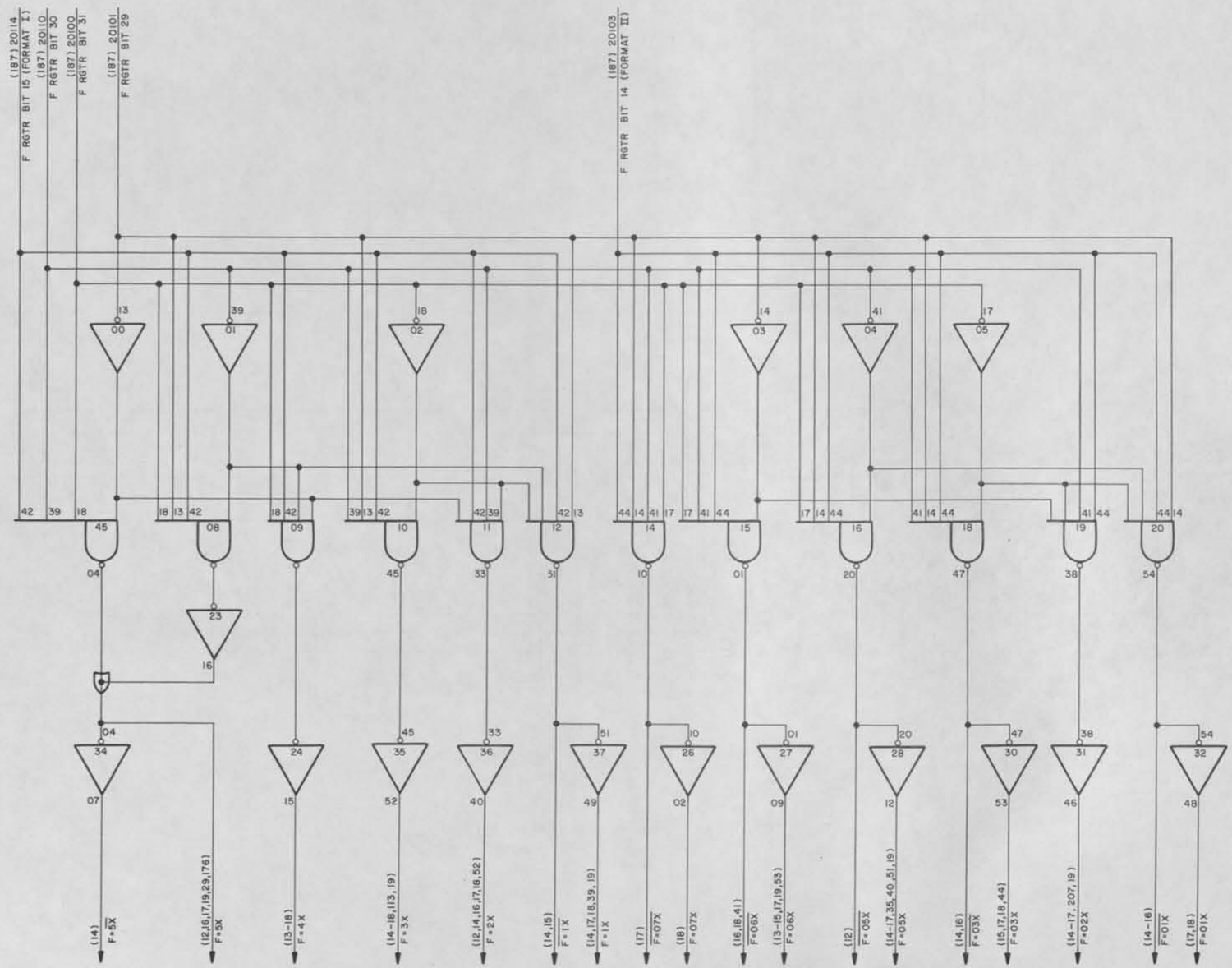

NOTES:
1. CARD TYPE – 1610
2. CARD LOCATION – 09B

CHANGE 2

F OCTAL TRANSLATOR I 060

SIZE	CODE IDENT	DWG NO.
D	90536	7073539
SCALE	CLASS A	SHEET 9

DWG. NO. 7073539

UD 1-8534C

REVISIONS						
ZONE	LTR	EIR	DESCRIPTION	CHK	DATE	APPROVED
	AT	D05729	SEE EIR	RW	2-3-72	H. Lawrence
	BT	D06552	SEE EIR	RW	2-17-72	H. Lawrence

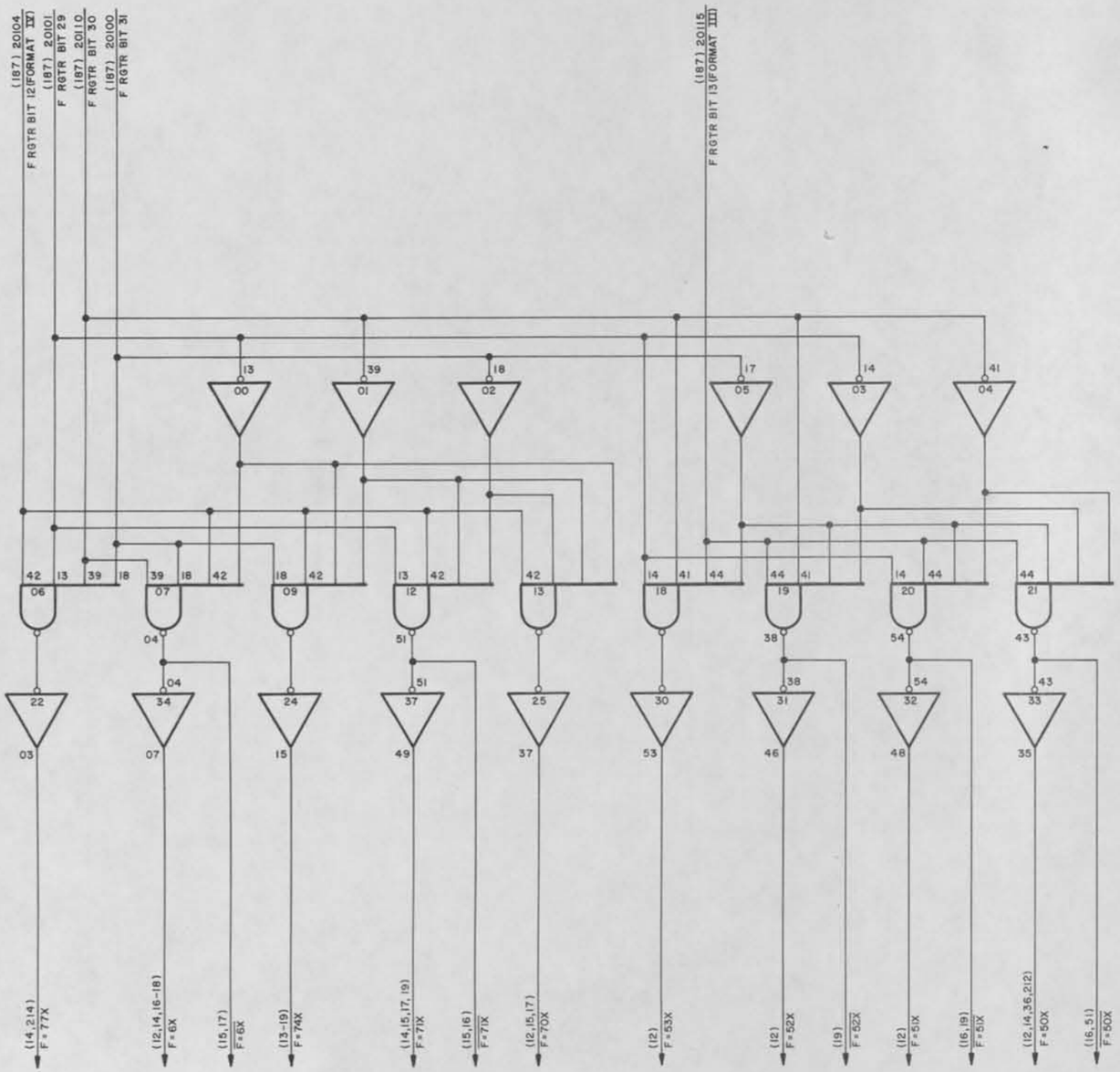

NOTE:
1. CARD TYPE — 1610
2. CARD LOCATION — 088

F OCTAL TRANSLATOR 2 | 061

SIZE	CODE IDENT	DWG NO.
D	90536	7073539
SCALE	CLASS A	SHEET 0

DWG. NO. 7073539

UD 1-8534C

REVISIONS						
ZONE	LTR	EIR	DESCRIPTION	CHK	DATE	APPROVED
	AH	D04915	SEE EIR	RJ	1-28-72	H. Dunwoody
	AT	D05729	SEE EIR	RJ	2-3-72	H. Dunwoody
	BT	D06552	SEE EIR	RJ	2-17-72	H. Dunwoody

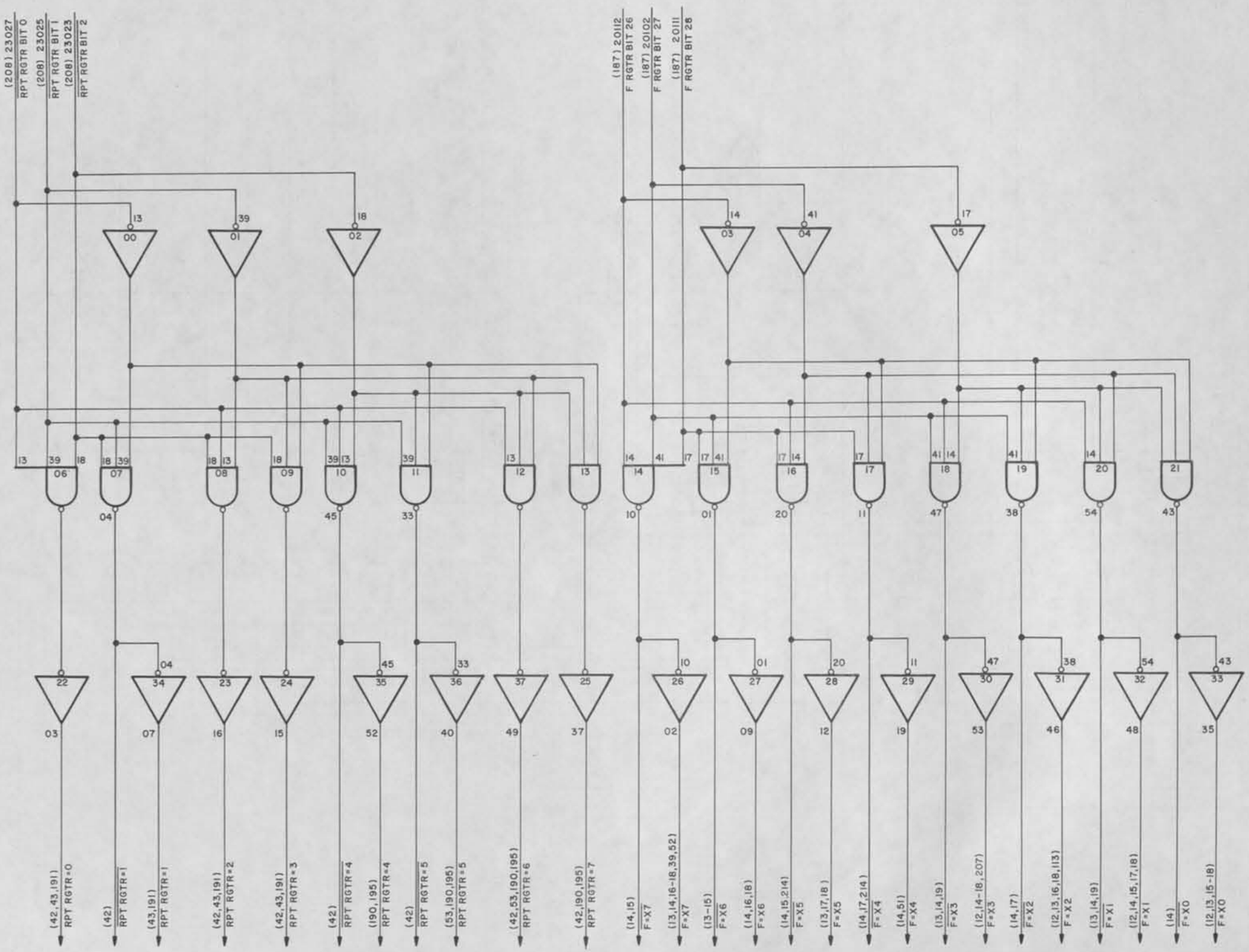

NOTES:
1. CARD TYPE - 1610
2. CARD LOCATION - 07B

F OCTAL TRANSLATOR 3 062

SIZE	CODE IDENT	DWG NO.
D	90536	7073539
SCALE	CLASS A	SHEET 11

DWG. NO. 7073539

UD 1-2534C

REVISIONS						
ZONE	LTR	EIR	DESCRIPTION	CHK	DATE	APPROVED
	BU	D06551	SEE EIR	RJ	2-17-72	H. Sturtevant
	BV	D06076	SEE EIR	RJ	2-18-72	H. Sturtevant

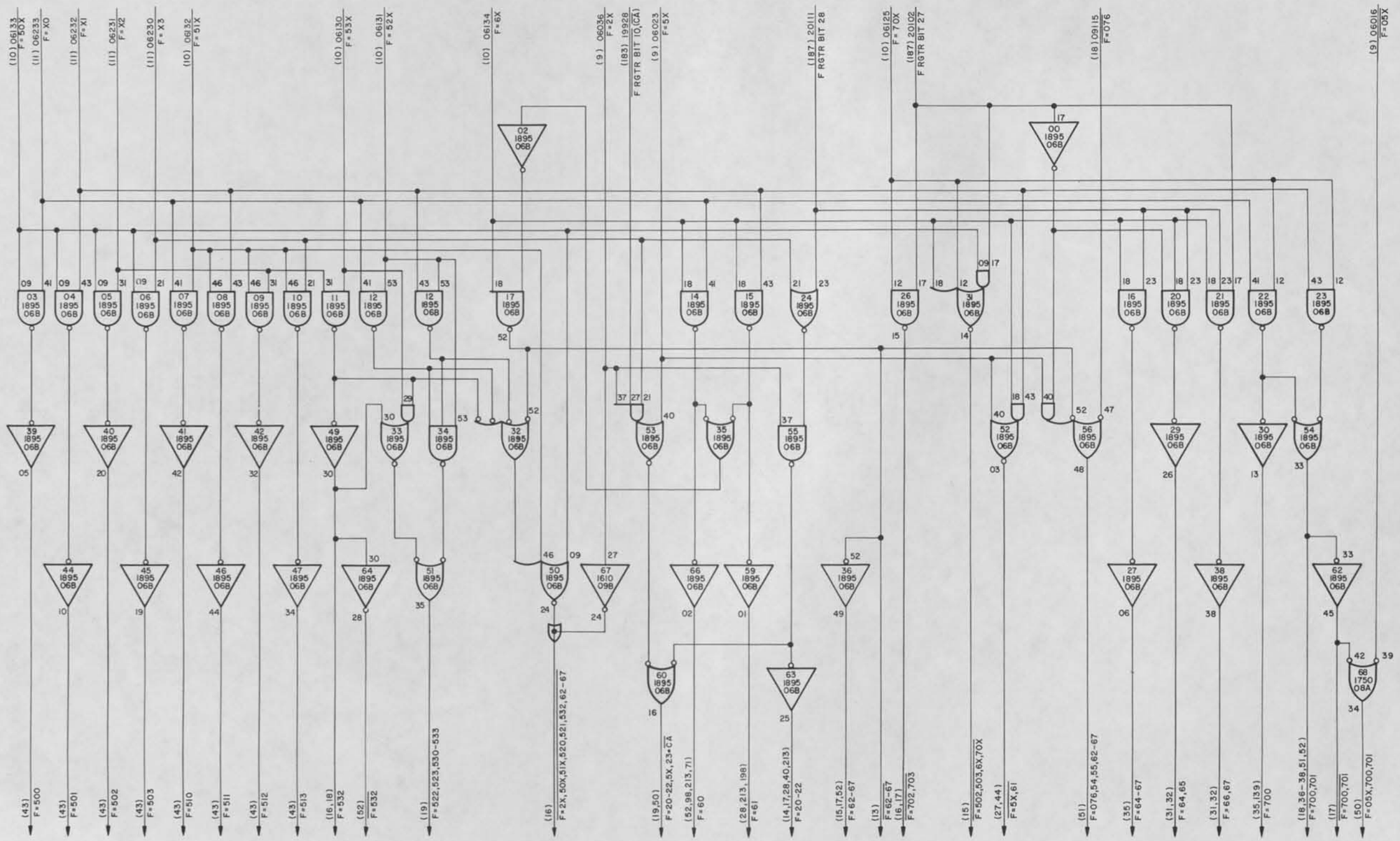

F TRANSLATOR I 063

SIZE	CODE IDENT	DWG NO.
D	90536	7073539
SCALE	CLASS A	SHEET 12

DWG. NO. 7073539

UD 1-8534C

REVISIONS						
ZONE	LTR	EIR	DESCRIPTION	CHK	DATE	APPROVED
	BE	D06054	SEE EIR		4-11-72	
	CA	D06588	SEE EIR		12-18-72	
	CK	D09611	SEE EIR		8-27-73	

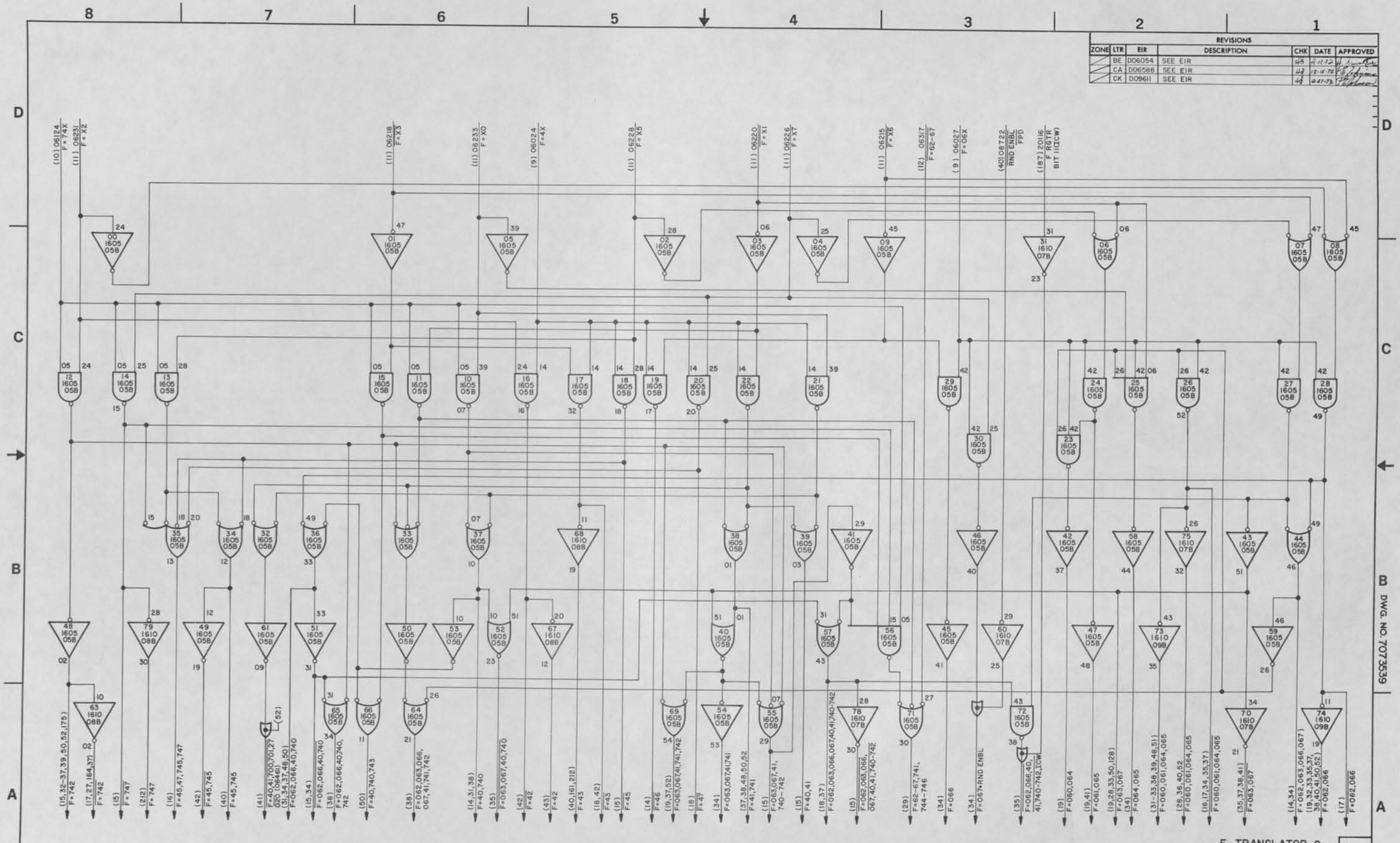

CHANGE 2

F TRANSLATOR 2 064

SIZE	CODE IDENT	DWG NO.
D	90536	7073539
SCALE	CLASS A	SHEET 3

DWG. NO. 7073539

UD 1-8534C

REVISIONS						
ZONE	LTR	EIR	DESCRIPTION	CHK	DATE	APPROVED
	BT	D06552	SEE EIR	RD	2-16-72	[illegible]
	CA	D06588	SEE EIR	RB	12-15-72	[illegible]

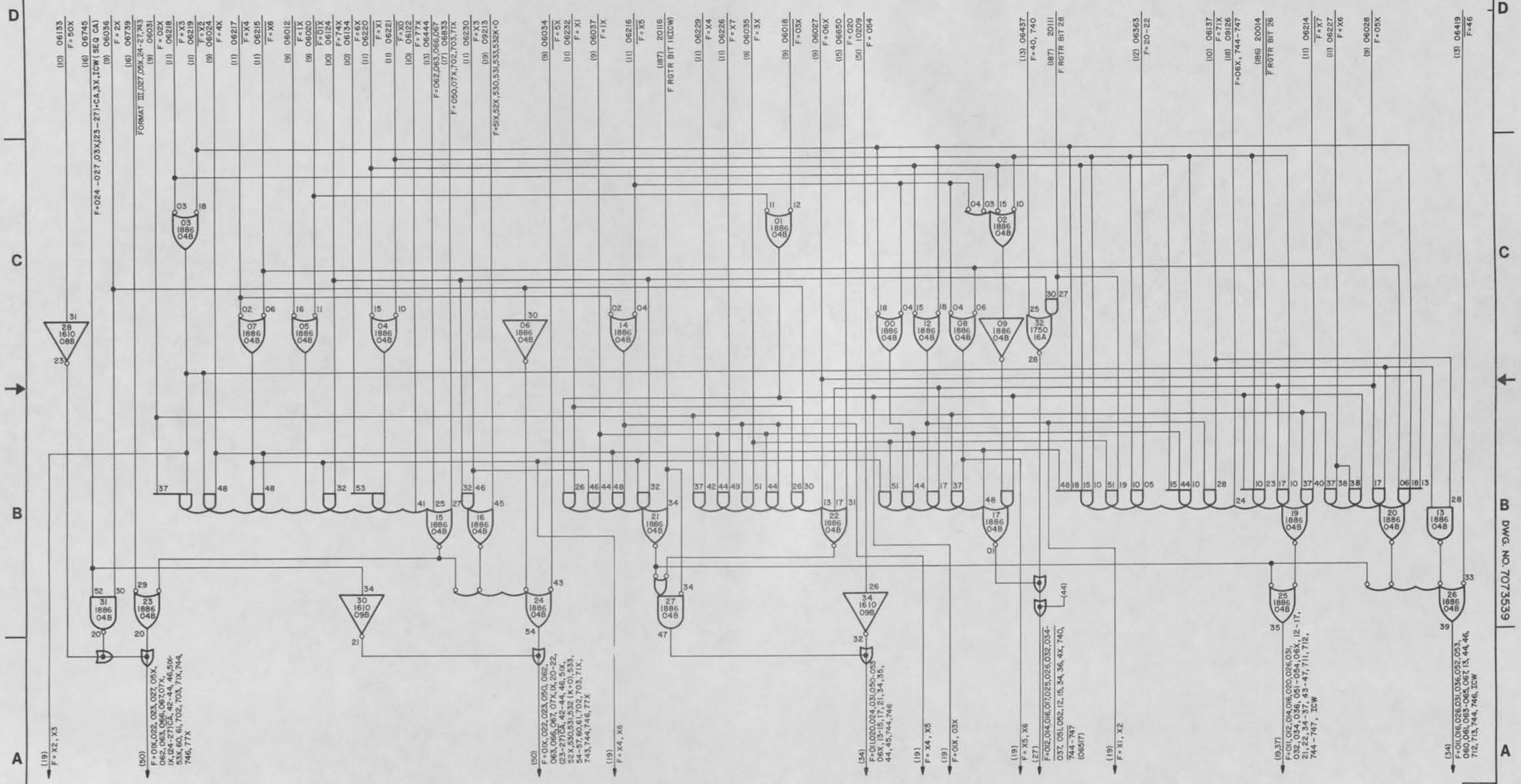

REVISIONS						
ZONE	LTR	EIR	DESCRIPTION	CHK	DATE	APPROVED
	BB	D05858	SEE EIR		8-14-72	
	CA	D06588	SEE EIR		12-18-72	

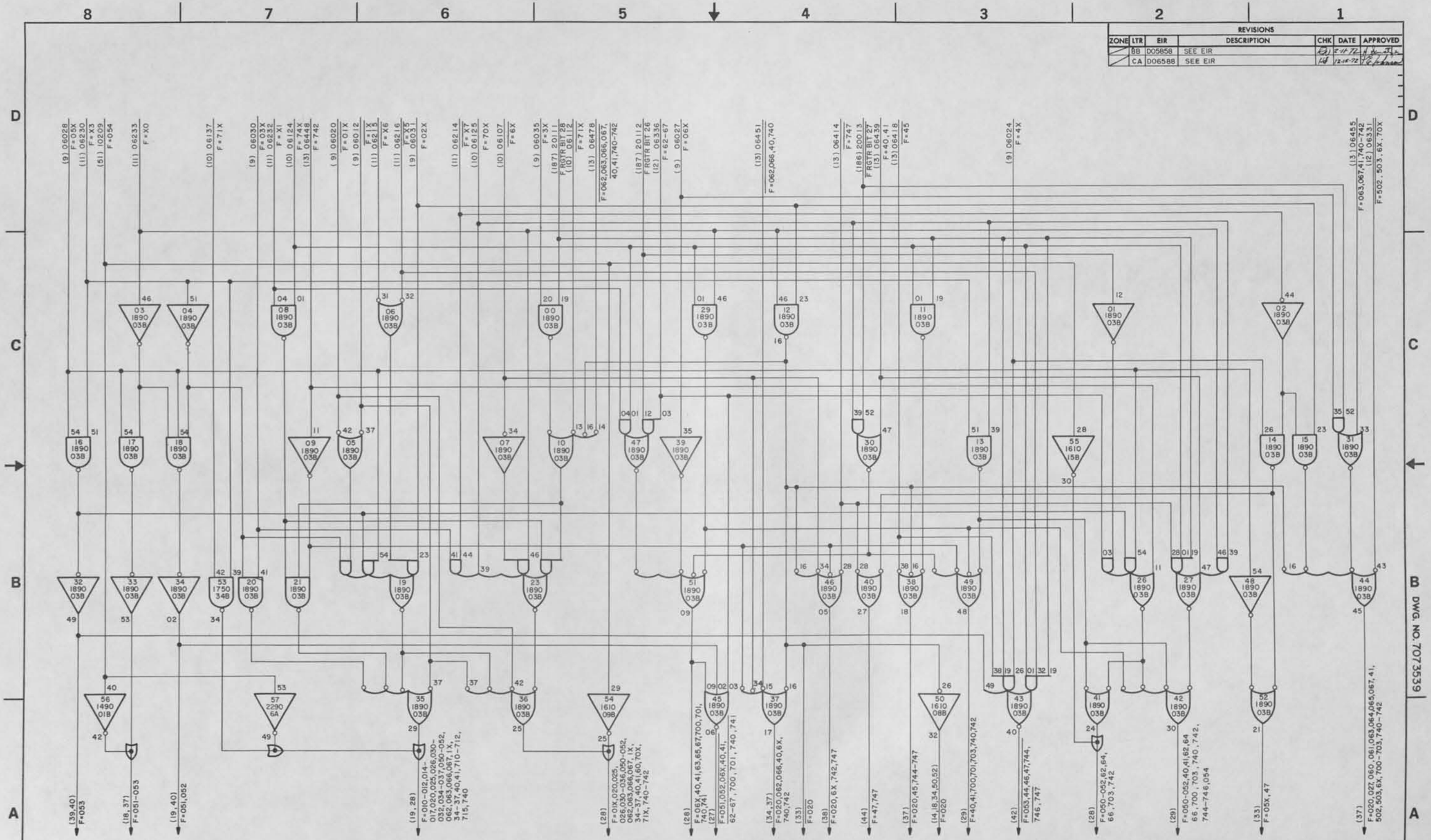

CHANGE 2

F TRANSLATOR 4 066

SIZE	CODE IDENT	DWG NO.
D	90536	7073539
SCALE	CLASS A	SHEET 5

DWG. NO. 7073539

UD 1-8534C

REVISIONS						
ZONE	LTR	EIR	DESCRIPTION	CHK	DATE	APPROVED
	Y	D03399	SEE EIR	LAB	6-30-71	[illegible]
	BN	D06513	SEE EIR	RAJ	2-12-72	[illegible]
	BT	D06552	SEE EIR	RJ	2-17-72	[illegible]
	CA	D06588	SEE EIR	HB	12-15-72	[illegible]
	CC	D06701	SEE EIR	HB	7-18-73	[illegible]

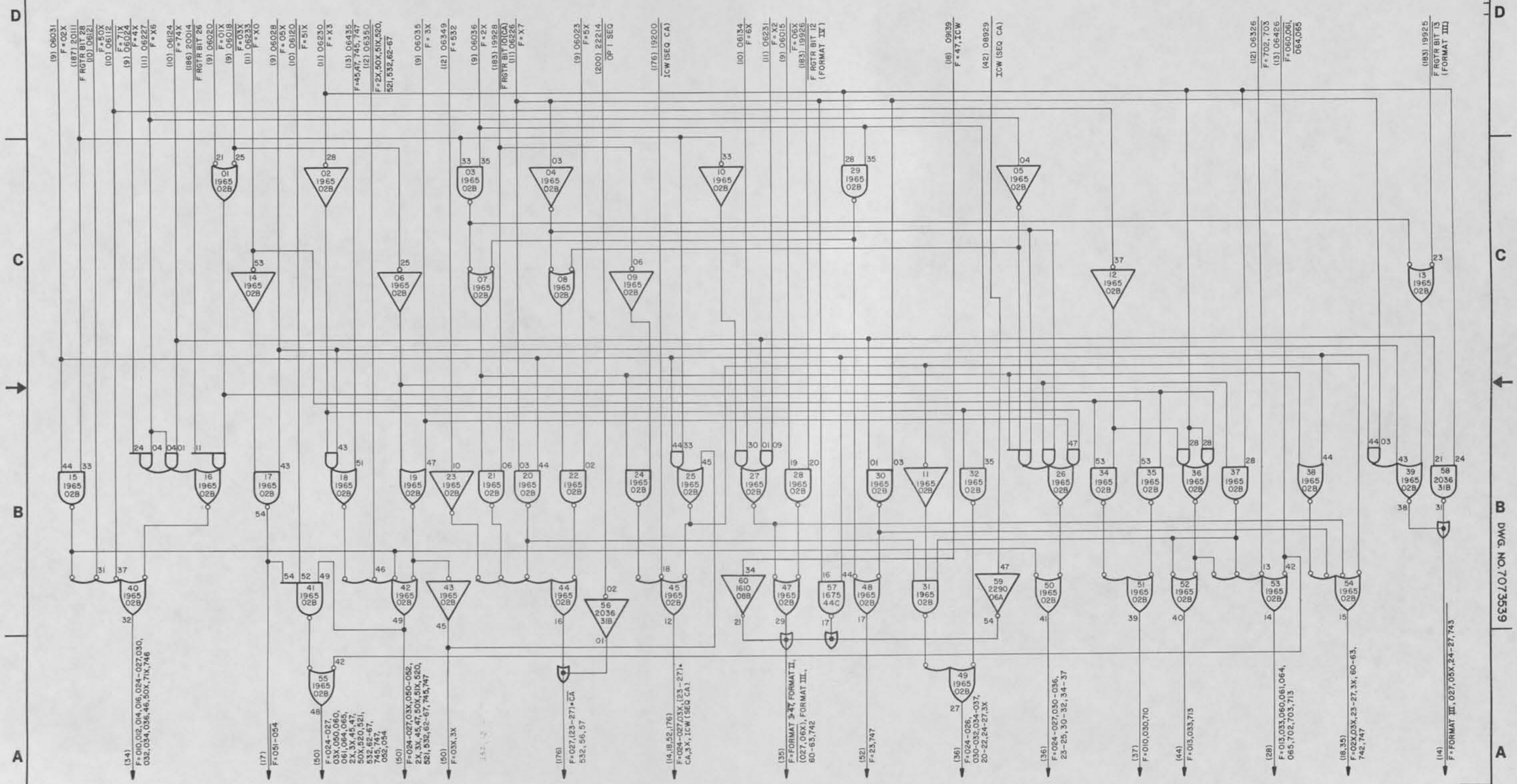

CHANGE 2

F TRANSLATOR 5 067

SIZE	CODE IDENT	DWG NO.
D	90536	7073539
SCALE	CLASS A	SHEET 16

DWG. NO. 7073539

UD 1-8534C

REVISIONS						
ZONE	LTR	EIR	DESCRIPTION	CHK	DATE	APPROVED
	Y	D03399	SEE EIR	KAP	6-30-71	
	BY	D06632	SEE EIR	RB	2-18-72	
	CA	D06588	SEE EIR	HB	12-18-72	

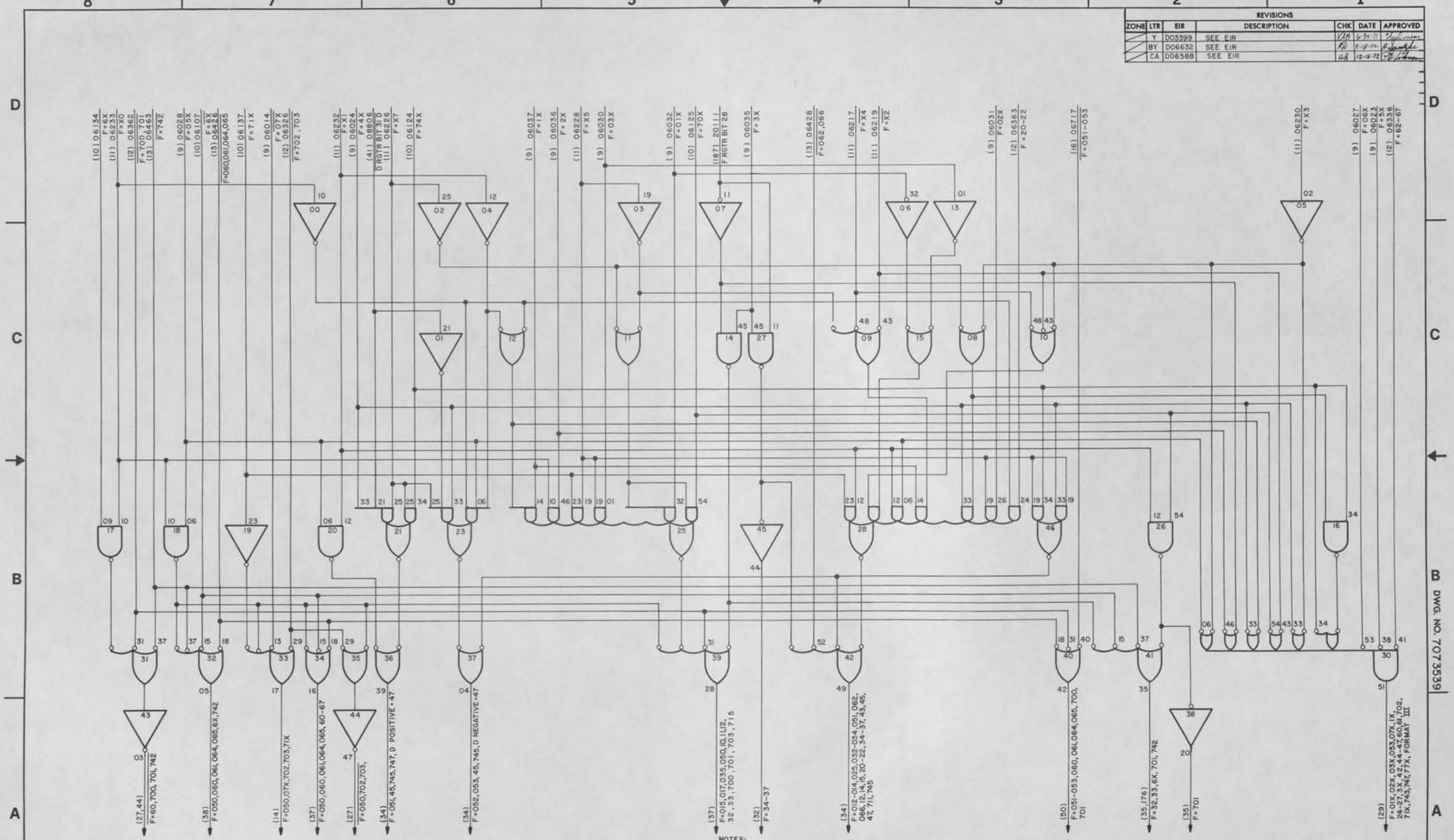

NOTES:
1. CARD TYPE-1970
2. CARD LOCATION-04A

DWG. NO. 7073539

F TRANSLATOR 6 068

SIZE	CODE IDENT	DWG NO.
D	90536	7073539
SCALE	CLASS A	SHEET 7

CHANGE 2

UD 1-8534C

REVISIONS						
ZONE	LTR	EIR	DESCRIPTION	CHK	DATE	APPROVED
	Y	D03399	SEE EIR	KAB	6-30-71	[illegible]
	CC	D06701	SEE EIR	[illegible]	2-18-73	[illegible]

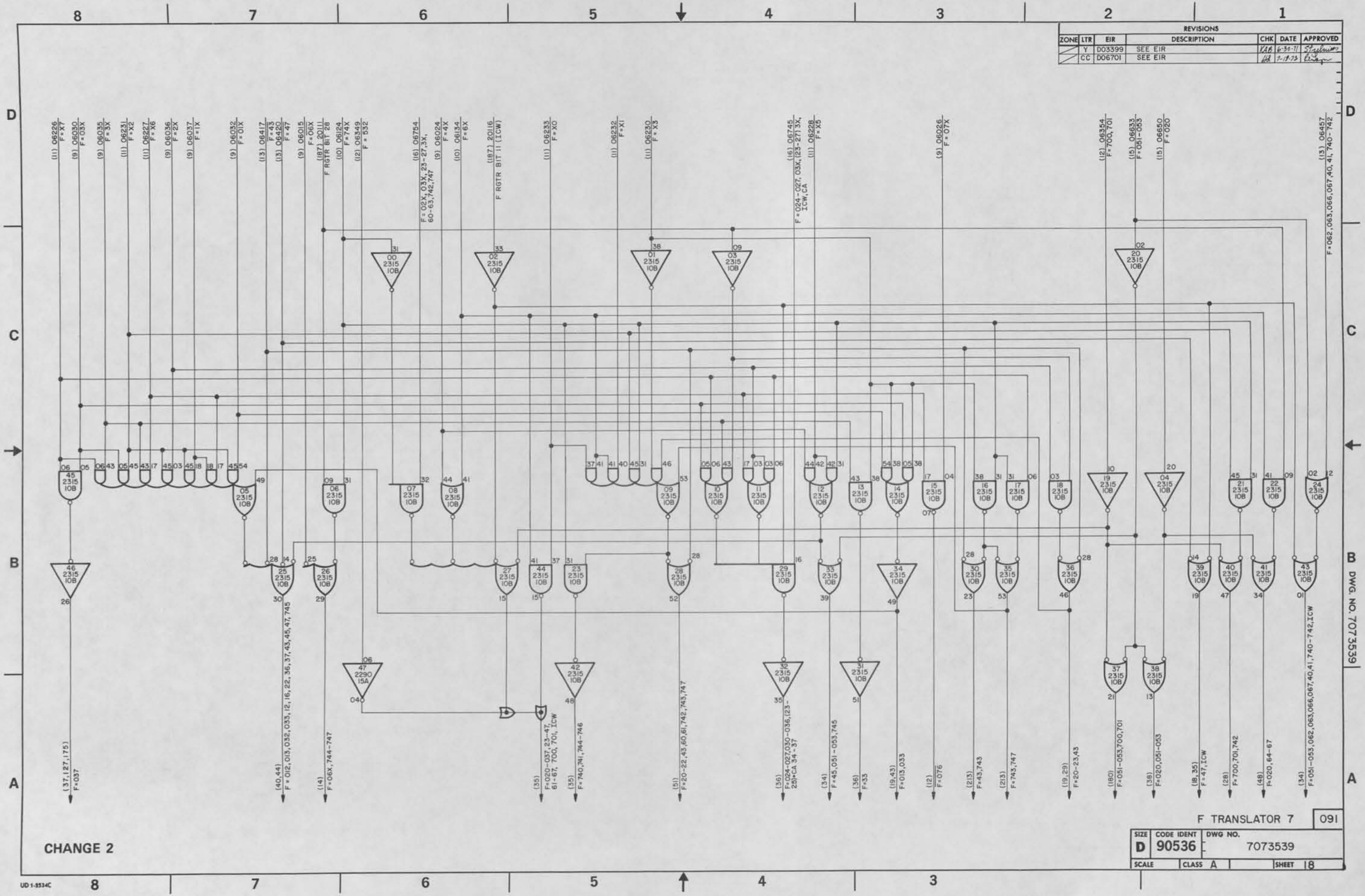

F TRANSLATOR 7 | 091

SIZE	CODE IDENT	DWG NO.
D	90536	7073539
SCALE	CLASS A	SHEET 8

CHANGE 2

UD 1-2534-C

REVISIONS						
ZONE	LTR	EIR	DESCRIPTION	CHK	DATE	APPROVED
	BT	D06552	SEE EIR			
	CA	D06588	SEE EIR			

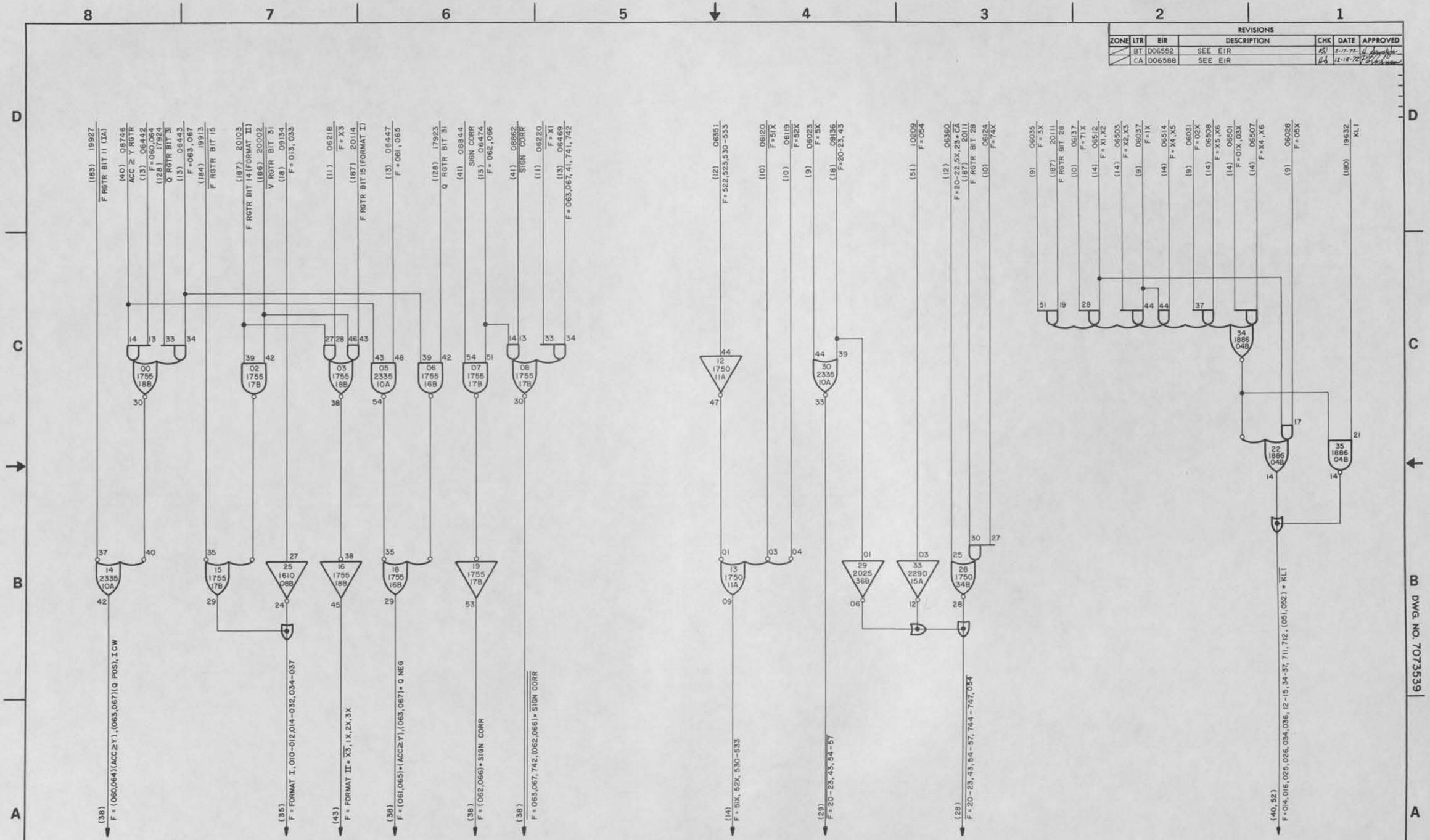

CHANGE 2

F TRANSLATOR 8 | 092

SIZE	CODE IDENT	DWG NO.
D	90536	7073539
SCALE	CLASS A	SHEET 19

UD 1-8534C

REVISIONS						
ZONE	LTR	EIR	DESCRIPTION	CHK	DATE	APPROVED
	BB	D05858	SEE EIR	RD	2-11-72	H. Jo-Ji
	BC	D05859	SEE EIR	KB	2-11-72	[illegible]

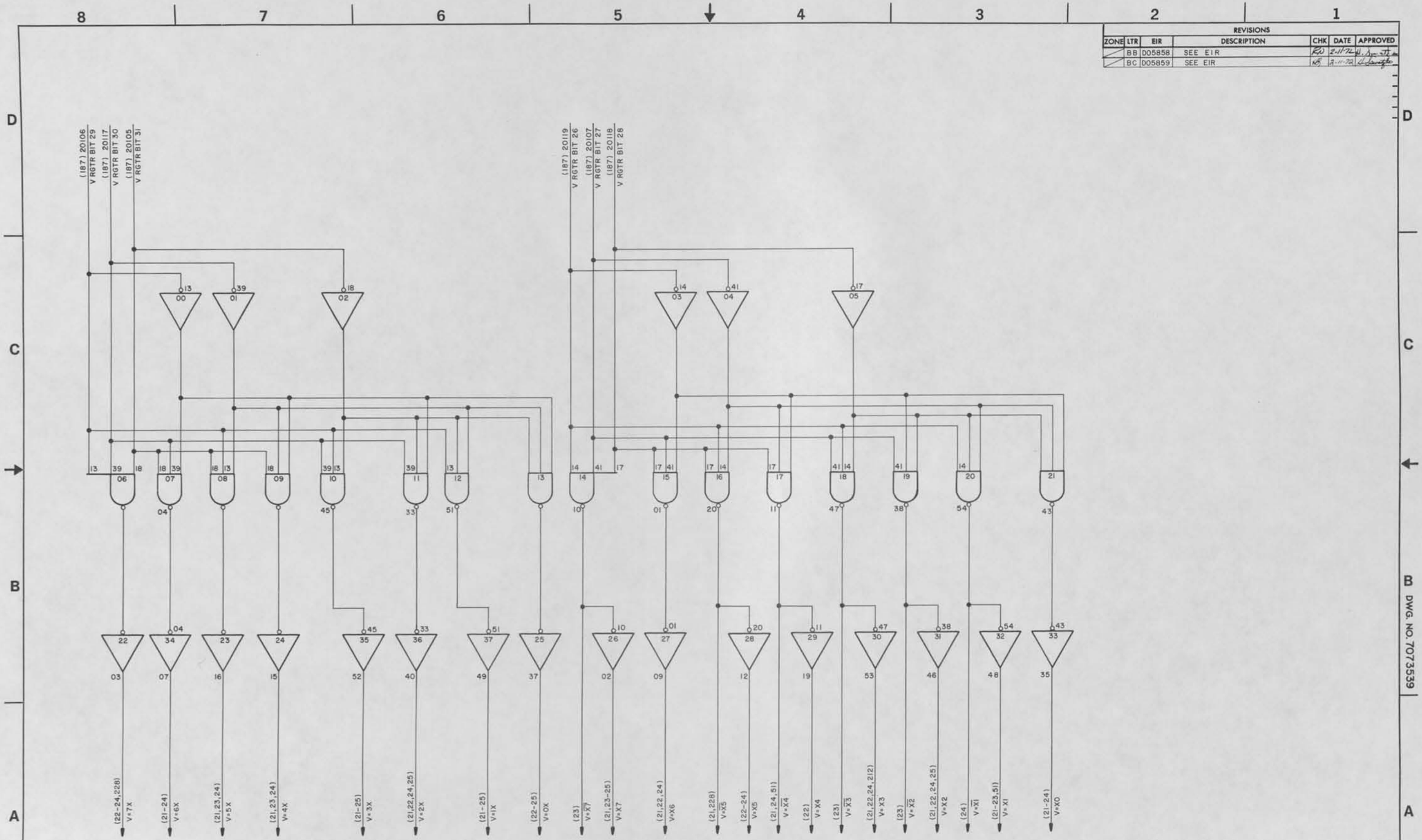

NOTES:
1. CARD TYPE - 1610.
2. CARD LOCATION - 15B.

V OCTAL TRANSLATOR 069

SIZE	CODE IDENT	DWG NO.
D	90536	7073539
SCALE	CLASS A	SHEET 20

DWG. NO. 7073539

UD 1-2534C

REVISIONS						
ZONE	LTR	EIR	DESCRIPTION	CHK	DATE	APPROVED
	AK	D05145	SEE EIR		2-1-72	
	BB	D05858	SEE EIR		2-11-72	
	BT	D06552	SEE EIR		2-17-72	

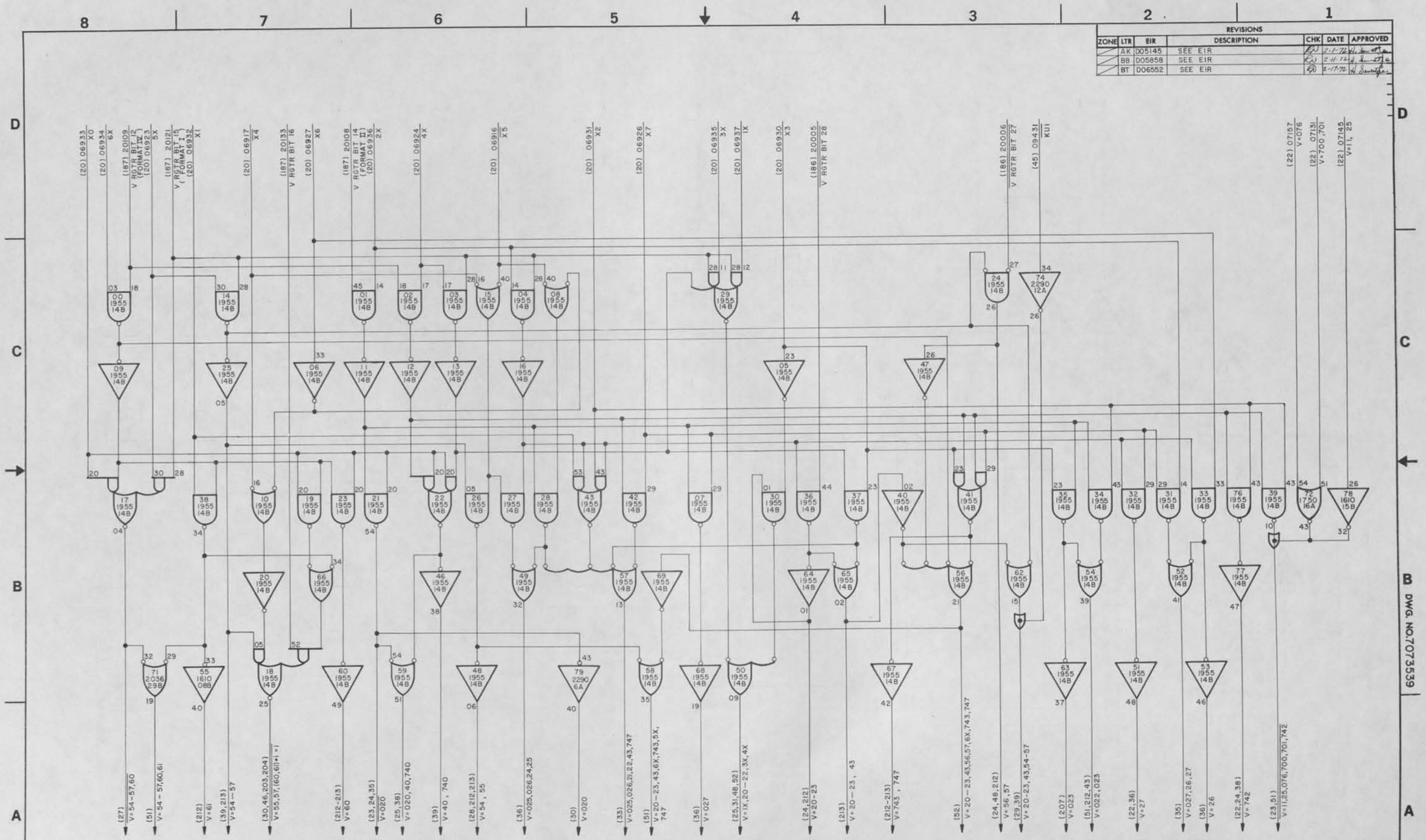

V TRANSLATOR I 070

SIZE	CODE IDENT	DWG NO.
D	90536	7073539
SCALE	CLASS A	SHEET 2

UD 1-8534C

REVISIONS						
ZONE	LTR	EIR	DESCRIPTION	CHK	DATE	APPROVED
	AK	D05145	SEE EIR	RD	2-1-72	
	AN	D05753	SEE EIR	RD	2-2-72	

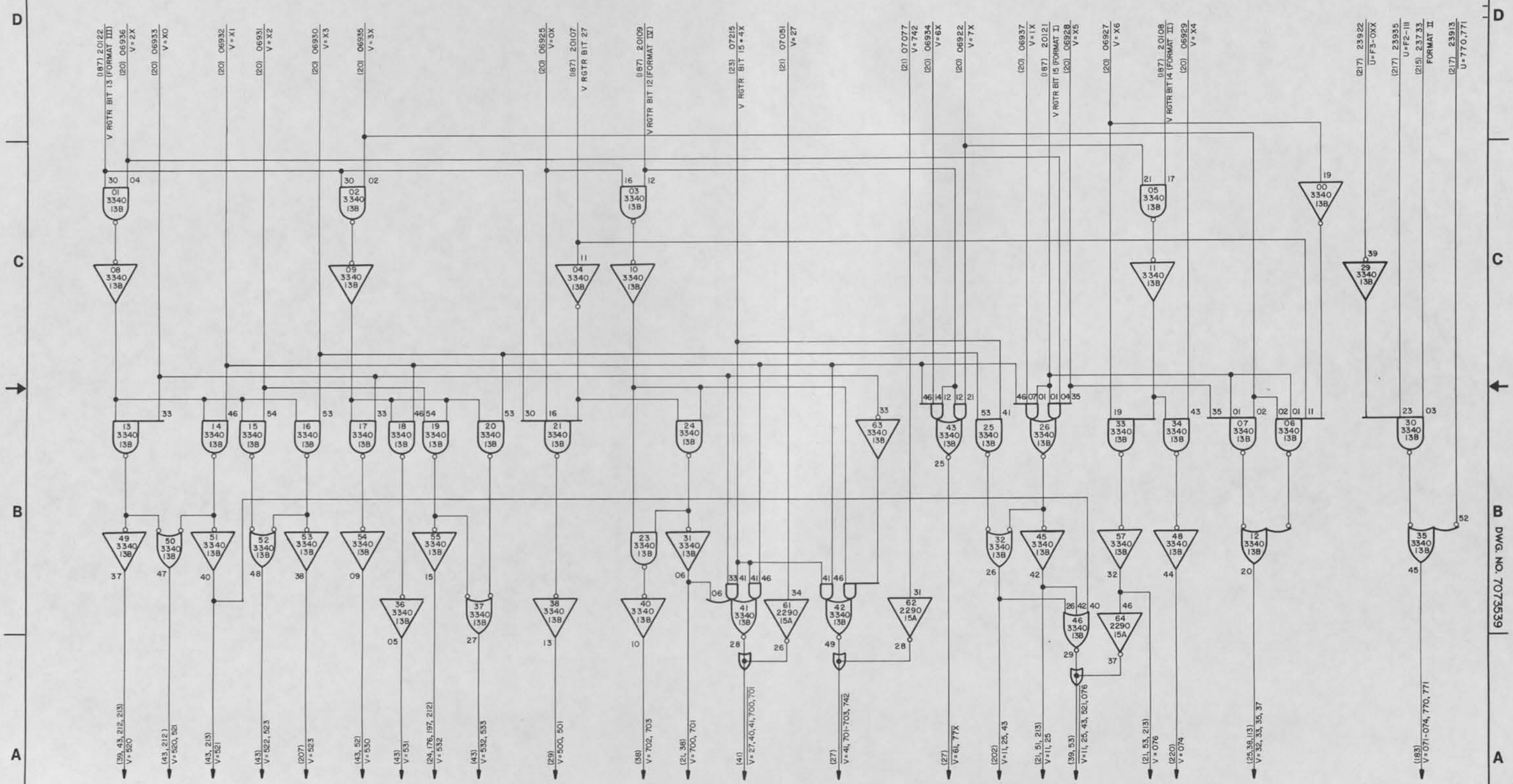

V TRANSLATOR 2 071

SIZE	CODE IDENT	DWG NO.
D	90536	7073539
SCALE	CLASS	SHEET 22

DWG. NO. 7073539

UD 1-8534C

REVISIONS						
ZONE	LTR	EIR	DESCRIPTION	CHK	DATE	APPROVED
	AW	005759	SEE EIR		2-7-72	
	CA	006588	SEE EIR		12-14-72	
	CK	009611	SEE EIR		12-27-73	

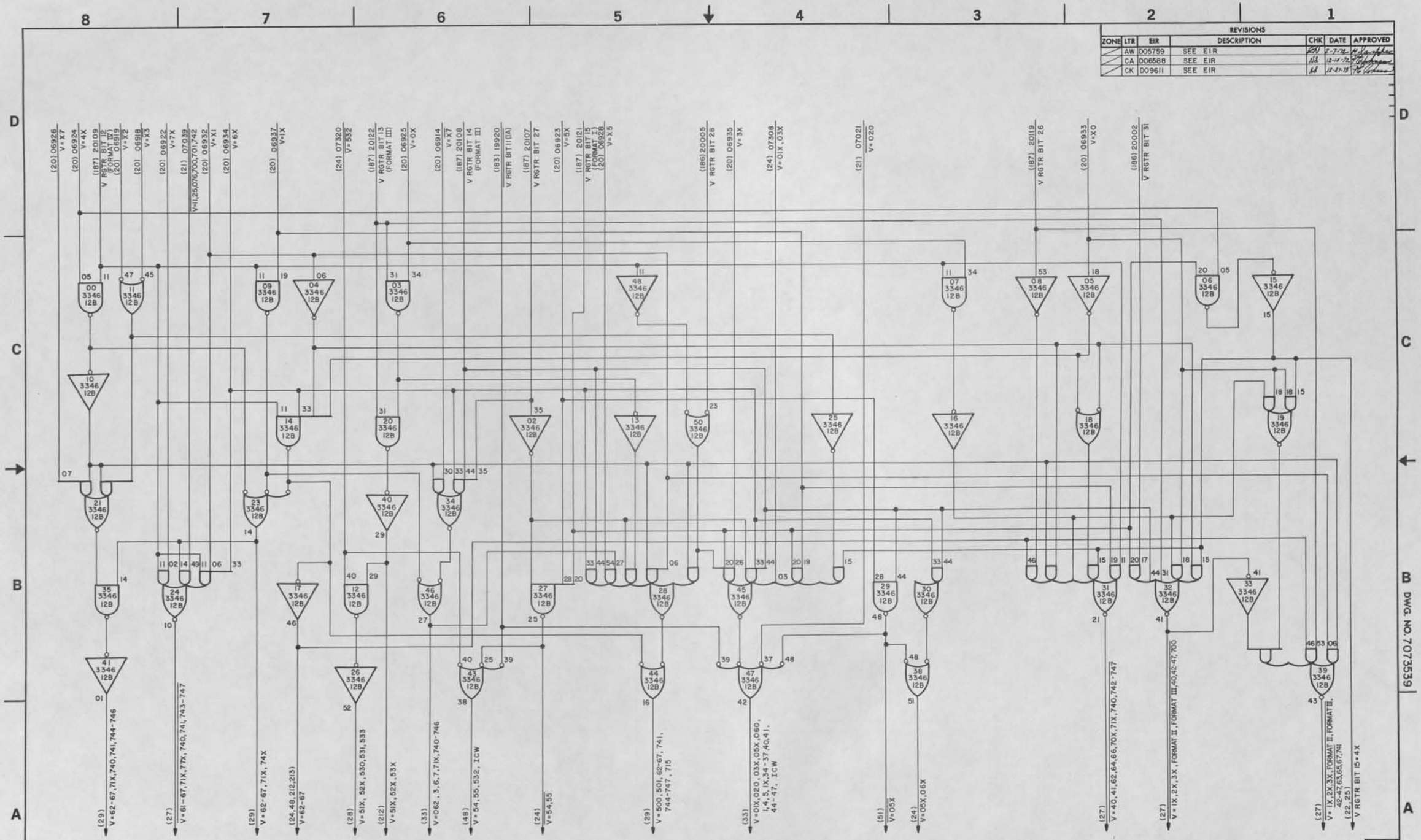

V TRANSLATOR 3 | 072

SIZE	CODE IDENT	DWG NO.
D	90536	7073539
SCALE	CLASS A	SHEET 23

CHANGE 2

UD 1-8534C

REVISIONS						
ZONE	LTR	EIR	DESCRIPTION	CHK	DATE	APPROVED
		AK1005145	SEE EIR			

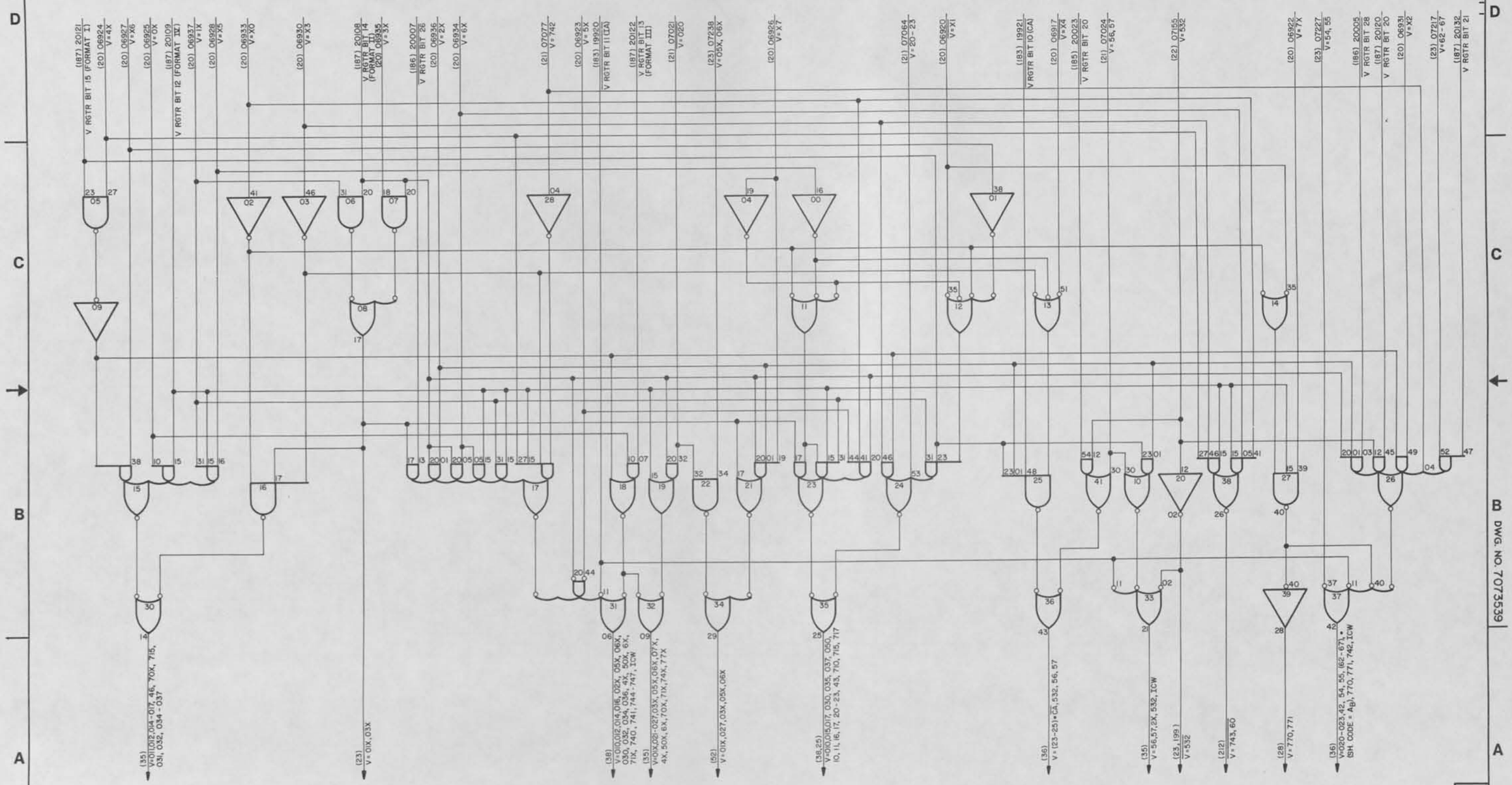

NOTE:
1. CARD TYPE - 3350
2. CARD LOCATION - 11B

V TRANSLATOR 4 | 073

SIZE	CODE IDENT	DWG NO.
D	90536	7073539
SCALE	CLASS A	SHEET 24

DWG. NO. 7073539

UD 1-8534C

REVISIONS						
ZONE	LTR	EIR	DESCRIPTION	CHK	DATE	APPROVED
	BT	D06552	SEE EIR	KU	2-17-72	N. Dunaway

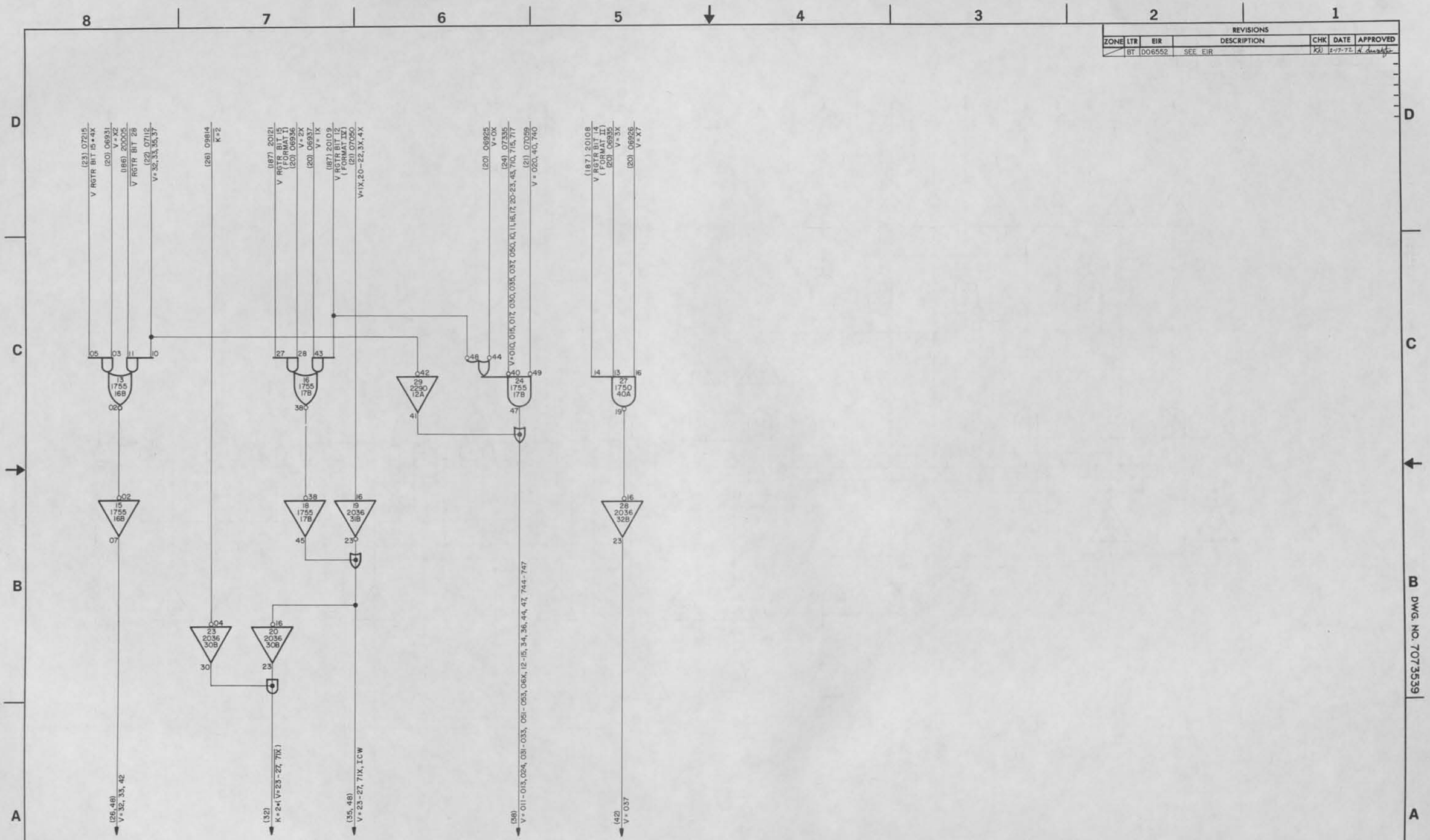

V TRANSLATOR 5 | 097

SIZE	CODE IDENT	DWG NO.
D	90536	7073539
SCALE	CLASS A	SHEET 25

DWG. NO. 7073539

UD 1-8534C

REVISIONS						
ZONE	LTR	EIR	DESCRIPTION	CHK	DATE	APPROVED

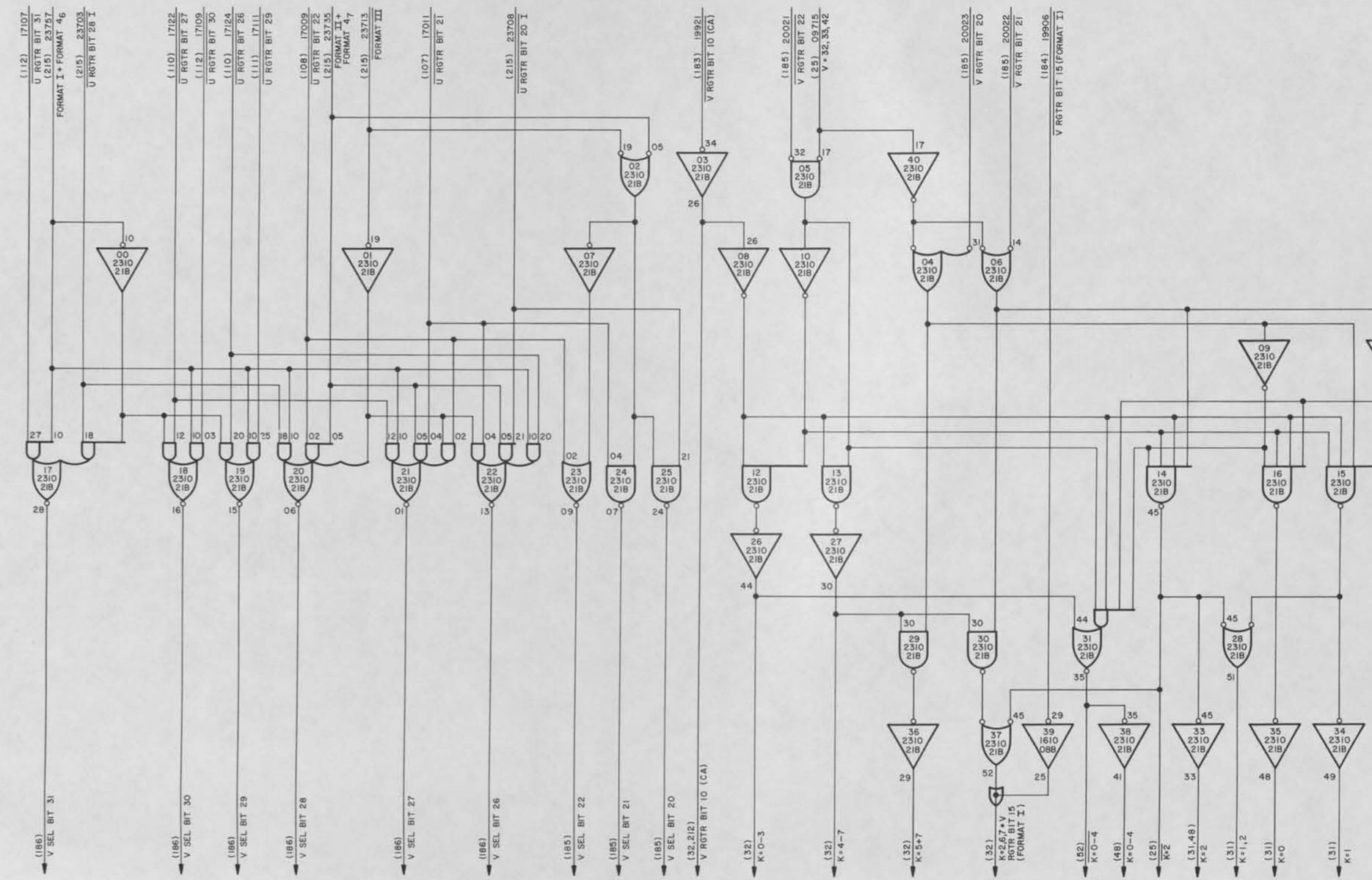

V SELECTOR, K TRANSLATOR 098

SIZE	CODE IDENT	DWG NO.
D	90536	7073539
SCALE	CLASS A	SHEET 26

DWG. NO. 7073539

UD 1-9534C

REVISIONS						
ZONE	LTR	EIR	DESCRIPTION	CHK	DATE	APPROVED
	CA	D06588	SEE EIR		12-15-72	
	CG	D10463	SEE EIR		10-9-73	

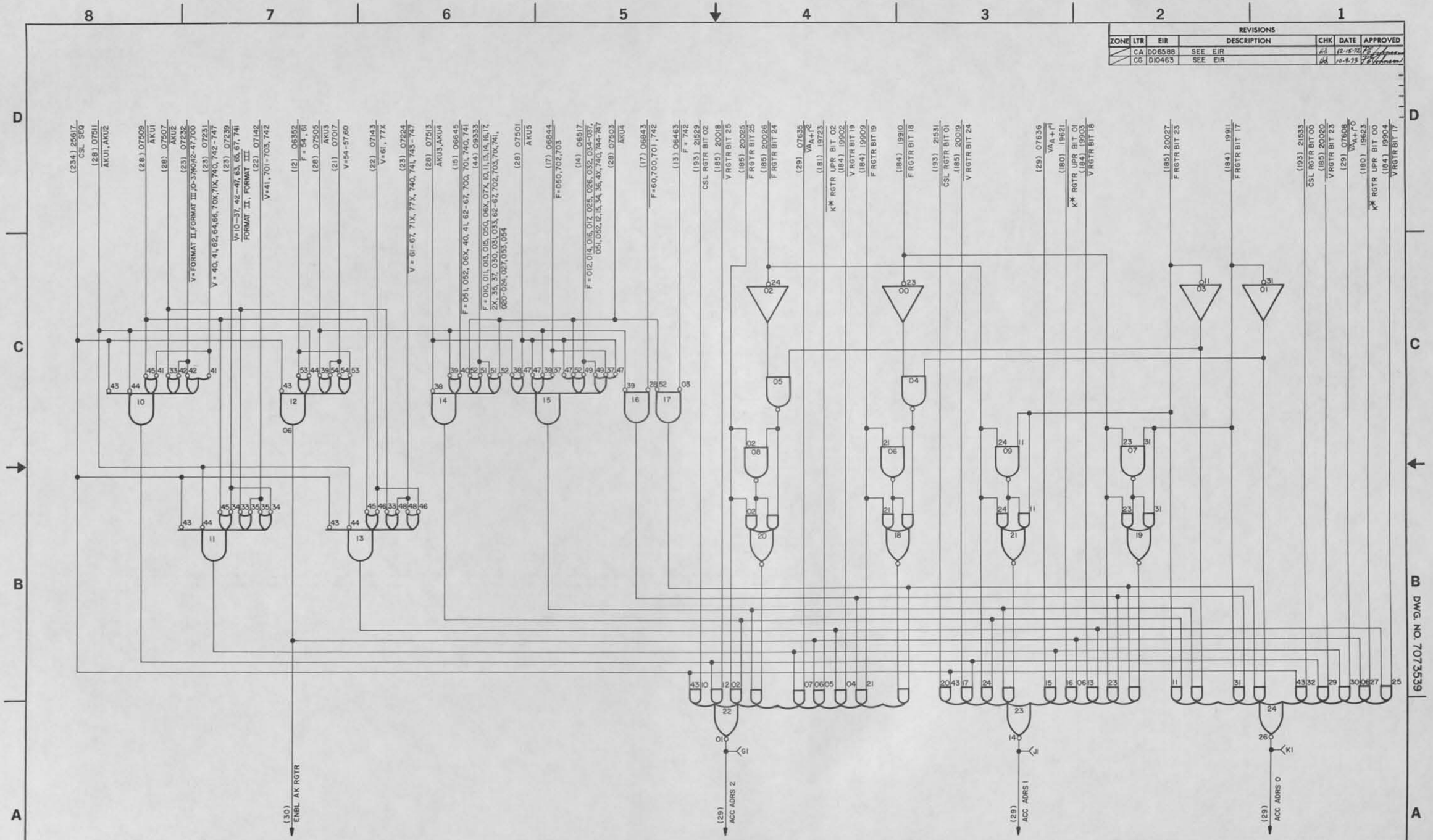

NOTE:
1. CARD TYPE - 2055
2. CARD LOCATION - 57B

CHANGE 2

ACCUMULATOR CONTROL I 074

SIZE	CODE IDENT	DWG NO.
D	90536	7073539
SCALE	CLASS A	SHEET 27

DWG. NO. 7073539

UD 1-8534C

REVISIONS						
ZONE	LTR	EIR	DESCRIPTION	CHK	DATE	APPROVED
	AJ	D05016	SEE EIR			
	AK	D05145	SEE EIR			
	AN	D05753	SEE EIR			
	BB	D05858	SEE EIR			
	CA	D06588	SEE EIR			
	CK	D09611	SEE EIR			

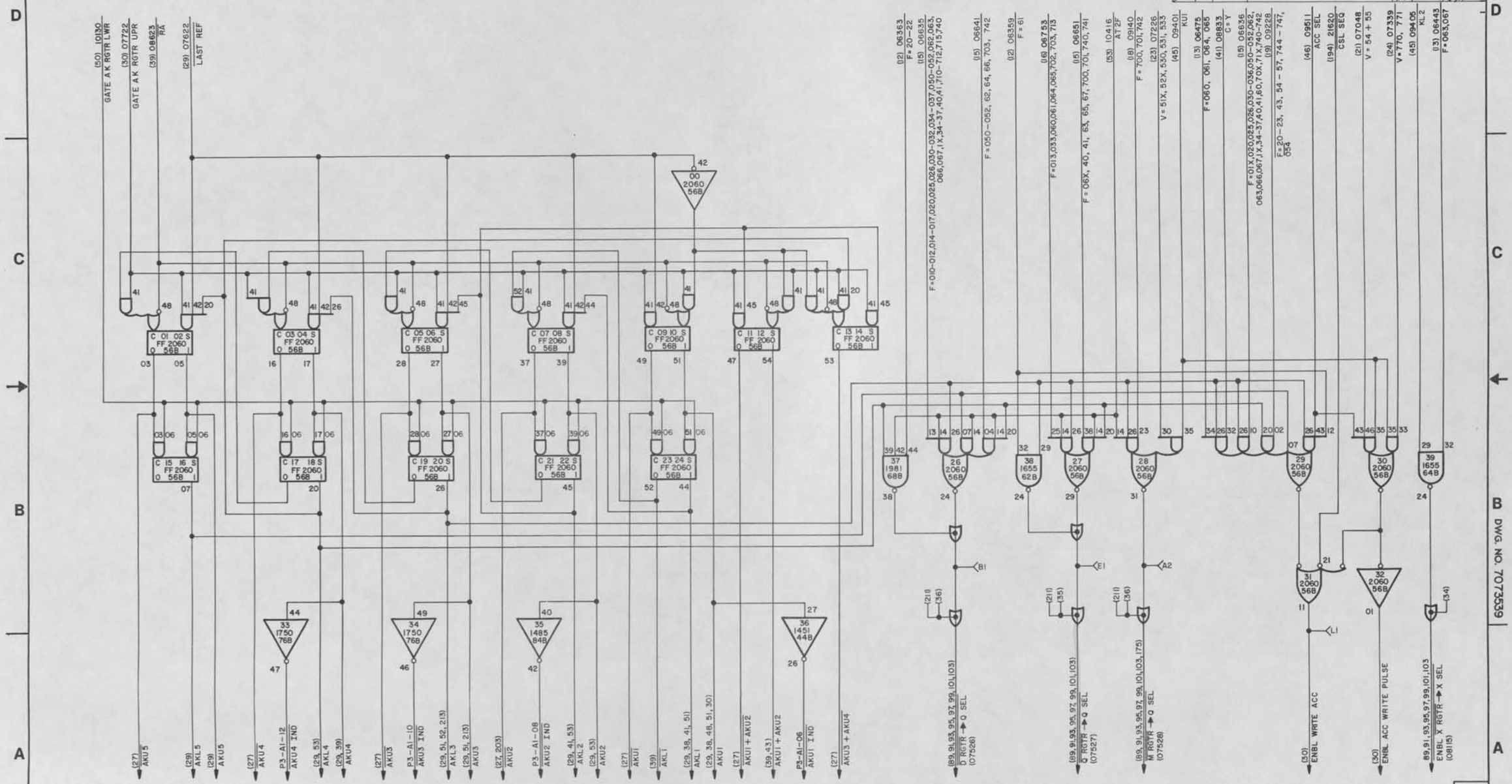

ACCUMUMULATOR CONTROL 2 075

SIZE	CODE IDENT	DWG NO.
D	90536	7073539
SCALE	CLASS A	SHEET 28

CHANGE 2

UD 1-8534C

REVISIONS						
ZONE	LTR	EIR	DESCRIPTION	CHK	DATE	APPROVED
	Y	D03399	SEE EIR		6-30-71	
	BB	D05858	SEE EIR		2-11-72	
	CA	D06588	SEE EIR		12-1-72	

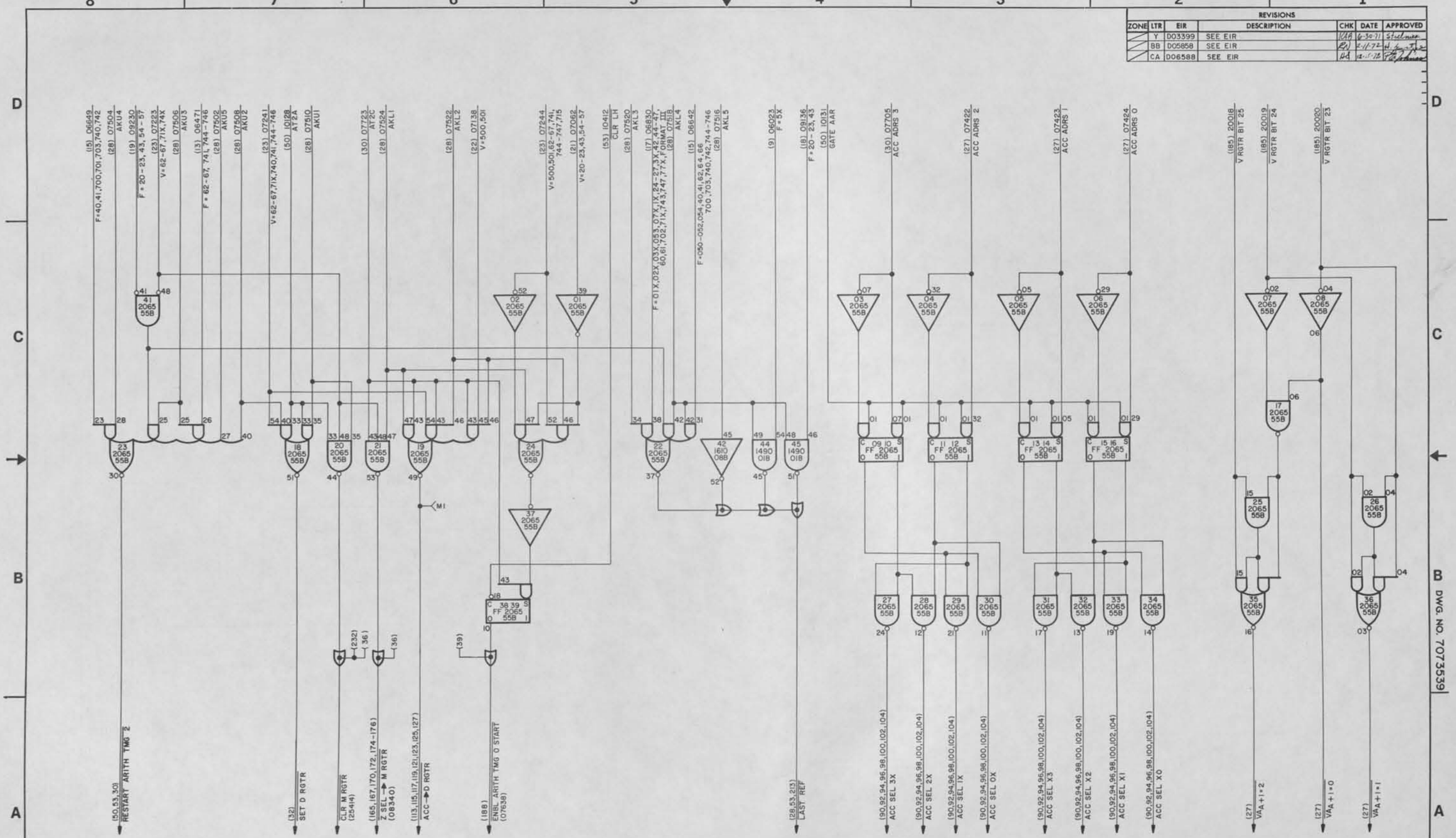

CHANGE 2

ACCUMULATOR CONTROL 3 | 076

SIZE	CODE IDENT	DWG NO.
D	90536	7073539
SCALE	CLASS A	SHEET 29

UD 1-8534C

REVISIONS						
ZONE	LTR	EIR	DESCRIPTION	CHK	DATE	APPROVED
	BB	D05858	SEE EIR		2-10-72	
	BG	D06080	SEE EIR		2-12-72	
	CA	D06588	SEE EIR		12-15-72	
	CK	D09611	SEE EIR		12-21-73	

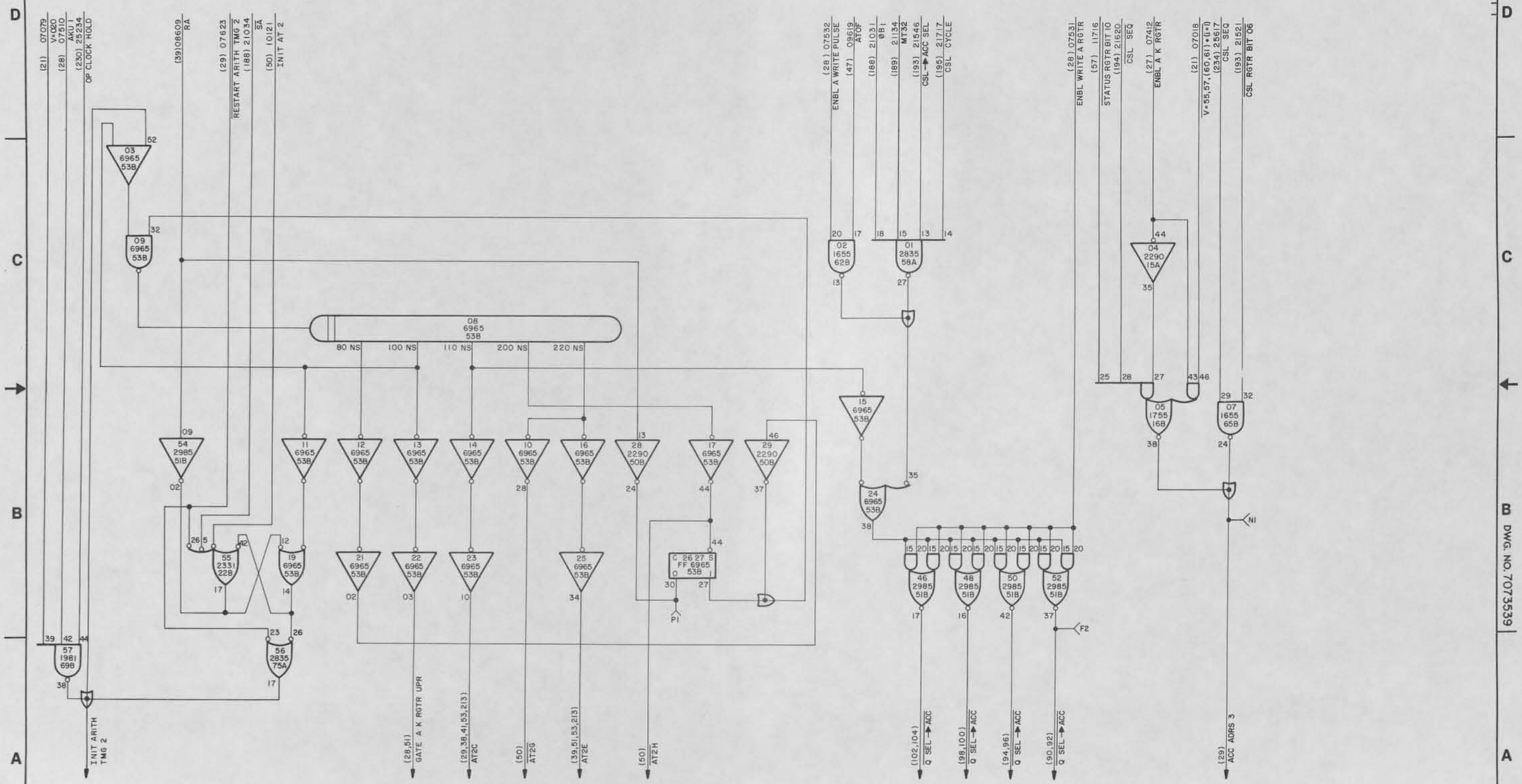

ACCUMULATOR CONTROL & DELAY LINE 077

CHANGE 2

SIZE	CODE IDENT	DWG NO.
D	90536	7073539
SCALE	CLASS A	SHEET 30

DWG. NO. 7073539

UD 1-8534C

REVISIONS						
ZONE	LTR	EIR	DESCRIPTION	CHK	DATE	APPROVED

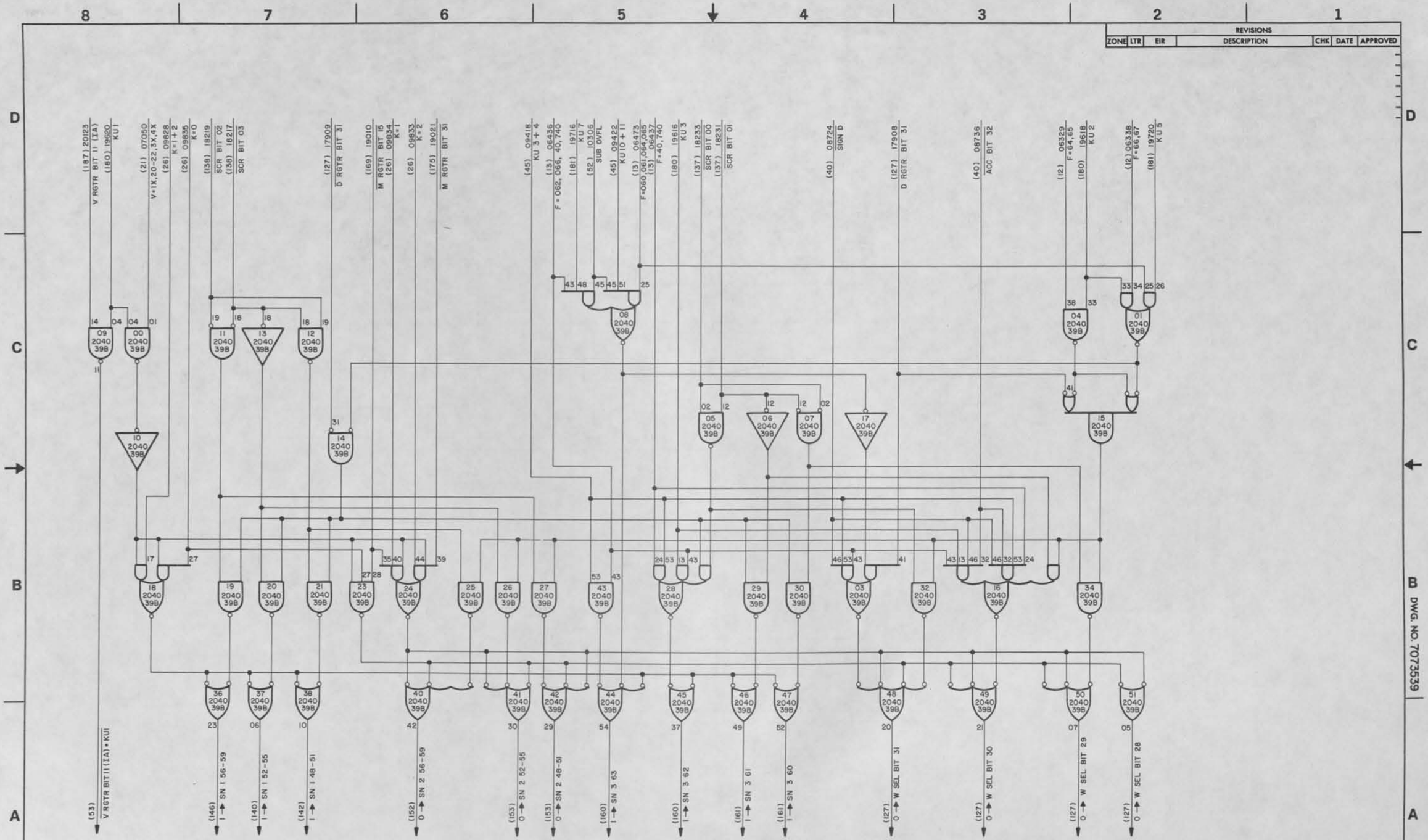

SHIFT CONTROL I 078

SIZE	CODE IDENT	DWG NO.
D	90536	7073539
SCALE	CLASS A	SHEET 3

DWG. NO. 7073539

UD 1-8534C

REVISIONS						
ZONE	LTR	EIR	DESCRIPTION	CHK	DATE	APPROVED
	Y	D03399	SEE EIR			
	BB	D05858	SEE EIR			
	CA	D06588	SEE EIR			

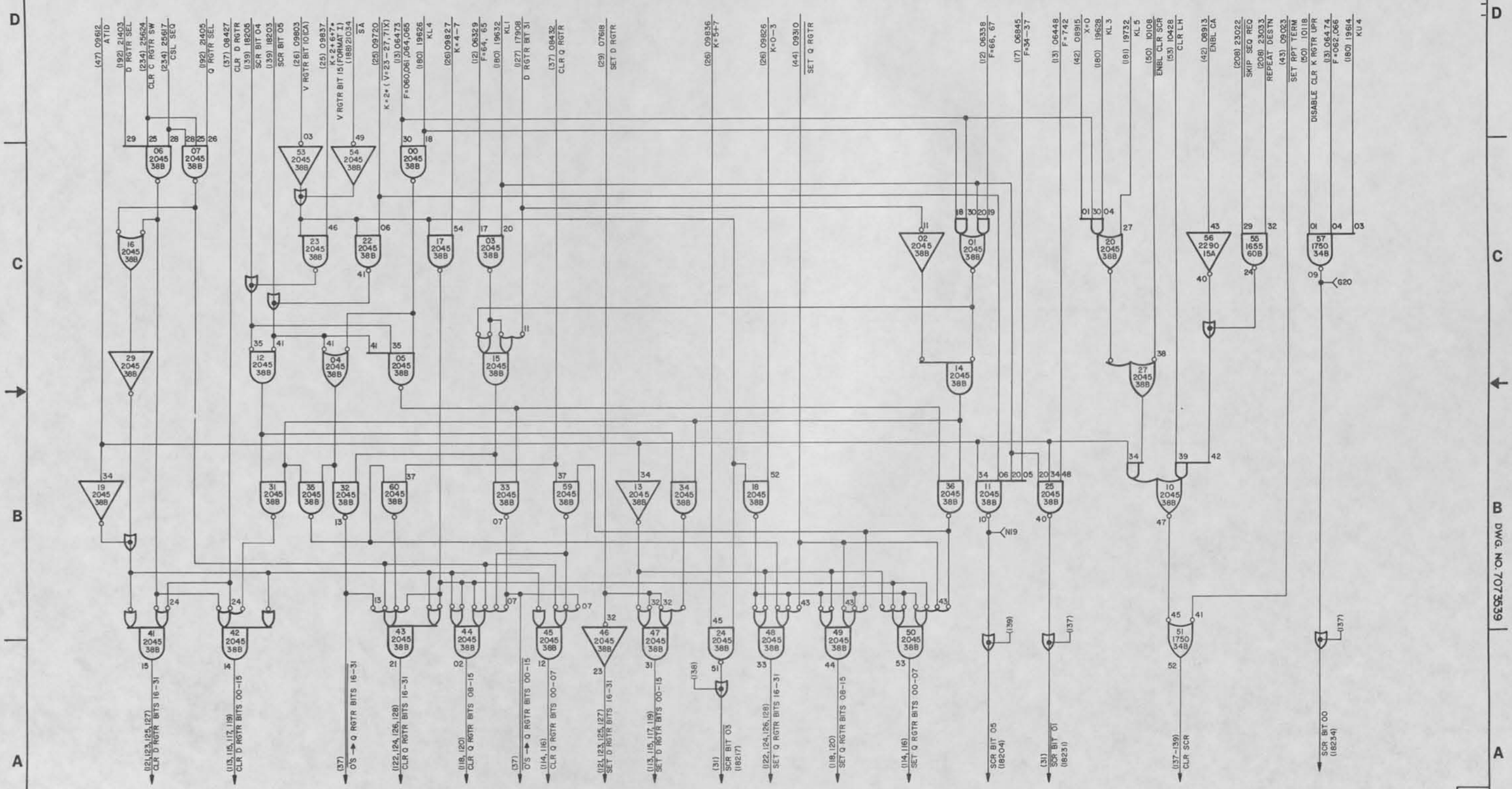

CHANGE 2

SHIFT CONTROL 2 079

SIZE	CODE IDENT	DWG NO.
D	90536	7073539
SCALE	CLASS A	SHEET 32

DWG. NO. 7073539

UD 1-2534C

REVISIONS						
ZONE	LTR	EIR	DESCRIPTION	CHK	DATE	APPROVED
	BR	D06514	SEE EIR	RSJ	2-14-72	
	CA	D06588	SEE EIR	RJS	12-15-72	

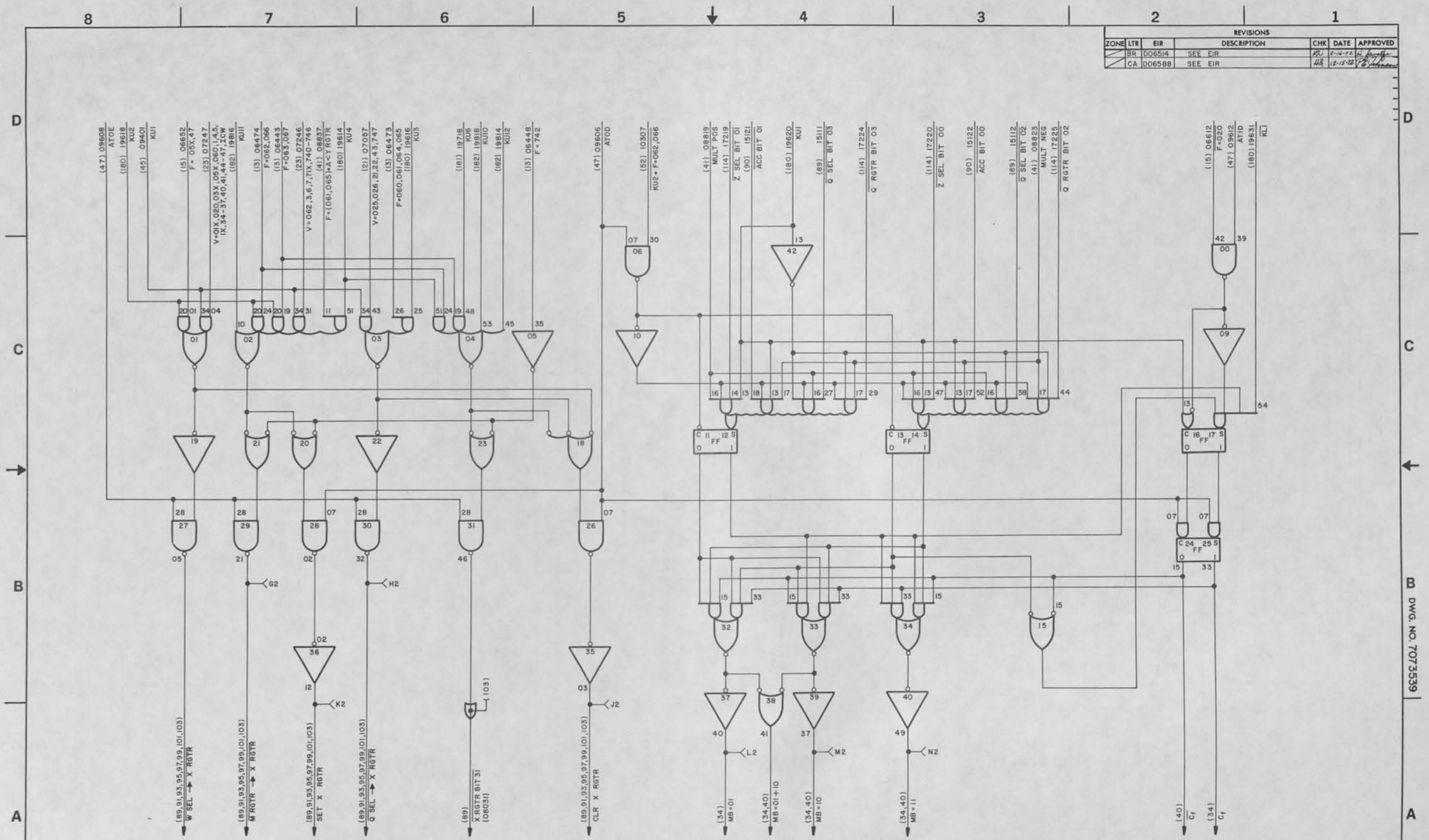

NOTES:
1. CARD TYPE — 2077
2. CARD LOCATION — 47B

X REGISTER & MULTIPLIER CONTROL 080

SIZE	CODE IDENT	DWG NO.
D	90536	7073539
SCALE	CLASS A	SHEET 33

DWG. NO. 7073539

CHANGE 2

UD 1-8534C

REVISIONS						
ZONE	LTR	EIR	DESCRIPTION	CHK	DATE	APPROVED
	AP	D05167	SEE EIR	RJ	2-2-72	
	BR	D06514	SEE EIR	RJ	2-16-72	
	CA	D06588	SEE EIR	RJ	12-15-72	

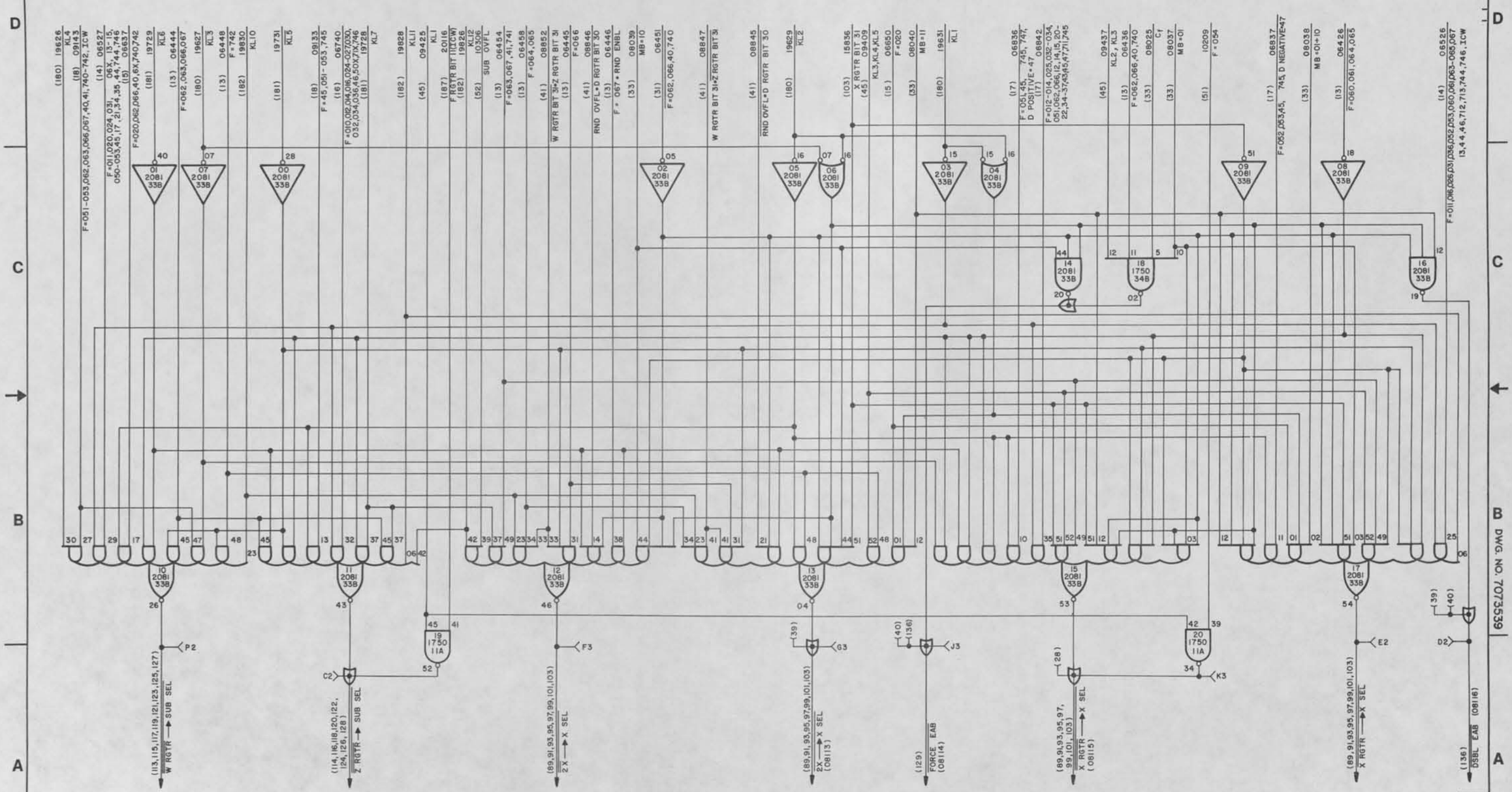

SUB & X SELECTOR CONTROL 081

SIZE	CODE IDENT	DWG NO.
D	90536	7073539
SCALE	CLASS A	SHEET 34

CHANGE 2

UD 1-8534C

REVISIONS						
ZONE	LTR	EIR	DESCRIPTION	CHK	DATE	APPROVED
	Y	D03399	SEE EIR	CAB	4-30-71	[illegible]
	BH	D06500	SEE EIR	HS	2-12-72	[illegible]
	BT	D06552	SEE EIR	BT	2-17-72	[illegible]
	CA	D06588	SEE EIR	LB	12-15-72	[illegible]
	CC	D06701	SEE EIR	LB	7-18-73	[illegible]

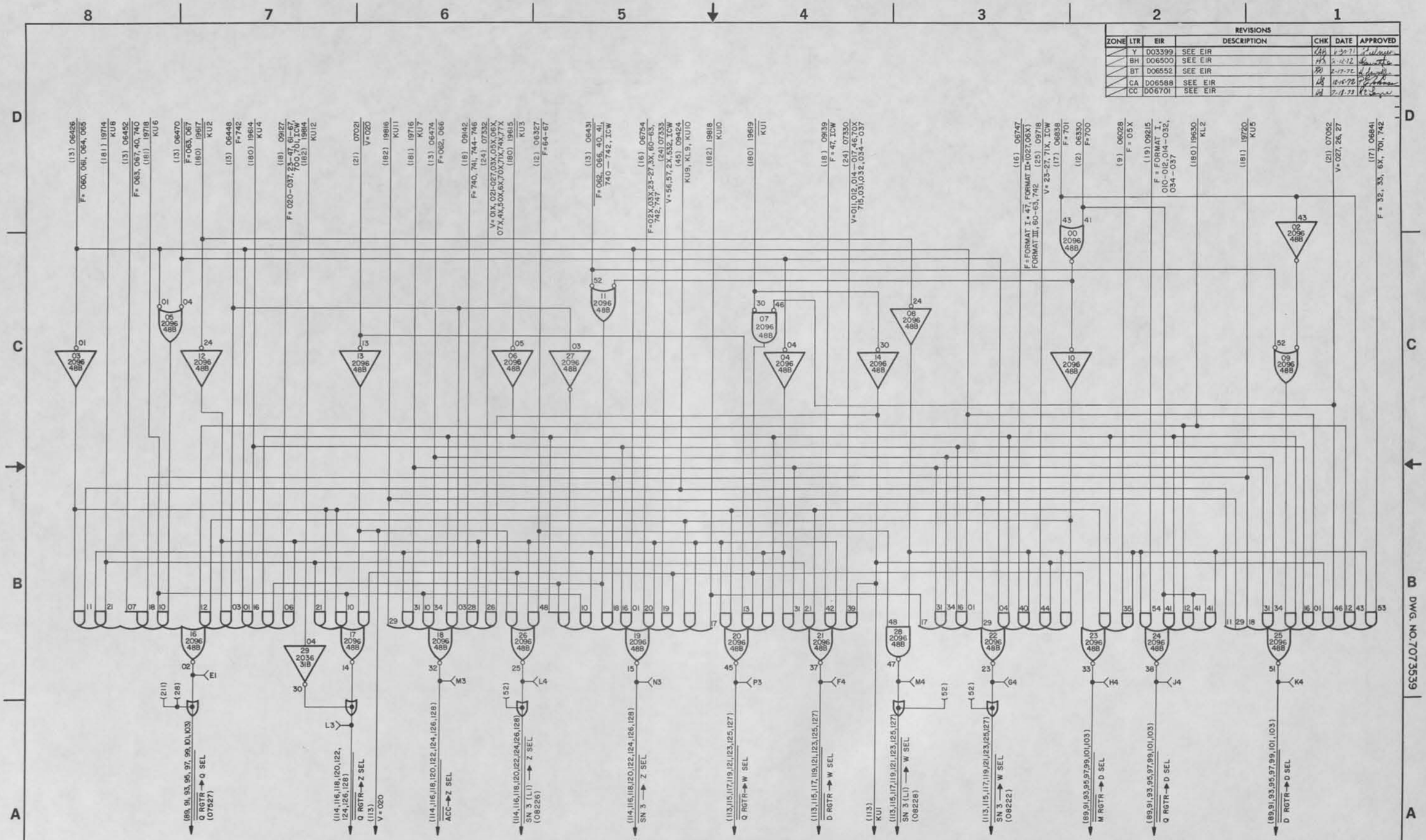

CHANGE 2

D, Q, W & Z SELECTOR CONTROL 082

SIZE	CODE IDENT	DWG NO.
D	90536	7073539
SCALE	CLASS A	SHEET 35

DWG. NO. 7073539

UD 1-2534C

REVISIONS						
ZONE	LTR	EIR	DESCRIPTION	CHK	DATE	APPROVED
	Y	D03399	SEE EIR	KAB	6-30-71	[illegible]
	BR	D06514	SEE EIR	RW	5-16-72	[illegible]

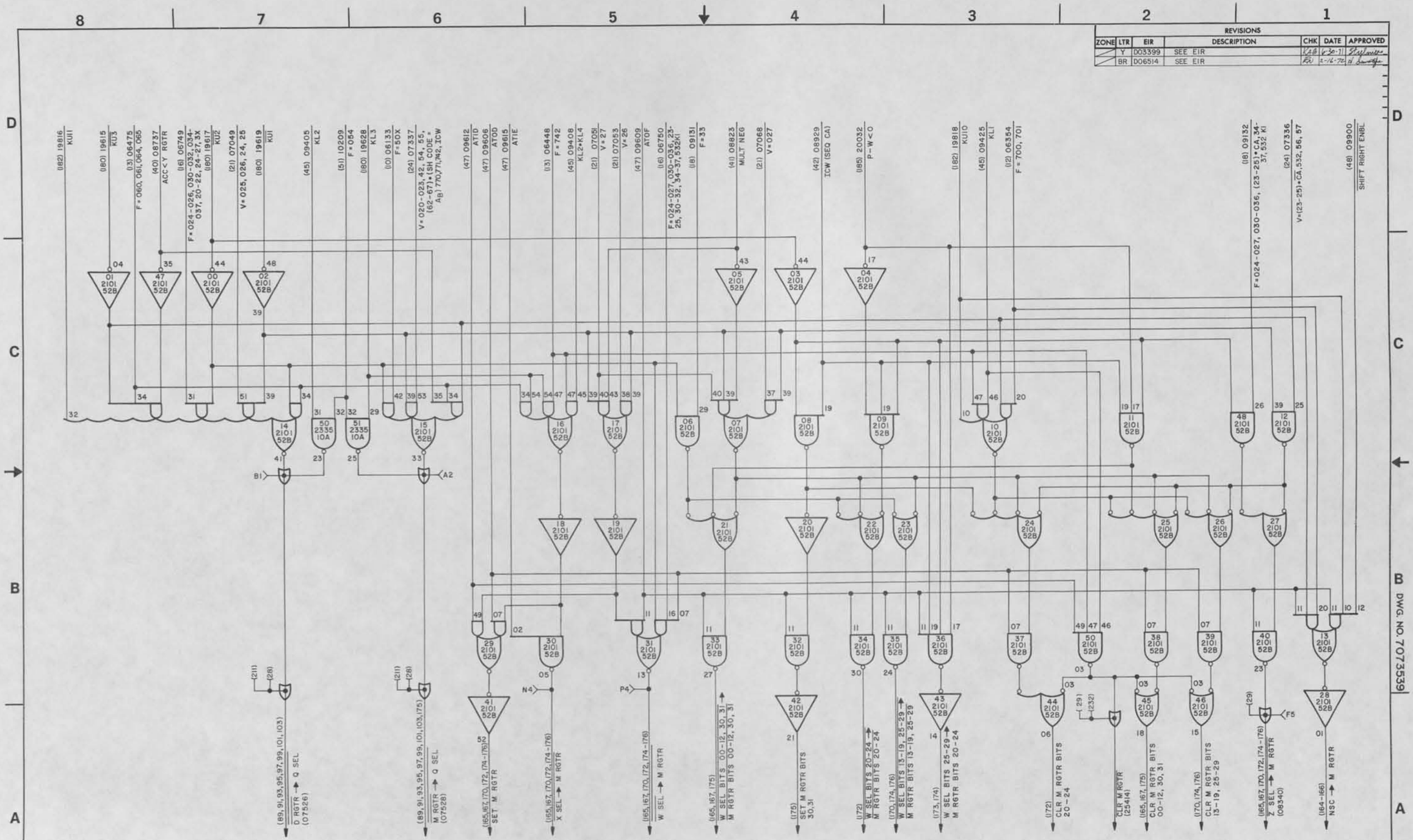

M REGISTER & Q SELECTOR CONTROL 083

SIZE	CODE IDENT	DWG NO.
D	90536	7073539
SCALE	CLASS A	SHEET 36

DWG. NO. 7073539

UD 1-8534C

REVISIONS						
ZONE	LTR	EIR	DESCRIPTION	CHK	DATE	APPROVED
	BE	D06054	SEE EIR		2-16-70	
	CA	D06588	SEE EIR		12-15-71	

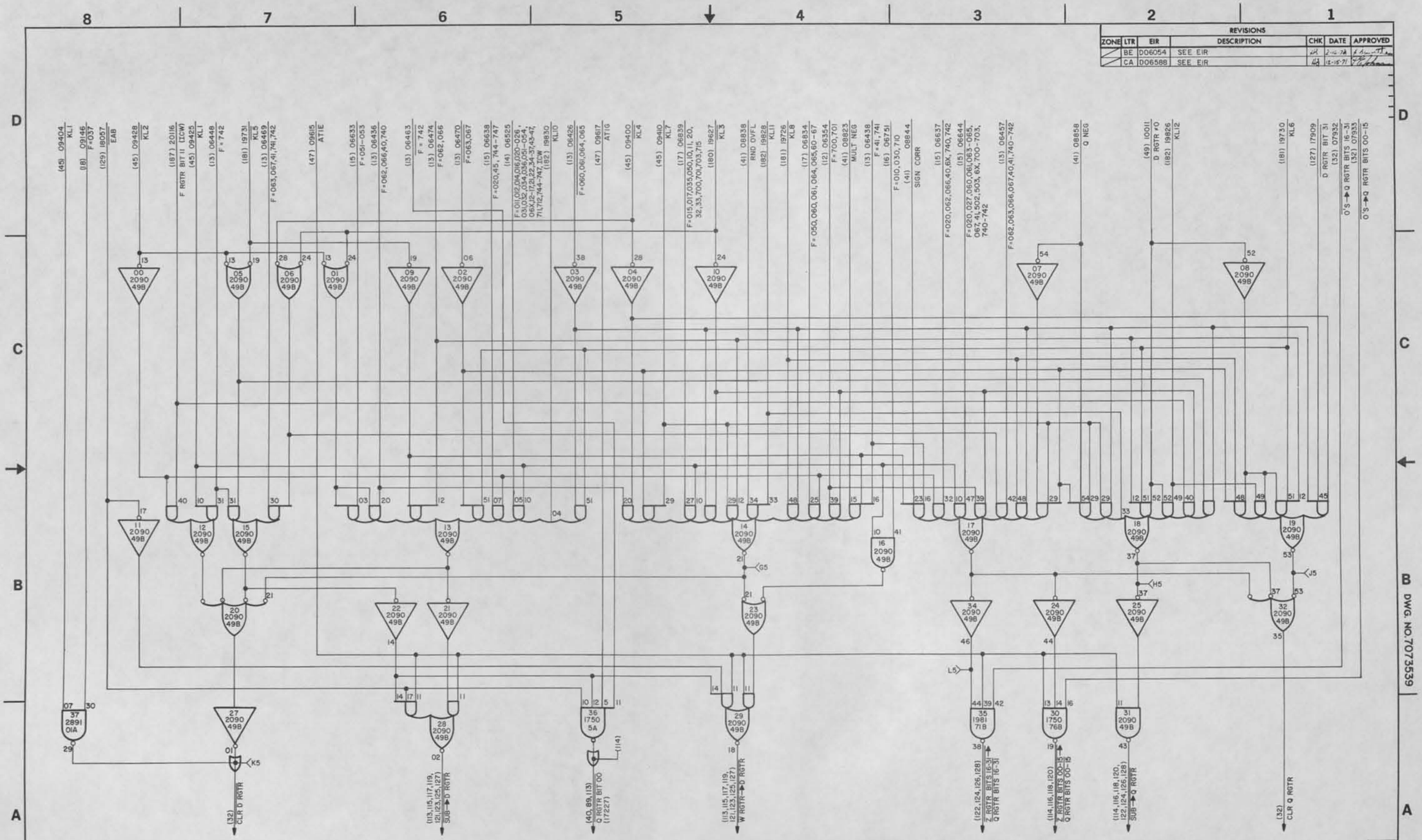

D & Q REGISTER CONTROLS 084

SIZE	CODE IDENT	DWG NO.
D	90536	7073539
SCALE	CLASS A	SHEET 37

DWG. NO. 7073539

CHANGE 2

UD 1-8534C

REVISIONS						
ZONE	LTR	EIR	DESCRIPTION	CHK	DATE	APPROVED
	BR	D06514	SEE EIR	RBJ	2-16-72	
	CA	D06588	SEE EIR	HB	2-18-72	

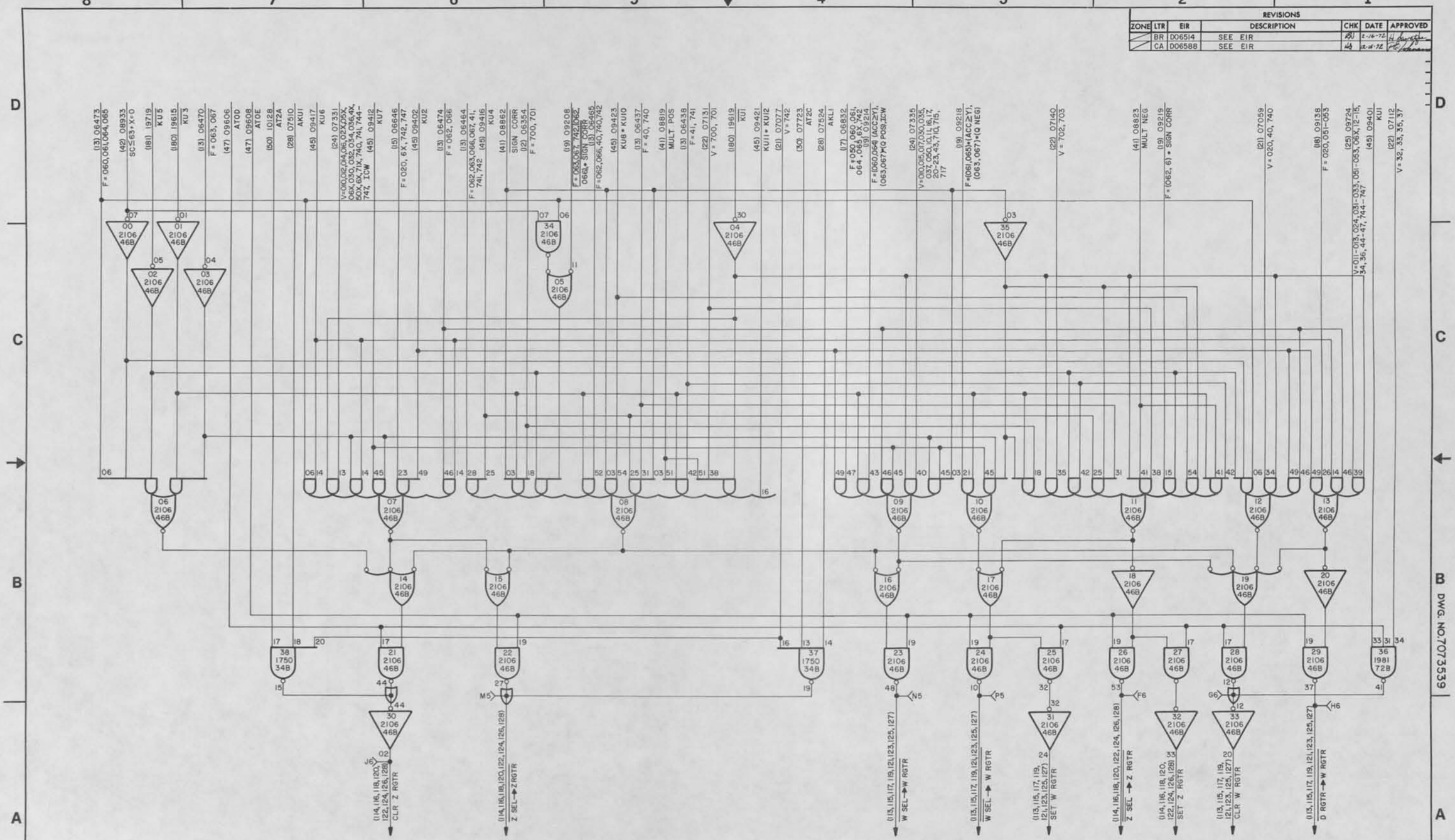

W & Z REGISTER CONTROL 085

SIZE	CODE IDENT	DWG NO.
D	90536	7073539
SCALE	CLASS A	SHEET 38

DWG. NO. 7073539

CHANGE 2

UD 1-8534C

REVISIONS						
ZONE	LTR	EIR	DESCRIPTION	CHK	DATE	APPROVED
	Y	D03399	SEE EIR	VAO	1-31-72	[illegible]
	AH	D04915	SEE EIR	RJ	1-31-72	[illegible]
	AP	D05167	SEE EIR	RJ	2-2-72	[illegible]
	BB	D05858	SEE EIR	RJ	2-15-72	[illegible]
	BP	D06515	SEE EIR	RJ	2-16-72	[illegible]
	BT	D06552	SEE EIR	RJ	2-17-72	[illegible]
	CA	D06588	SEE EIR	RJ	2-16-72	[illegible]

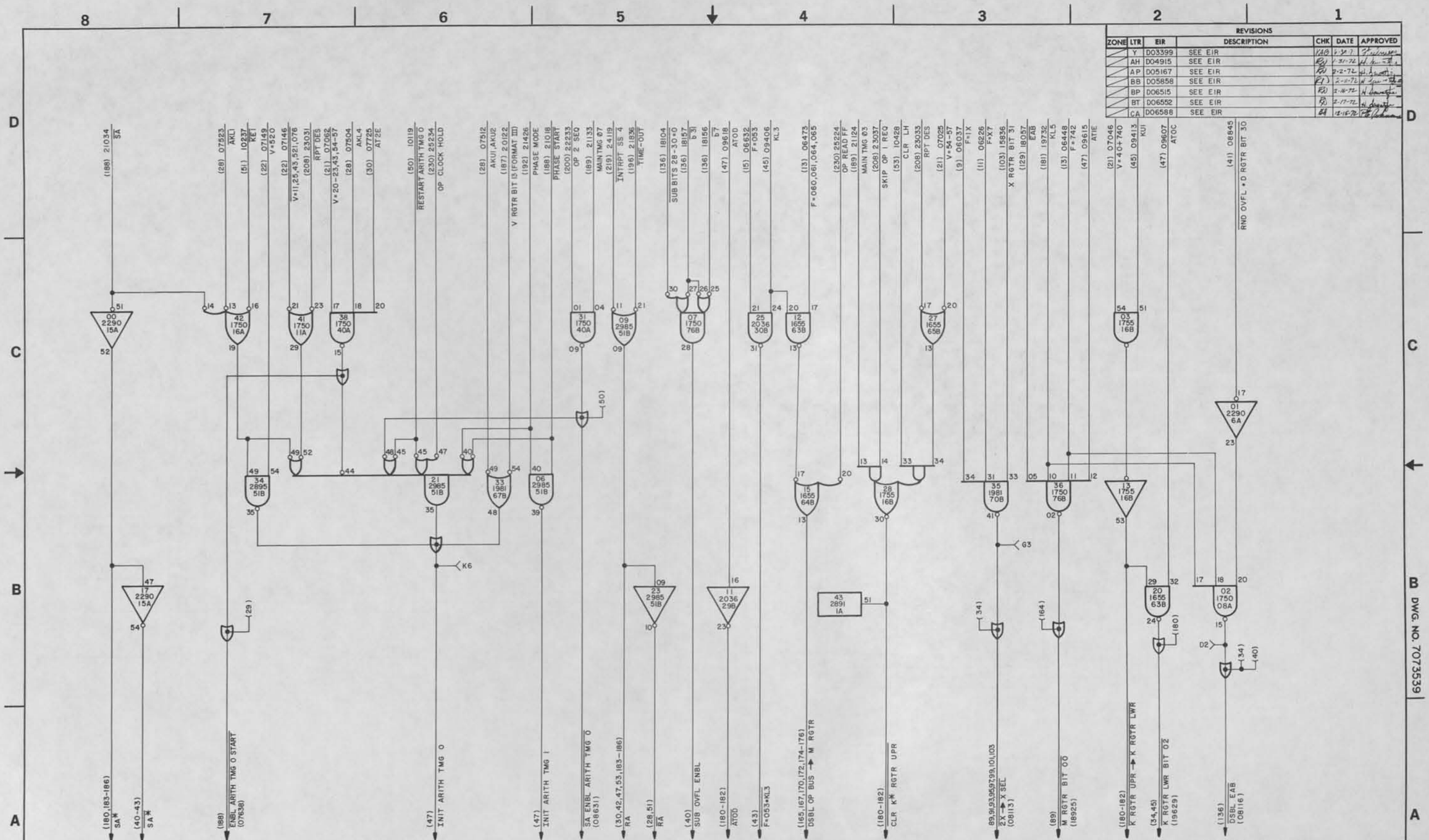

REVISIONS						
ZONE	LTR	EIR	DESCRIPTION	CHK	DATE	APPROVED
	Y	D03399	SEE EIR		6-30-71	
	AP	D05167	SEE EIR		2-2-72	
	BJ	D06509	SEE EIR		2-14-72	
	BT	D06552	SEE EIR		2-17-72	
	CA	D06588	SEE EIR		12-15-72	

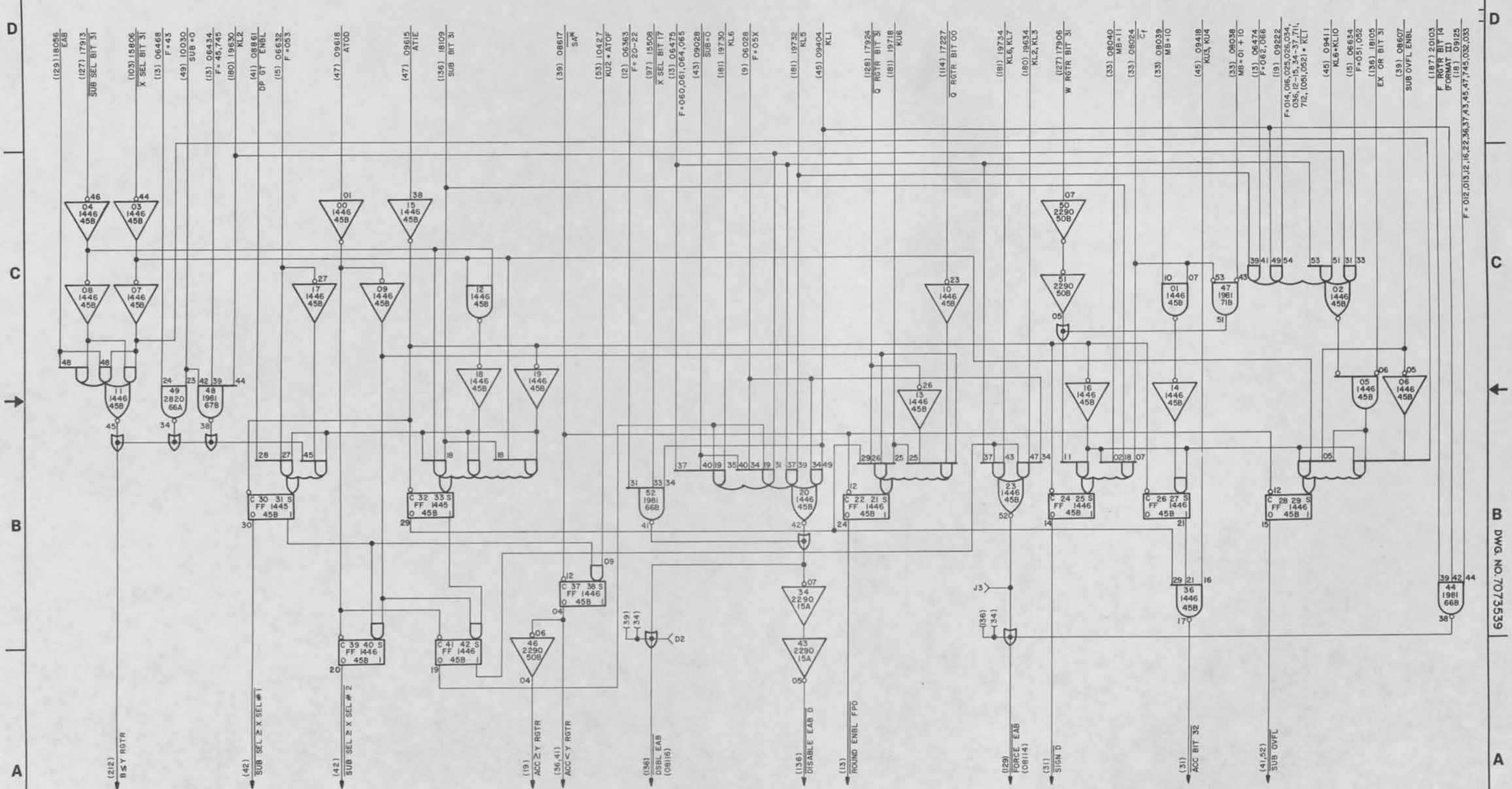

ARITHMETIC DETECTION CIRCUIT I 087

SIZE	CODE IDENT	DWG NO.
D	90536	7073539
SCALE	CLASS A	SHEET 40

DWG. NO. 7073539

CHANGE 2

UD 1-8534C

REVISIONS						
ZONE	LTR	EIR	DESCRIPTION	CHK	DATE	APPROVED
	AP	D05167	SEE EIR			
	BB	D05858	SEE EIR			
	CA	D06588	SEE EIR			
	CG	D10463	SEE EIR			

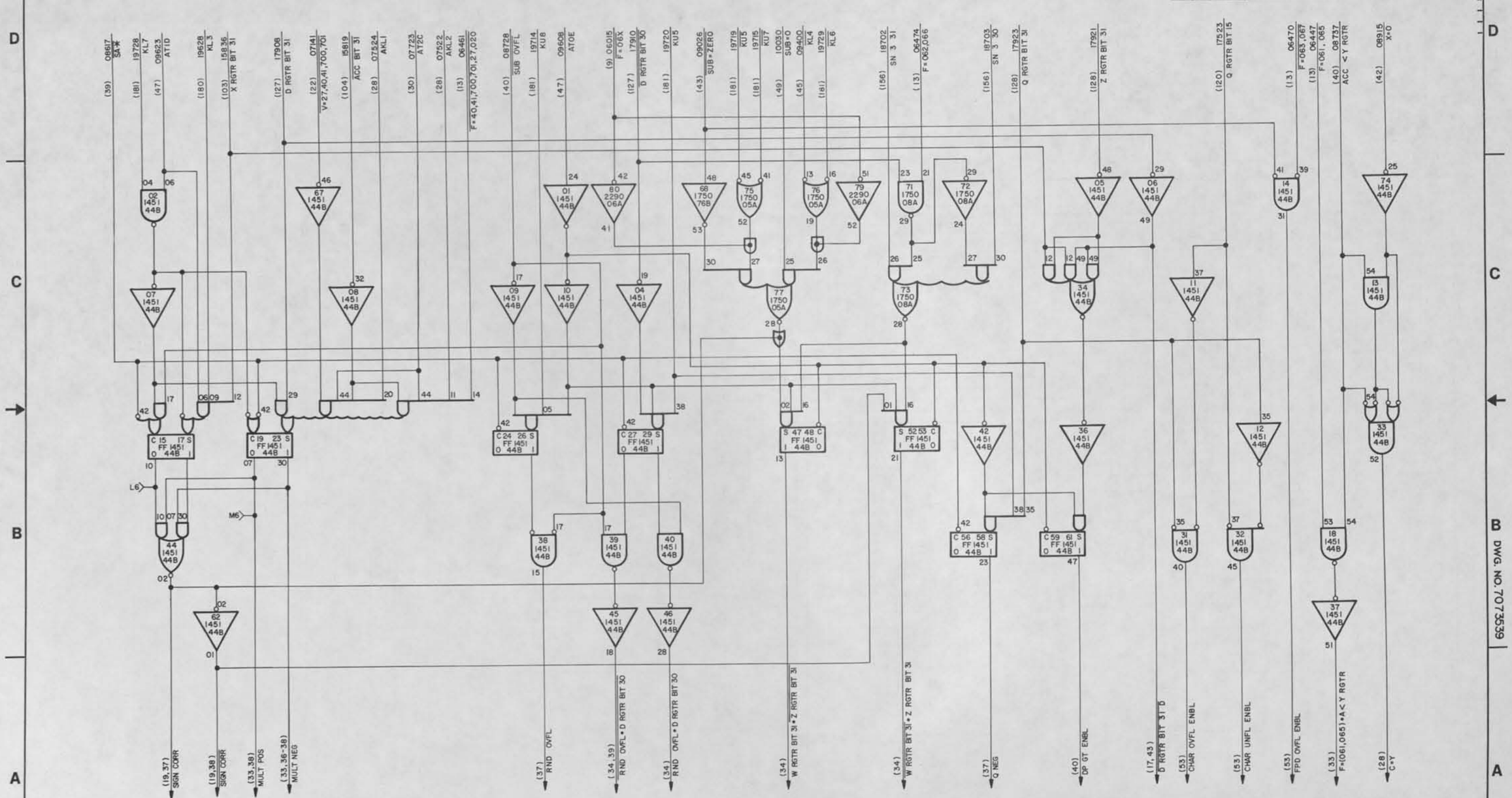

ARITHMETIC DETECTION CIRCUIT 2 | 088

SIZE	CODE IDENT	DWG NO.
D	90536	7073539
SCALE	CLASS A	SHEET 4

CHANGE 2

UD 1-8534C

REVISIONS						
ZONE	LTR	EIR	DESCRIPTION	CHK	DATE	APPROVED
	AL	D05168	SEE EIR		2-1-72	
	BB	D05858	SEE EIR		2-11-72	
	BN	D06513	SEE EIR		2-15-72	
	CA	D06588	SEE EIR		12-16-72	
	CG	D10463	SEE EIR		10-9-73	

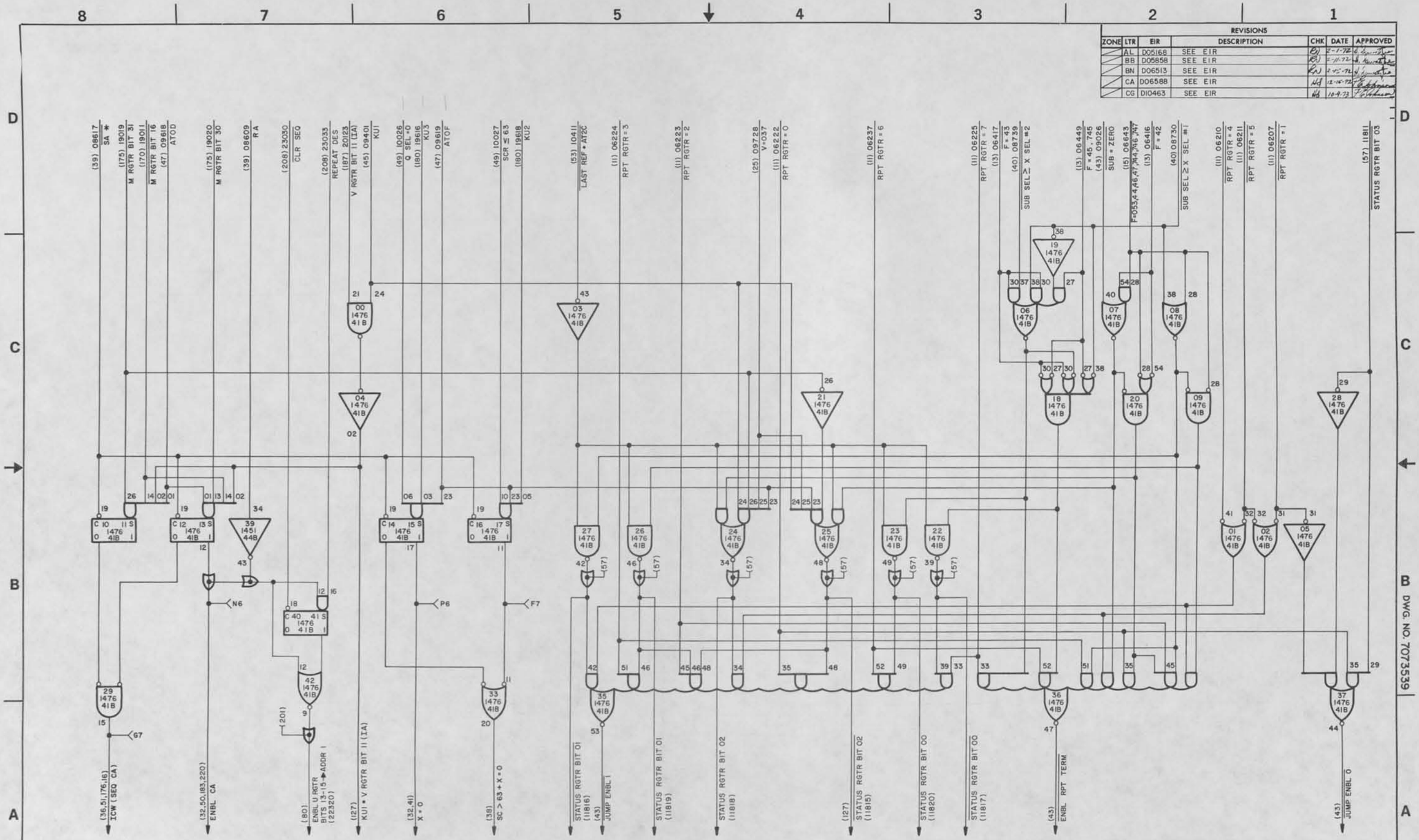

ARITHMETIC DETECTION CIRCUITS 3 | 089

CHANGE 2

SIZE	CODE IDENT	DWG NO.
D	90536	7073539
SCALE	CLASS A	SHEET 42

DWG. NO. 7073539

UD 1-8534C

REVISIONS						
ZONE	LTR	EIR	DESCRIPTION	CHK	DATE	APPROVED
	AK	D05145	SEE EIR		2-1-72	
	AN	D05753	SEE EIR		2-2-72	
	AP	D05167	SEE EIR		2-2-72	
	AV	D05780	SEE EIR		2-7-72	
	BT	D06552	SEE EIR		2-17-72	
	CA	D06588	SEE EIR		12-16-72	

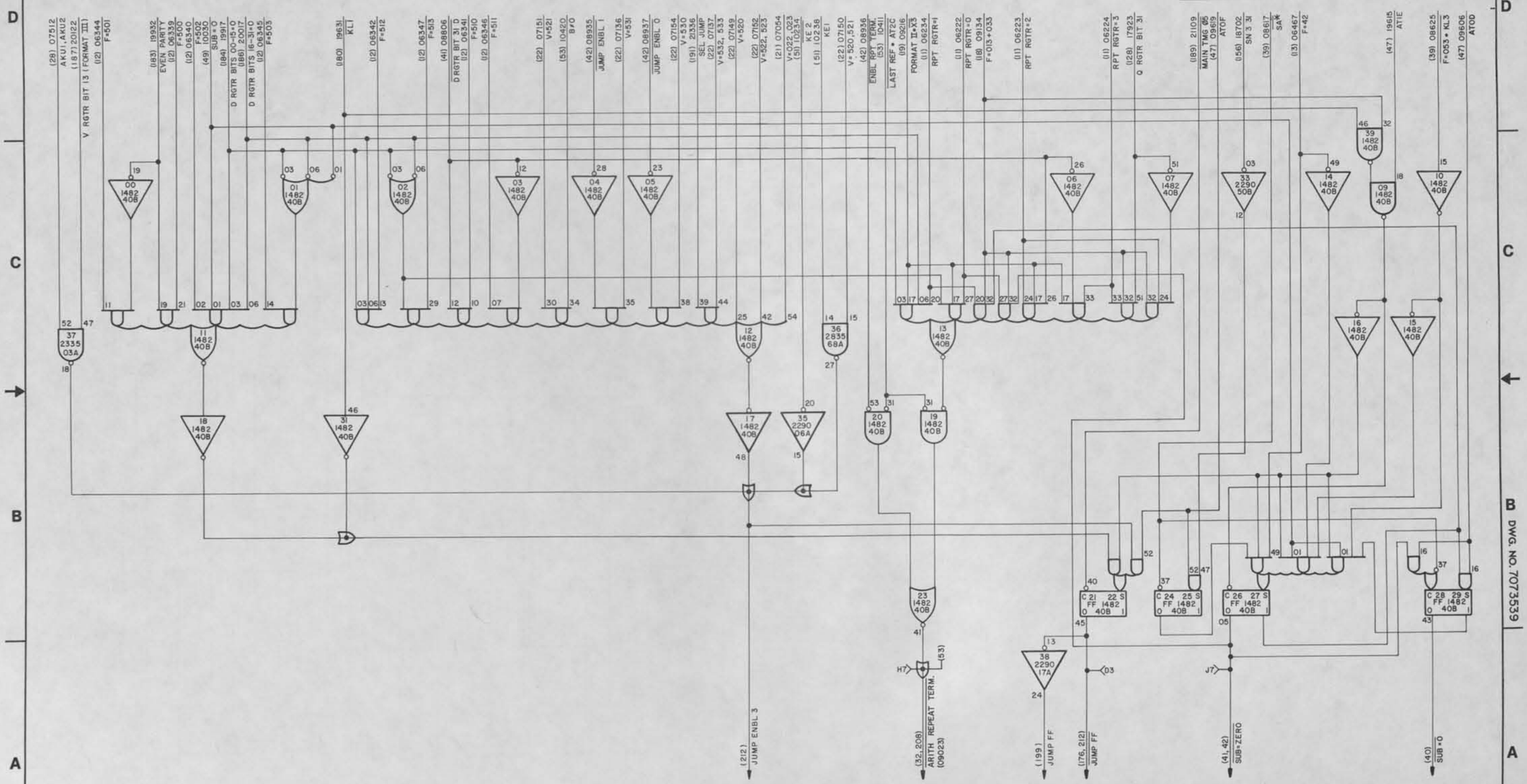

ARITHMETIC DETECTION CIRCUITS 4 090

SIZE	CODE IDENT	DWG NO.
D	90536	7073539
SCALE	CLASS A	SHEET 43

DWG. NO. 7073539

CHANGE 2

UD 1-2534C

REVISIONS						
ZONE	LTR	EIR	DESCRIPTION	CHK	DATE	APPROVED
	BT	D06552	SEE EIR	RD	2-16-72	[illegible]
	CA	D06588	SEE EIR	HB	12-15-72	[illegible]
	CB	D08599	SEE EIR	HB	7-16-73	[illegible]

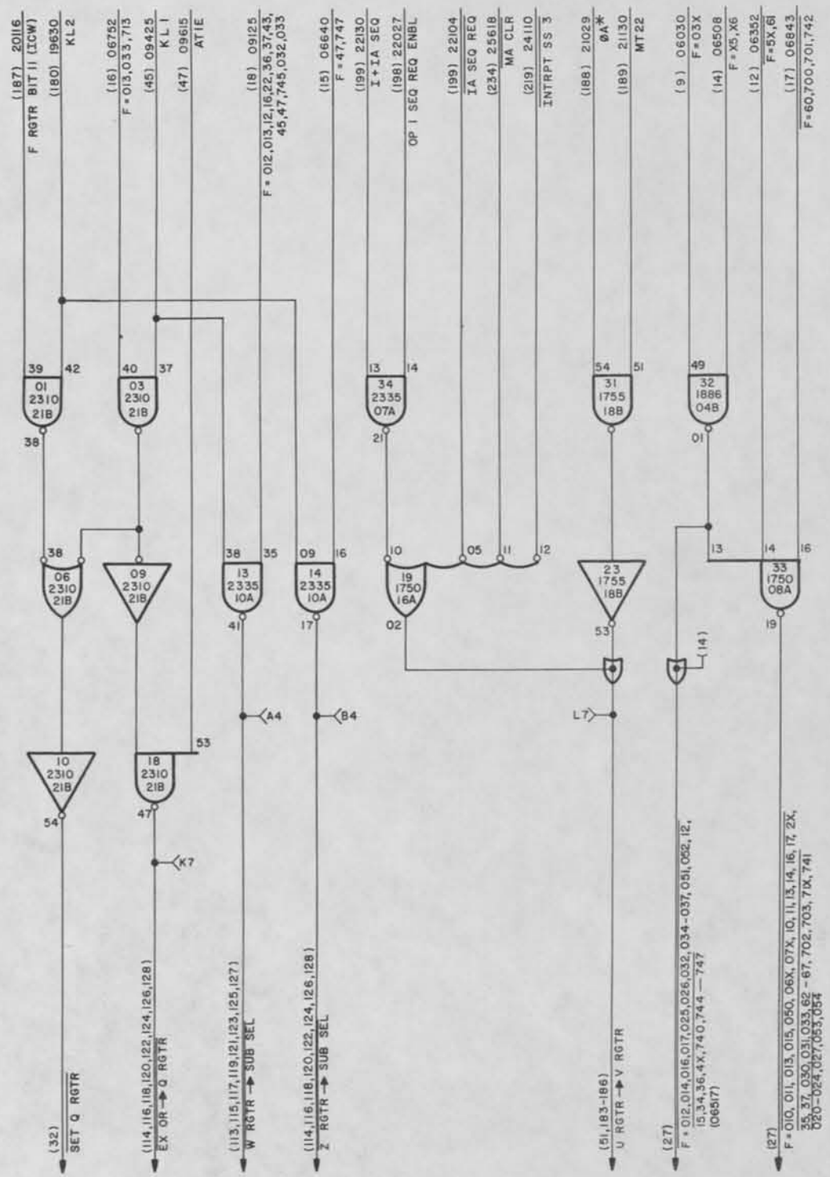

CHANGE 2

MISCELLANEOUS ARITHMETIC CONTROL 2 — 093

SIZE	CODE IDENT	DWG NO.
D	90536	7073539
SCALE	CLASS A	SHEET 44

DWG. NO. 7073539

UD 1-8534C

REVISIONS						
ZONE	LTR	EIR	DESCRIPTION	CHK	DATE	APPROVED
	BB	D05858	SEE EIR	RJ	2-18-72	H. Rumsey
	BT	D06552	SEE EIR	RJ	8-15-72	H. Rumsey

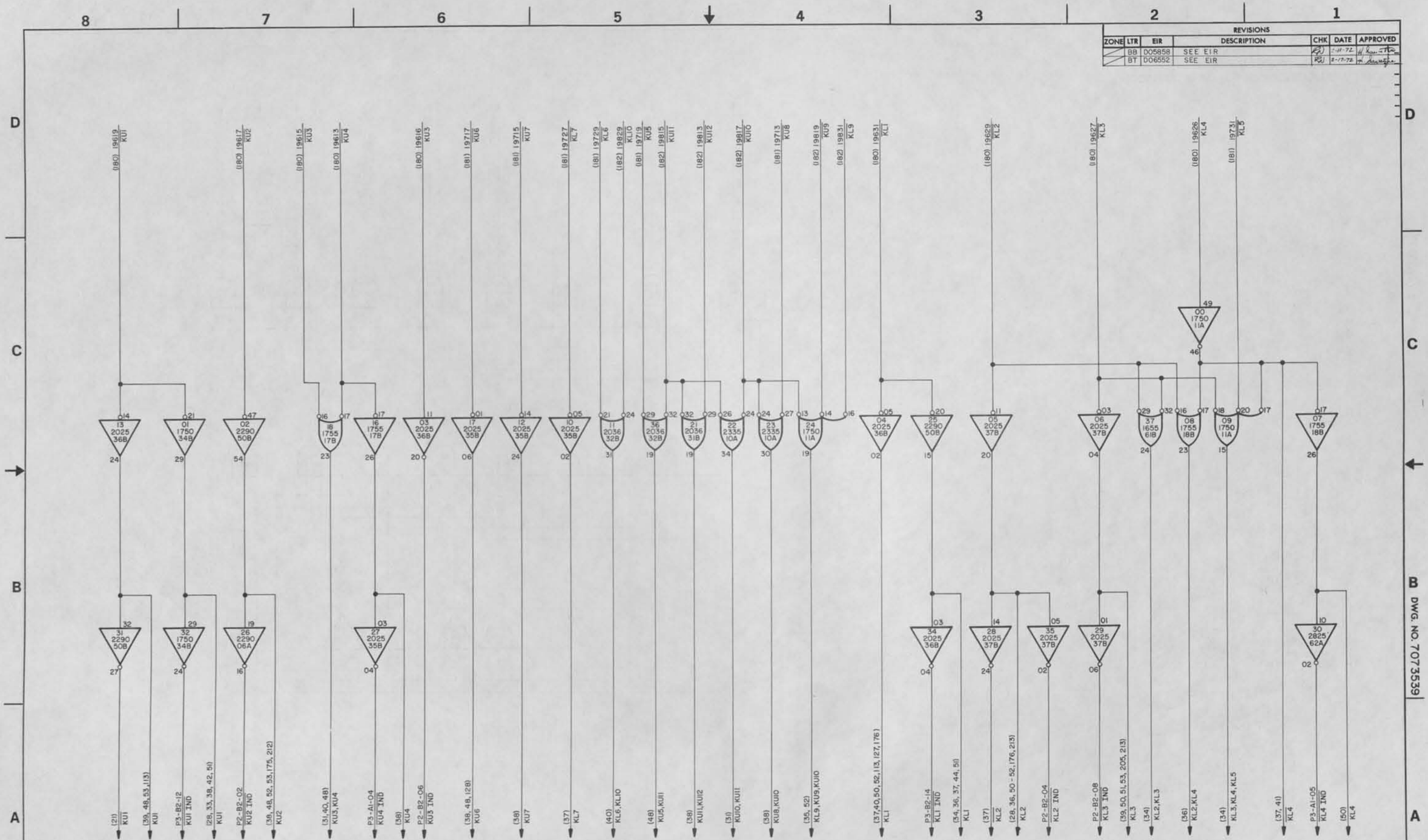

K FANOUT & COMBINATION 094

SIZE	CODE IDENT	DWG NO.
D	90536	7073539
SCALE	CLASS A	SHEET 45

DWG. NO. 7073539

UD 1-8534C

REVISIONS						
ZONE	LTR	EIR	DESCRIPTION	CHK	DATE	APPROVED
	BB	D05858	SEE EIR	RJ	2-8-72	H. Lewis
	BU	D06551	SEE EIR	RJ	2-17-72	H. Lewis

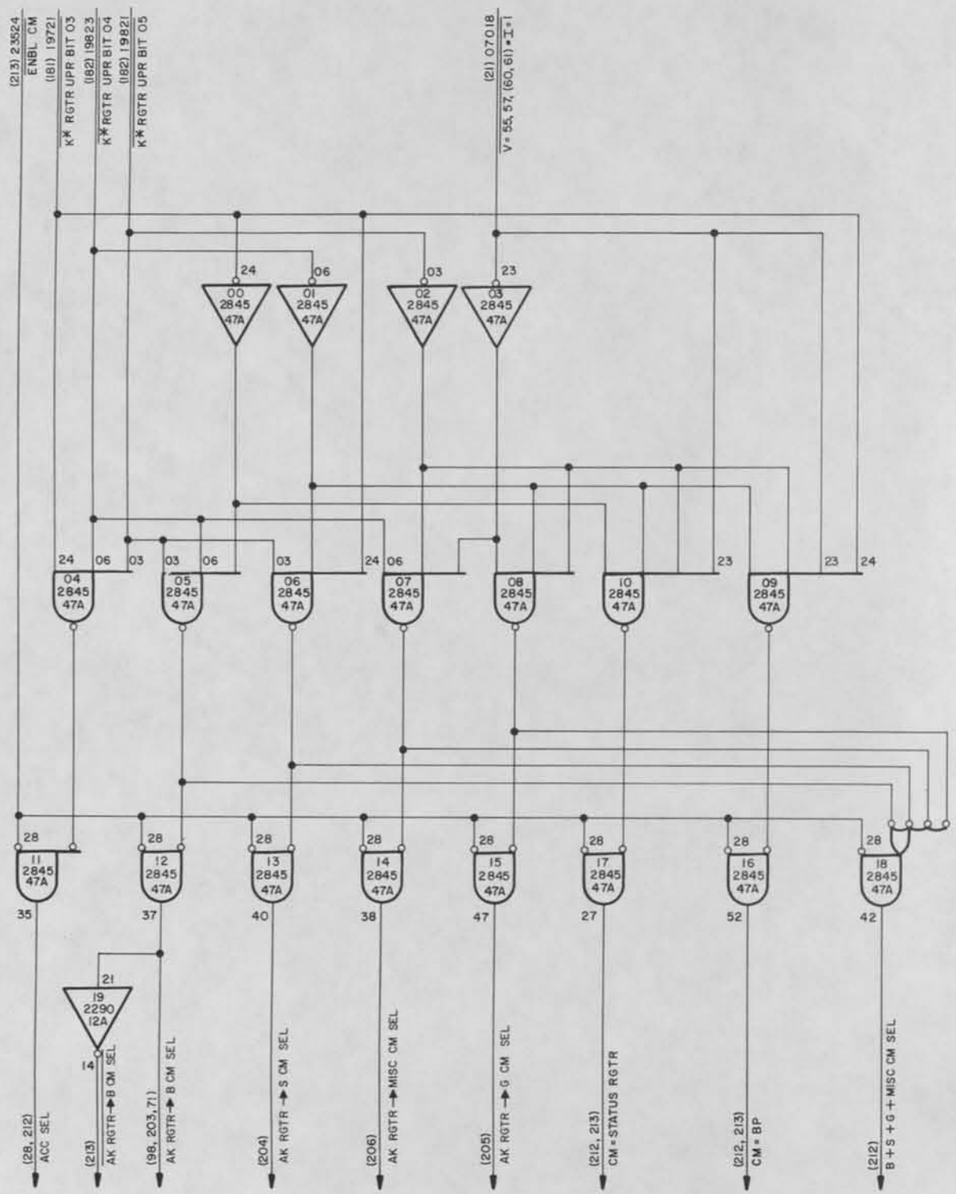

CONTROL MEMORY ARITHMETIC SELECT 095

SIZE	CODE IDENT	DWG NO.
D	90536	7073539
SCALE	CLASS A	SHEET 46

DWG. NO. 7073539

UD 1-8534C

REVISIONS						
ZONE	LTR	EIR	DESCRIPTION	CHK	DATE	APPROVED
	AJ	D05016	SEE EIR		1-31-72	
	AK	D05145	SEE EIR		2-1-72	
	AY	D05804	SEE EIR		2-8-72	
	BT	D06552	SEE EIR		2-17-72	
	BW	D06597	SEE EIR		2-18-72	
	CA	D06588	SEE EIR		12-15-72	
	CG	D10463	SEE EIR		10-9-73	

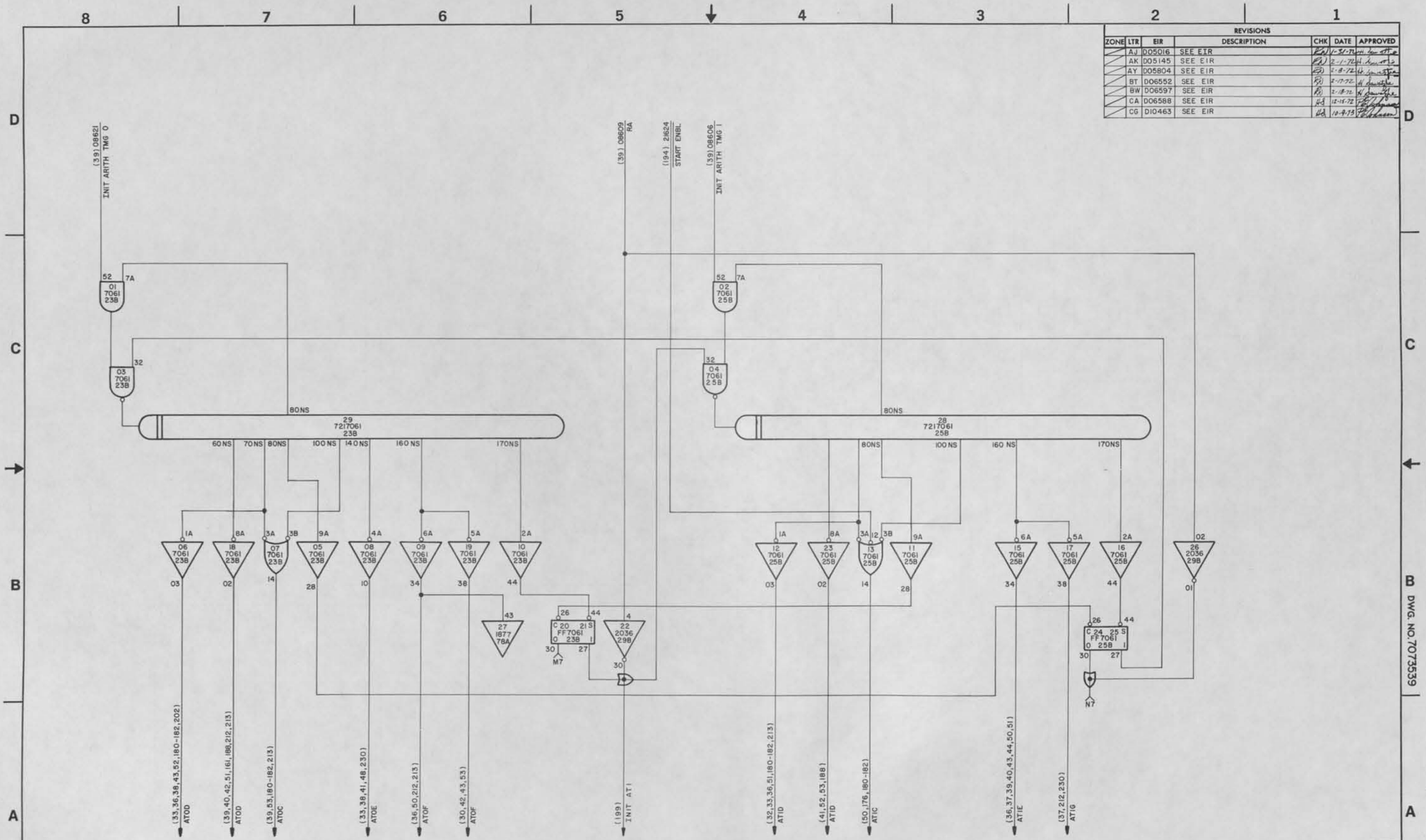

CHANGE 2

ARITHMETIC TIMING 0 & 1 | 096

SIZE	CODE IDENT	DWG NO.
D	90536	7073539
SCALE	CLASS	SHEET 47

DWG. NO. 7073539

UD 1-8534C

REVISIONS						
ZONE	LTR	EIR	DESCRIPTION	CHK	DATE	APPROVED
	CK	D09611	SEE EIR		12-27-73	

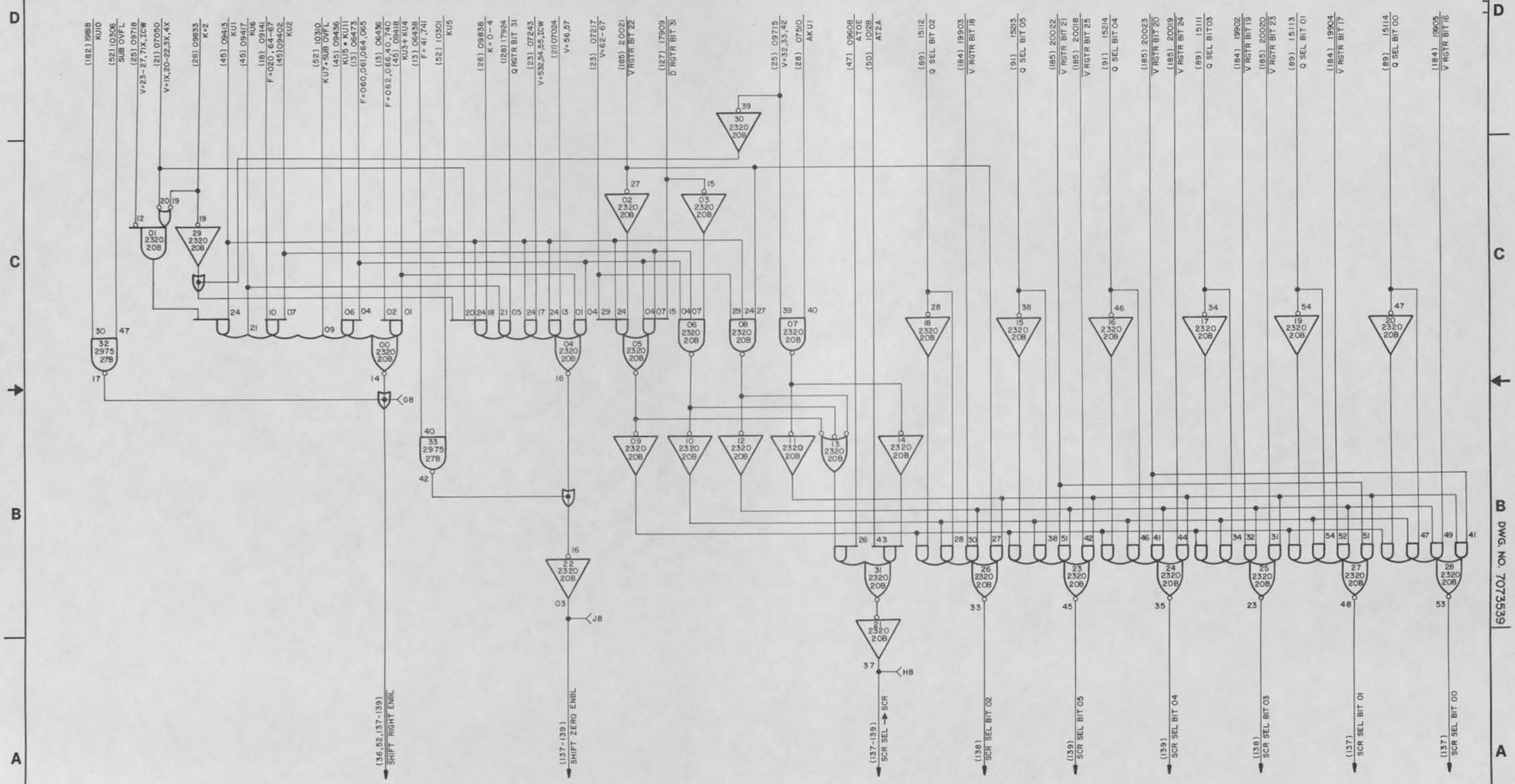

SHIFT ENABLE & SCR SELECT 099

SIZE	CODE IDENT	DWG NO.
D	90536	7073539
SCALE	CLASS A	SHEET 48

DWG. NO. 7073539

CHANGE 2

UD 1-8534C

REVISIONS						
ZONE	LTR	EIR	DESCRIPTION	CHK	DATE	APPROVED
	AW	D05759	SEE EIR		2-7-72	
	CA	D06588	SEE EIR		12-15-72	

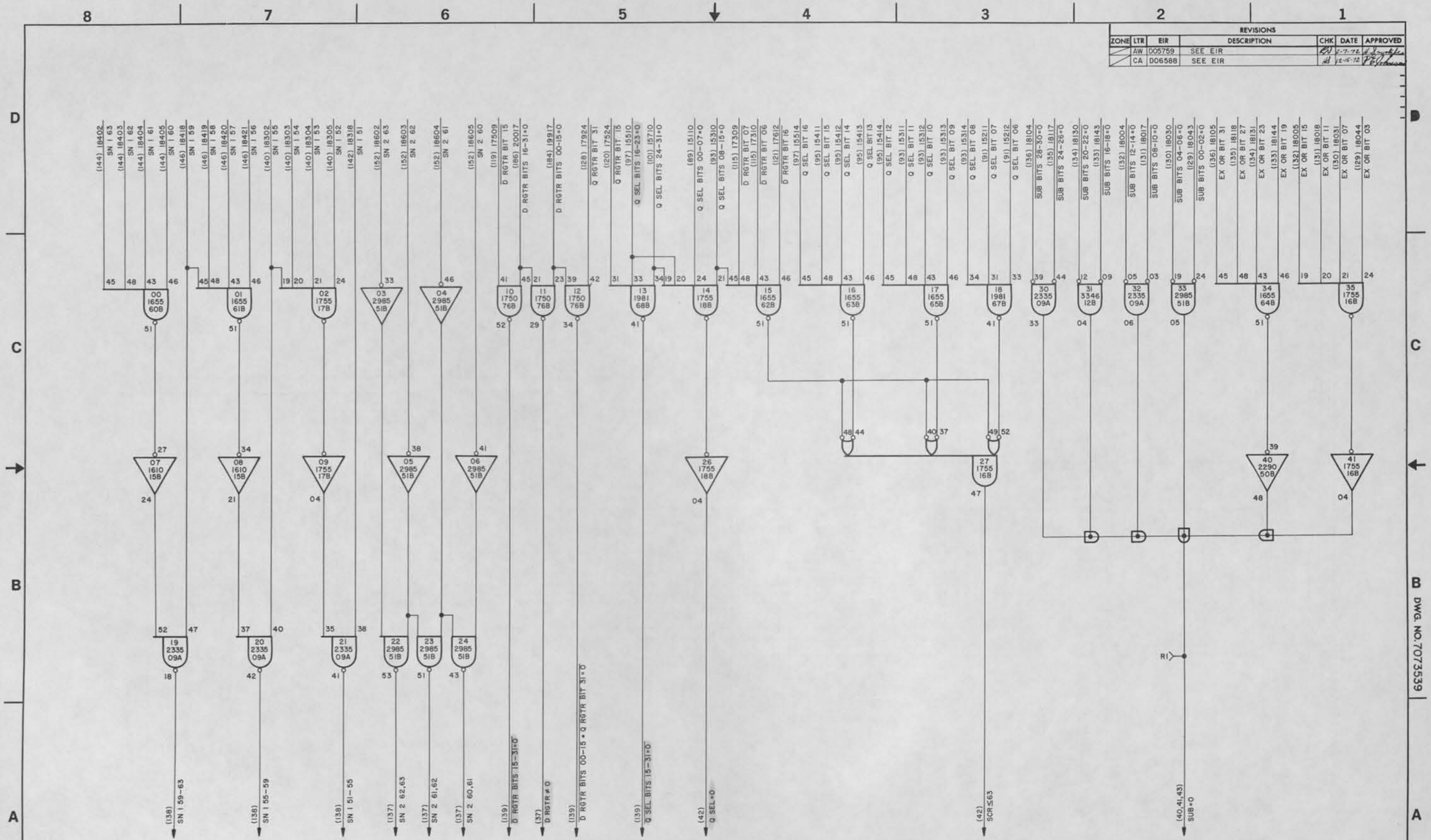

DWG. NO. 7073539

NORMALIZE 100

CHANGE 2

SIZE	CODE IDENT	DWG NO.
D	90536	7073539
SCALE	CLASS A	SHEET 49

UD 1-8534C

REVISIONS						
ZONE	LTR	EIR	DESCRIPTION	CHK	DATE	APPROVED
	BB	D05858	SEE EIR		7-11-72	
	CA	D06588	SEE EIR		12-15-72	
	CG	D10463	SEE EIR		12-8-73	
	CK	D09611	SEE EIR		12-21-73	

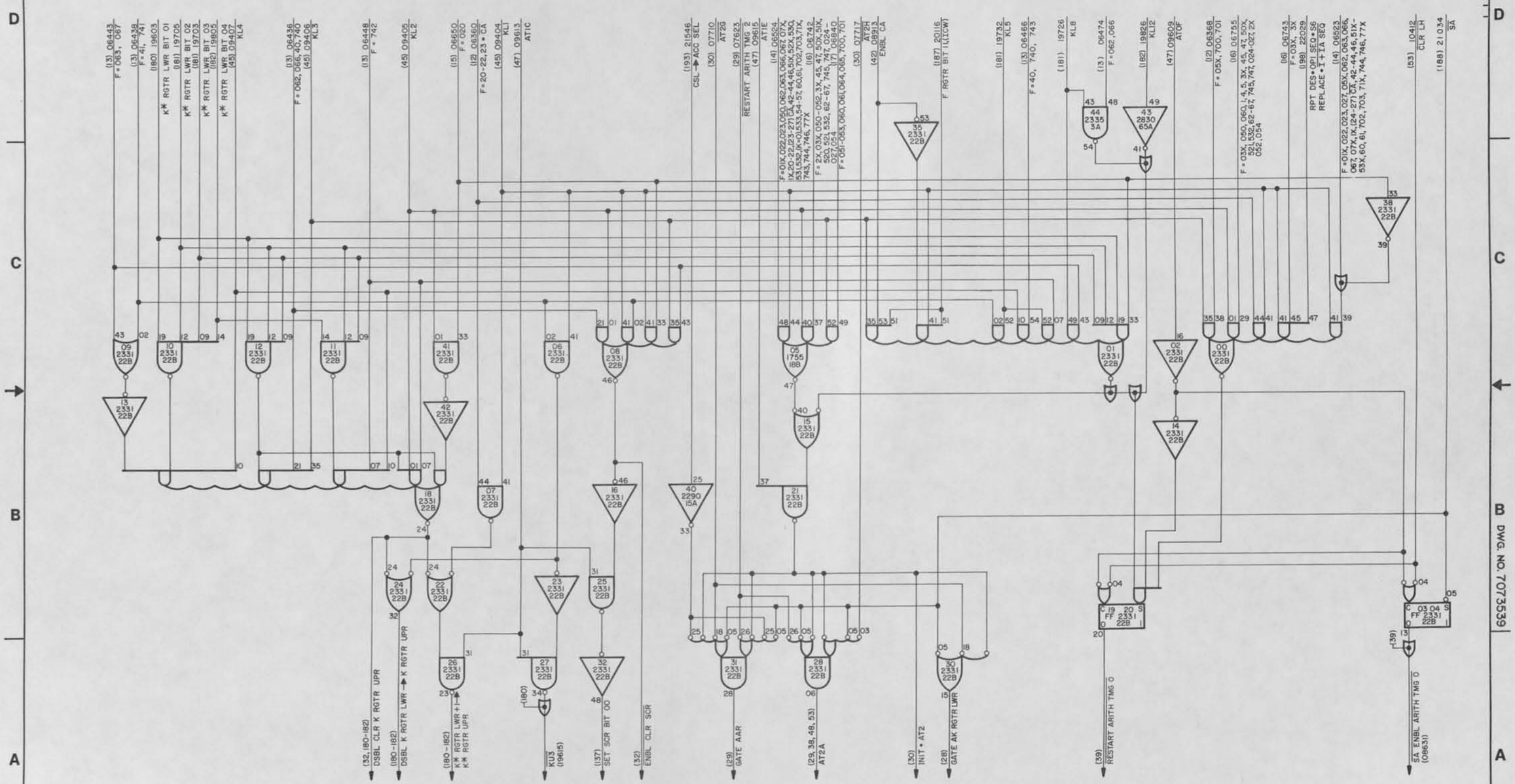

ARITHMETIC CLOCK CONTROL | 101

SIZE	CODE IDENT	DWG NO.
D	90536	7073539
SCALE	CLASS A	SHEET 50

CHANGE 2

UD 1-8534C

REVISIONS						
ZONE	LTR	EIR	DESCRIPTION	CHK	DATE	APPROVED
	Y	D03399	SEE EIR	KPB	4-30-71	Stalowicz
	AK	D05145	SEE EIR	KJ	2-1-72	[illegible]
	AN	D05753	SEE EIR	KJ	2-2-72	[illegible]
	BB	D05858	SEE EIR	KJ	2-10-72	[illegible]
	BF	D06055	SEE EIR	KH	2-18-72	[illegible]
	CA	D06588	SEE EIR	KH	12-15-72	[illegible]
	CD	D06704	SEE EIR	KH	7-19-73	[illegible]

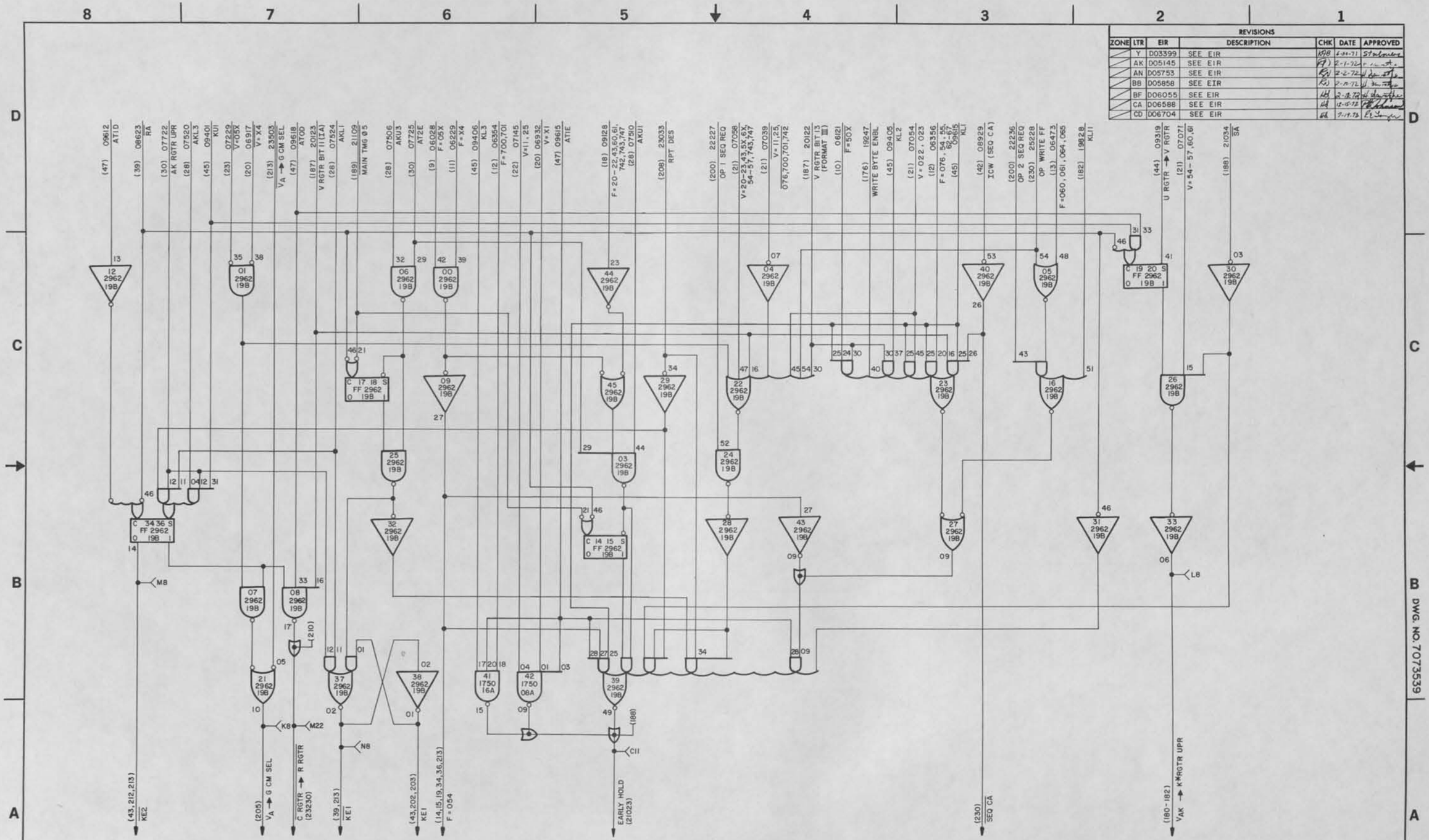

CHANGE 2

EARLY HOLD CONTROL 102

SIZE	CODE IDENT	DWG NO.
D	90536	7073539
SCALE	CLASS A	SHEET 51

DWG. NO. 7073539

UD 1-8534C

REVISIONS						
ZONE	LTR	EIR	DESCRIPTION	CHK	DATE	APPROVED
	BT	D06552	SEE EIR		2-17-72	
	CA	D06588	SEE EIR		12-15-72	

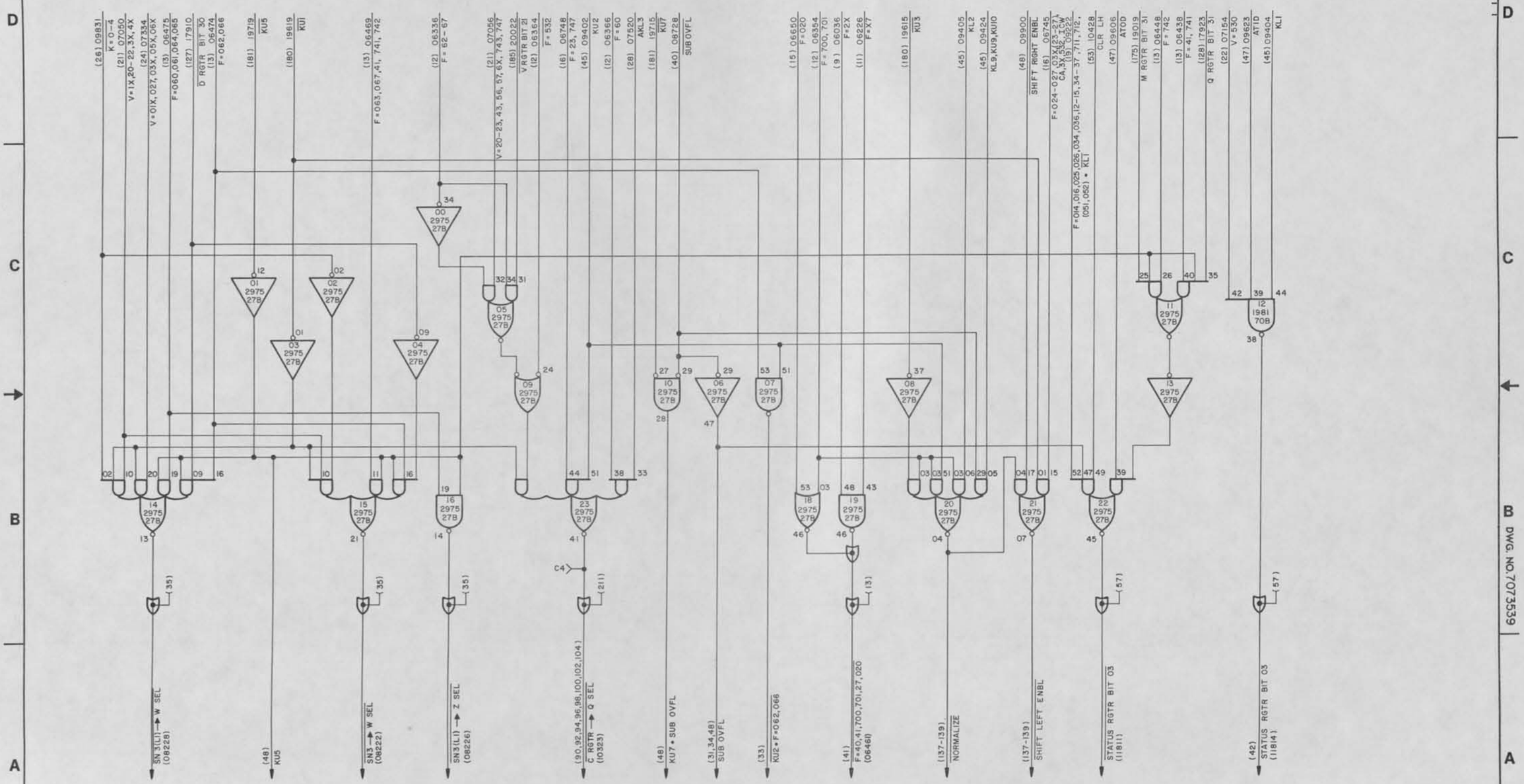

ARITHMETIC COMMANDS I 103

SIZE	CODE IDENT	DWG NO.
D	90536	7073539
SCALE	CLASS A	SHEET 52

DWG. NO. 7073539

CHANGE 2

UD 1-8534C

REVISIONS						
ZONE	LTR	EIR	DESCRIPTION	CHK	DATE	APPROVED
	CA	D06588	SEE EIR		12-15-72	

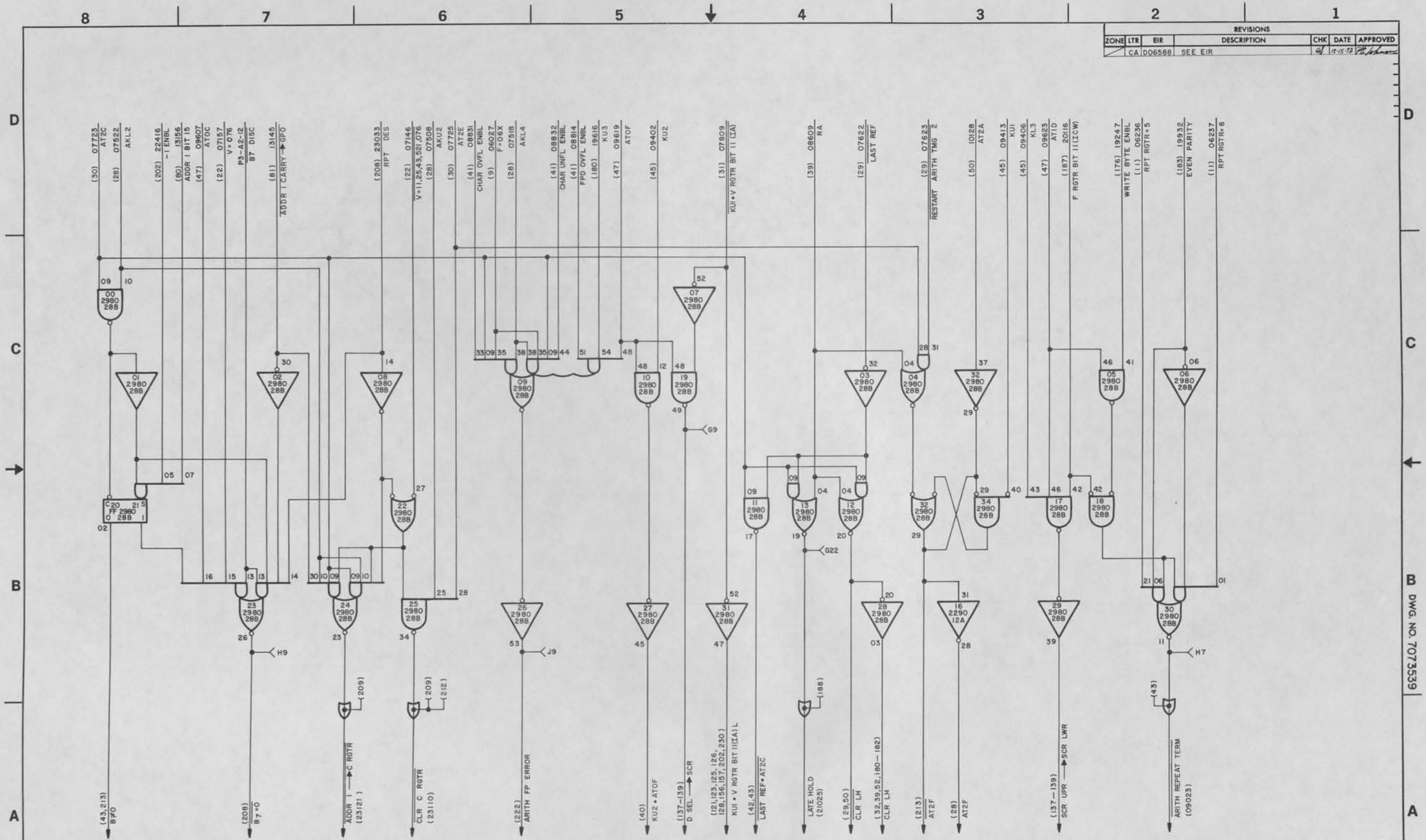

CHANGE 2

DWG. NO. 7073539

ARITHMETIC COMMANDS 2 | 104

SIZE	CODE IDENT	DWG NO.
D	90536	7073539
SCALE	CLASS A	SHEET 53

UD 1-8534C

REVISIONS						
ZONE	LTR	EIR	DESCRIPTION	CHK	DATE	APPROVED
	CA	D06588	SEE EIR		12-15-72	
	CG	D10463	SEE EIR		12-9-73	

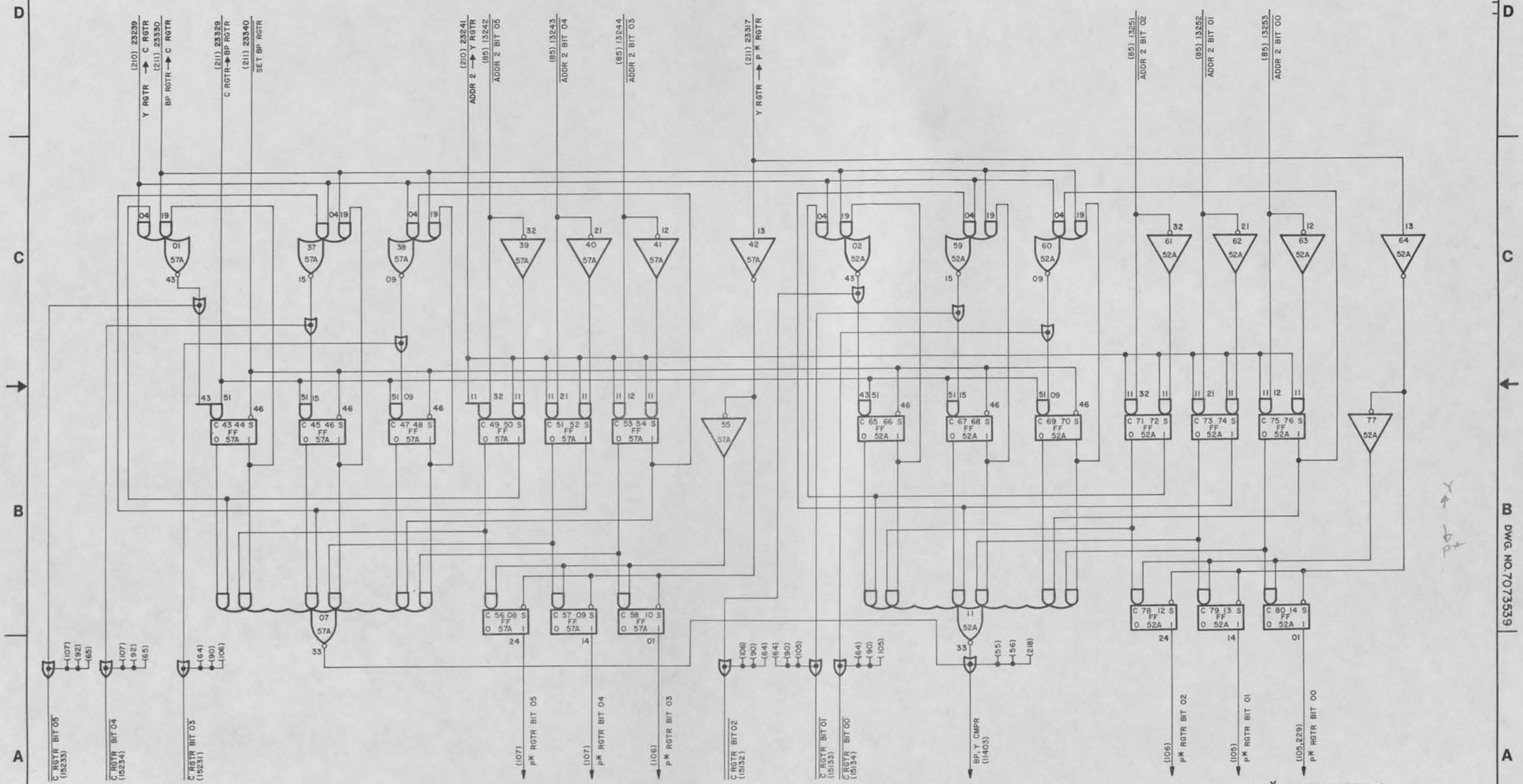

NOTE:
1. CARD TYPE – 2825

CHANGE 2

Y, P*, BP REGISTER &
BP, Y COMPARE, BITS 00–05

115

SIZE	CODE IDENT	DWG NO.
D	90536	7073539
SCALE	CLASS A	SHEET 54

DWG. NO. 7073539

UD 1-8534C

REVISIONS						
ZONE	LTR	EIR	DESCRIPTION	CHK	DATE	APPROVED
	CA	D06588	SEE EIR		12-15-72	

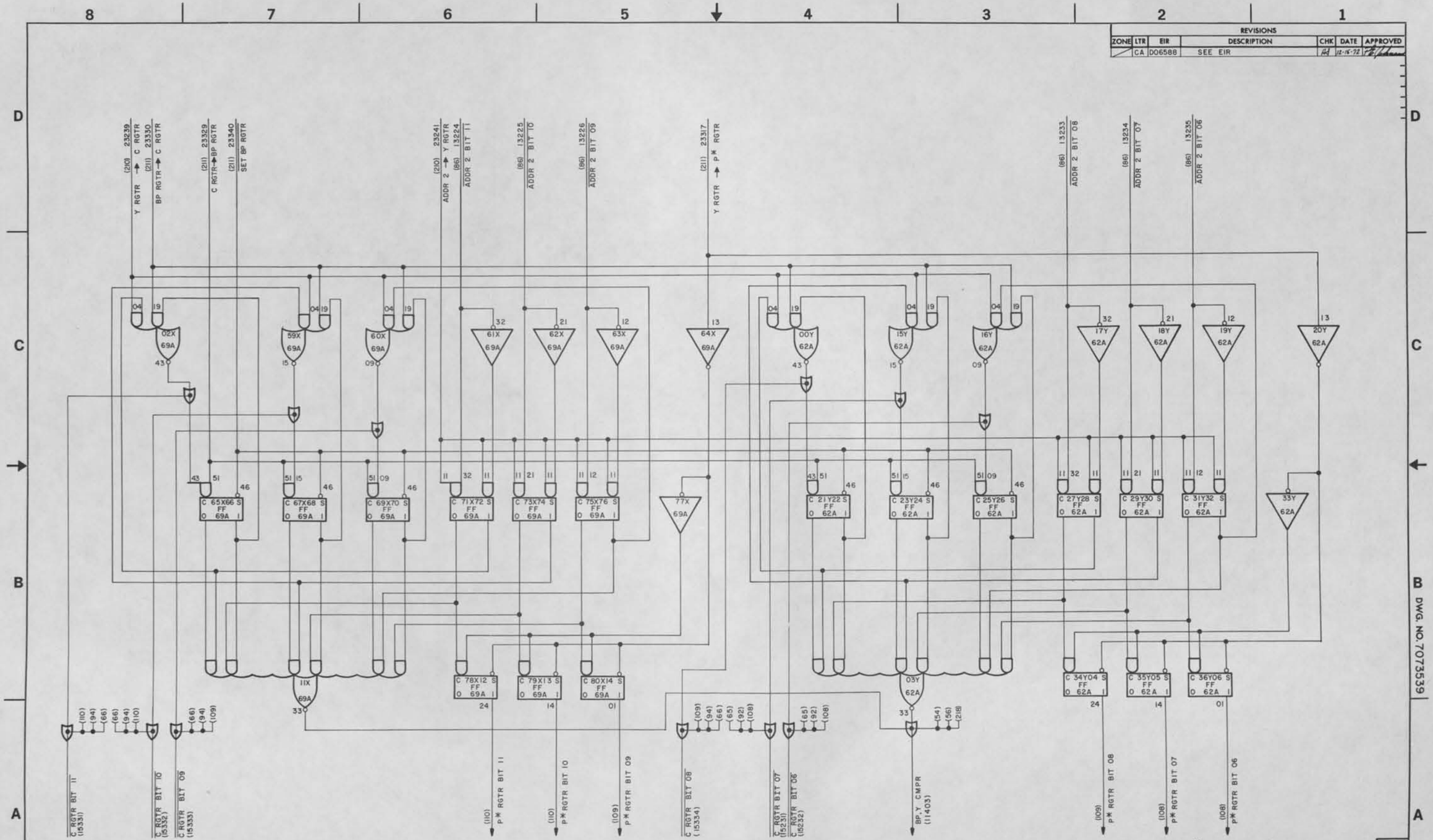

NOTE:
1. CARD TYPE 2825

CHANGE 2

Y, P*, BP REGISTER & BP, Y COMPARE, BITS 06-11

114X
115Y

SIZE	CODE IDENT	DWG NO.
D	90536	7073539
SCALE	CLASS A	SHEET 55

DWG. NO. 7073539

UD 1-8534C

REVISIONS						
ZONE	LTR	EIR	DESCRIPTION	CHK	DATE	APPROVED
	CA	006588	SEE EIR		12-15-72	

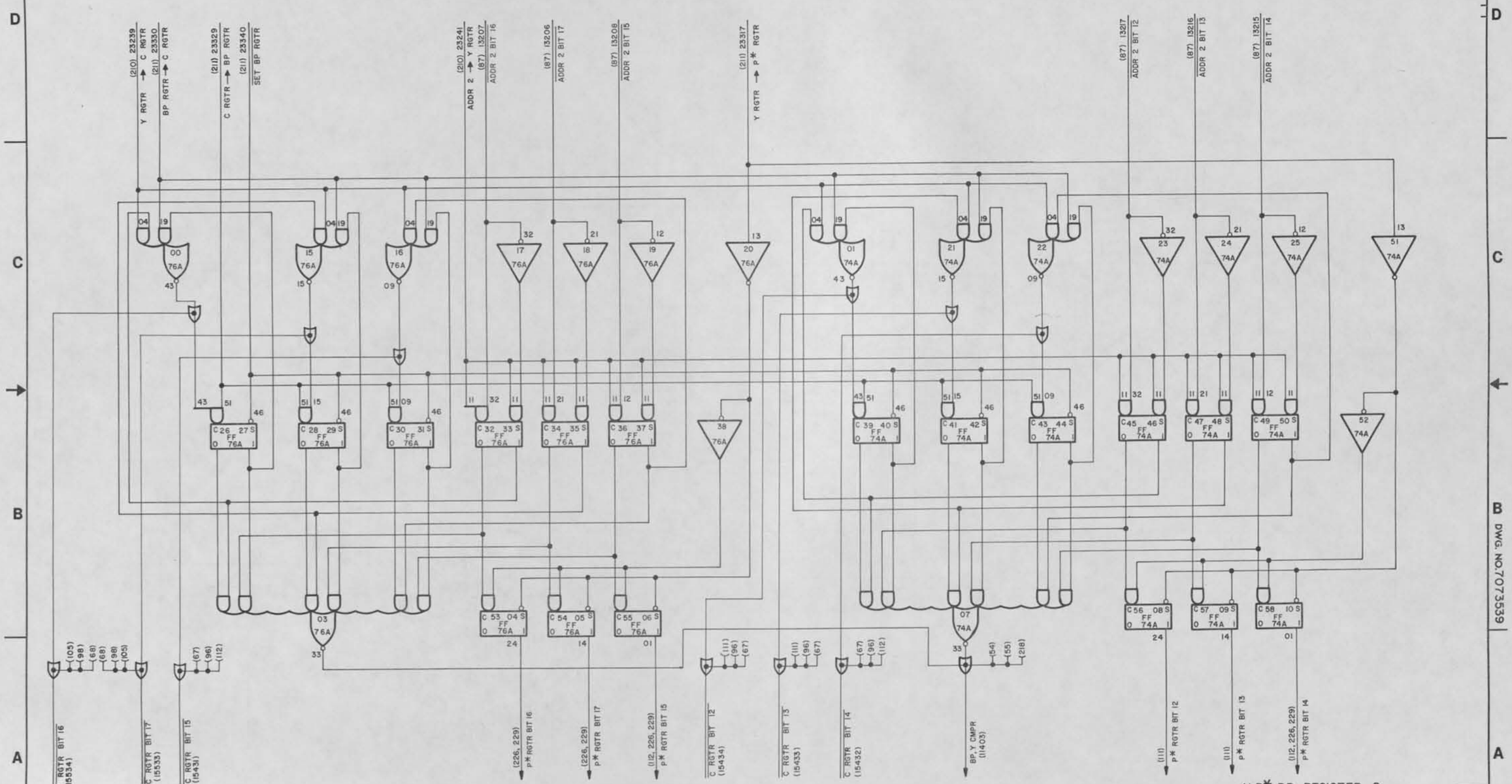

NOTE:
1. CARD TYPE-2825

Y, P*, BP REGISTER &
BP, Y COMPARE, BITS 12-17

114

CHANGE 2

SIZE	CODE IDENT	DWG NO.
D	90536	7073539
SCALE	CLASS A	SHEET 56

DWG. NO. 7073539

UD 1-8534C

REVISIONS						
ZONE	LTR	EIR	DESCRIPTION	CHK	DATE	APPROVED
	CF	D09563	SEE EIR			

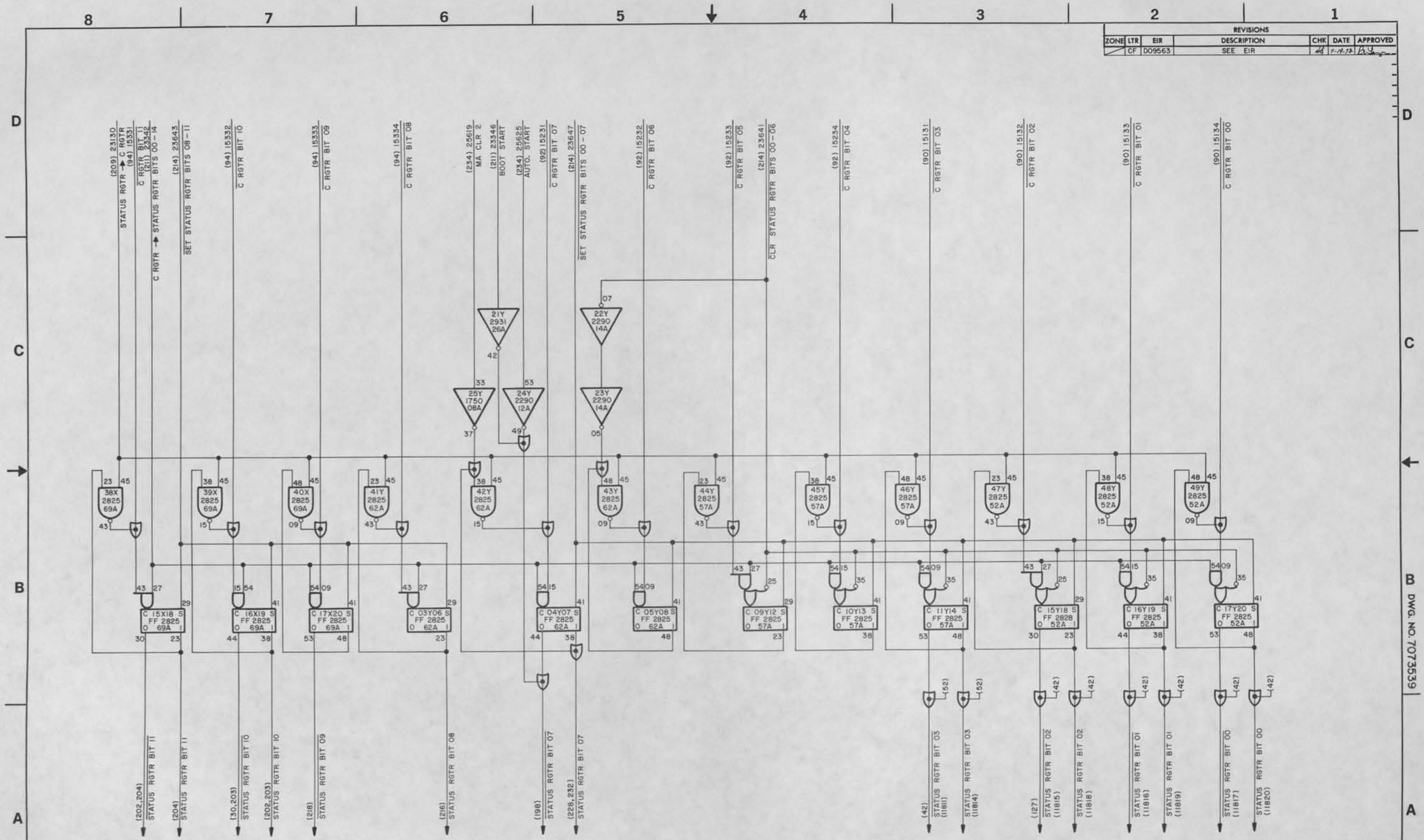

STATUS REGISTER BITS 00-11 | 117X 118Y

CHANGE 2

SIZE	CODE IDENT	DWG NO.
D	90536	7073539
SCALE	CLASS A	SHEET 57

DWG. NO. 7073539

UD 1-8534C

REVISIONS						
ZONE	LTR	EIR	DESCRIPTION	CHK	DATE	APPROVED
	Y	D03399	SEE EIR	RPB	6-30-71	[illegible]
	BG	D06080	SEE EIR	RJ	2-18-72	[illegible]
	BJ	D06509	SEE EIR	RJ	2-18-72	[illegible]
	CA	D06588	SEE EIR	RB	12-18-72	[illegible]

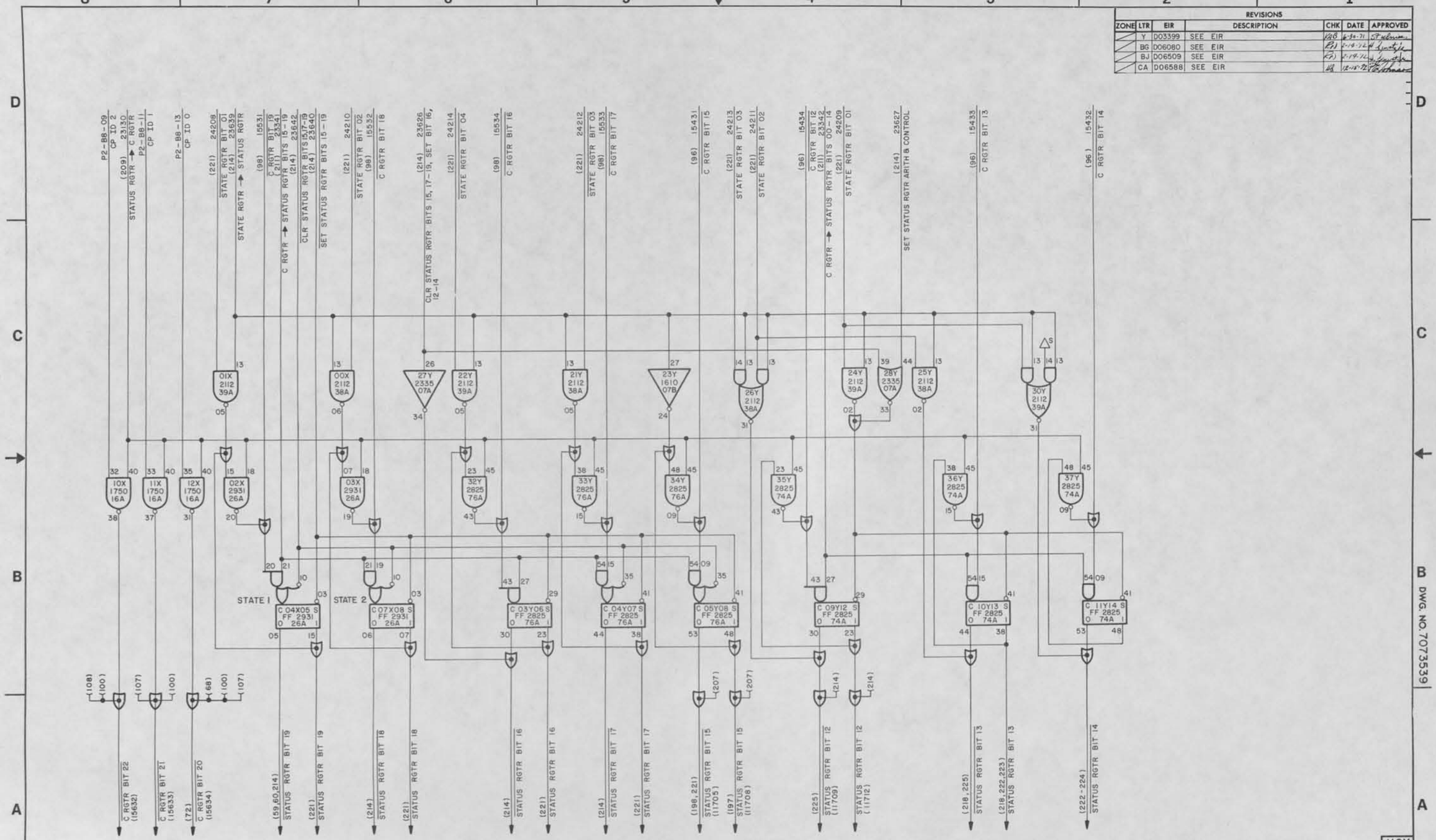

STATUS REGISTER BITS 12 – 19

116X
117Y

CHANGE 2

SIZE	CODE IDENT	DWG NO.
D	90536	7073539
SCALE	CLASS A	SHEET 58

DWG. NO. 7073539

UD 1-8534C

REVISIONS						
ZONE	LTR	EIR	DESCRIPTION	CHK	DATE	APPROVED

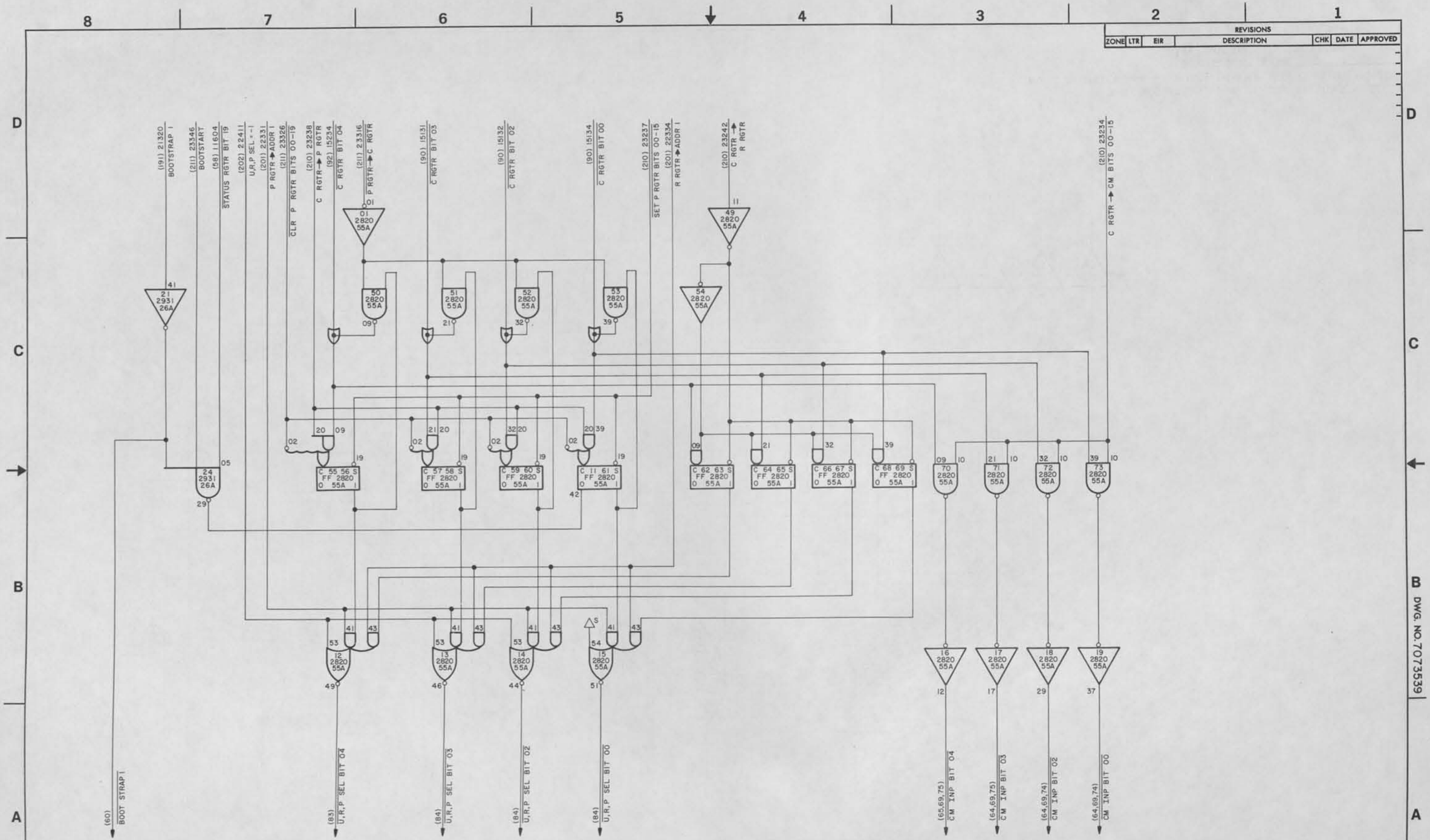

P&R REGISTERS, P&R COMPARISONS,
1/2 C REGISTER → CONTROL MEMORY BITS 00, 02-04

120

SIZE	CODE IDENT	DWG NO.
D	90536	7073539
SCALE	CLASS A	SHEET 59

DWG. NO. 7073539

UD 1-8534C

REVISIONS						
ZONE	LTR	EIR	DESCRIPTION	CHK	DATE	APPROVED

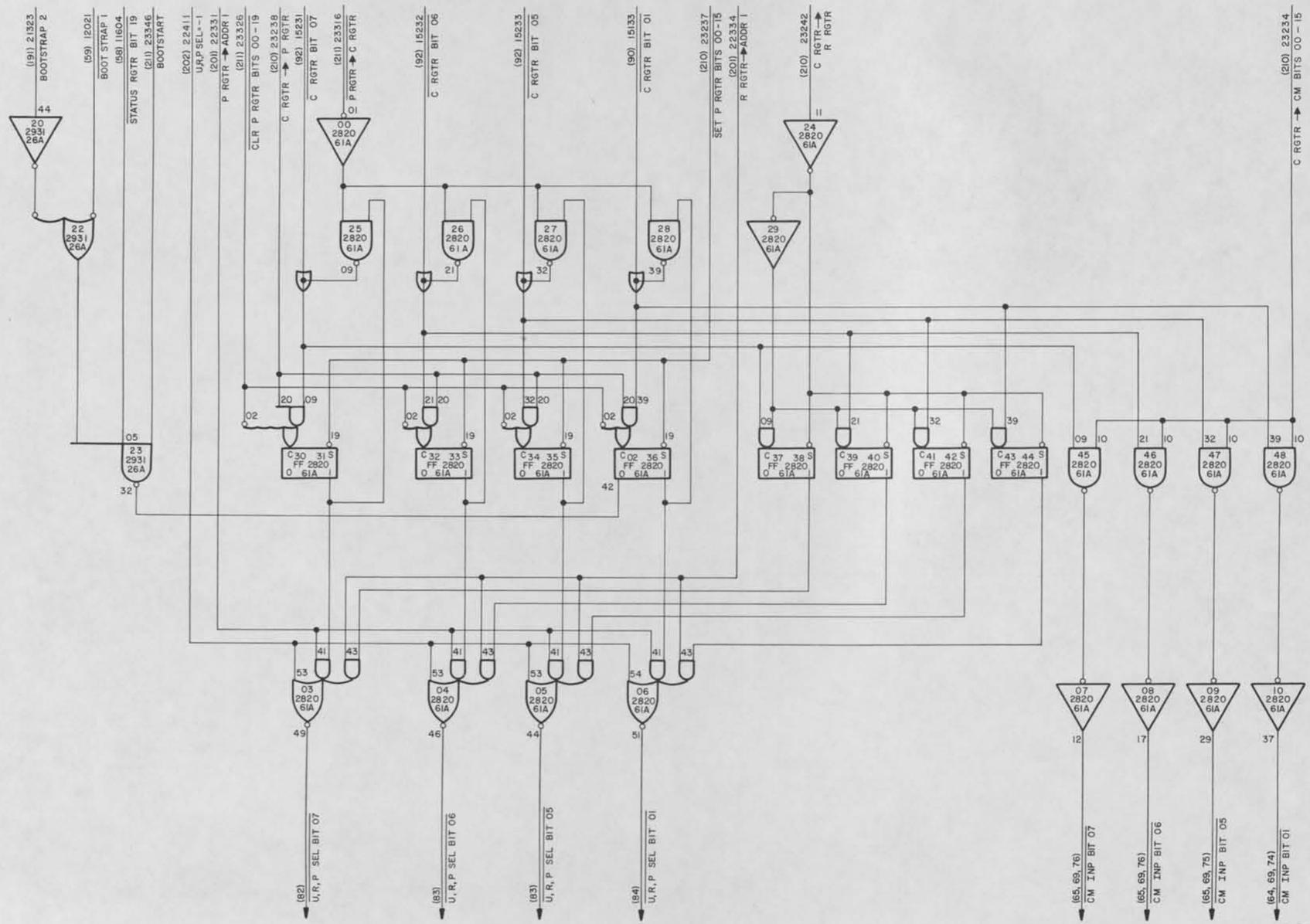

P & R REGISTERS, P & R COMPARISONS,
1/2 C REGISTER → CONTROL MEMORY, BITS 01, 05-07

120

SIZE	CODE IDENT	DWG NO.
D	90536	7073539
SCALE	CLASS A	SHEET 60

DWG. NO. 7073539

UD 1-5534C

REVISIONS						
ZONE	LTR	EIR	DESCRIPTION	CHK	DATE	APPROVED

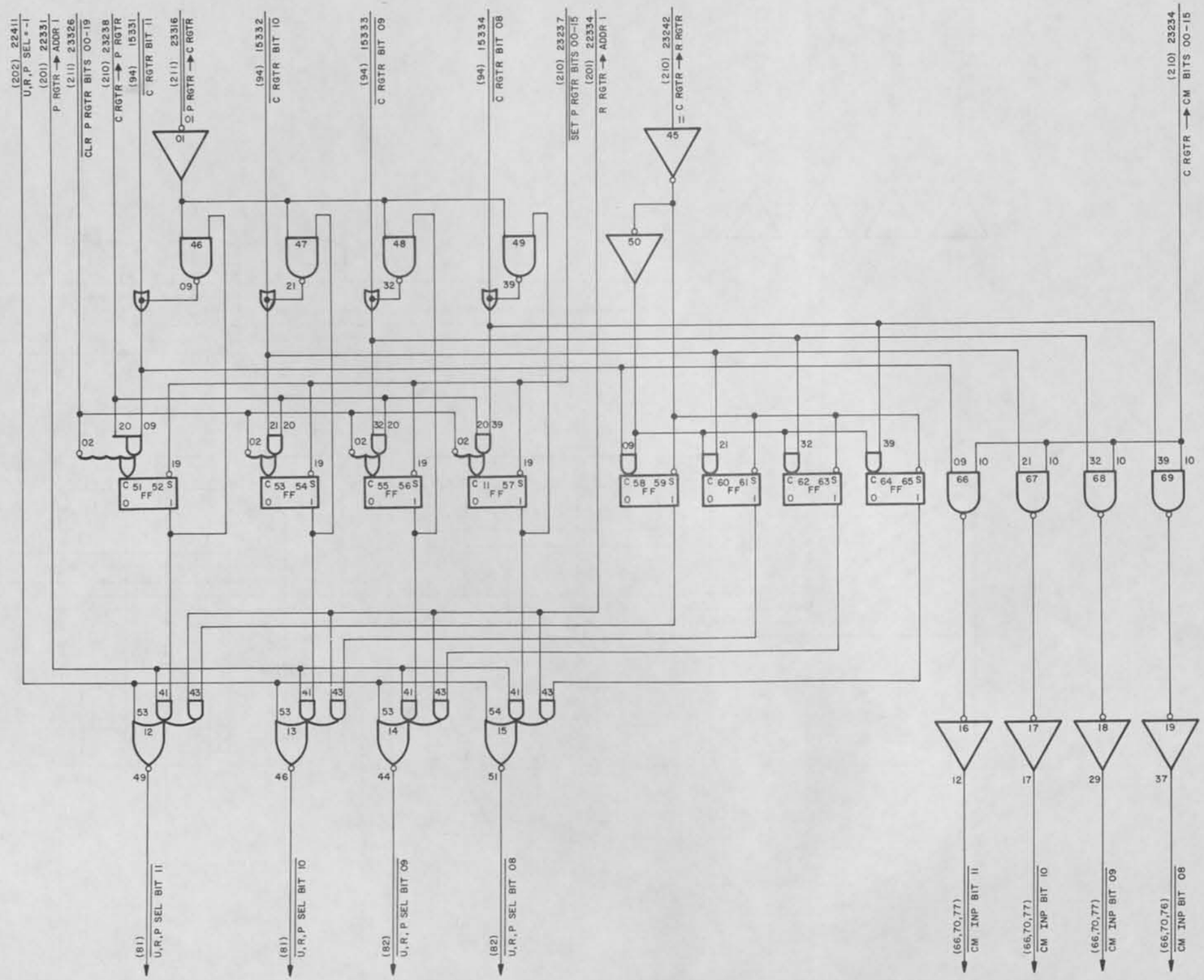

NOTES:
1. CARD TYPE – 2820
2. CARD LOCATION – 66A

P & R REGISTERS, P & R COMPARISONS,
1/2 C REGISTER → CONTROL MEMORY BITS 08-11

119

SIZE	CODE IDENT	DWG NO.
D	90536	7073539
SCALE	CLASS A	SHEET 6

DWG. NO. 7073539

UD 1-8534C

REVISIONS						
ZONE	LTR	EIR	DESCRIPTION	CHK	DATE	APPROVED

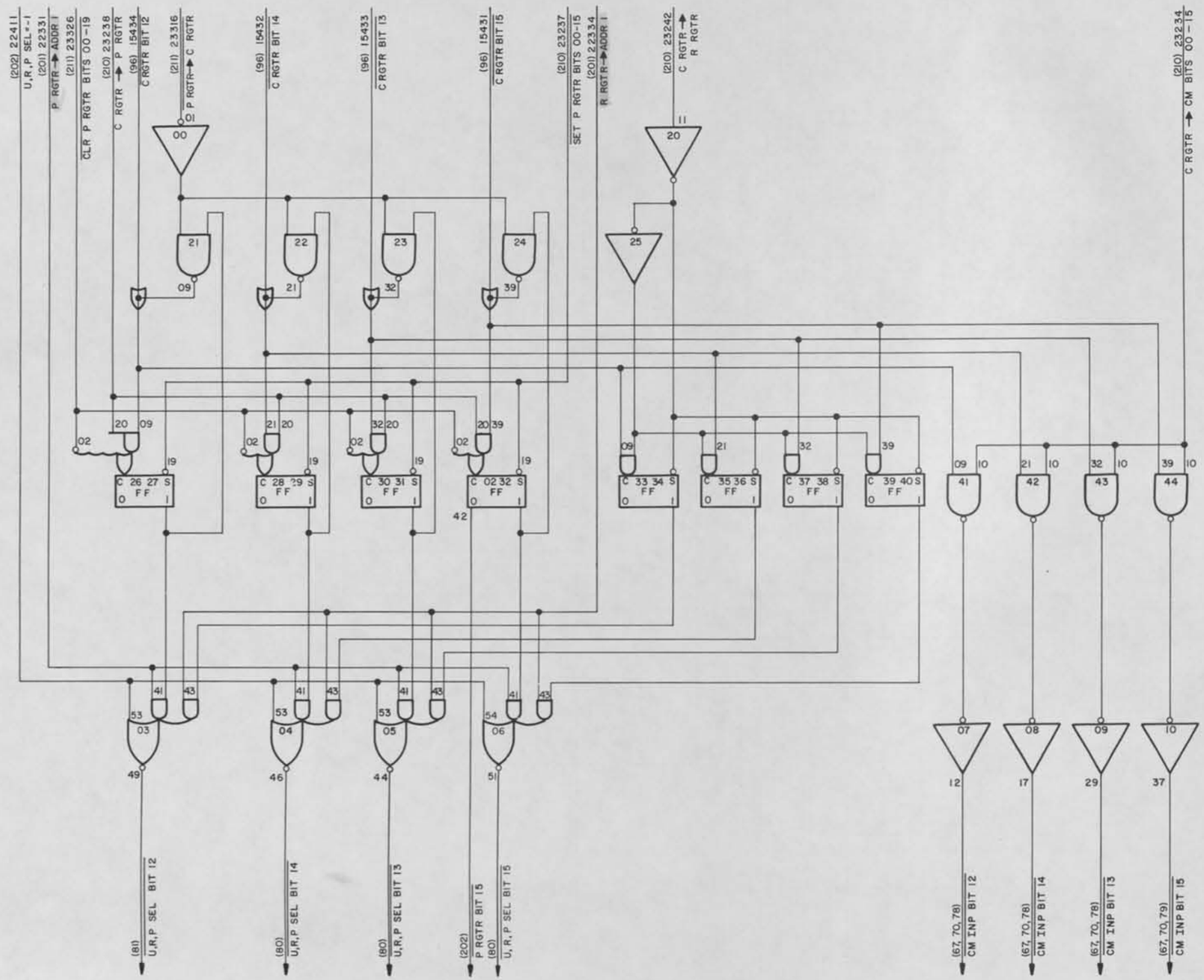

NOTES:

1. CARD TYPE - 2820
2. CARD LOCATION - 71A

P & R REGISTERS, P & R COMPARISONS,
1/2 C REGISTER → CONTROL MEMORY BITS 12 - 15

119

SIZE	CODE IDENT	DWG NO.
D	90536	7073539
SCALE	CLASS A	SHEET 62

DWG. NO. 7073539

UD 1-5534C

REVISIONS						
ZONE	LTR	EIR	DESCRIPTION	CHK	DATE	APPROVED

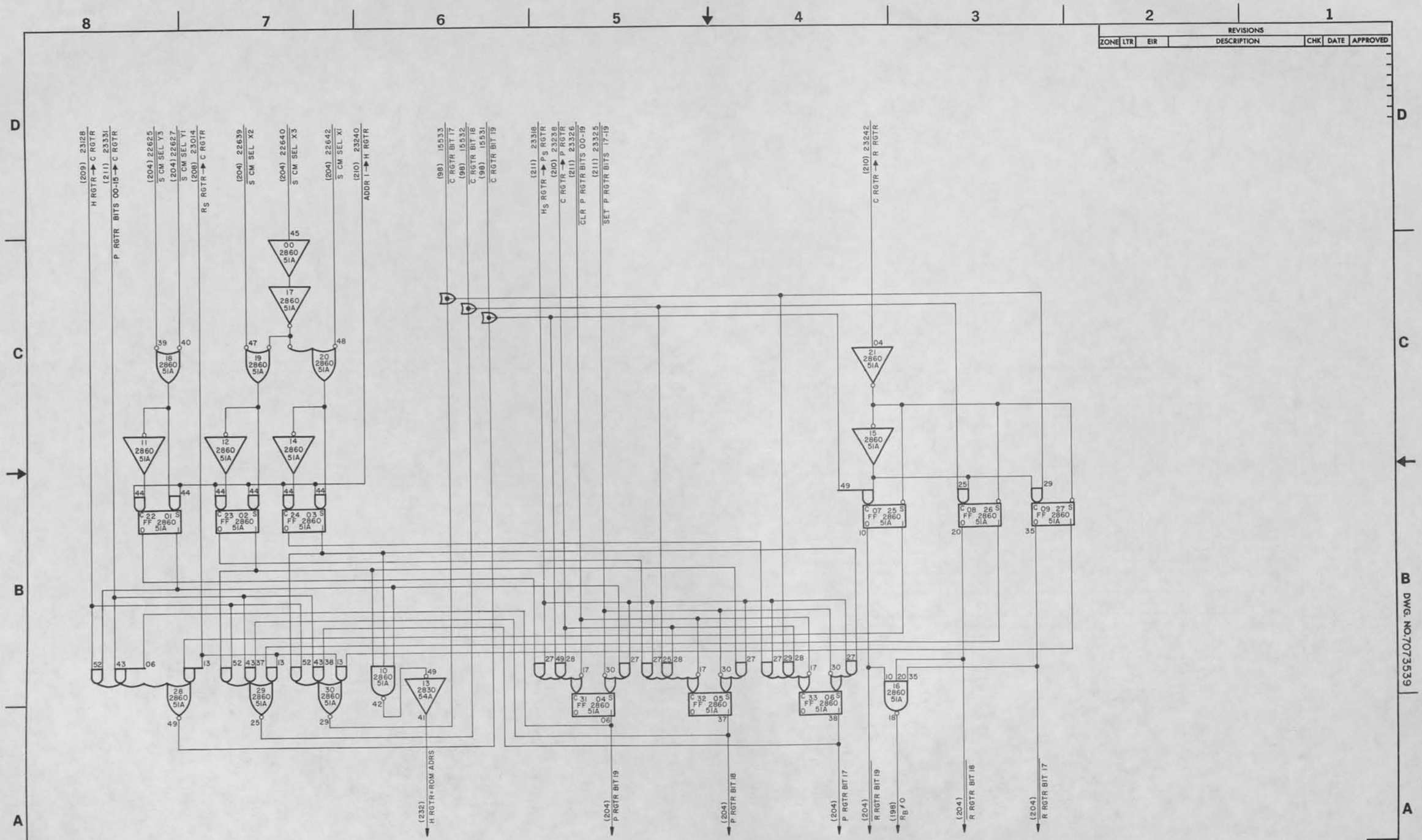

P, R & H REGISTER, BITS 17-19 | 121

SIZE	CODE IDENT	DWG NO.
D	90536	7073539
SCALE	CLASS A	SHEET 63

DWG. NO. 7073539

UD 1-8534C

REVISIONS						
ZONE	LTR	EIR	DESCRIPTION	CHK	DATE	APPROVED
	AD	D05048	SEE EIR	BH	1-26-72	[illegible]
	CA	D06588	SEE EIR	HF	11-15-72	[illegible]

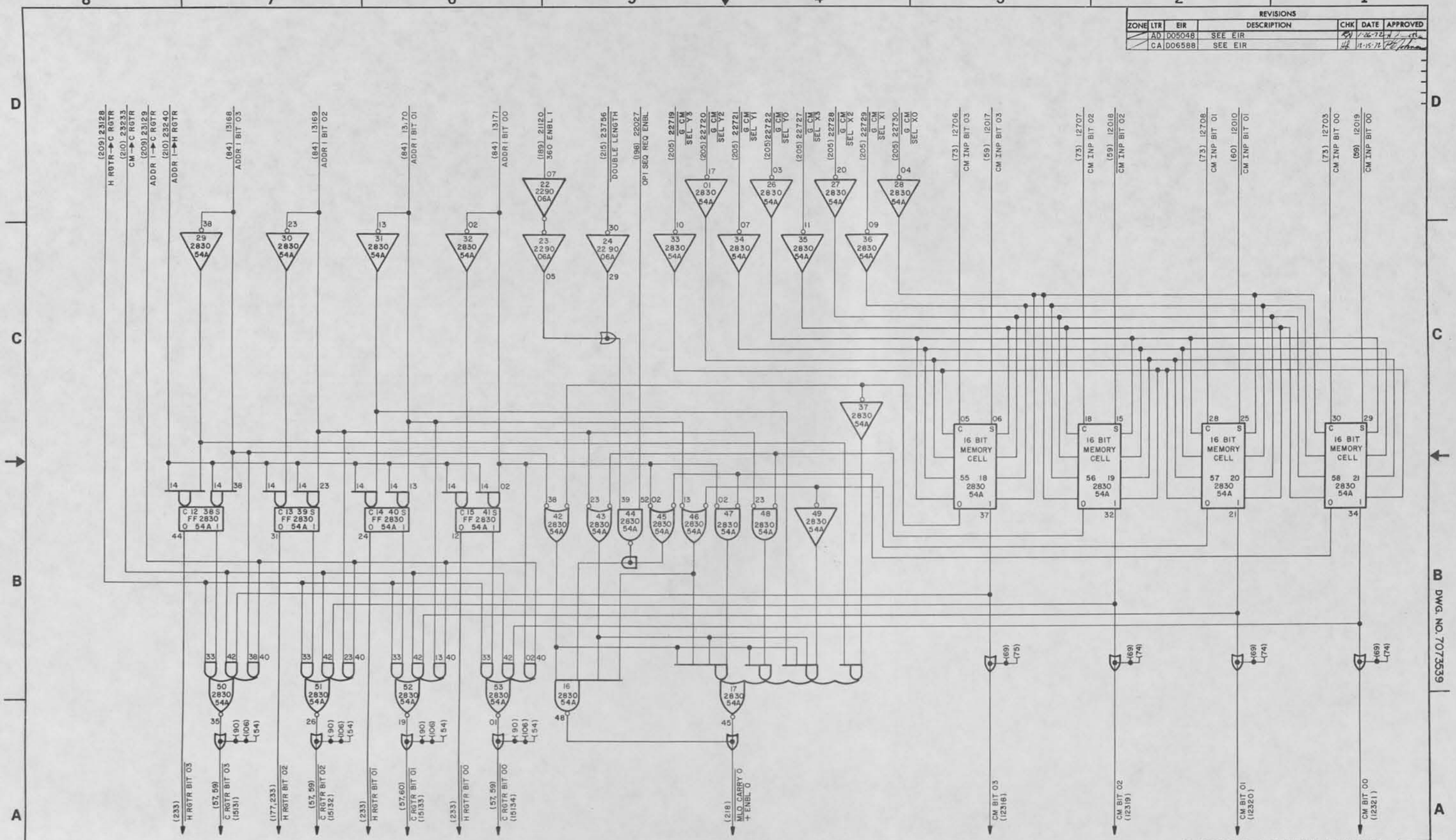

H REGISTER, G CONTROL MEMORY, BITS 00-03, MLO CHECK

123

SIZE	CODE IDENT	DWG NO.
D	90536	7073539
SCALE	CLASS A	SHEET 64

DWG. NO. 7073539

CHANGE 2

UD 1-8534C

REVISIONS						
ZONE	LTR	EIR	DESCRIPTION	CHK	DATE	APPROVED
	CA	D06588	SEE EIR		12-15-72	

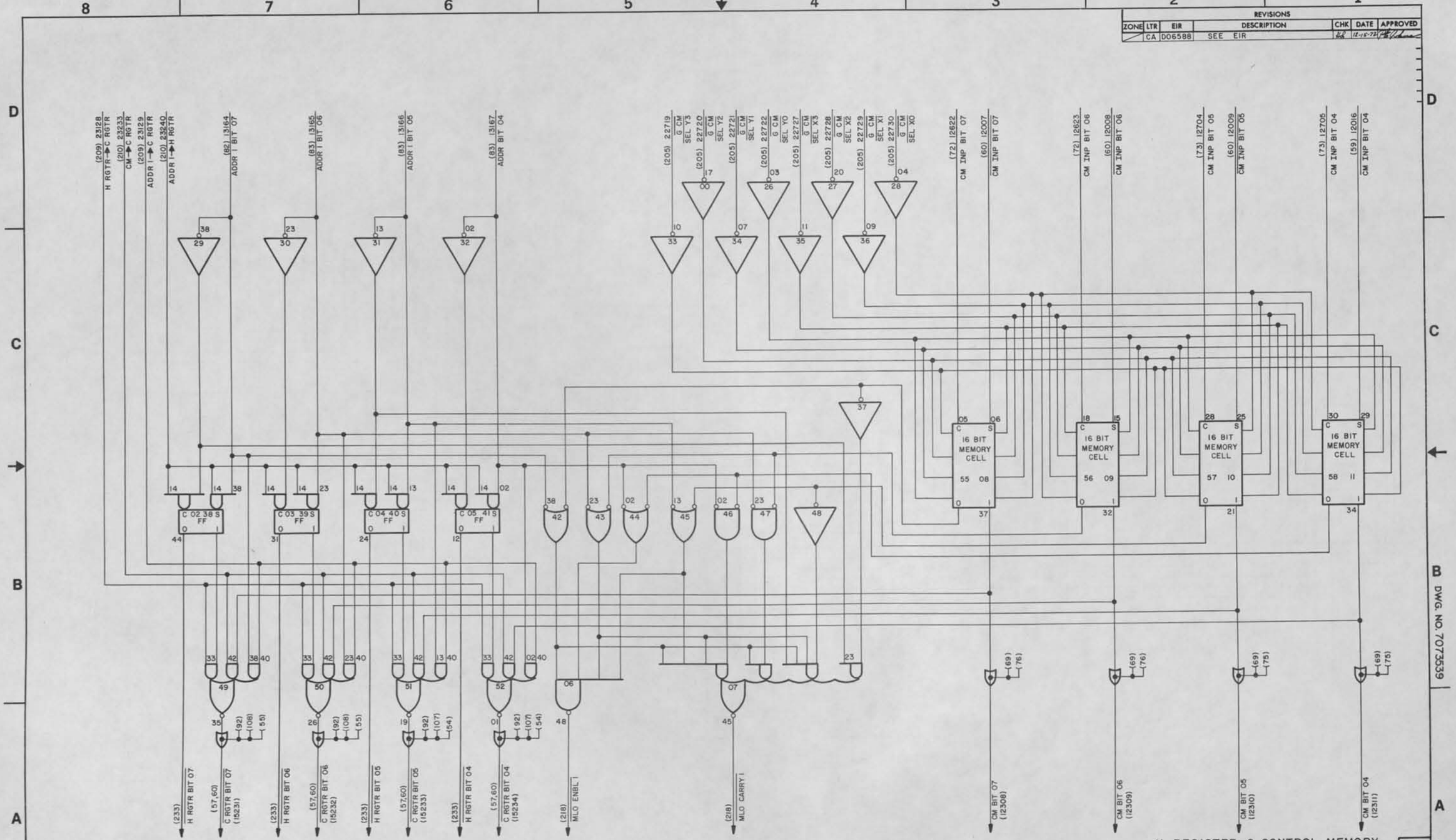

NOTES:
1. CARD TYPE - 2830
2. CARD LOCATION - 60A

H REGISTER, G CONTROL MEMORY
BITS 04-07, MLO CHECK

123

SIZE	CODE IDENT	DWG NO.
D	90536	7073539
SCALE	CLASS A	SHEET 65

DWG. NO. 7073539

CHANGE 2

UD 1-3534C

REVISIONS						
ZONE	LTR	EIR	DESCRIPTION	CHK	DATE	APPROVED
	CA	D06588	SEE EIR	KB	12-5-72	

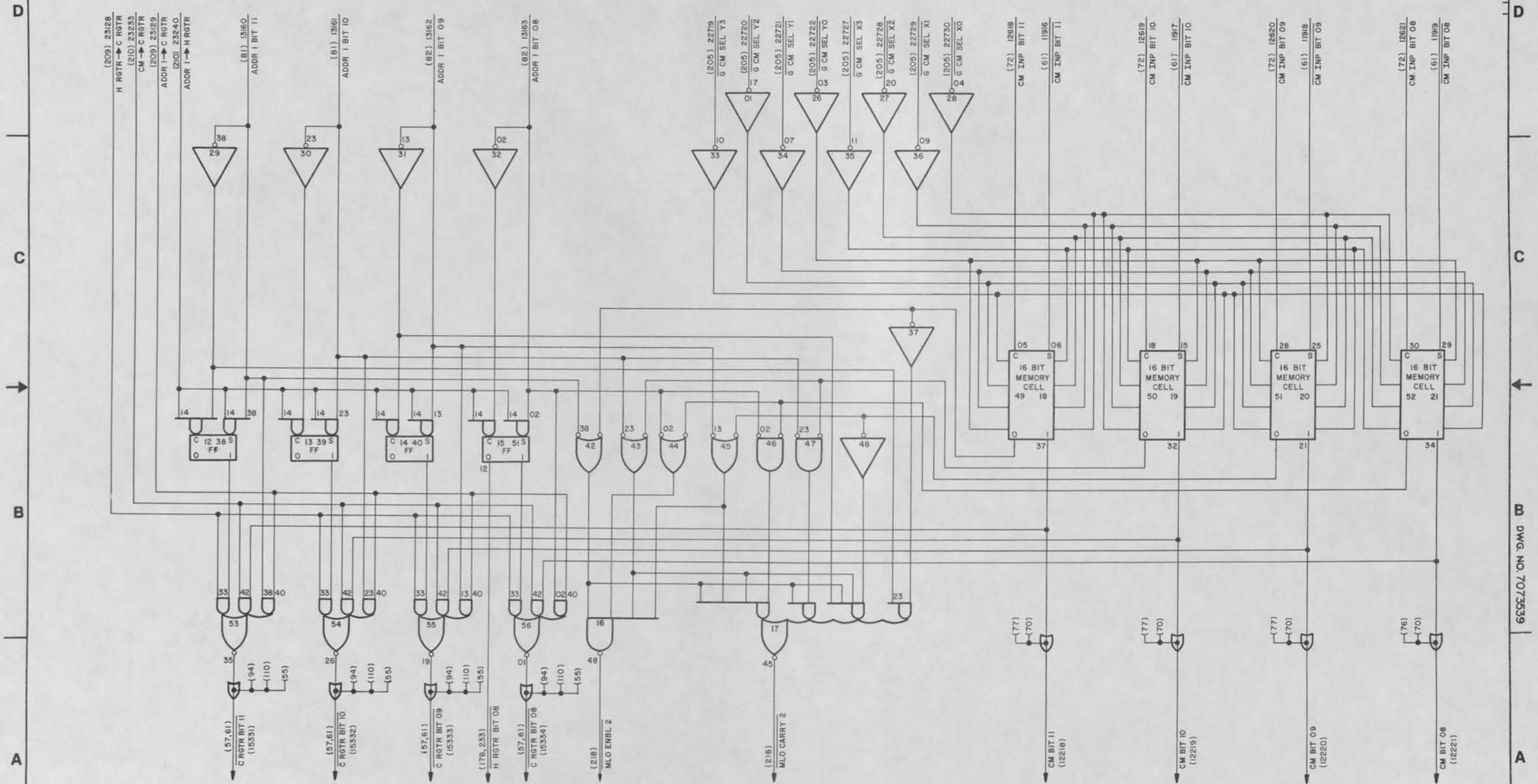

NOTES:
1. CARD TYPE-2830
2. CARD LOCATION-65A

H REGISTER, G CONTROL MEMORY
BITS 08-11, MLO CHECK

122

CHANGE 2

SIZE	CODE IDENT	DWG NO.
D	90536	7073539
SCALE	CLASS A	SHEET 66

DWG. NO. 7073539

UD 1-5534C

REVISIONS						
ZONE	LTR	EIR	DESCRIPTION	CHK	DATE	APPROVED
	AF	D04719	SEE EIR		1-22-72	
	CA	D06588	SEE EIR		12-18-72	

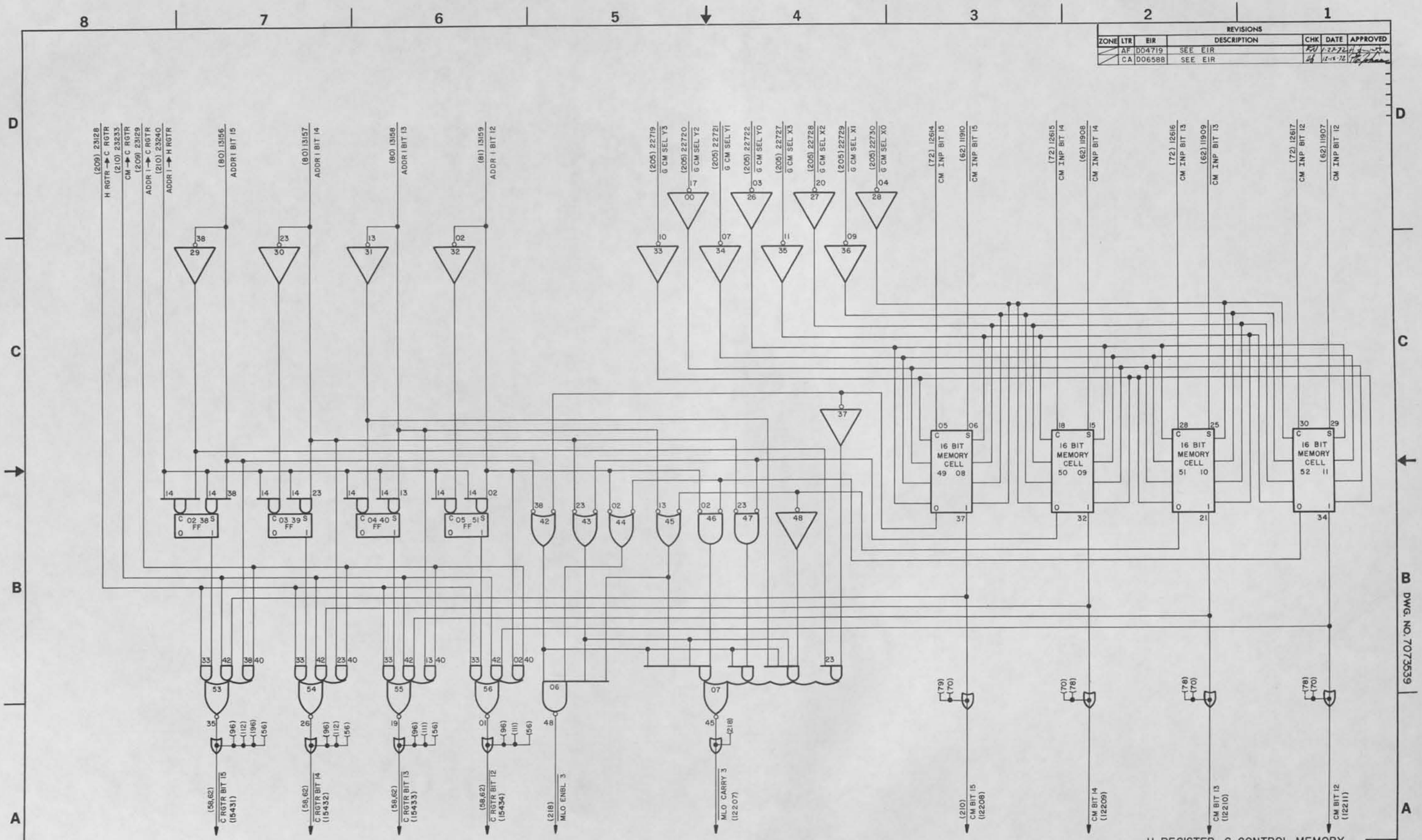

NOTES:
1. CARD TYPE-2830
2. CARD LOCATION-70A

H REGISTER, G CONTROL MEMORY
BITS 12-15, MLO CHECK

122

SIZE	CODE IDENT	DWG NO.
D	90536	7073539
SCALE	CLASS A	SHEET 67

DWG. NO. 7073539

CHANGE 2

UD 1-8534C

REVISIONS						
ZONE	LTR	EIR	DESCRIPTION	CHK	DATE	APPROVED
	CA	D06588	SEE EIR		12-15-72	

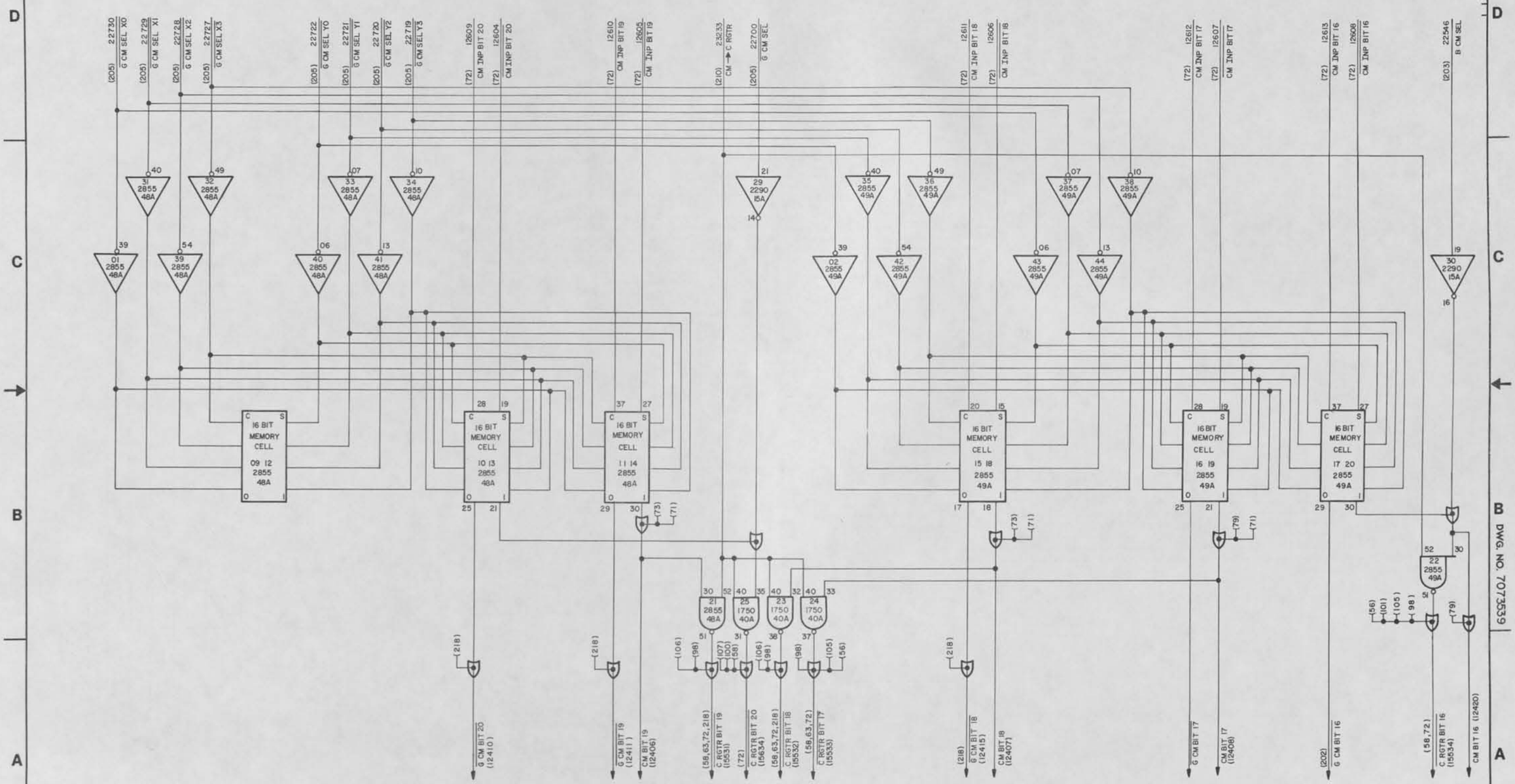

G CONTROL MEMORY BITS 16-21

124

SIZE	CODE IDENT	DWG NO.
D	90536	7073539
SCALE	CLASS A	SHEET 68

CHANGE 2

UD 1-8534C

REVISIONS						
ZONE	LTR	EIR	DESCRIPTION	CHK	DATE	APPROVED

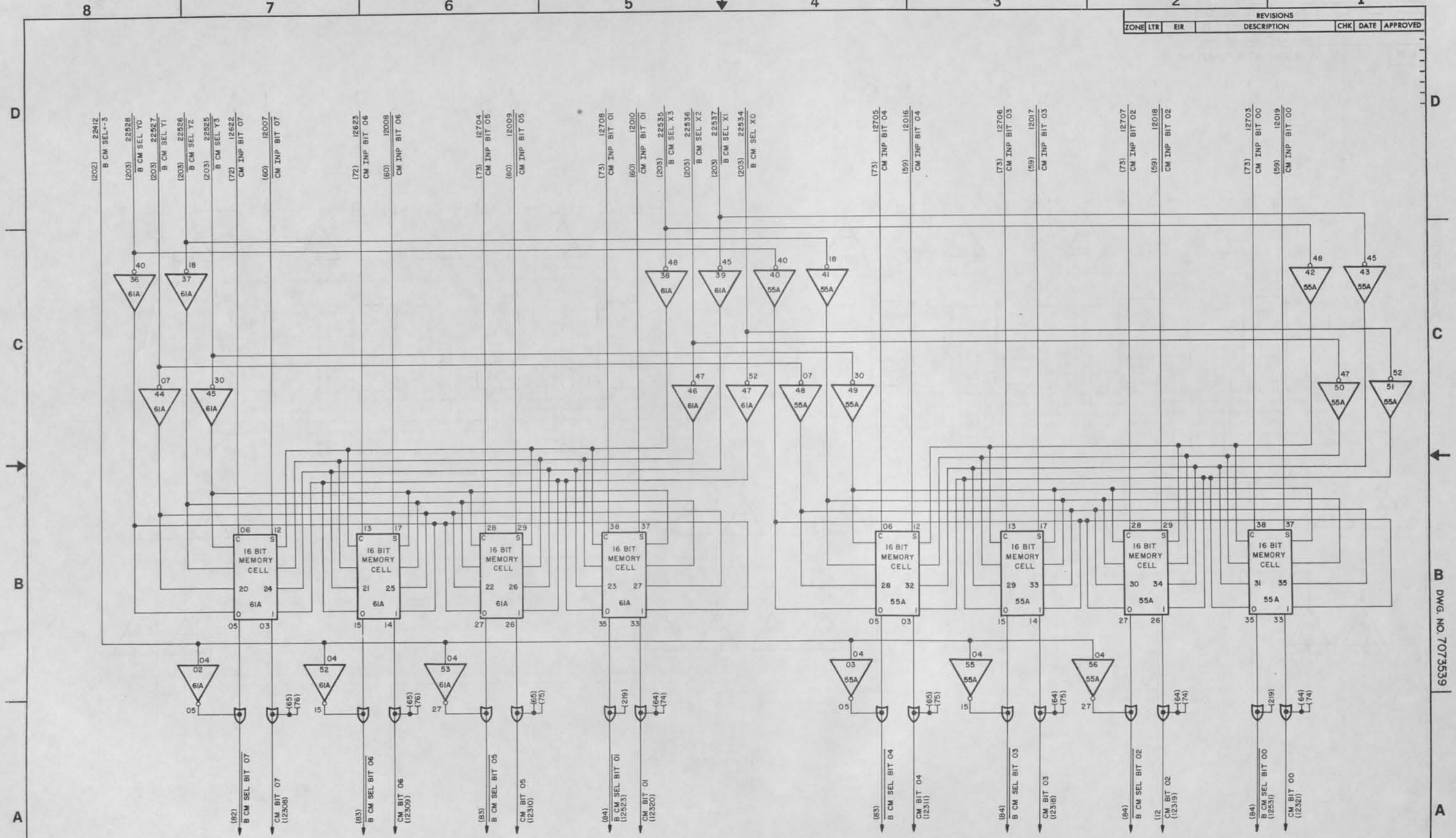

NOTE:
1. CARD TYPE-2820

B CONTROL MEMORY, BITS 00-07 | 125

SIZE	CODE IDENT	DWG NO.
D	90536	7073539
SCALE	CLASS A	SHEET 69

DWG. NO. 7073539

UD 1-8534C

REVISIONS						
ZONE	LTR	EIR	DESCRIPTION	CHK	DATE	APPROVED
	AF	D04719	SEE EIR		1-27-72	

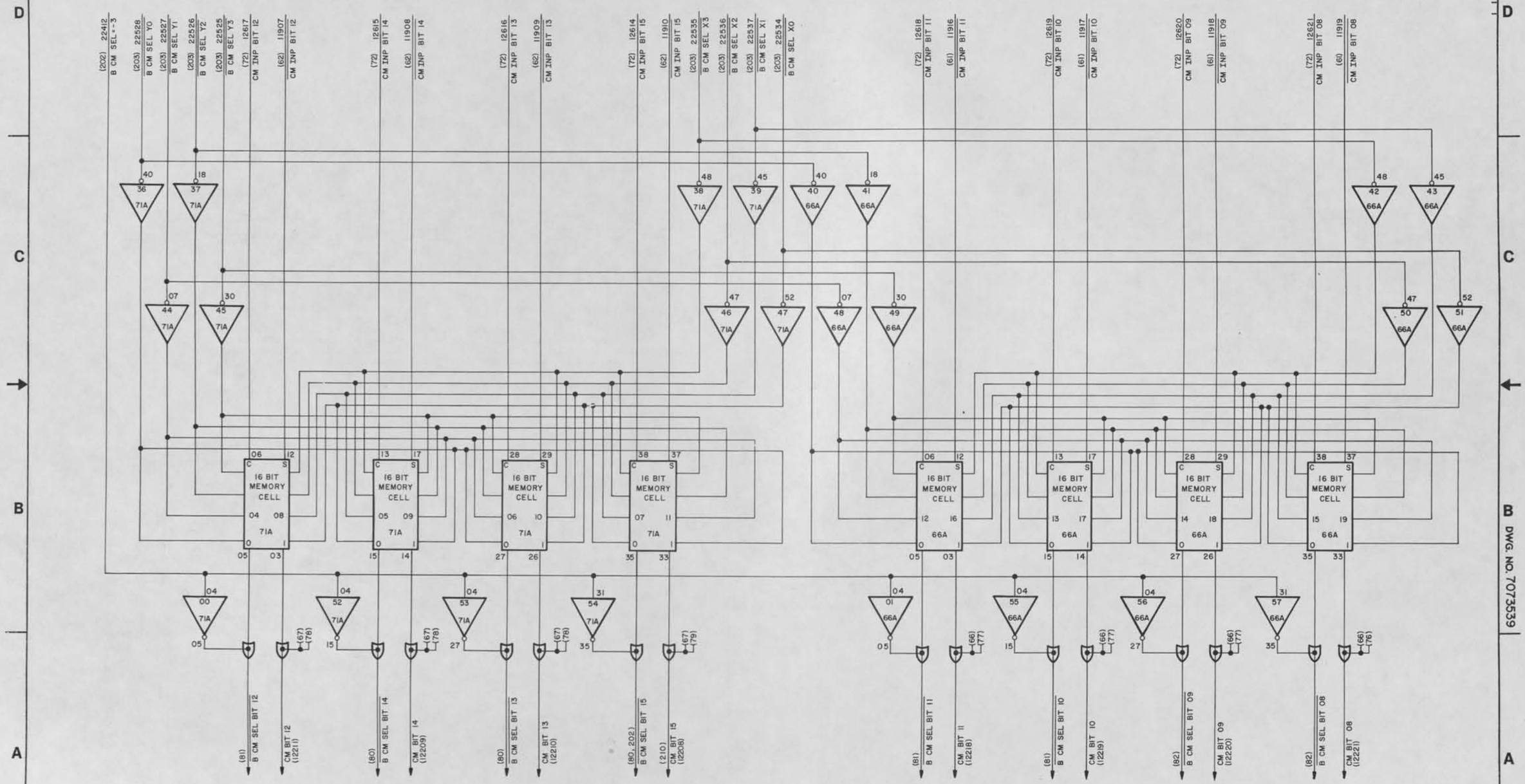

NOTE:
1. CARD TYPE-2820

B CONTROL MEMORY BITS 08-15 | 125

SIZE	CODE IDENT	DWG NO.
D	90536	7073539
SCALE	CLASS A	SHEET 70

DWG. NO. 7073539

UD 1-8534C

REVISIONS						
ZONE	LTR	EIR	DESCRIPTION	CHK	DATE	APPROVED
	BU	D06551	SEE EIR	EJ	2-18-72	W. [illegible]

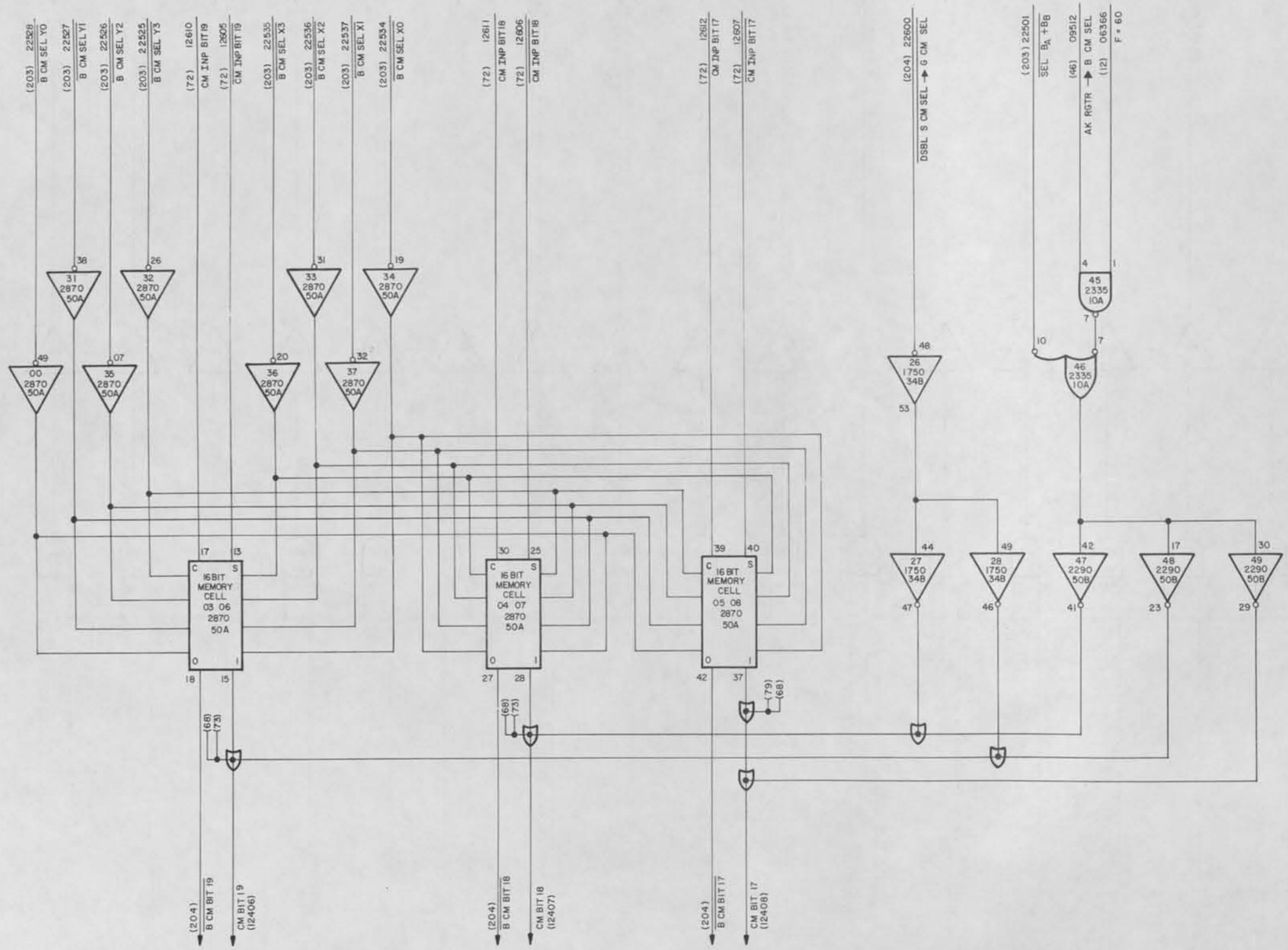

B CONTROL MEMORY BITS 17-19 | 124

SIZE	CODE IDENT	DWG NO.
D	90536	7073539
SCALE	CLASS A	SHEET 7

DWG. NO. 7073539

UD 1-8534C

REVISIONS						
ZONE	LTR	EIR	DESCRIPTION	CHK	DATE	APPROVED

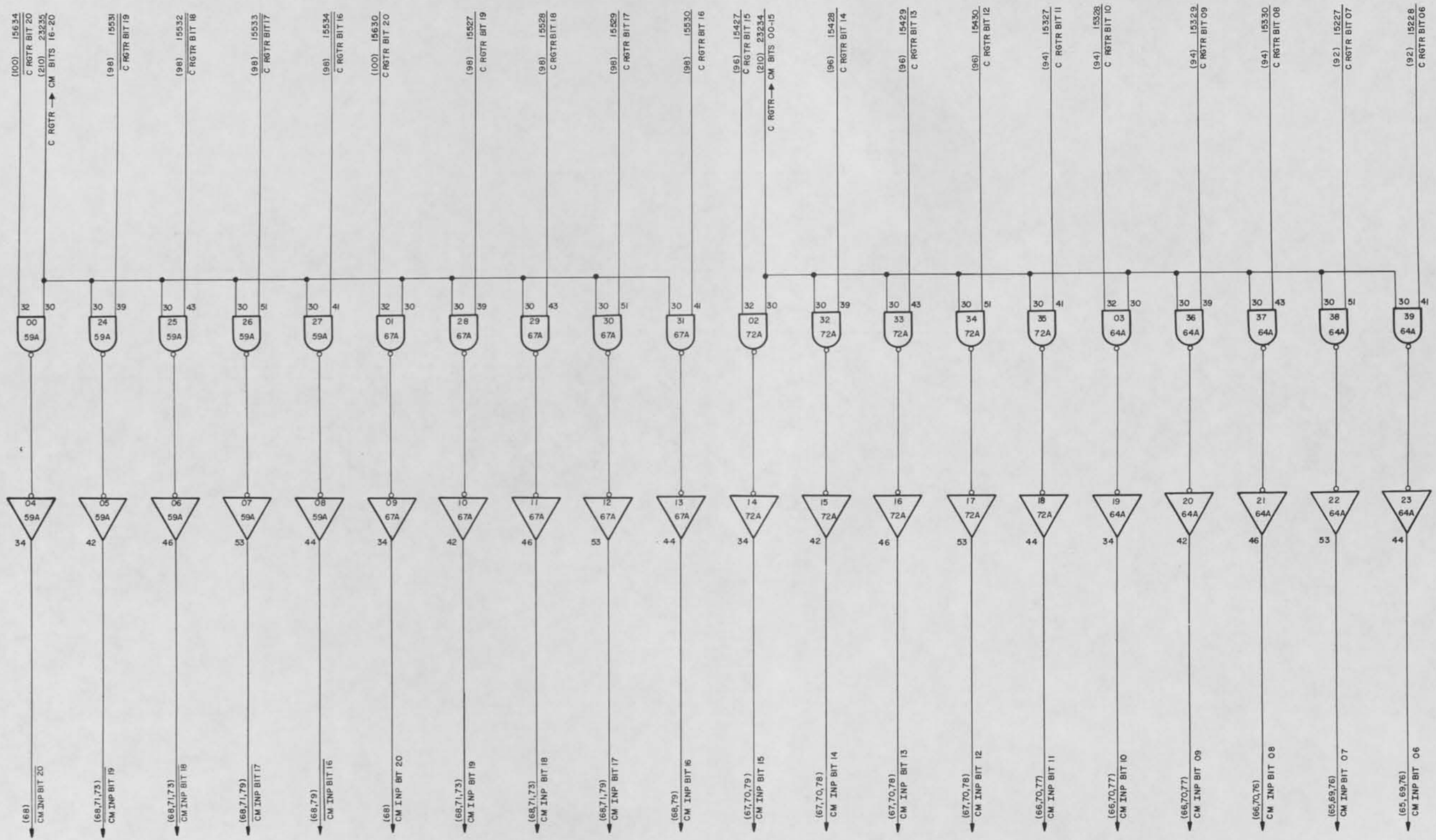

NOTE:
CARD TYPE — 2840

1/2 C REGISTER → CONTROL MEMORY 126

SIZE	CODE IDENT	DWG NO.
D	90536	7073539
SCALE	CLASS A	SHEET 72

DWG. NO. 7073539

UD 1-8534C

REVISIONS						
ZONE	LTR	EIR	DESCRIPTION	CHK	DATE	APPROVED
	CA	D06588	SEE EIR			

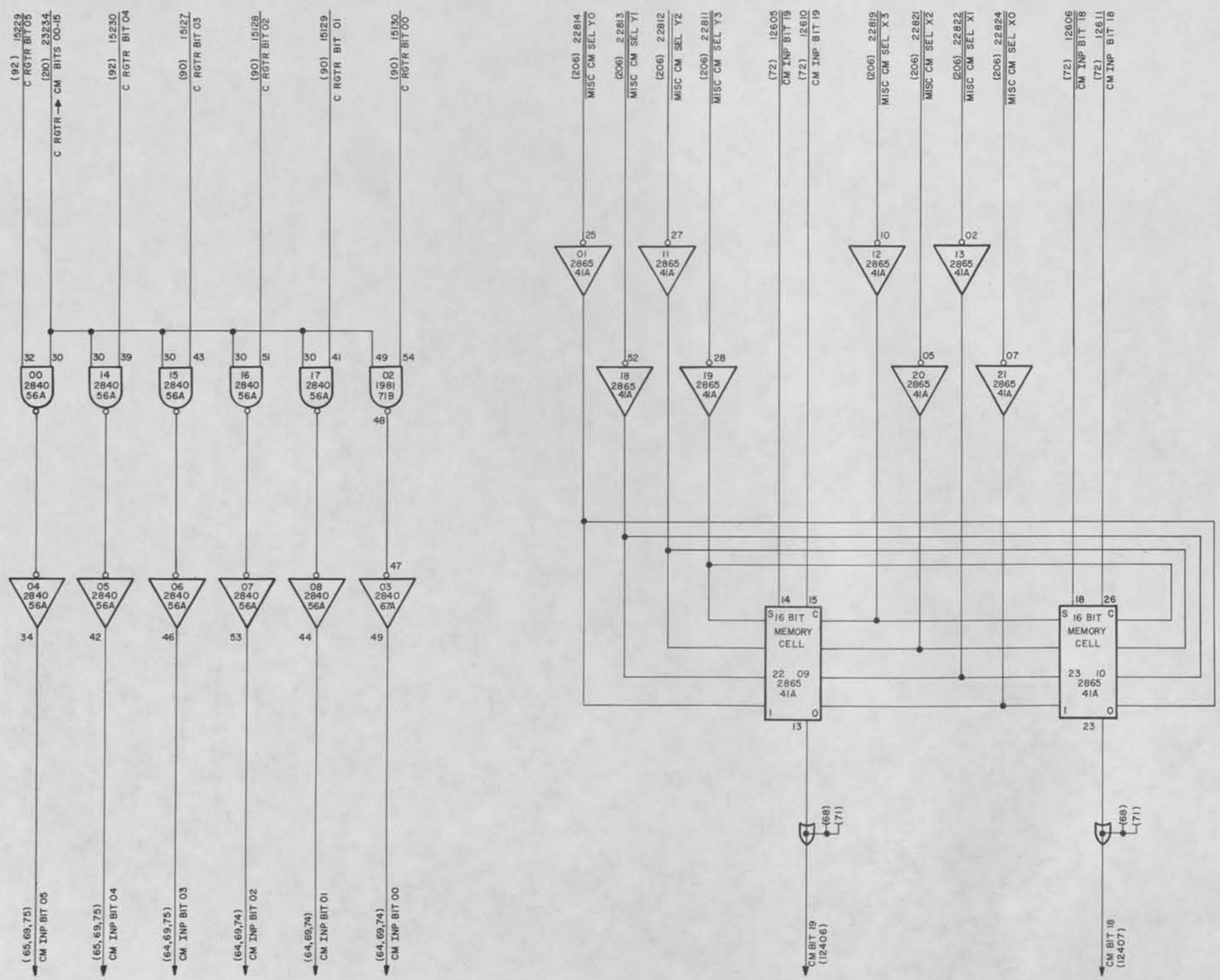

MISCELLANEOUS CONTROL MEMORY BITS 18,19,
C REGISTER → CONTROL MEMORY

127

SIZE	CODE IDENT	DWG NO.
D	90536	7073539
SCALE	CLASS A	SHEET 73

DWG. NO. 7073539

CHANGE 2

UD 1-8534C

REVISIONS						
ZONE	LTR	EIR	DESCRIPTION	CHK	DATE	APPROVED

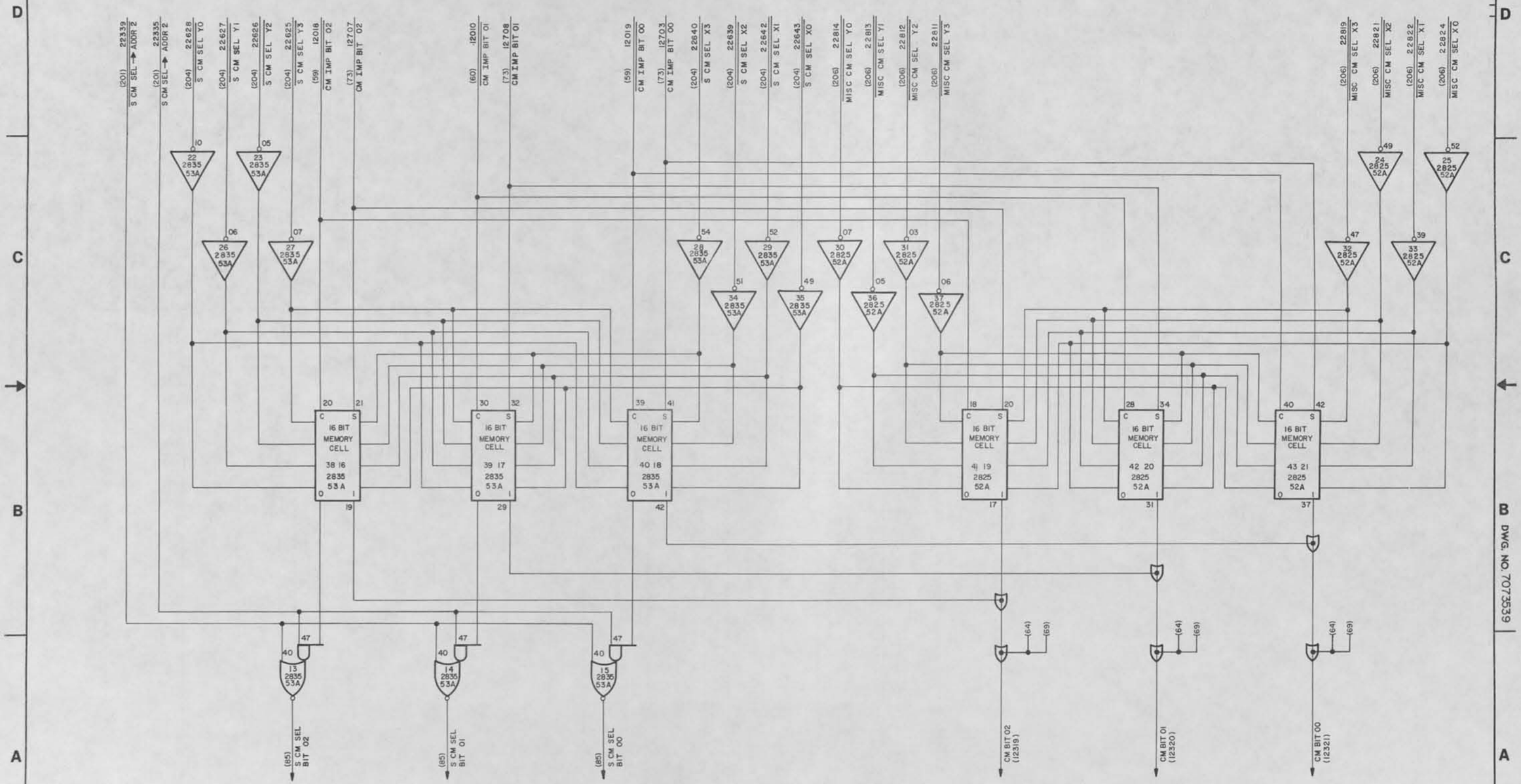

S CONTROL MEMORY
MISCELLANEOUS CONTROL MEMORY BITS 00-02

130

SIZE	CODE IDENT	DWG NO.
D	90536	7073539
SCALE	CLASS A	SHEET 74

DWG. NO. 7073539

UD 1-8534C

REVISIONS						
ZONE	LTR	EIR	DESCRIPTION	CHK	DATE	APPROVED

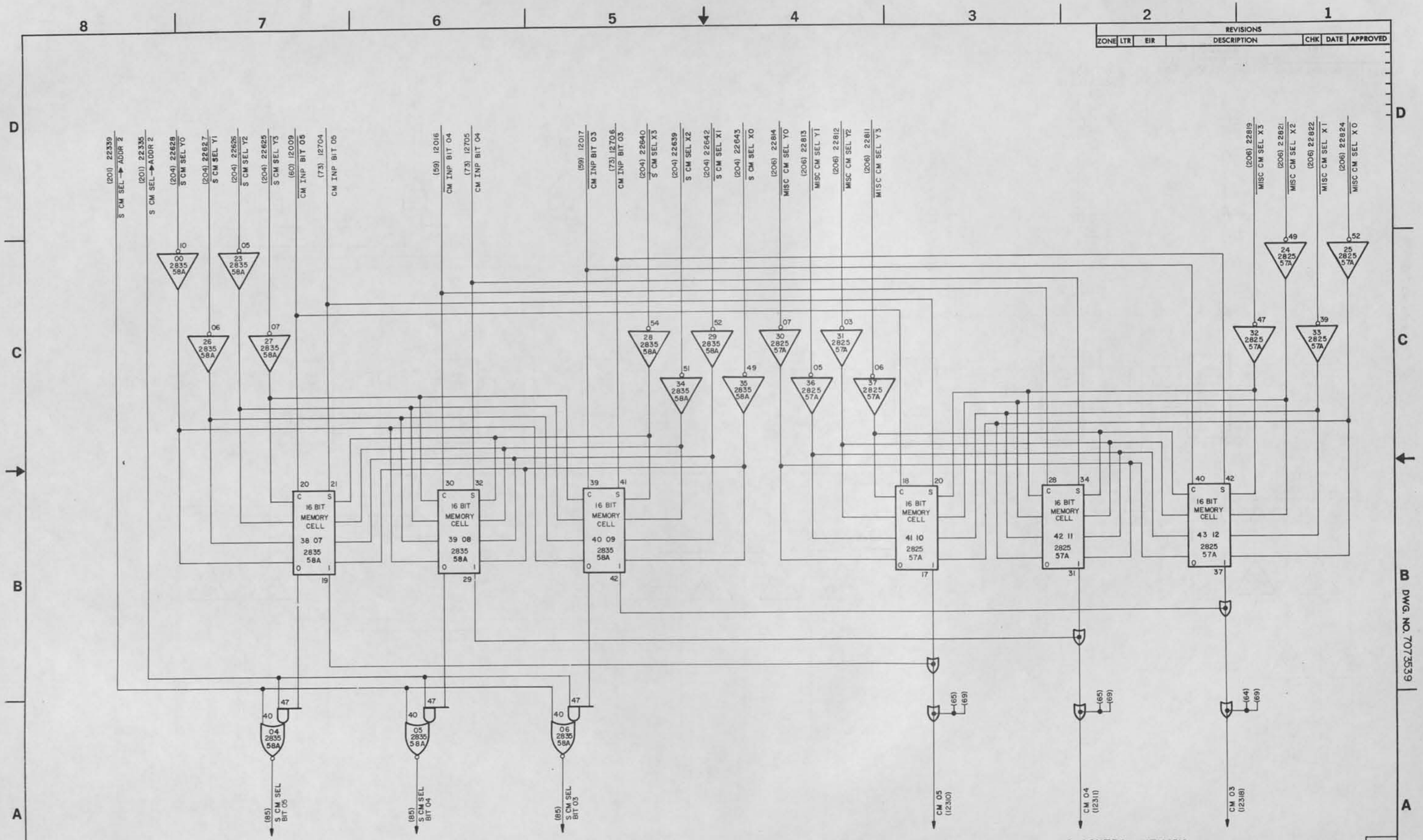

S CONTROL MEMORY,
MISCELLANEOUS CONTROL MEMORY, BITS 03-05

130

SIZE	CODE IDENT	DWG NO.
D	90536	7073539
SCALE	CLASS A	SHEET 75

UD 1-8534C

REVISIONS						
ZONE	LTR	EIR	DESCRIPTION	CHK	DATE	APPROVED

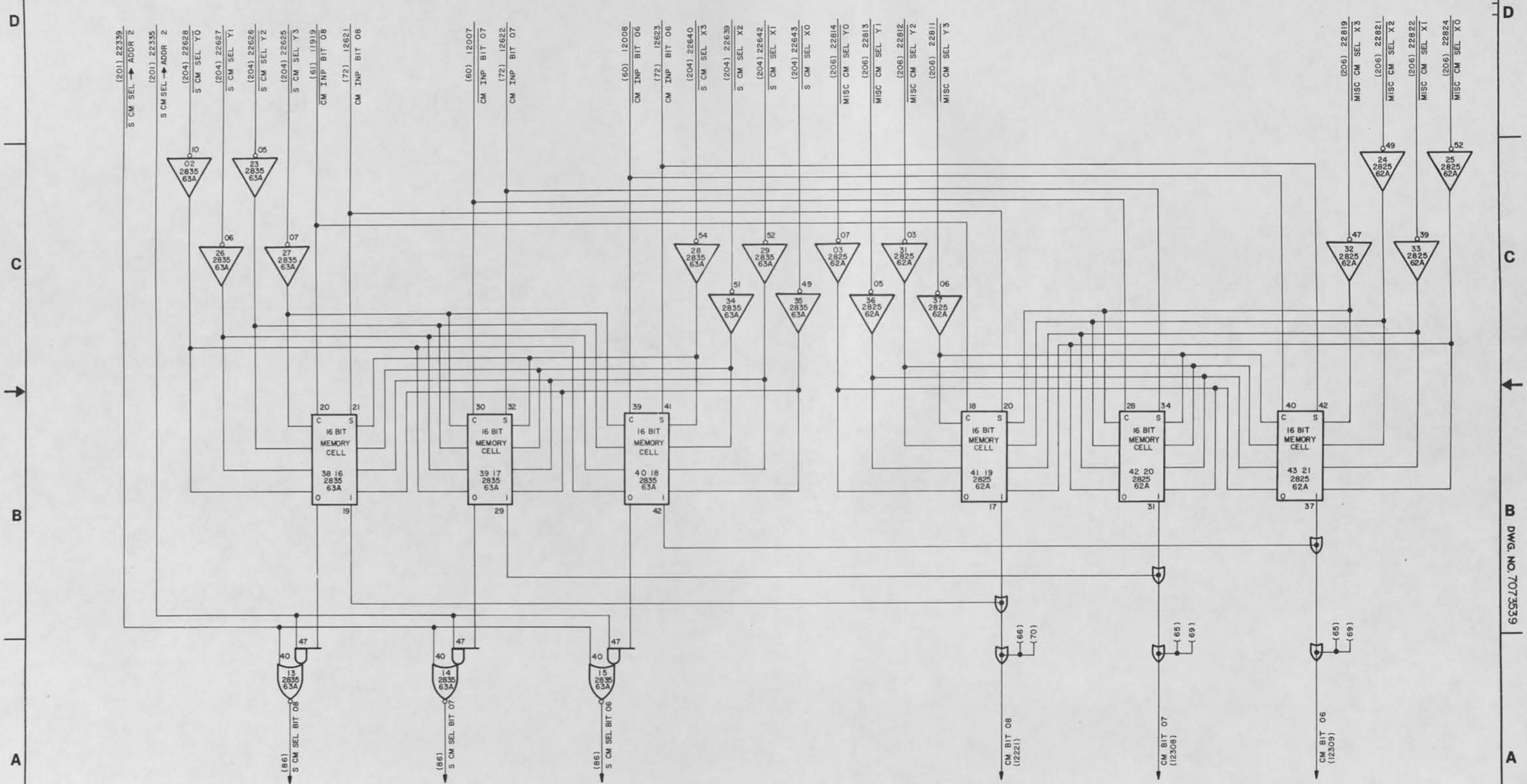

S CONTROL MEMORY,
MISCELLANEOUS CONTROL MEMORY, BITS 06-08

129

SIZE	CODE IDENT	DWG NO.
D	90536	7073539
SCALE	CLASS A	SHEET 76

DWG. NO. 7073539

UD 1-9534C

REVISIONS						
ZONE	LTR	EIR	DESCRIPTION	CHK	DATE	APPROVED

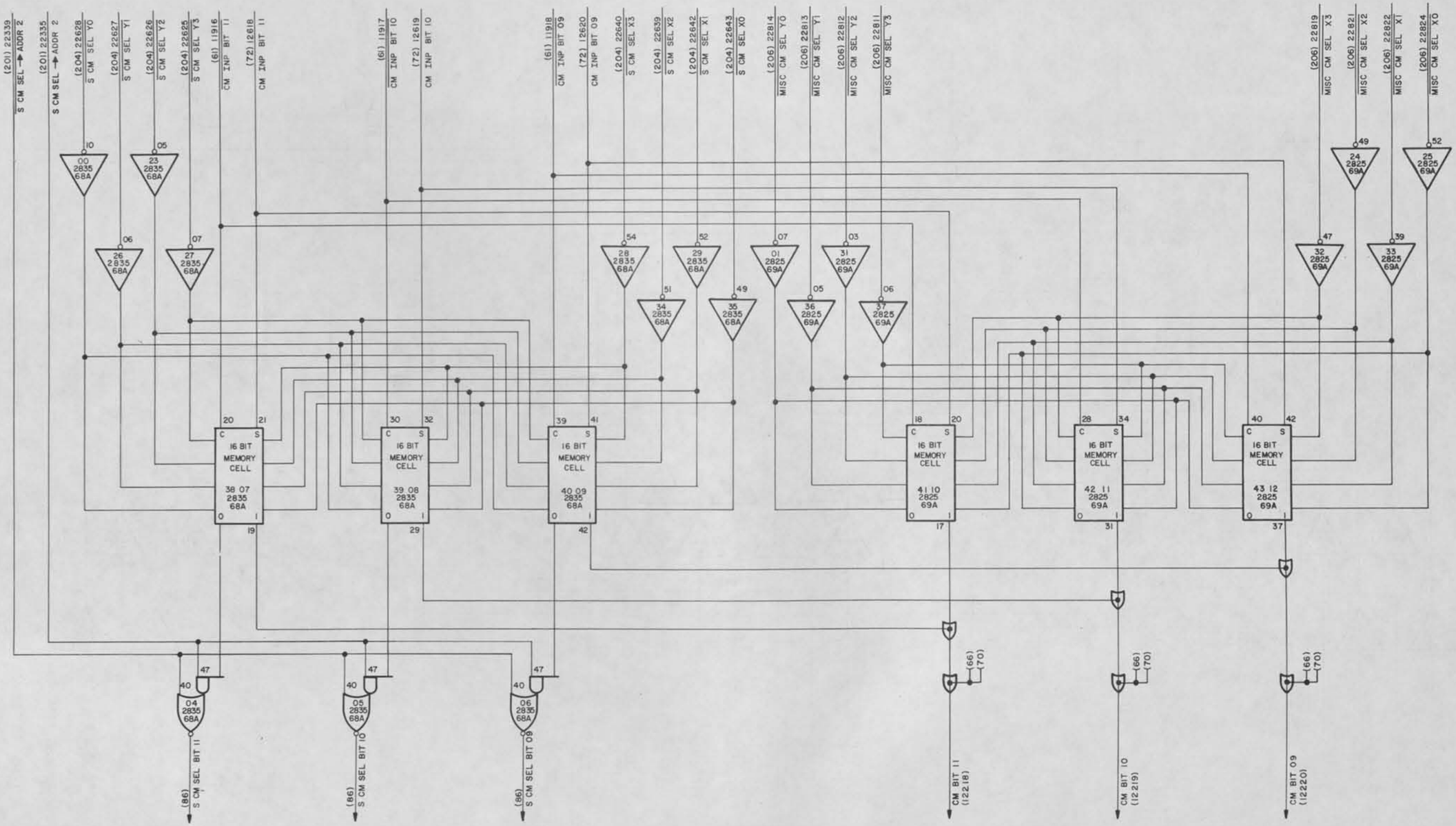

S CONTROL MEMORY,
MISCELLANEOUS CONTROL MEMORY, BITS 09-11

129

SIZE	CODE IDENT	DWG NO.
D	90536	7073539
SCALE	CLASS A	SHEET 77

DWG. NO. 7073539

UD 1-2534C

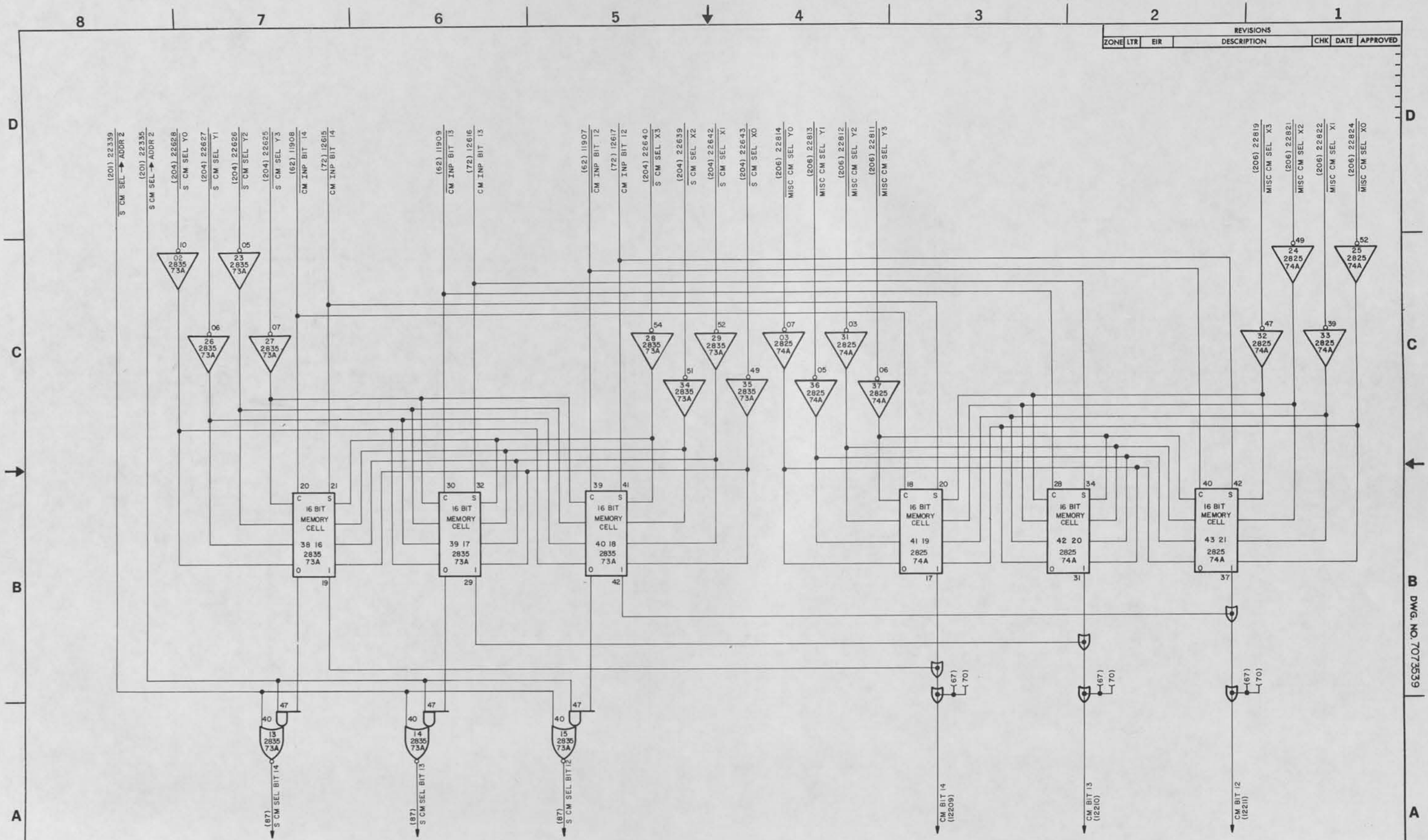

S CONTROL MEMORY, MISCELLANEOUS CONTROL MEMORY BITS 12 — 14

128

SIZE	CODE IDENT	DWG NO.
D	90536	7073539

SCALE | CLASS A | SHEET 78

UD 1-8534C

REVISIONS						
ZONE	LTR	EIR	DESCRIPTION	CHK	DATE	APPROVED
	AF	004719	SEE EIR			

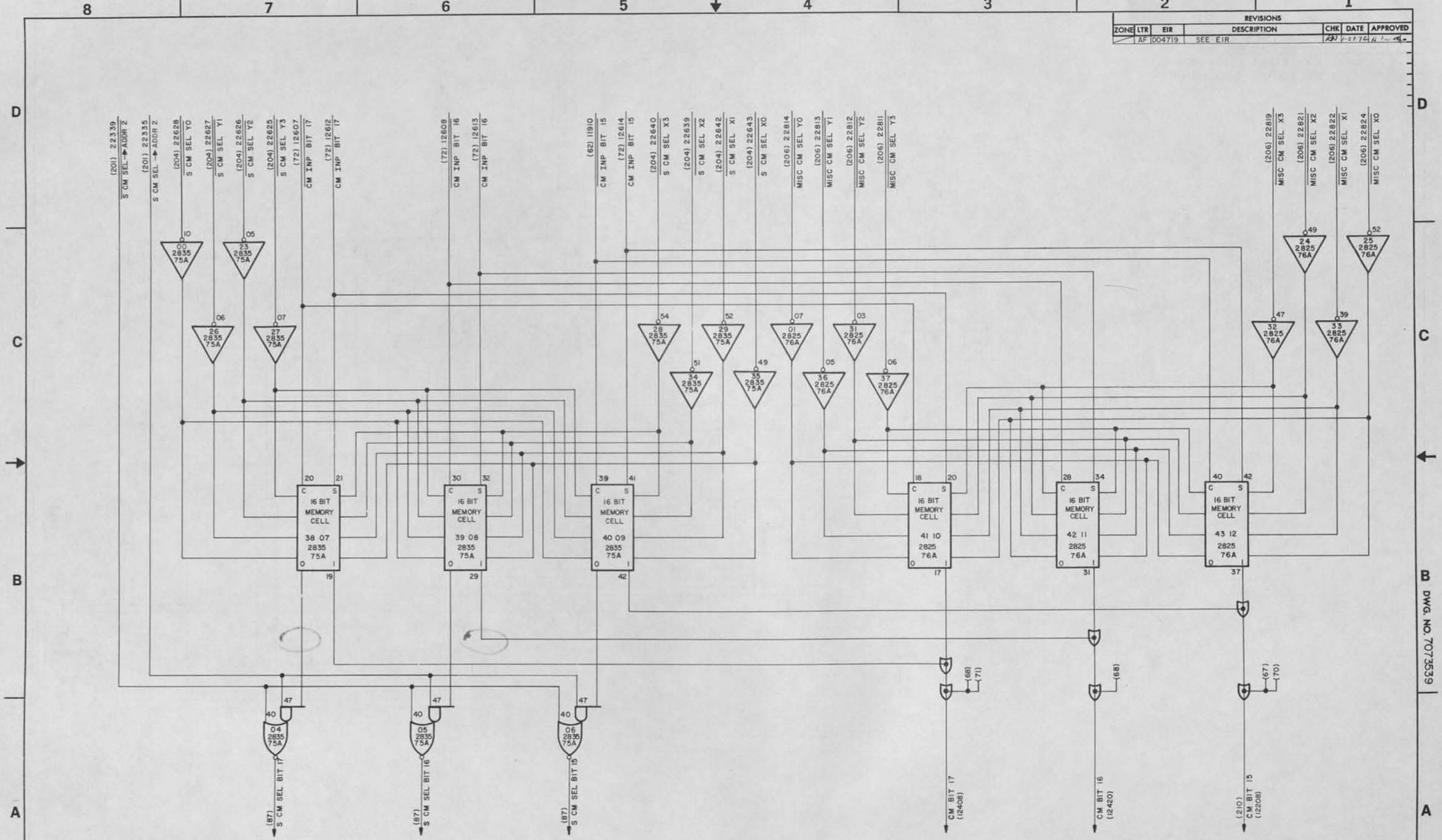

S CONTROL MEMORY, MISCELLANEOUS CONTROL MEMORY, BITS 15 — 17

128

SIZE	CODE IDENT	DWG NO.
D	90536	7073539
SCALE	CLASS A	SHEET 79

DWG. NO. 7073539

UD 1-2534C

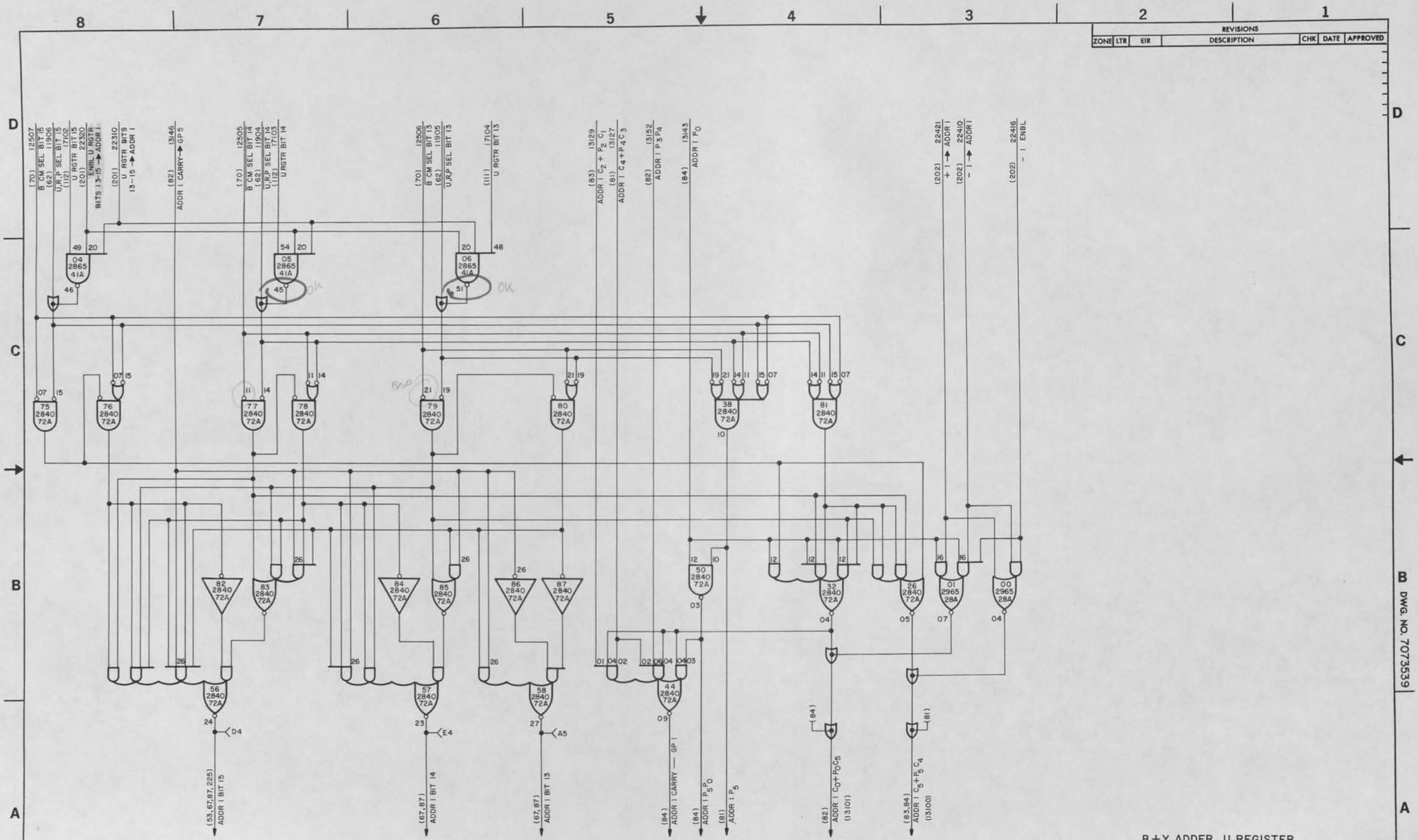

B+Y ADDER, U REGISTER
SELECTOR, ± I SELECTOR, PART I

131

SIZE	CODE IDENT	DWG NO.
D	90536	7073539
SCALE	CLASS A	SHEET 80

DWG. NO. 7073539

UD 1-2534C

ZONE	LTR	EIR	DESCRIPTION	CHK	DATE	APPROVED
REVISIONS						

REVISIONS						
ZONE	LTR	EIR	DESCRIPTION	CHK	DATE	APPROVED

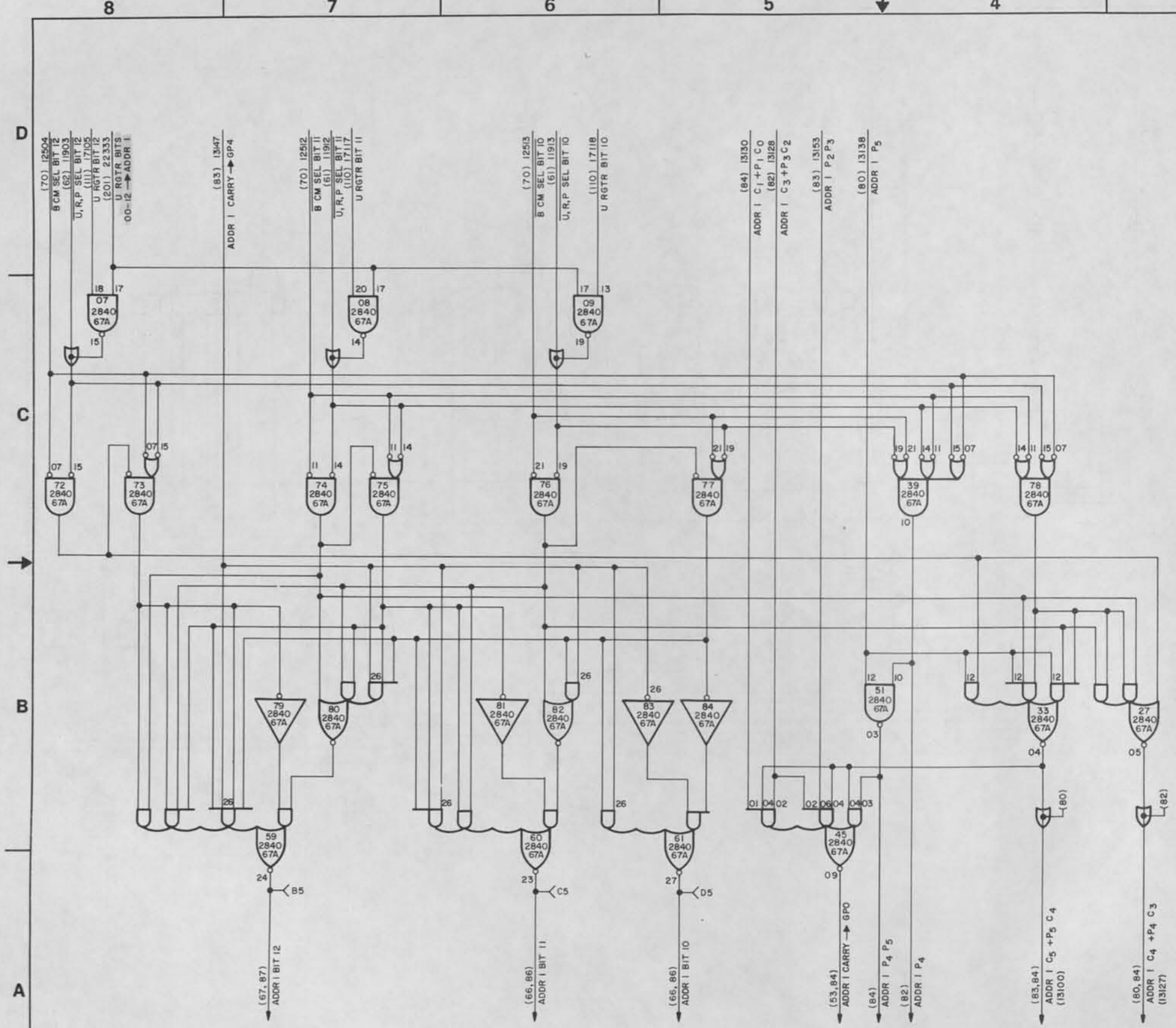

B+Y ADDER, U REGISTER SELECTOR, ± 1 SELECTOR (PART 2)

131

SIZE	CODE IDENT	DWG NO.
D	90536	7073539
SCALE	CLASS A	SHEET 81

DWG. NO. 7073539

UD 1-5534C

REVISIONS						
ZONE	LTR	EIR	DESCRIPTION	CHK	DATE	APPROVED

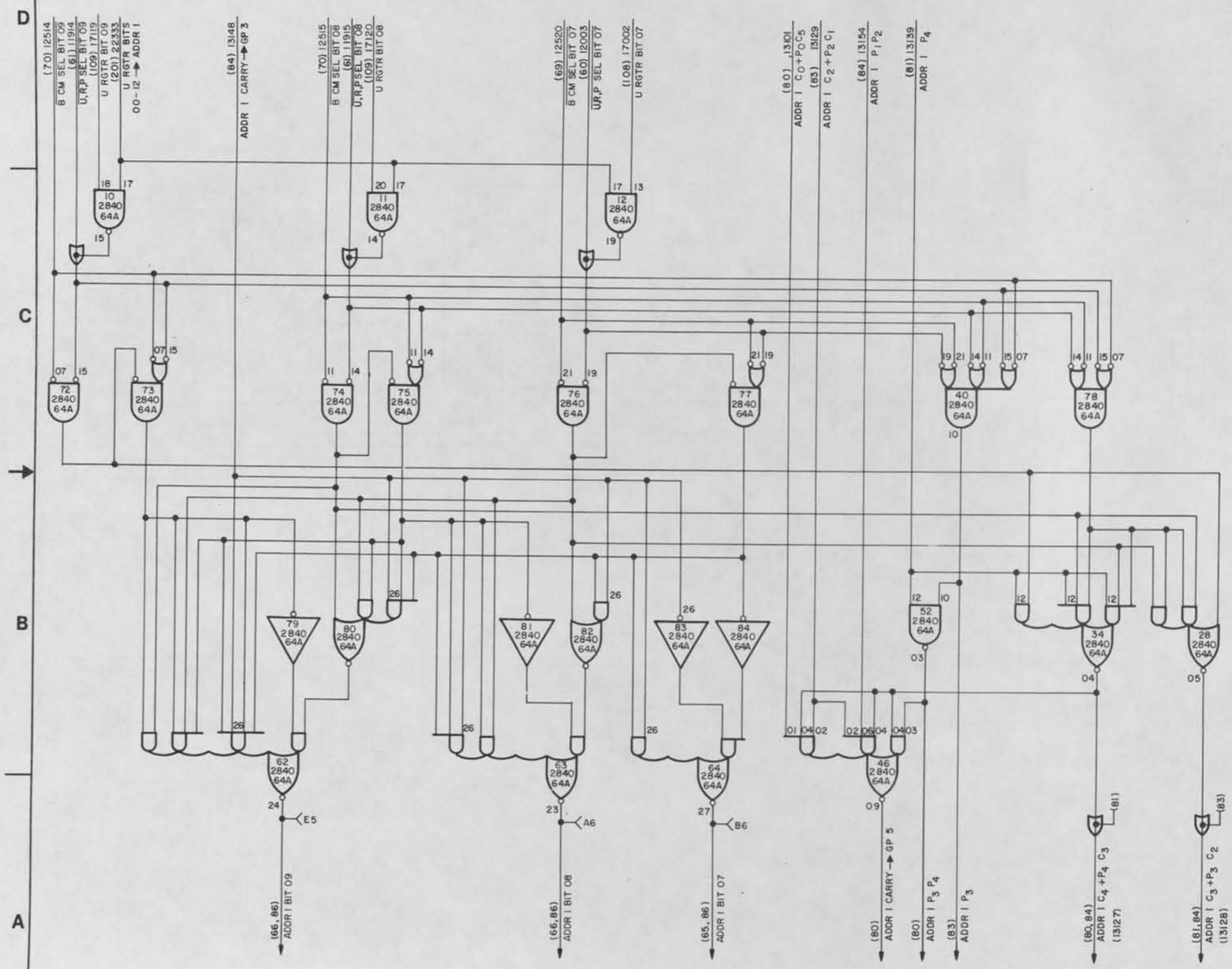

B+Y ADDER, U REGISTER SELECTOR, ± I SELECTOR (PART 3) 131

SIZE	CODE IDENT	DWG NO.
D	90536	7073539
SCALE	CLASS A	SHEET 82

DWG. NO. 7073539

UD 1-8534C

REVISIONS						
ZONE	LTR	EIR	DESCRIPTION	CHK	DATE	APPROVED

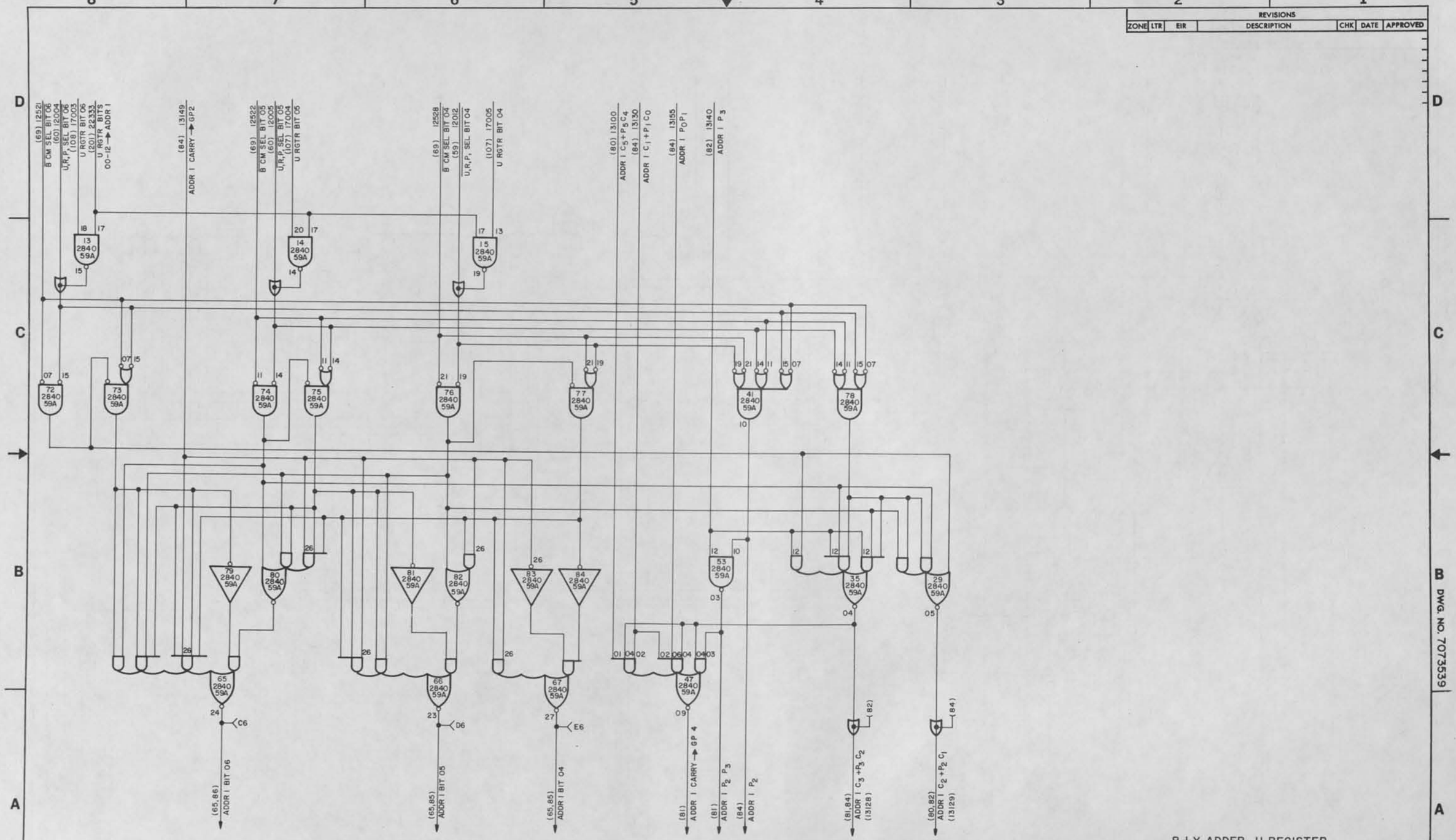

B+Y ADDER, U REGISTER SELECTOR, ± I SELECTOR (PART 4) 131

SIZE	CODE IDENT	DWG NO.
D	90536	7073539
SCALE	CLASS A	SHEET 83

DWG. NO. 7073539

UD 1-8534C

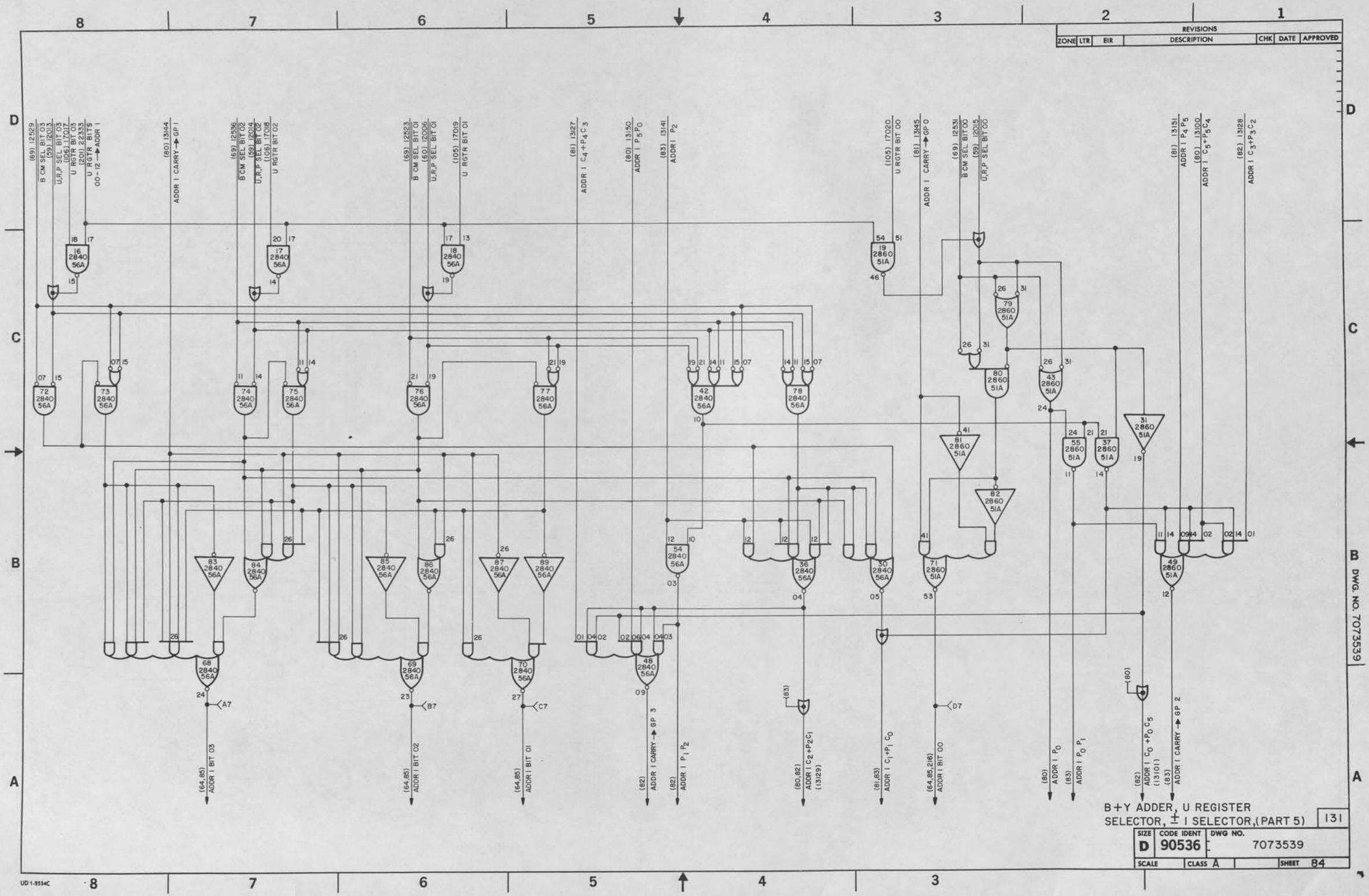
REVISIONS
ZONE LTR EIR DESCRIPTION CHK DATE APPROVED
(69) 12529 B CM SEL BIT 03
(99) 12013 U,R,P SEL BIT 03
(106) 17017 U RGTR BIT 03
(201) 22333 U RGTR BITS 00-12 → ADDR I
(80) 13144 ADDR I CARRY → GP I
(69) 12536 B CM SEL BIT 02
(99) 12014 U,R,P SEL BIT 02
(106) 17018 U RGTR BIT 02
(69) 12523 B CM SEL BIT 01
(60) 12006 U,R,P SEL BIT 01
(105) 17019 U RGTR BIT 01
(81) 13127 ADDR I C4+P4C3
(80) 13150 ADDR I P5P0
(83) 13141 ADDR I P2
(105) 17020 U RGTR BIT 00
(81) 13145 ADDR I CARRY → GP 0
(69) 12531 B CM SEL BIT 00
(59) 12015 U,R,P SEL BIT 00
(81) 13151 ADDR I P4P5
(80) 13100 ADDR I C5+P5C4
(82) 13128 ADDR I C3+P3C2
(64,85) ADDR I BIT 03
(64,85) ADDR I BIT 02
(64,85) ADDR I BIT 01
(82) ADDR I CARRY → GP 3
(82) ADDR I P1P2
(80,82) ADDR I C2+P2C1 (13129)
(81,83) ADDR I C1+P1C0
(64,85,216) ADDR I BIT 00
(80) ADDR I P0
(83) ADDR I P0P1
(82) ADDR I C0+P0C5 (13101)
(83) ADDR I CARRY → GP 2
B+Y ADDER, U REGISTER
SELECTOR, ± I SELECTOR, (PART 5)
131
SIZE D
CODE IDENT 90536
DWG NO. 7073539
SCALE
CLASS A
SHEET 84
DWG. NO. 7073539
UD 1-3534C

REVISIONS						
ZONE	LTR	EIR	DESCRIPTION	CHK	DATE	APPROVED

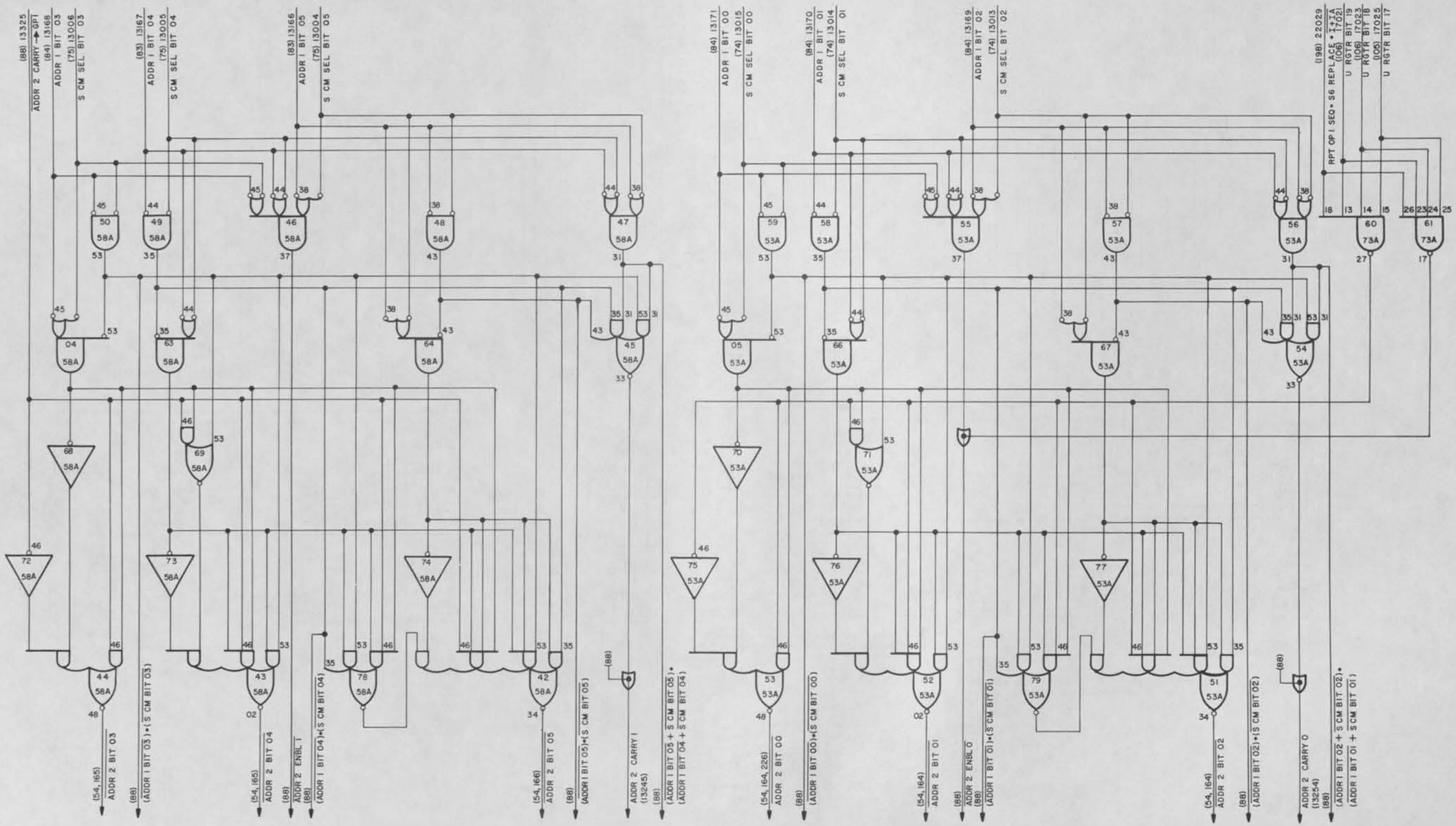

NOTE:
CARD TYPE — 2835

BASE ADDER W/O CARRY, PART I

132

SIZE	CODE IDENT	DWG NO.
D	90536	7073539
SCALE	CLASS A	SHEET 85

DWG. NO. 7073539

UD 1-8534C

REVISIONS						
ZONE	LTR	EIR	DESCRIPTION	CHK	DATE	APPROVED

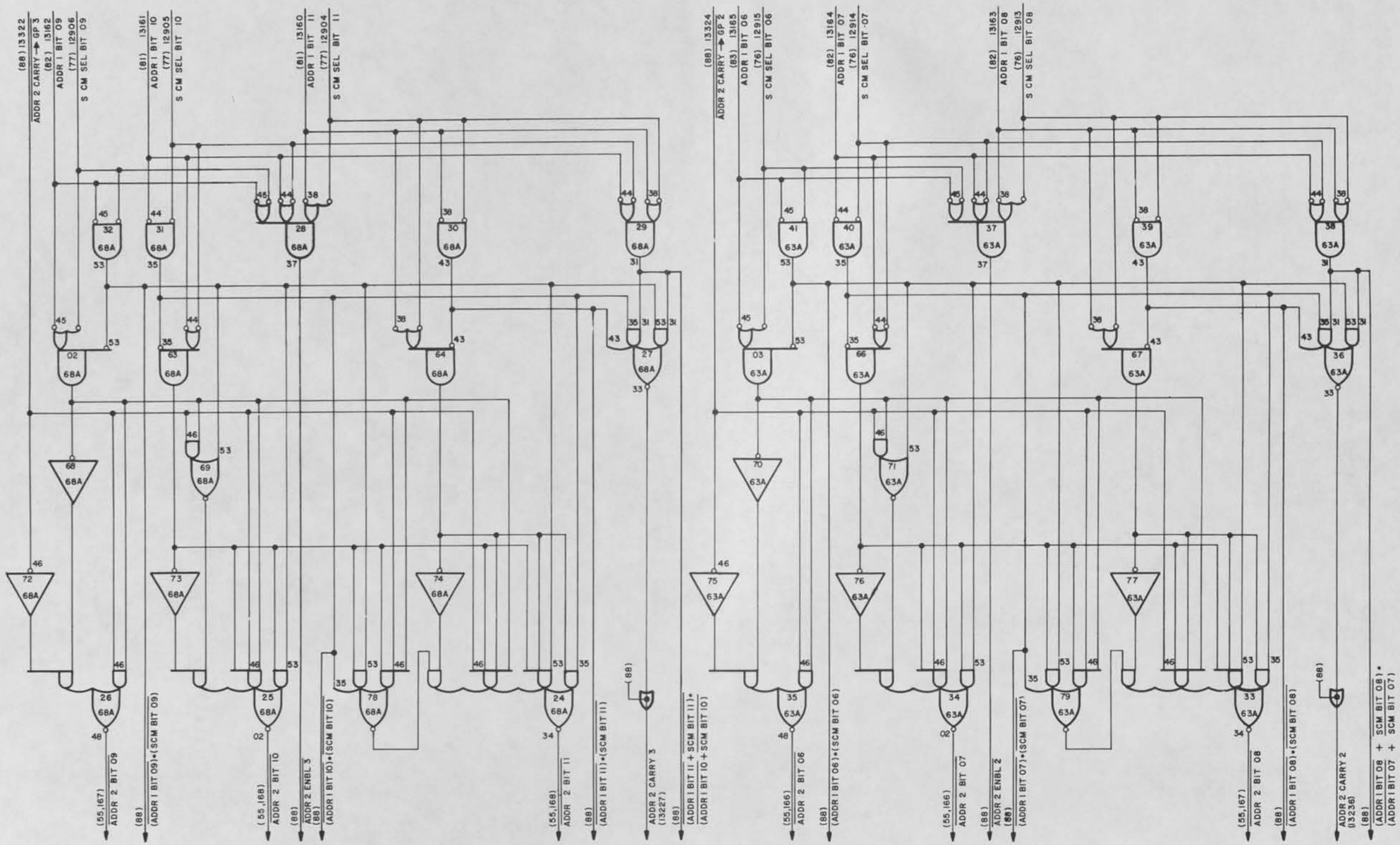

NOTE:
CARD TYPE — 2835

BASE ADDER W/O CARRY, PART 2

132

SIZE	CODE IDENT	DWG NO.
D	90536	7073539
SCALE	CLASS A	SHEET 86

DWG. NO. 7073539

UD 1-8534C

REVISIONS						
ZONE	LTR	EIR	DESCRIPTION	CHK	DATE	APPROVED

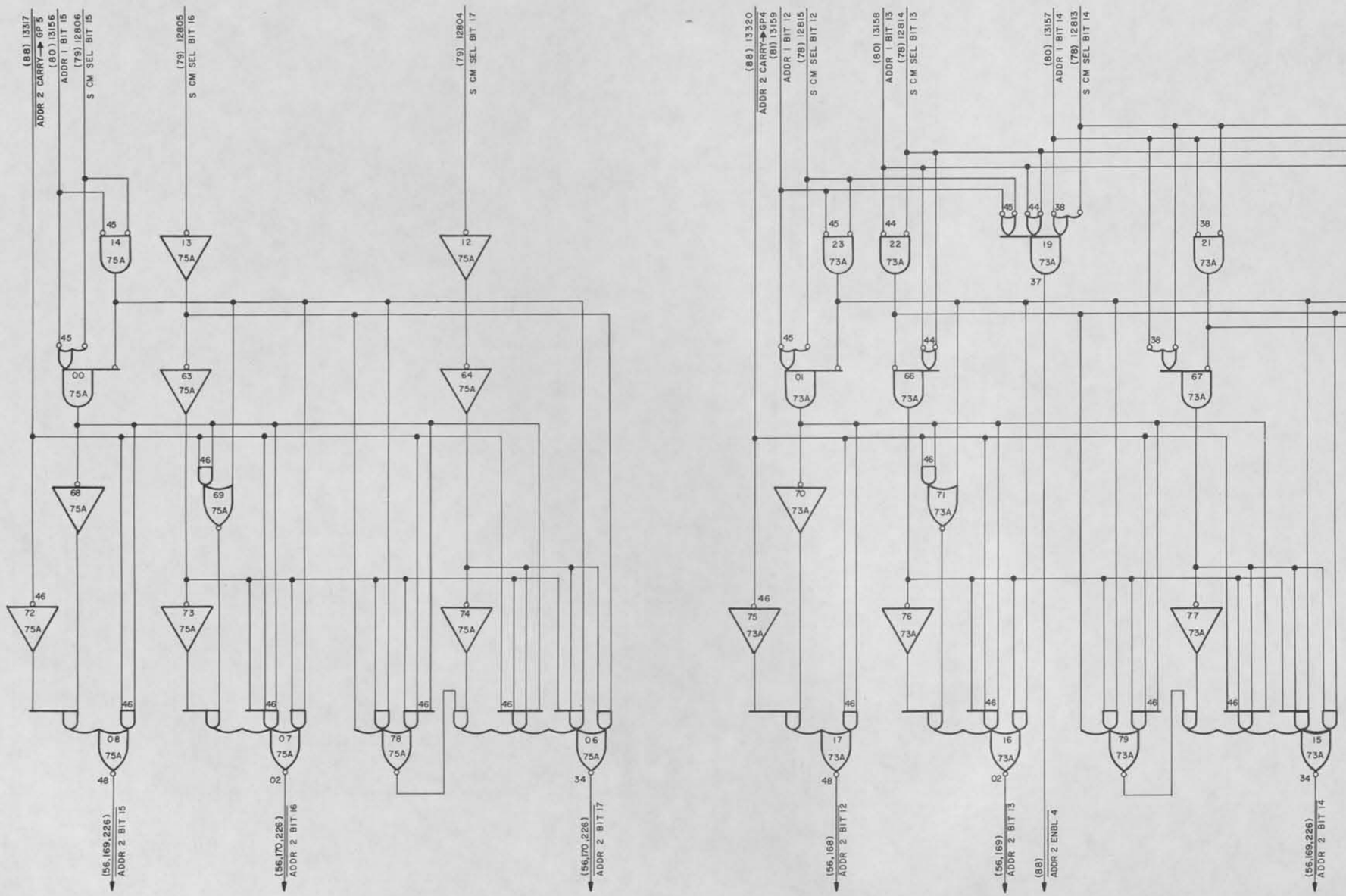

NOTE:
CARD TYPE — 2835

BASE ADDER W/O CARRY, PART 3 | 132

SIZE	CODE IDENT	DWG NO.
D	90536	7073539
SCALE	CLASS A	SHEET 87

DWG. NO. 7073539

UD 1-8534C

REVISIONS						
ZONE	LTR	EIR	DESCRIPTION	CHK	DATE	APPROVED
	CA	D06588	SEE EIR		12-5-72	

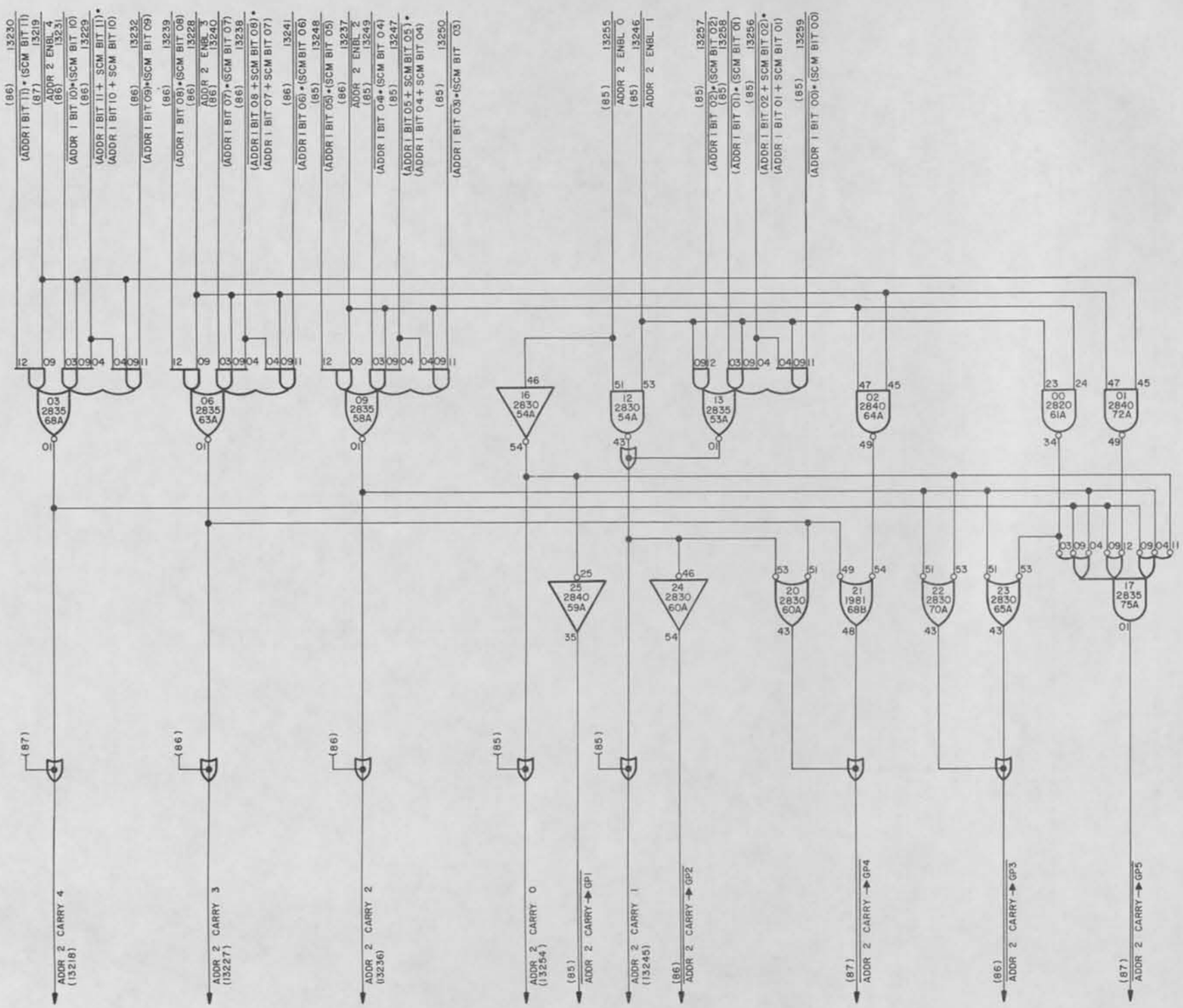

CHANGE 2

BASE ADDER CARRY 133

SIZE	CODE IDENT	DWG NO.
D	90536	7073539
SCALE	CLASS A	SHEET 88

DWG. NO. 7073539

UD 1-8534C

REVISIONS						
ZONE	LTR	EIR	DESCRIPTION	CHK	DATE	APPROVED

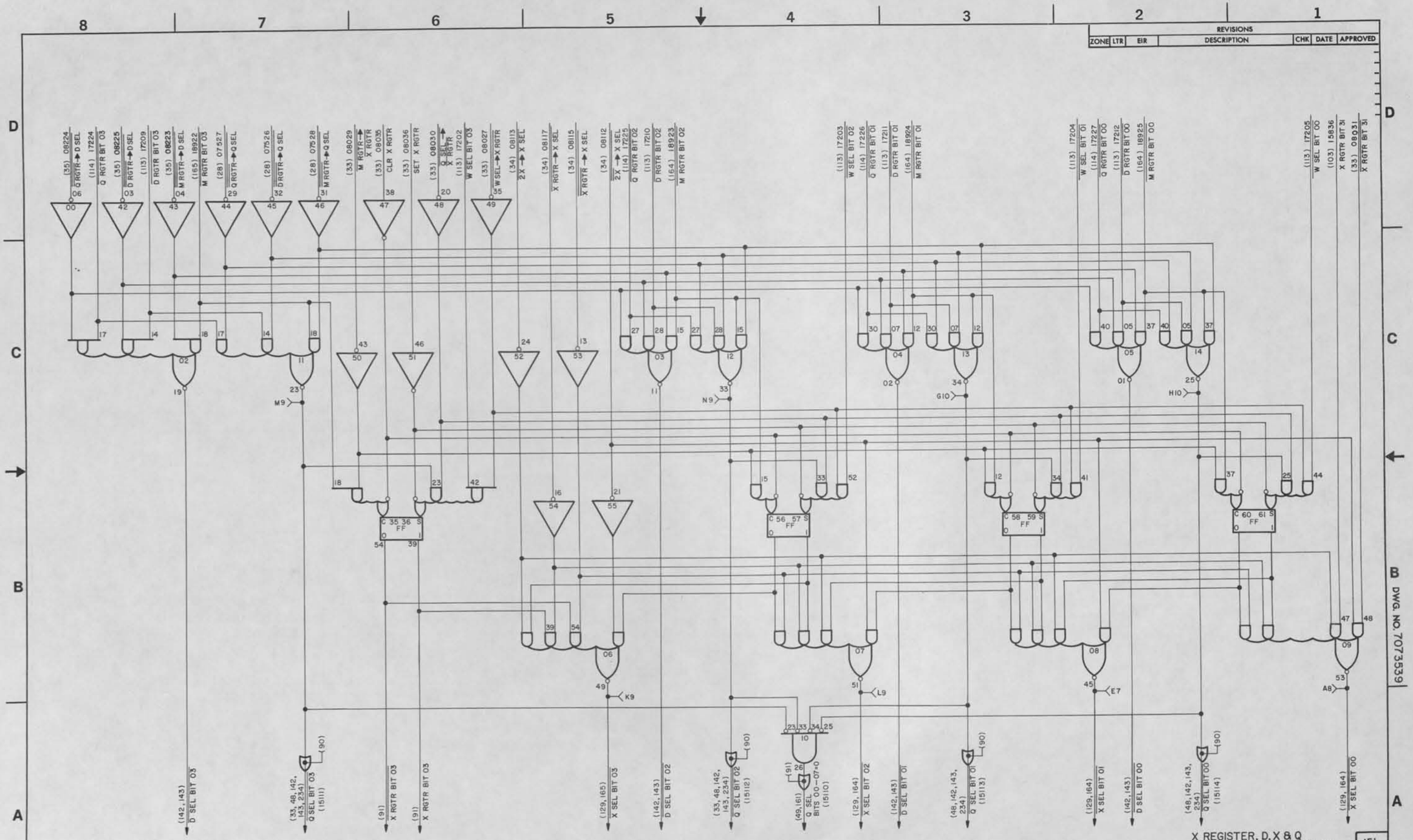

NOTE:
1. CARD TYPE-2015
2. CARD LOCATION-77C

X REGISTER, D, X & Q SELECTORS, BITS 00-03

151

SIZE	CODE IDENT	DWG NO.
D	90536	7073539
SCALE	CLASS A	SHEET 89

DWG. NO. 7073539

UD 1-2534C

REVISIONS						
ZONE	LTR	EIR	DESCRIPTION	CHK	DATE	APPROVED
	CA	D06588	SEE EIR		12-15-72	

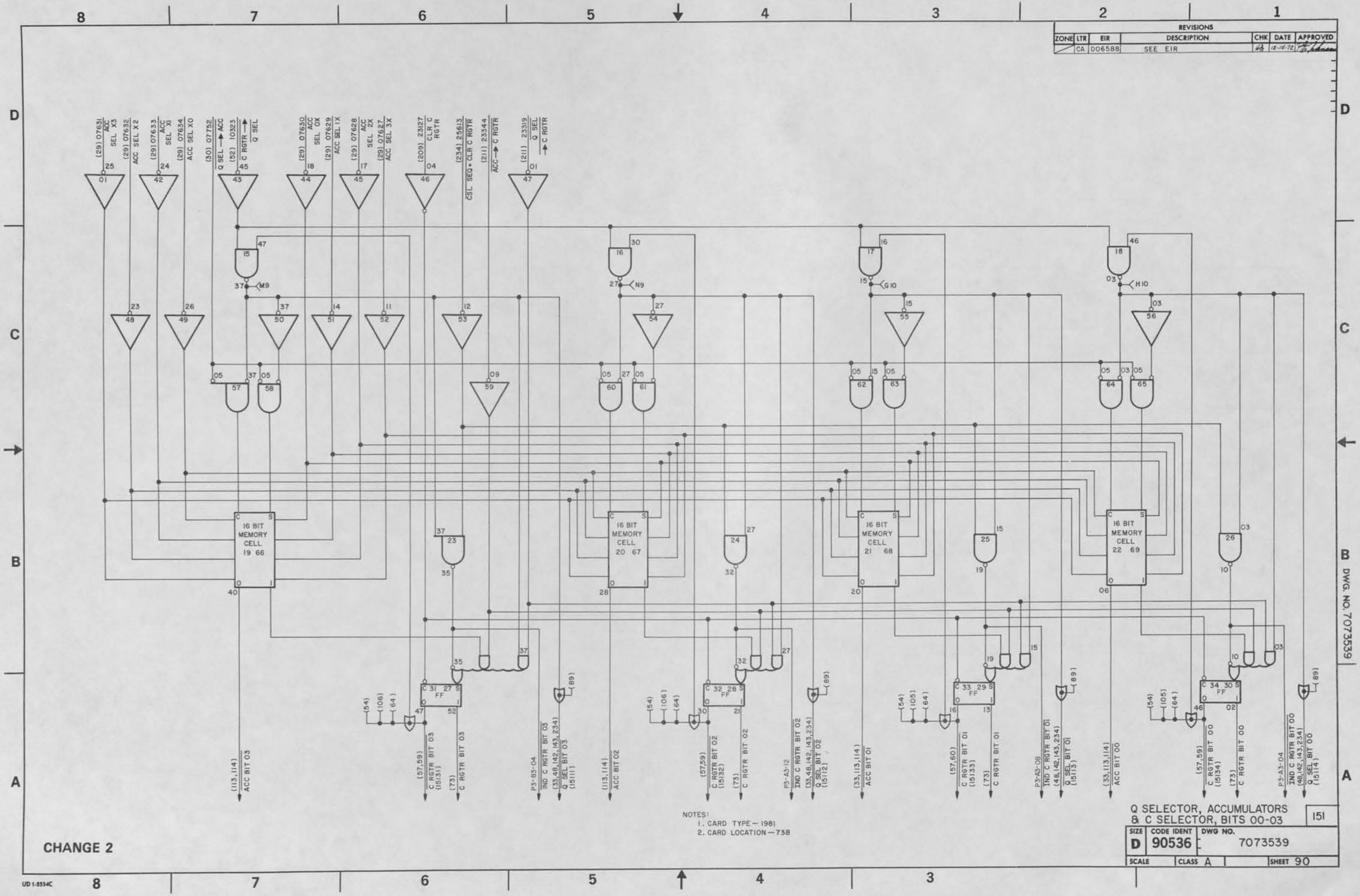

NOTES:
1. CARD TYPE — 1981
2. CARD LOCATION — 738

Q SELECTOR, ACCUMULATORS & C SELECTOR, BITS 00-03

151

SIZE	CODE IDENT	DWG NO.
D	90536	7073539
SCALE	CLASS A	SHEET 90

CHANGE 2

UD 1-2534C

REVISIONS						
ZONE	LTR	EIR	DESCRIPTION	CHK	DATE	APPROVED

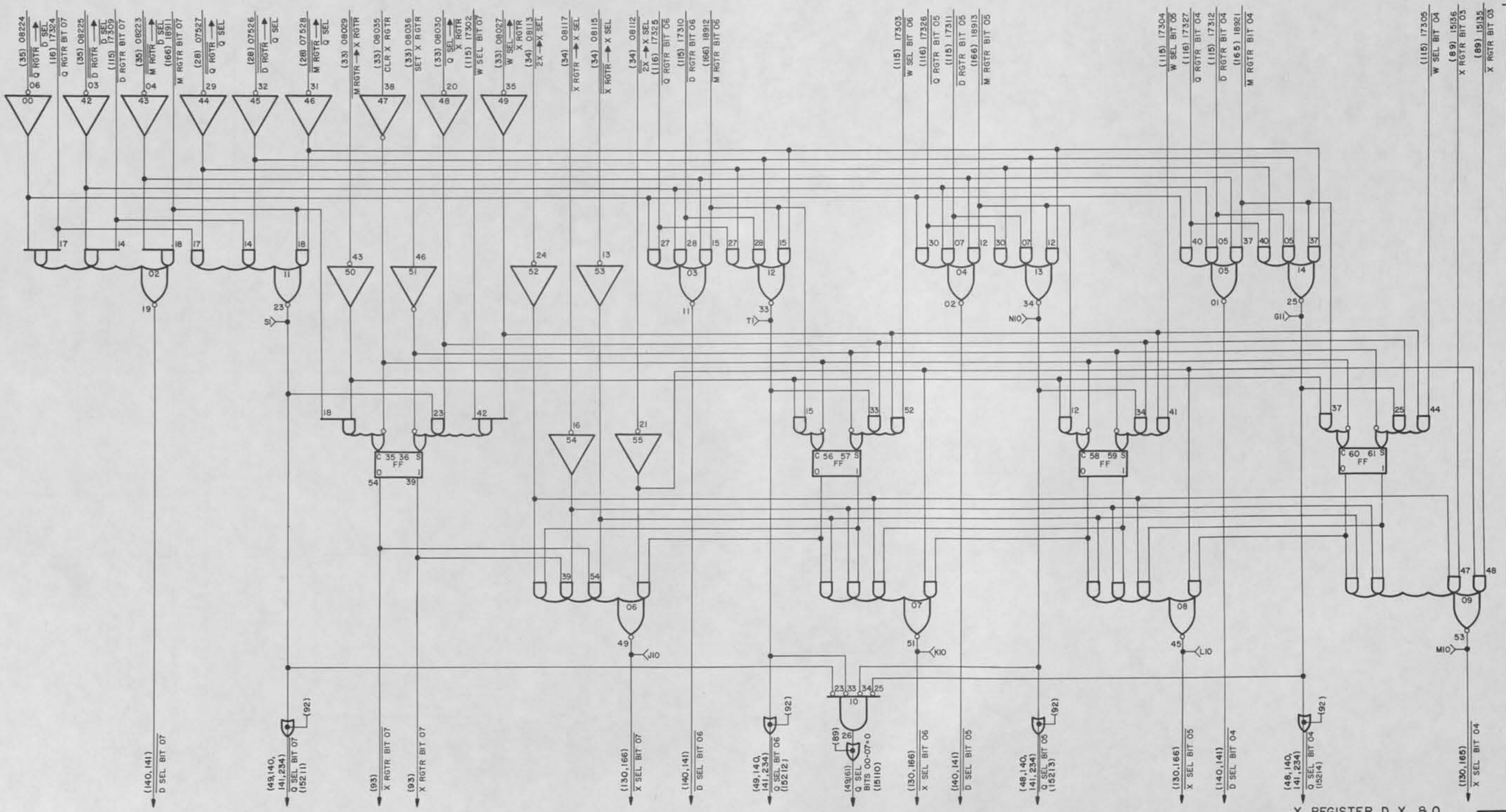

NOTE:
1. CARD TYPE-2015
2. CARD LOCATION-74C

X REGISTER, D, X, & Q SELECTORS, BITS 04-07

152

SIZE	CODE IDENT	DWG NO.
D	90536	7073539
SCALE	CLASS A	SHEET 9

DWG. NO. 7073539

UD 1-2534C

REVISIONS						
ZONE	LTR	EIR	DESCRIPTION	CHK	DATE	APPROVED
	CA	D06588	SEE EIR		12-15-72	

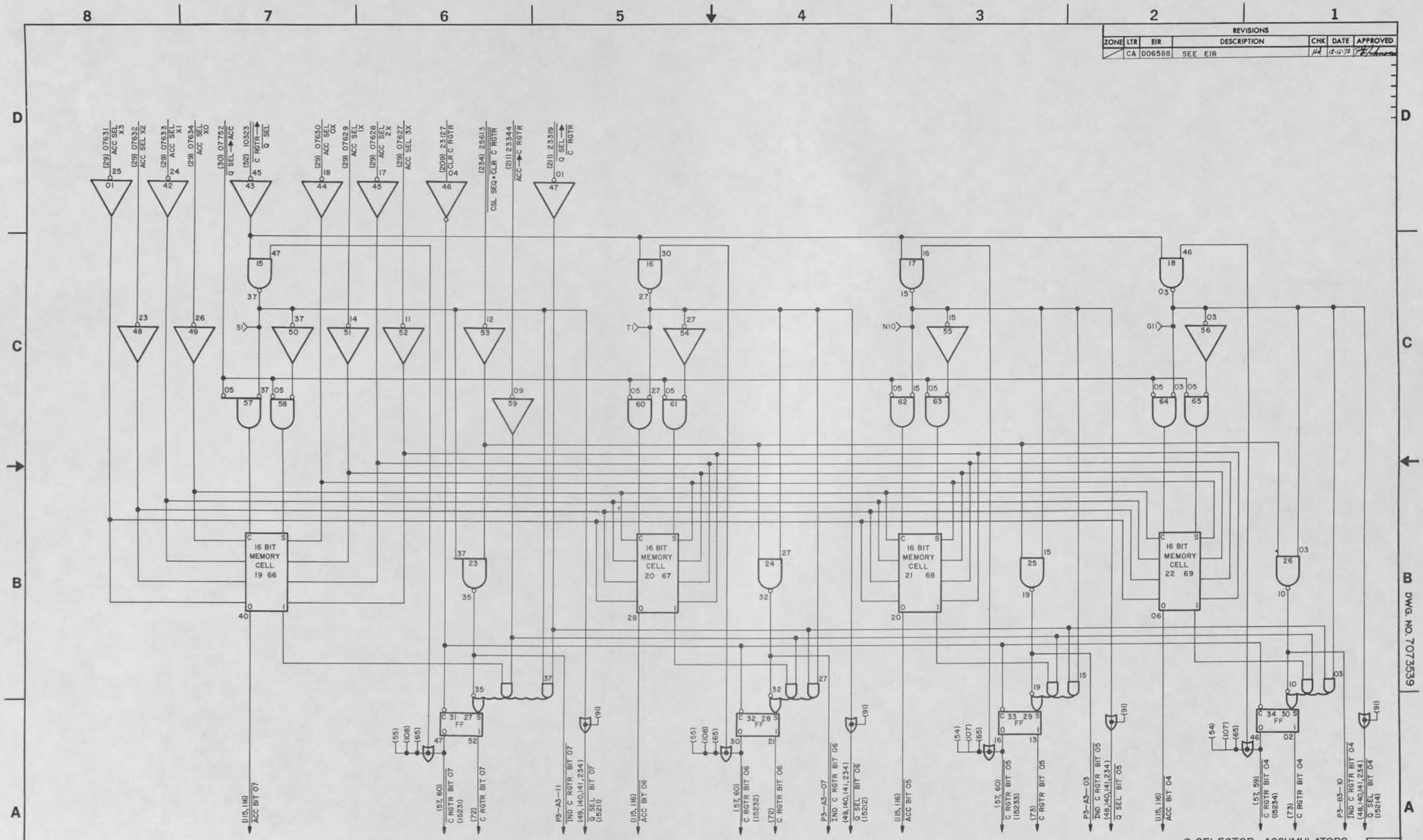

NOTES:
1. CARD TYPE — 1981
2. CARD LOCATION — 72B

Q SELECTOR, ACCUMULATORS & C SELECTOR, BITS 04—07

152

SIZE	CODE IDENT	DWG NO.
D	90536	7073539
SCALE	CLASS A	SHEET 92

DWG. NO. 7073539

CHANGE 2

UD 1-8534C

REVISIONS						
ZONE	LTR	EIR	DESCRIPTION	CHK	DATE	APPROVED

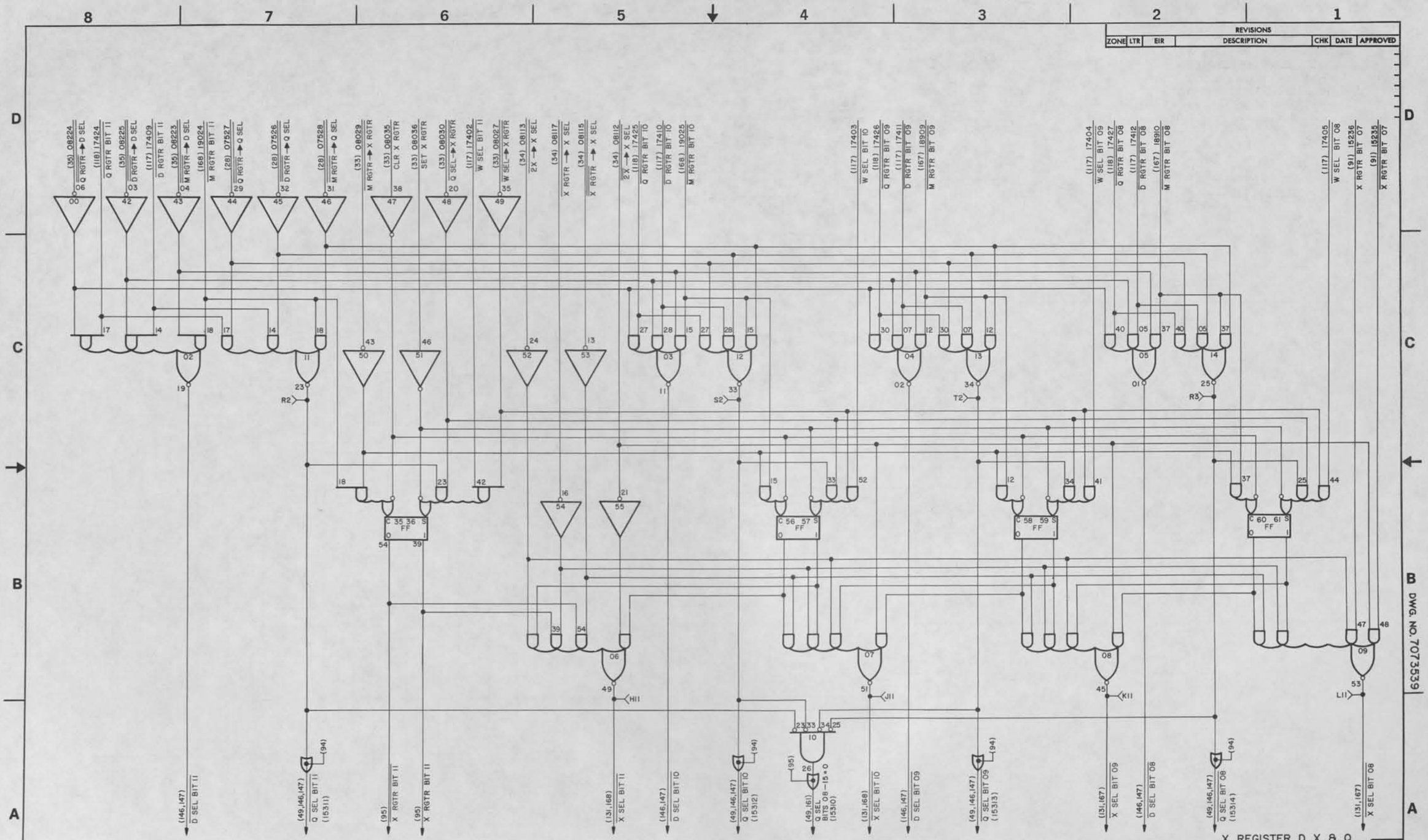

NOTE:
1. CARD TYPE-2015
2. CARD LOCATION-7IC

X REGISTER, D, X, & Q SELECTORS BITS 08-11

153

SIZE	CODE IDENT	DWG NO.
D	90536	7073539
SCALE	CLASS A	SHEET 93

DWG. NO. 7073539

UD 1-3534C

REVISIONS						
ZONE	LTR	EIR	DESCRIPTION	CHK	DATE	APPROVED
	CA	D06588	SEE EIR		12-15-72	

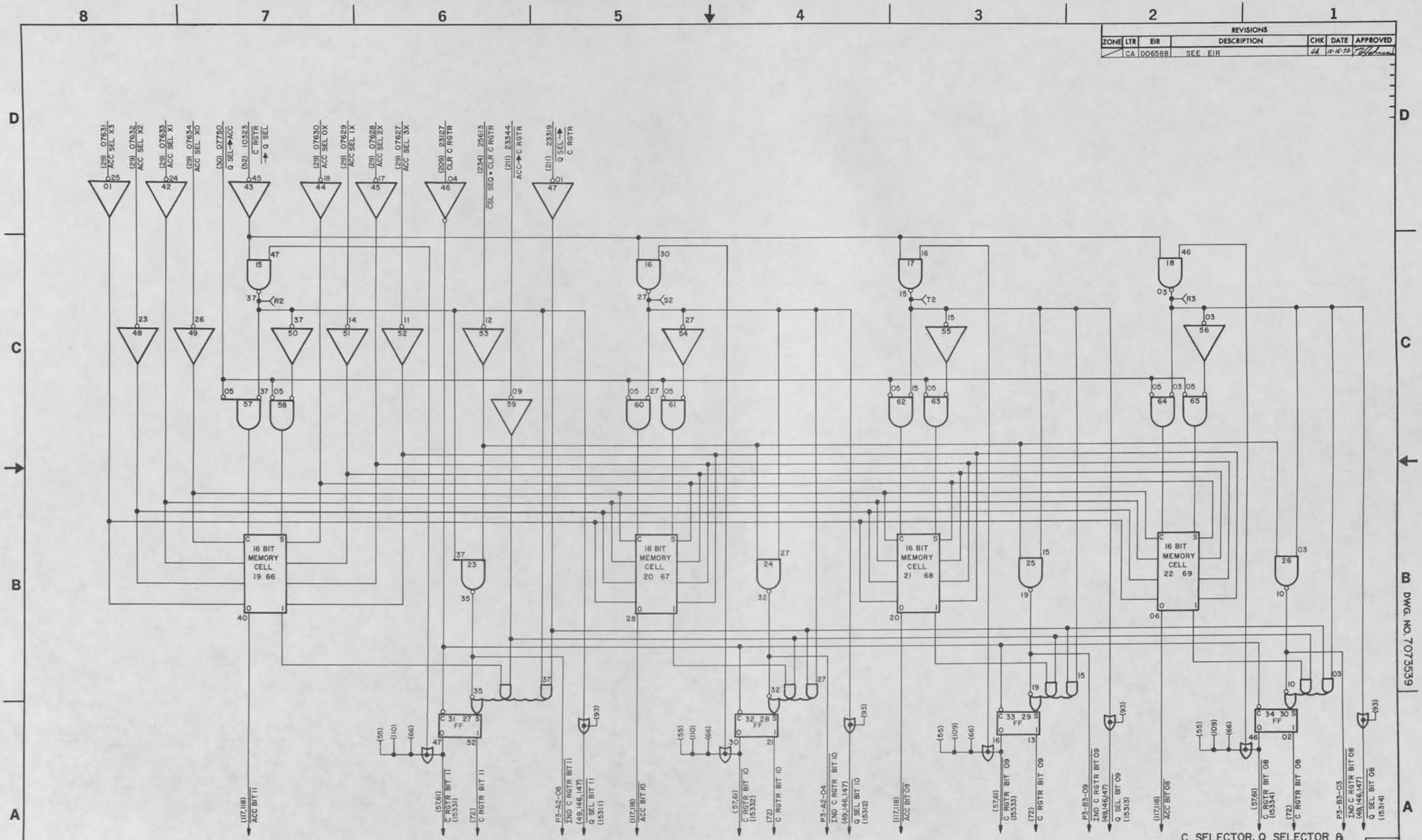

NOTES:
1. CARD TYPE — 1981
2. CARD LOCATION — 71B

C SELECTOR, Q SELECTOR & ACCUMULATOR BITS 08-11

153

SIZE	CODE IDENT	DWG NO.
D	90536	7073539
SCALE	CLASS A	SHEET 94

DWG. NO. 7073539

CHANGE 2

UD 1-8534C

REVISIONS						
ZONE	LTR	EIR	DESCRIPTION	CHK	DATE	APPROVED

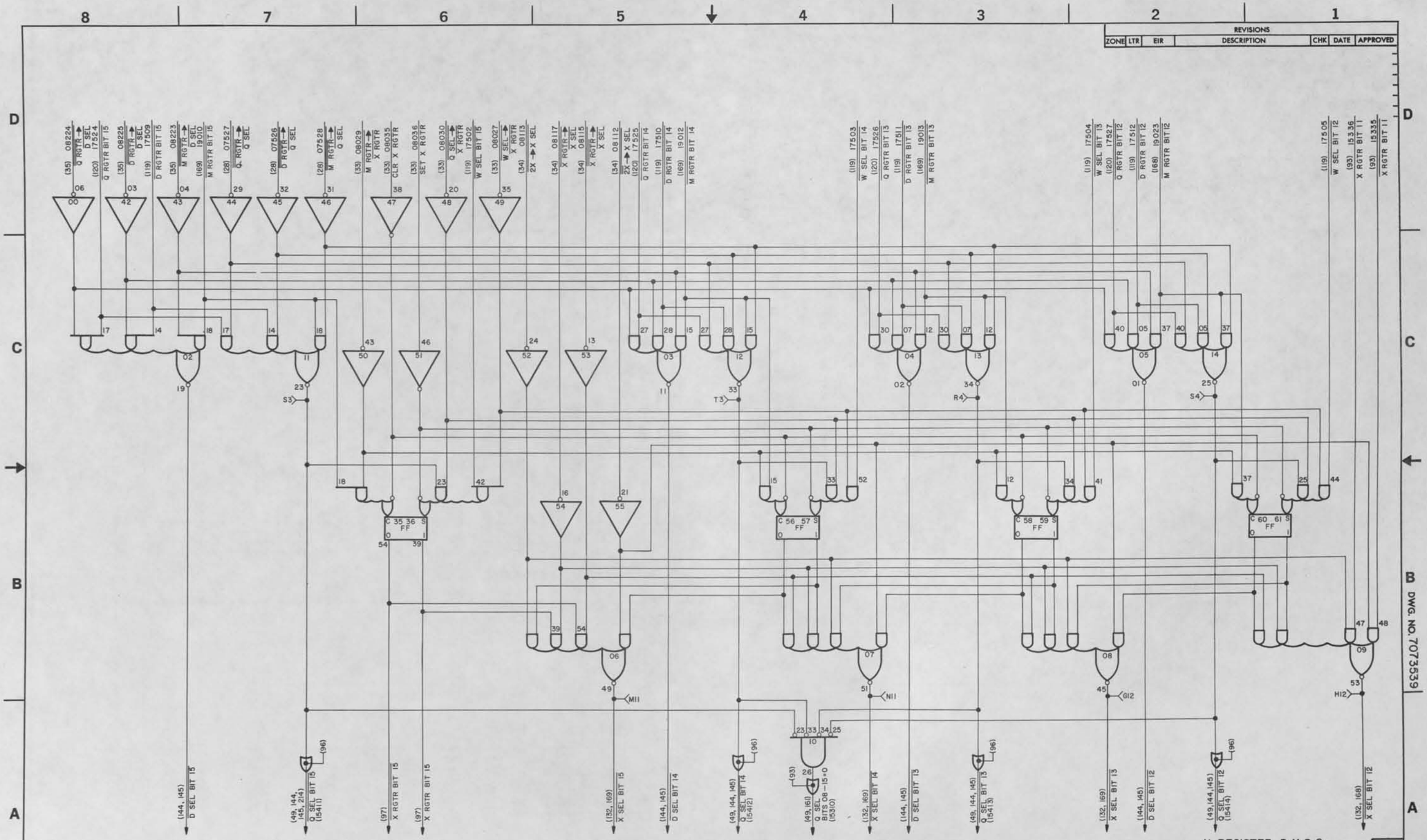

NOTE:
1. CARD TYPE-2015
2. CARD LOCATION-68C

X REGISTER, D, X & Q SELECTORS, BITS 12-15

154

SIZE	CODE IDENT	DWG NO.
D	90536	7073539

SCALE | CLASS A | SHEET 95

DWG. NO. 7073539

UD 1-2534C

REVISIONS						
ZONE	LTR	EIR	DESCRIPTION	CHK	DATE	APPROVED
	CA	006588	SEE EIR		12-15-72	

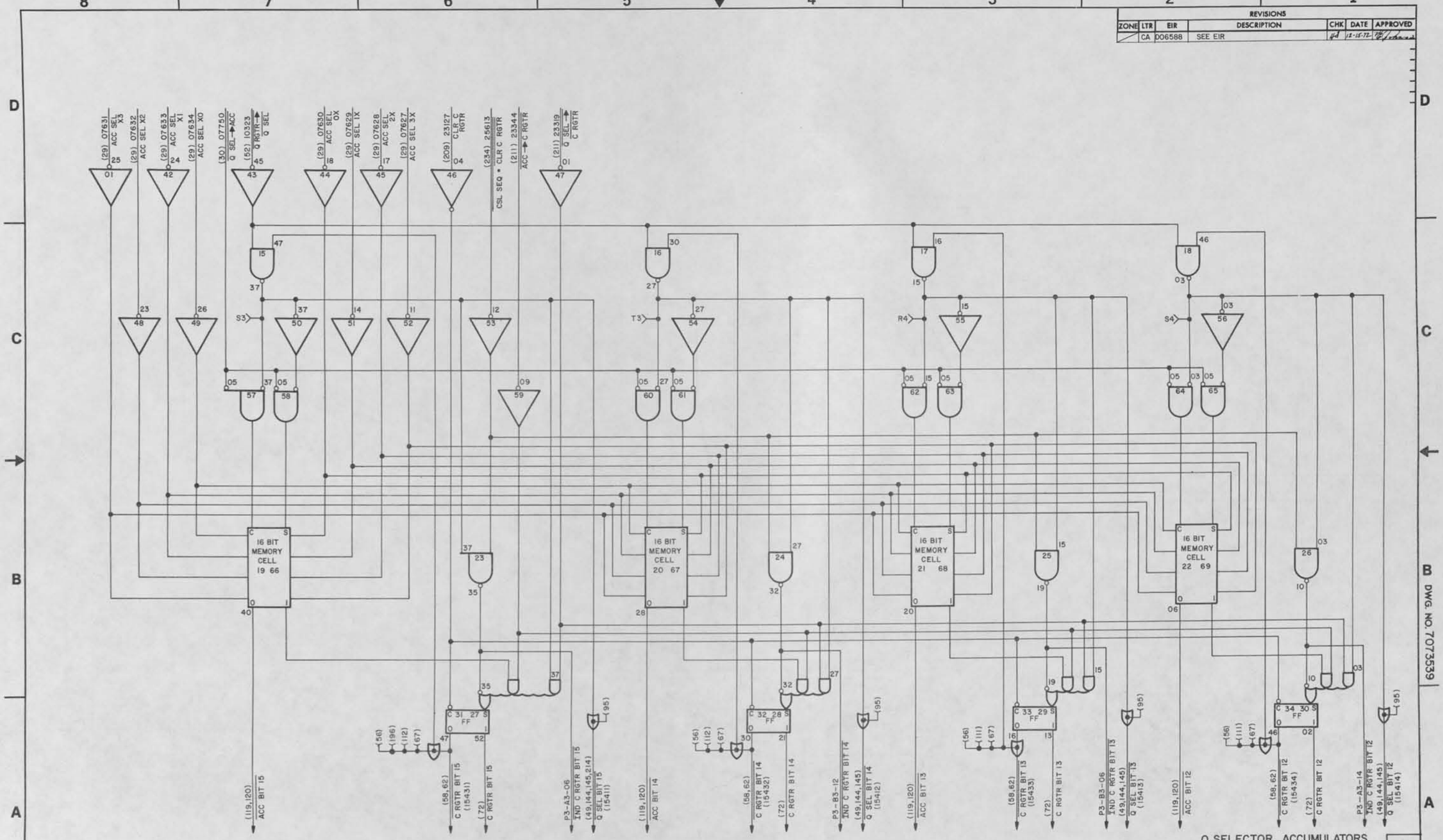

NOTES:
1. CARD TYPE — 1981
2. CARD LOCATION — 70B

Q SELECTOR, ACCUMULATORS & C SELECTOR, BITS 12 – 15

154

SIZE	CODE IDENT	DWG NO.
D	90536	7073539
SCALE	CLASS A	SHEET 96

DWG. NO. 7073539

CHANGE 2

UD 1-2534-C

ZONE	LTR	EIR	DESCRIPTION	CHK	DATE	APPROVED

REVISIONS

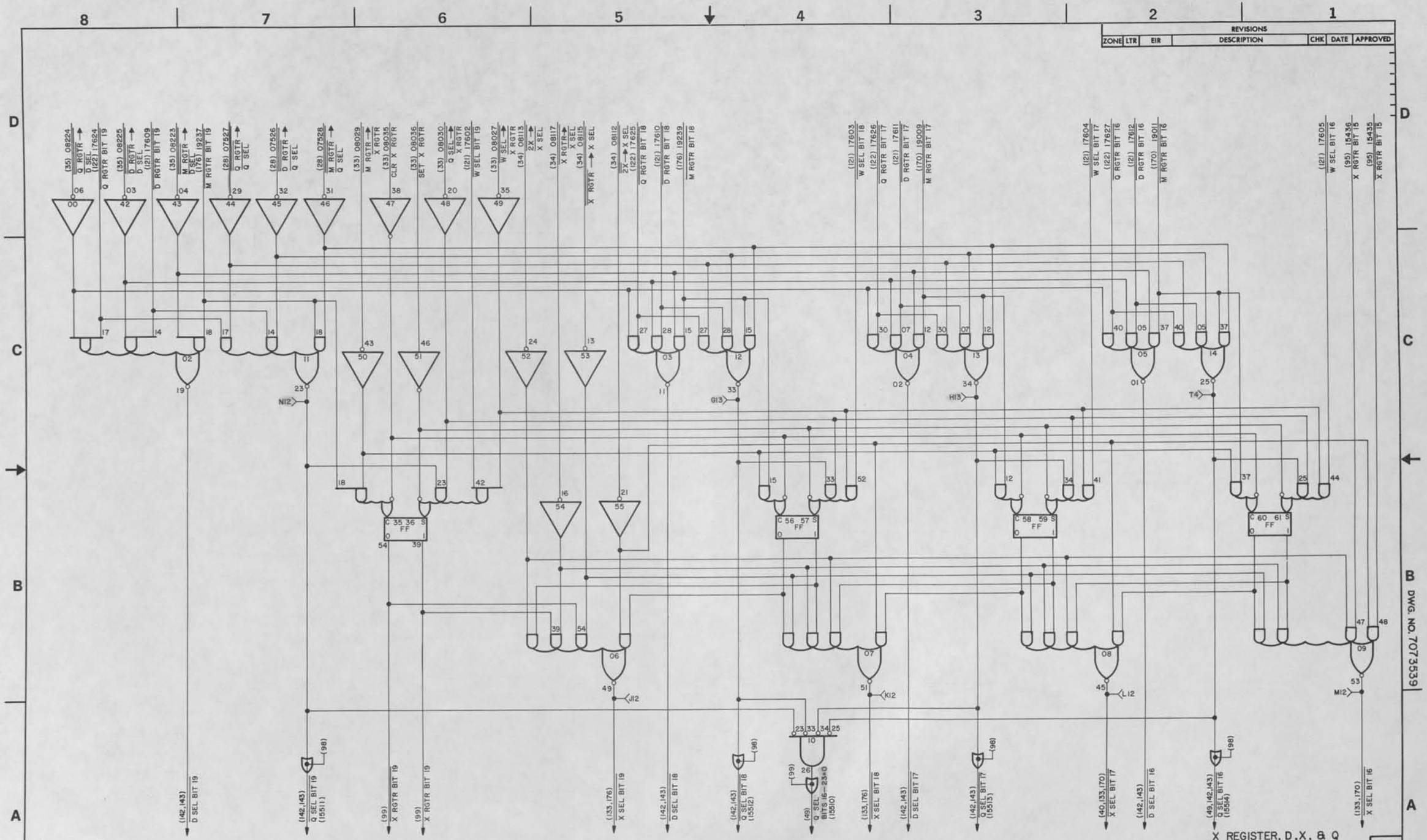

NOTE:
1. CARD TYPE-2015
2. CARD LOCATION-65C

X REGISTER, D, X, & Q SELECTORS BITS 16-19

155

SIZE	CODE IDENT	DWG NO.
D	90536	7073539
SCALE	CLASS A	SHEET 97

DWG. NO. 7073539

UD 1-8534C

REVISIONS						
ZONE	LTR	EIR	DESCRIPTION	CHK	DATE	APPROVED
	AJ	D05016	SEE EIR	RD	1-31-72	
	BU	D06551	SEE EIR	RD	2-18-72	
	CA	D06588	SEE EIR	RD	12-15-72	

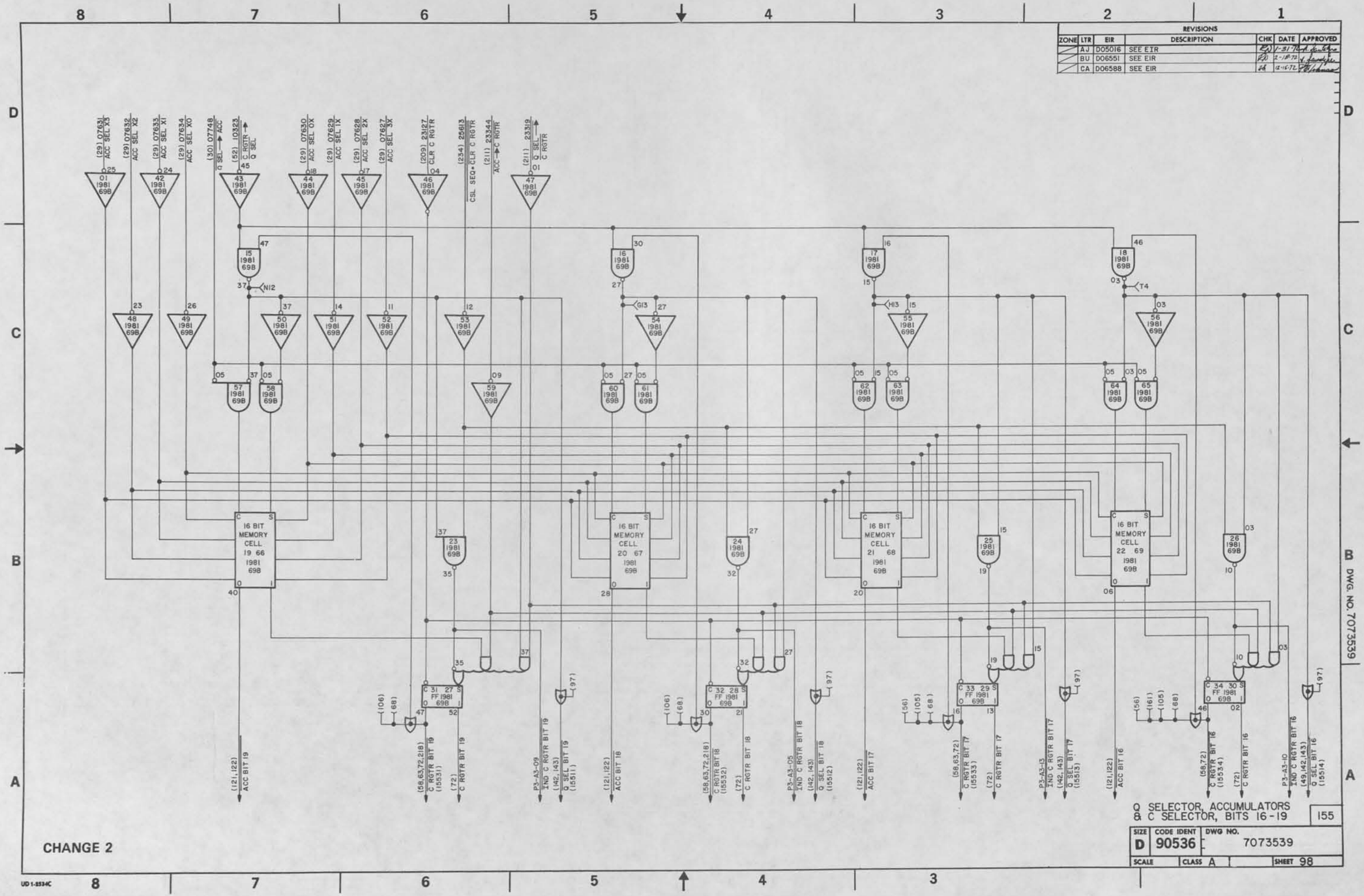

Q SELECTOR, ACCUMULATORS & C SELECTOR, BITS 16-19

155

CHANGE 2

SIZE	CODE IDENT	DWG NO.
D	90536	7073539
SCALE	CLASS A	SHEET 98

DWG. NO. 7073539

UD 1-2534C

REVISIONS						
ZONE	LTR	EIR	DESCRIPTION	CHK	DATE	APPROVED
	CA	D06588	SEE EIR		12-15-72	

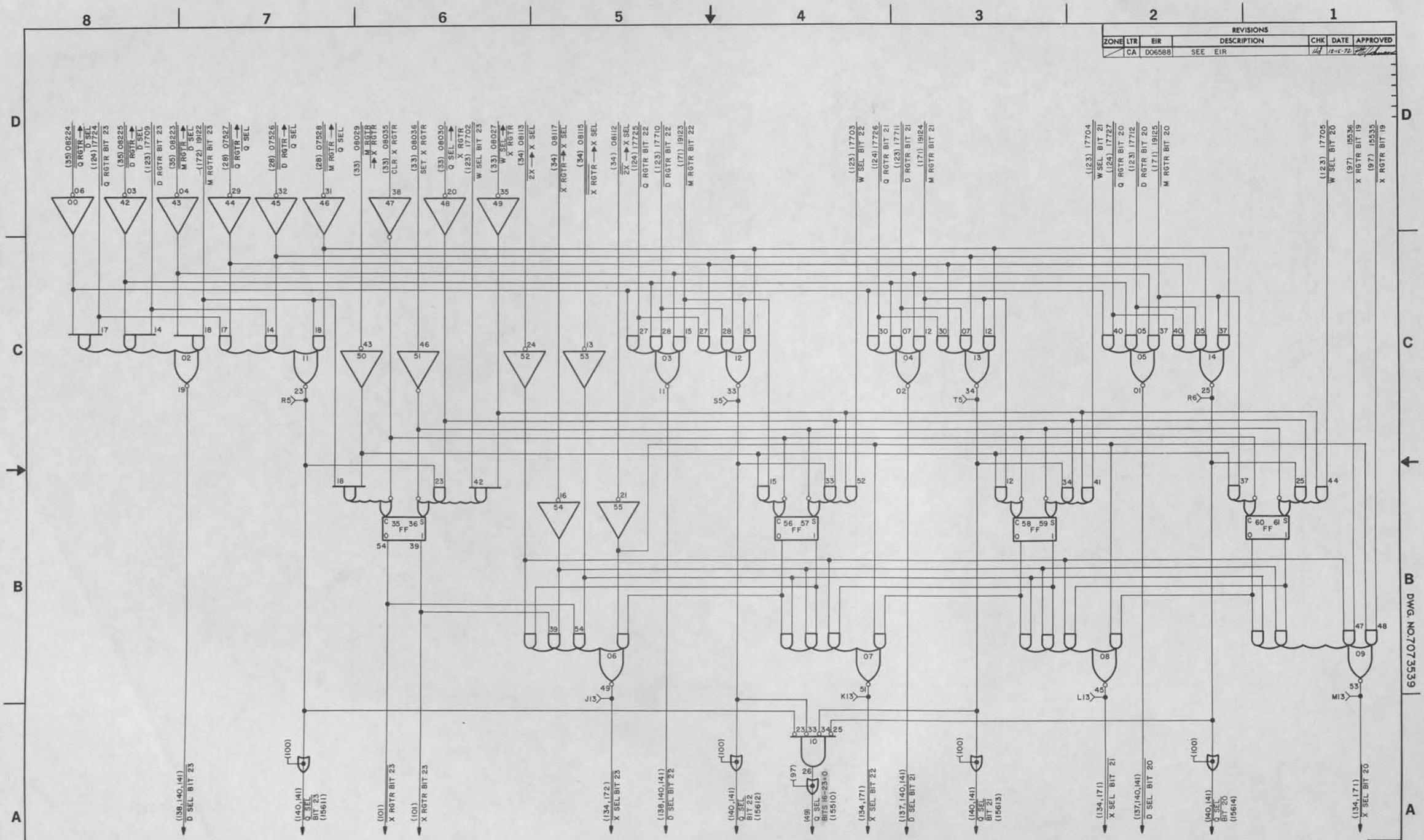

NOTE:
1. CARD TYPE – 2015
2. CARD LOCATION – 62C

X REGISTER, D, X & Q SELECTORS BITS 20–23.

156

SIZE	CODE IDENT	DWG NO.
D	90536	7073539
SCALE	CLASS A	SHEET 99

DWG. NO. 7073539

CHANGE 2

UD 1-8534C

REVISIONS						
ZONE	LTR	EIR	DESCRIPTION	CHK	DATE	APPROVED
	CA	D06588	SEE EIR		12-15-72	

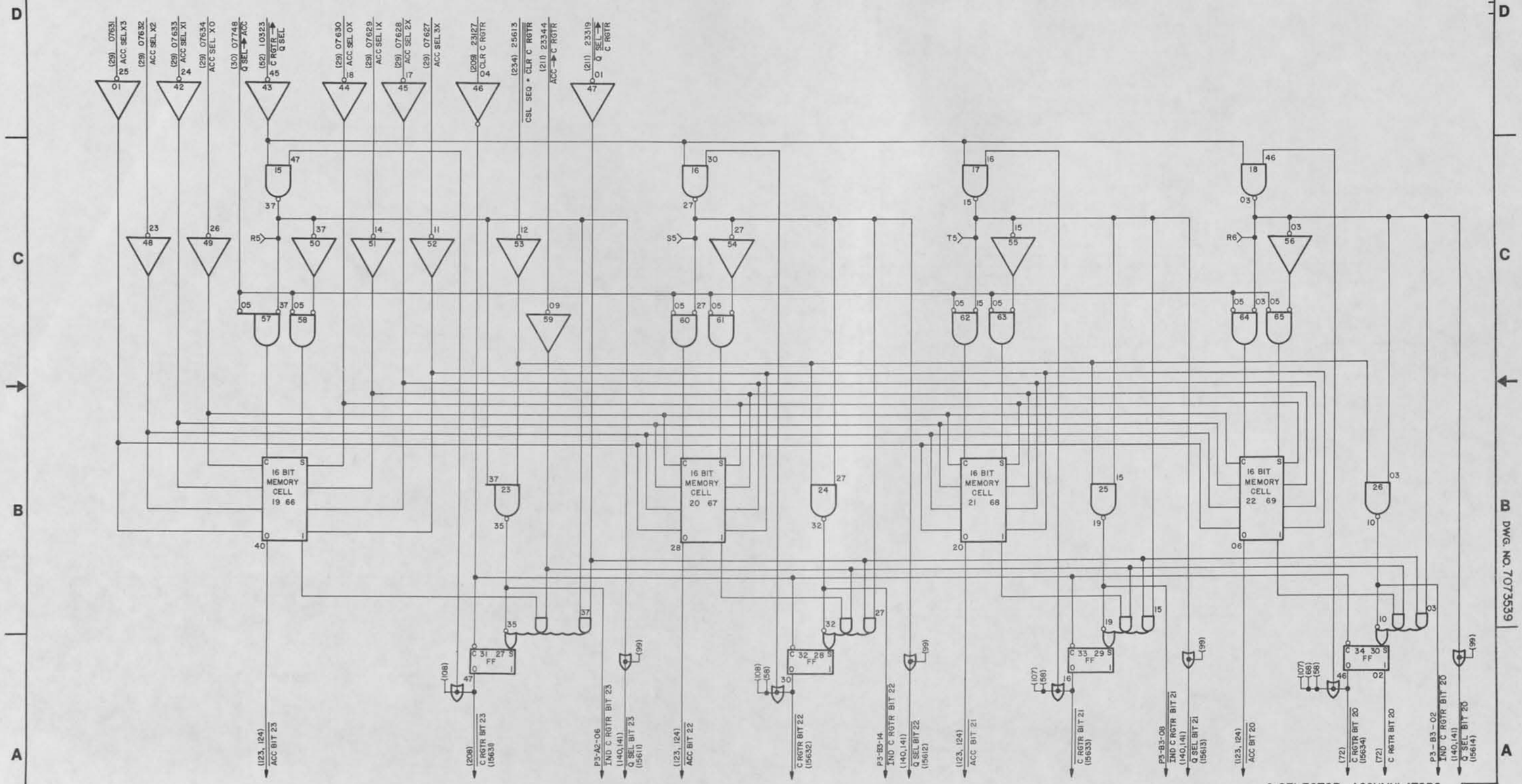

NOTES:
1. CARD TYPE — 1981
2. CARD LOCATION — 68 B

Q SELECTOR, ACCUMULATORS & C SELECTOR, BITS 20-23

156

SIZE	CODE IDENT	DWG NO.
D	90536	7073539
SCALE	CLASS A	SHEET 100

DWG. NO. 7073539

CHANGE 2

UD 1-2534C

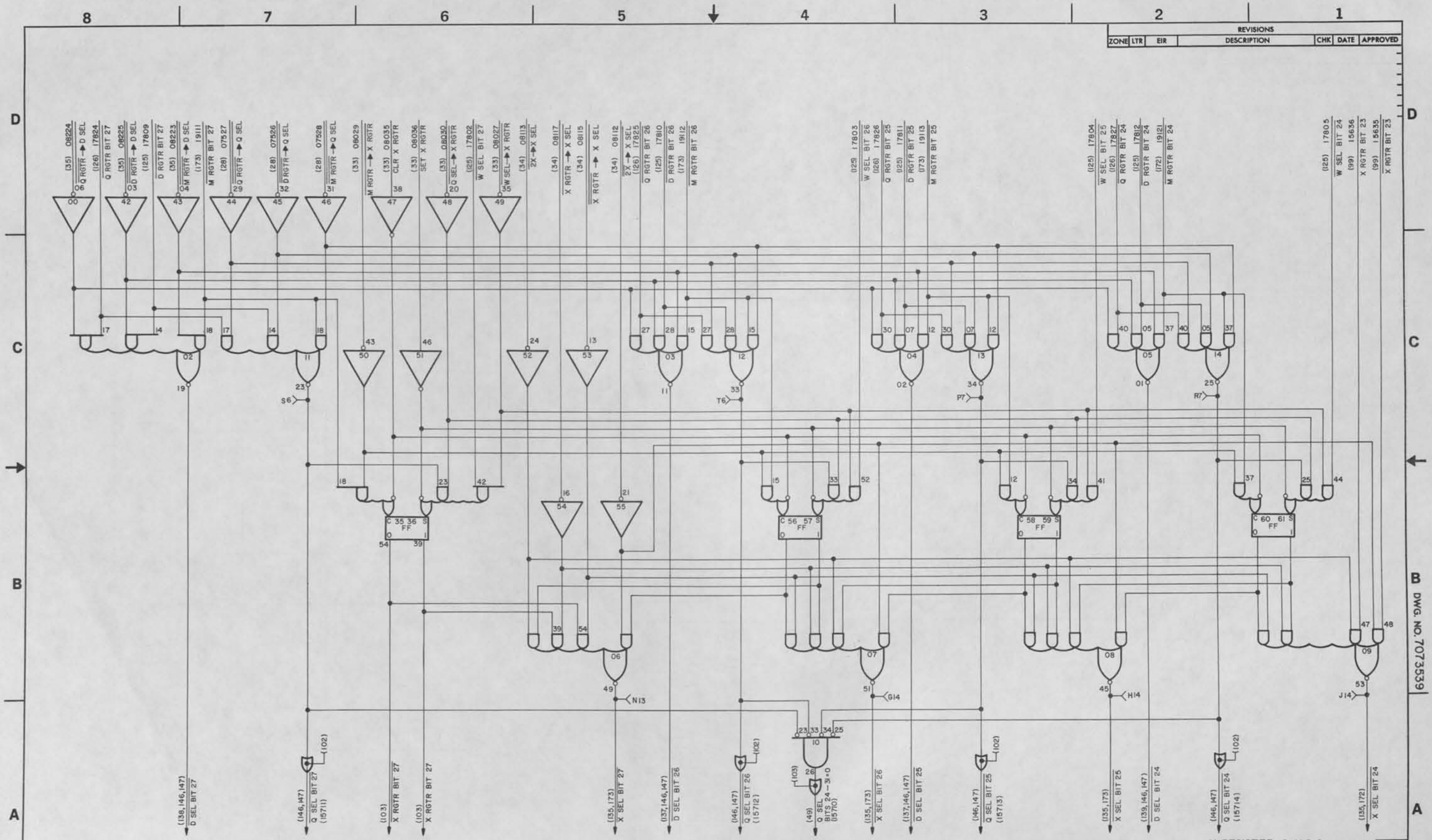

NOTE:
1. CARD TYPE-2015
2. CARD LOCATION-59C

REVISIONS						
ZONE	LTR	EIR	DESCRIPTION	CHK	DATE	APPROVED

X REGISTER, D, X & Q SELECTORS, BITS 24-27

157

SIZE	CODE IDENT	DWG NO.
D	90536	7073539
SCALE	CLASS A	SHEET 01

DWG. NO. 7073539

UD 1-2334C

REVISIONS						
ZONE	LTR	EIR	DESCRIPTION	CHK	DATE	APPROVED
	CA	D06588	SEE EIR		12-15-72	

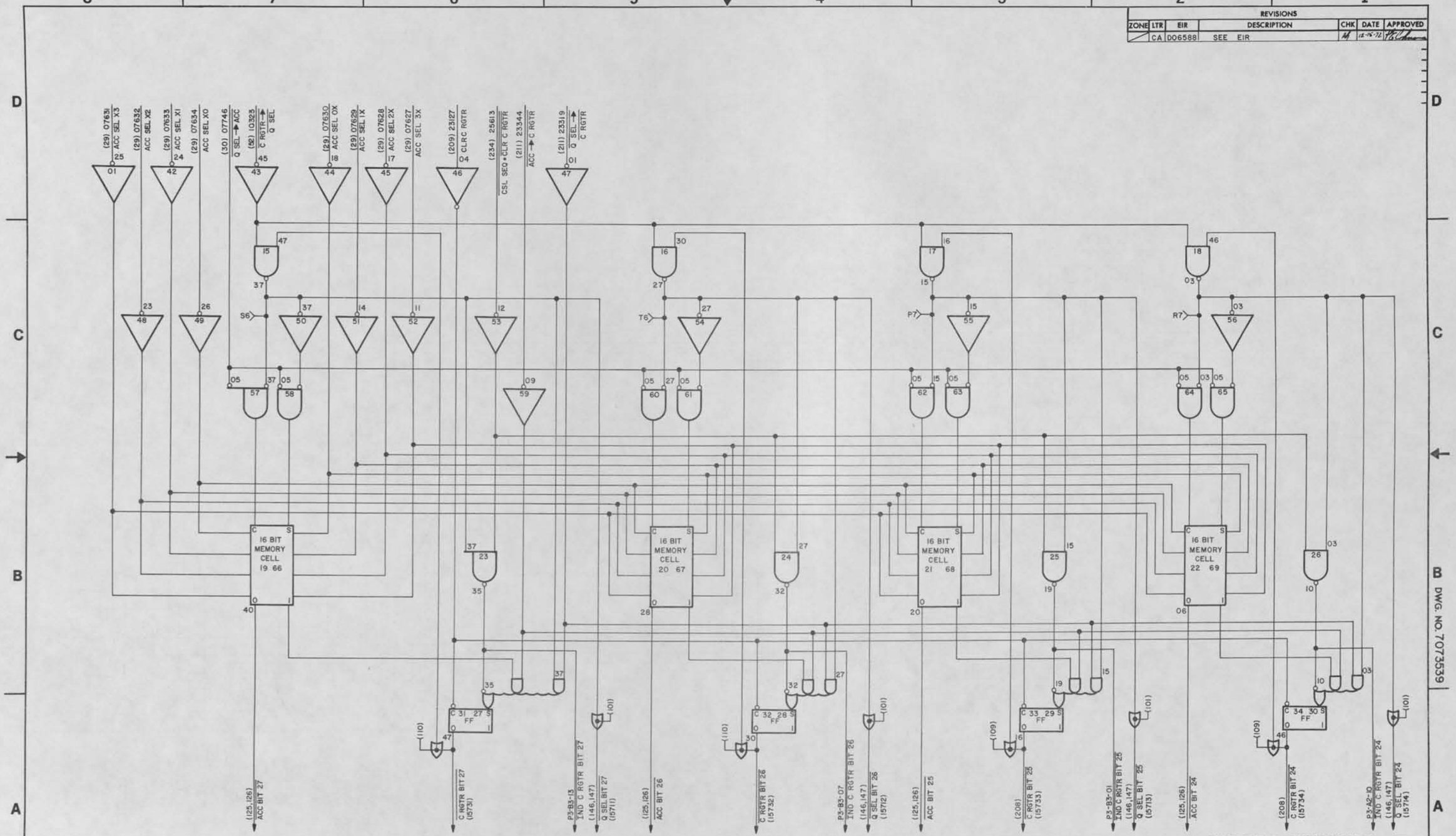

NOTES:
1. CARD TYPE — 1981
2. CARD LOCATION — 678

Q SELECTOR, ACCUMULATORS & C SELECTOR, BITS 24-27

157

SIZE	CODE IDENT	DWG NO.
D	90536	7073539
SCALE	CLASS A	SHEET 102

DWG. NO. 7073539

CHANGE 2

UD 1-8534C

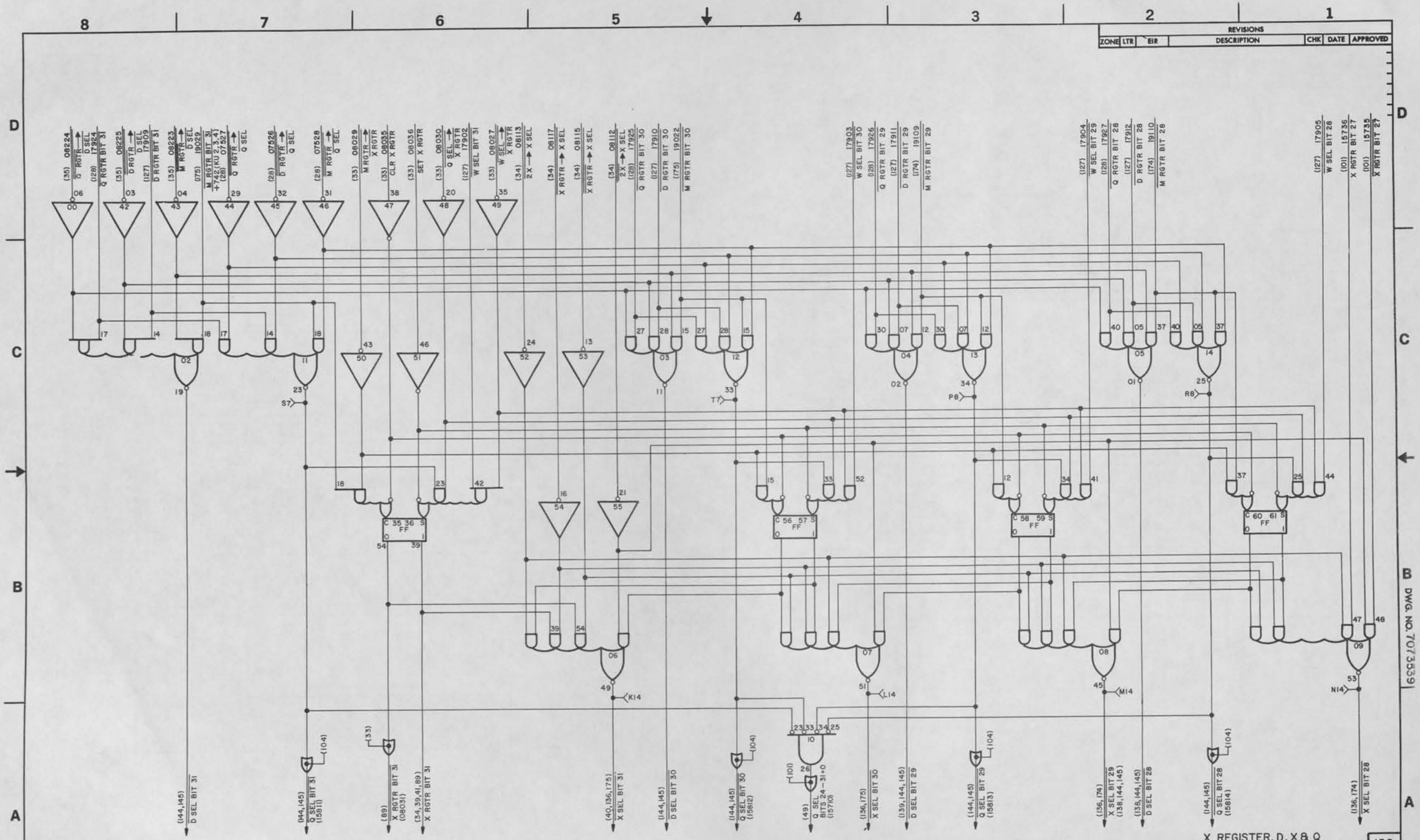
REVISIONS
ZONE LTR EIR DESCRIPTION CHK DATE APPROVED
DWG. NO. 7073539
X REGISTER, D, X & Q
SELECTORS, BITS 28-31
158
SIZE D
CODE IDENT 90536
DWG NO. 7073539
SCALE
CLASS A
SHEET 103
NOTE:
1. CARD TYPE-2015
2. CARD LOCATION-56C
UD 1-5534C

REVISIONS						
ZONE	LTR	EIR	DESCRIPTION	CHK	DATE	APPROVED
	CA	D06588	SEE EIR		12-15-72	

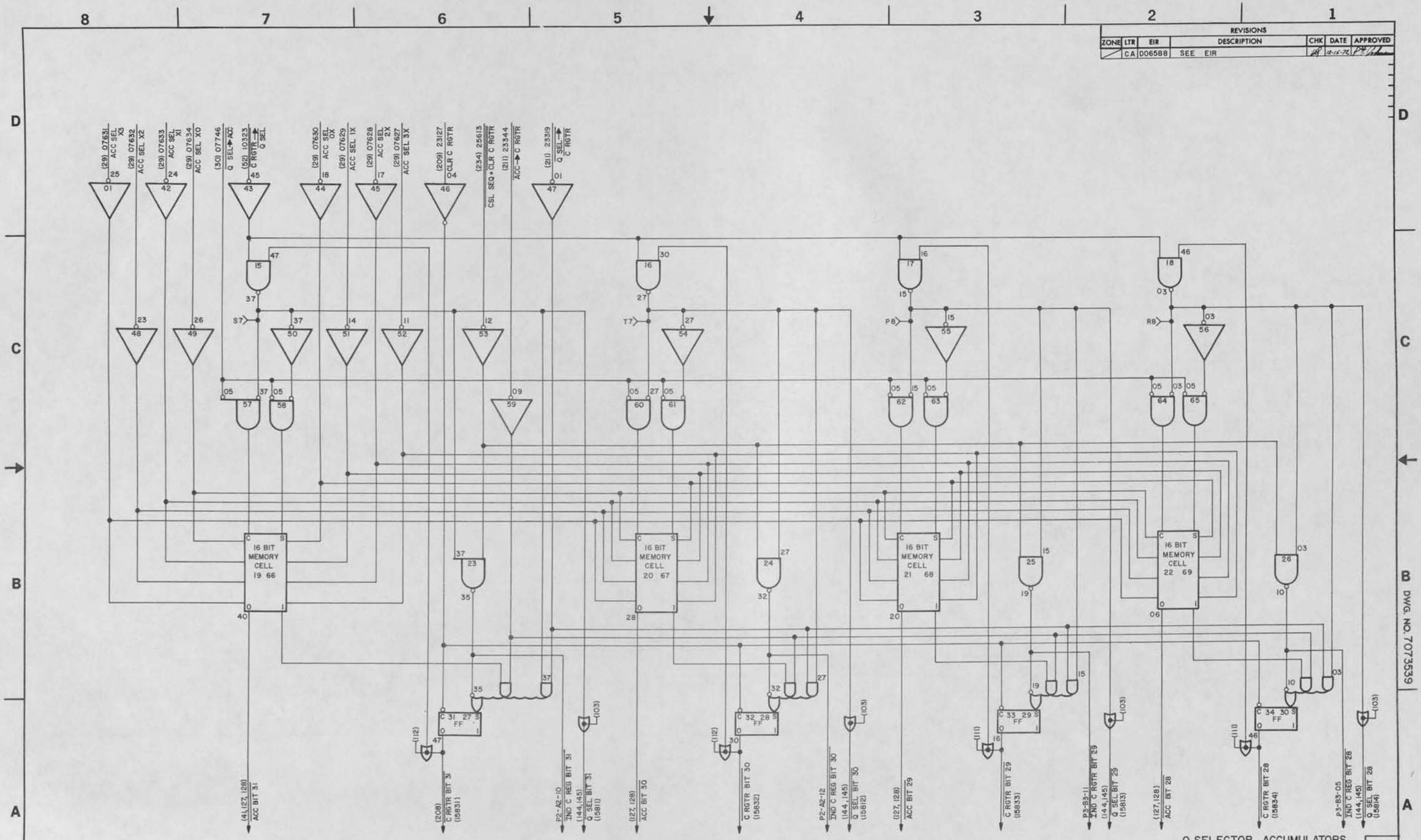

NOTES:
1. CARD TYPE — 1981
2. CARD LOCATION — 66B

CHANGE 2

Q SELECTOR, ACCUMULATORS & C SELECTOR, BITS 28-31

158

SIZE	CODE IDENT	DWG NO.
D	90536	7073539
SCALE	CLASS A	SHEET 04

DWG. NO. 7073539

UD 1-3534C

REVISIONS						
ZONE	LTR	EIR	DESCRIPTION	CHK	DATE	APPROVED
	Y	D03399	SEE EIR			
	BA	D05818	SEE EIR			
	CA	D06588	SEE EIR			

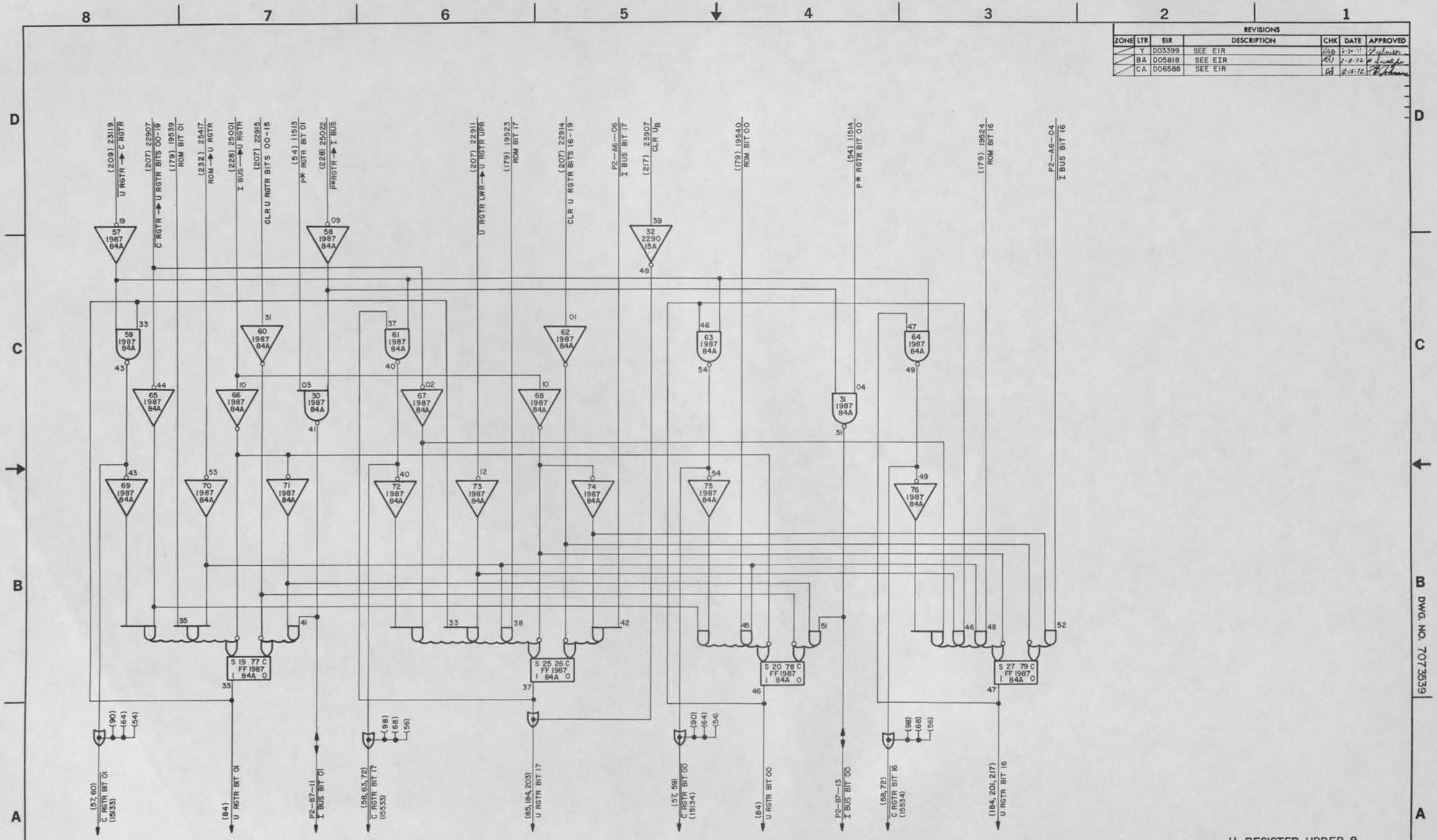

U REGISTER UPPER & LOWER BITS 00,01,16 & 17

170

SIZE	CODE IDENT	DWG NO.
D	90536	7073539
SCALE	CLASS A	SHEET 105

DWG. NO. 7073539

CHANGE 2

UD 1-8534C

REVISIONS						
ZONE	LTR	EIR	DESCRIPTION	CHK	DATE	APPROVED
	Y	D03399	SEE EIR			
	BA	D05818	SEE EIR			
	CA	D06588	SEE EIR			
	CK	D09611	SEE EIR			

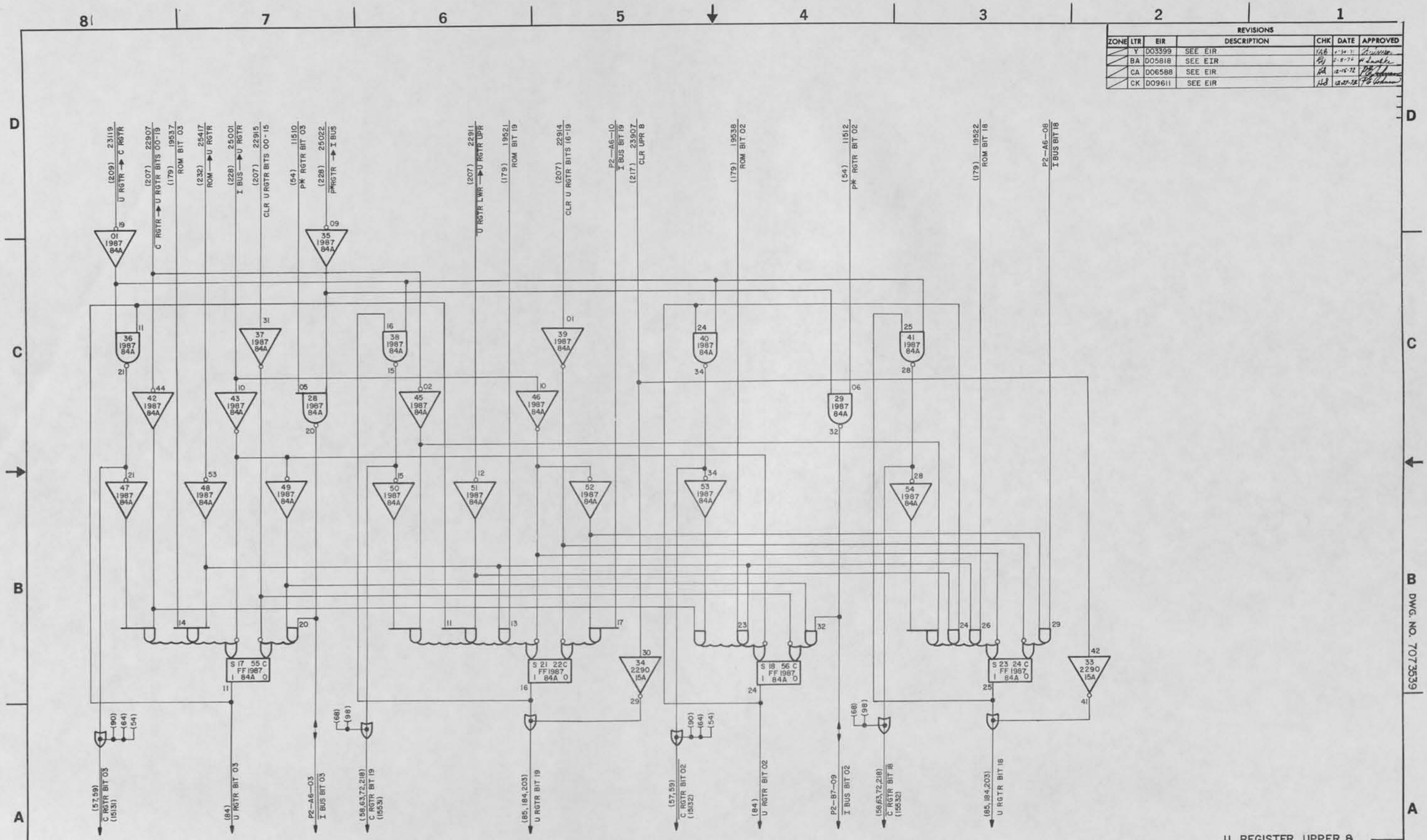

U REGISTER UPPER & LOWER BITS 02,03,18 & 19

170

SIZE	CODE IDENT	DWG NO.
D	90536	7073539
SCALE	CLASS A	SHEET 06

DWG. NO. 7073539

CHANGE 2

UD 1-8534C

REVISIONS						
ZONE	LTR	EIR	DESCRIPTION	CHK	DATE	APPROVED
	Y	D03399	SEE EIR			
	BA	D05818	SEE EIR			
	CA	D06588	SEE EIR			

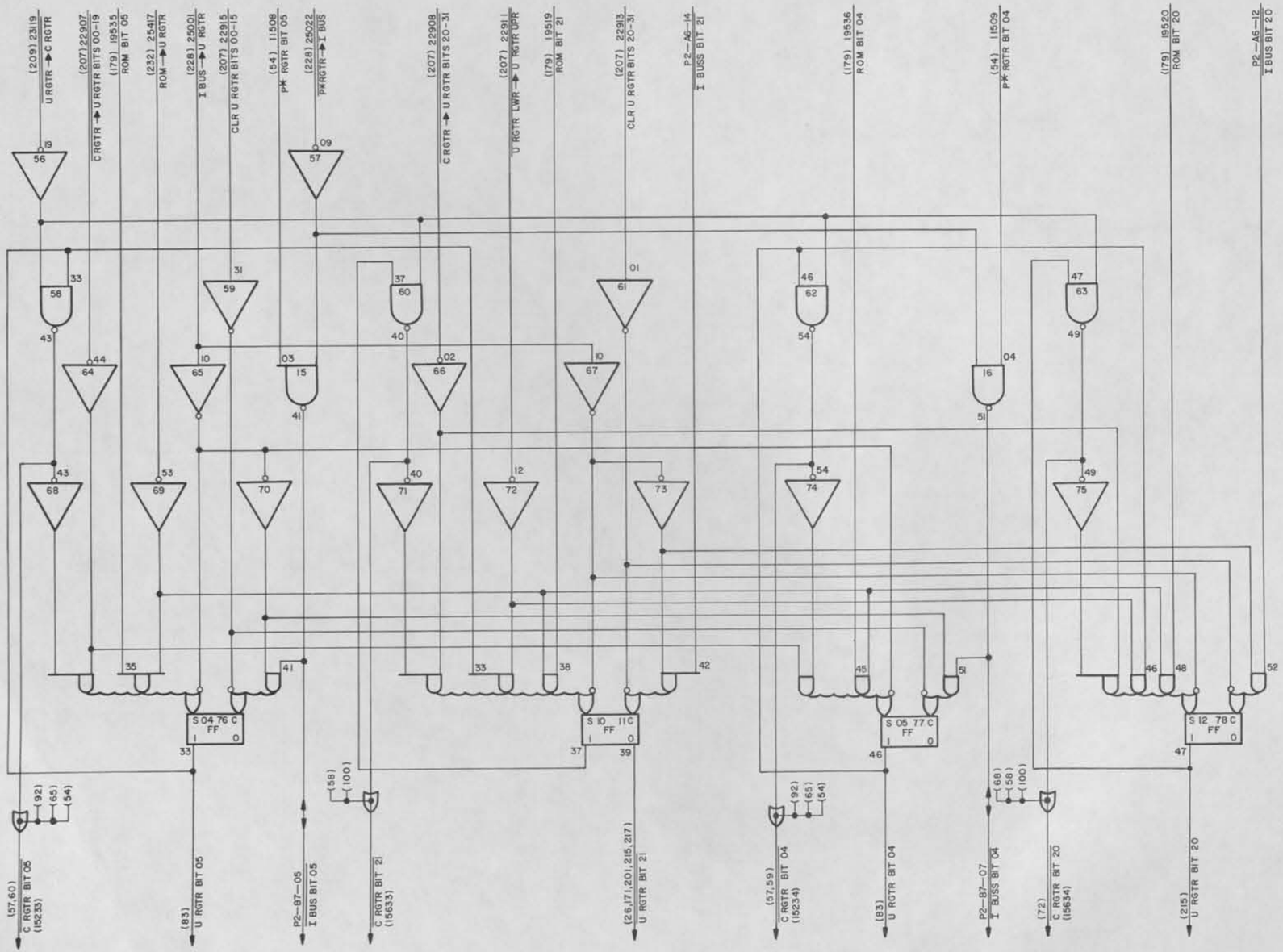

NOTES:
1. CARD TYPE—1987
2. CARD LOCATION—83A

U REGISTER UPPER & LOWER BITS 04,05,20&21

170

SIZE	CODE IDENT	DWG NO.
D	90536	7073539
SCALE	CLASS A	SHEET 107

DWG. NO. 7073539

CHANGE 2

UD 1-3534C

REVISIONS						
ZONE	LTR	EIR	DESCRIPTION	CHK	DATE	APPROVED
	Y	D03399	SEE EIR		1-30-71	
	BA	D05818	SEE EIR		2-8-72	
	CA	D06588	SEE EIR	HR	12-15-72	

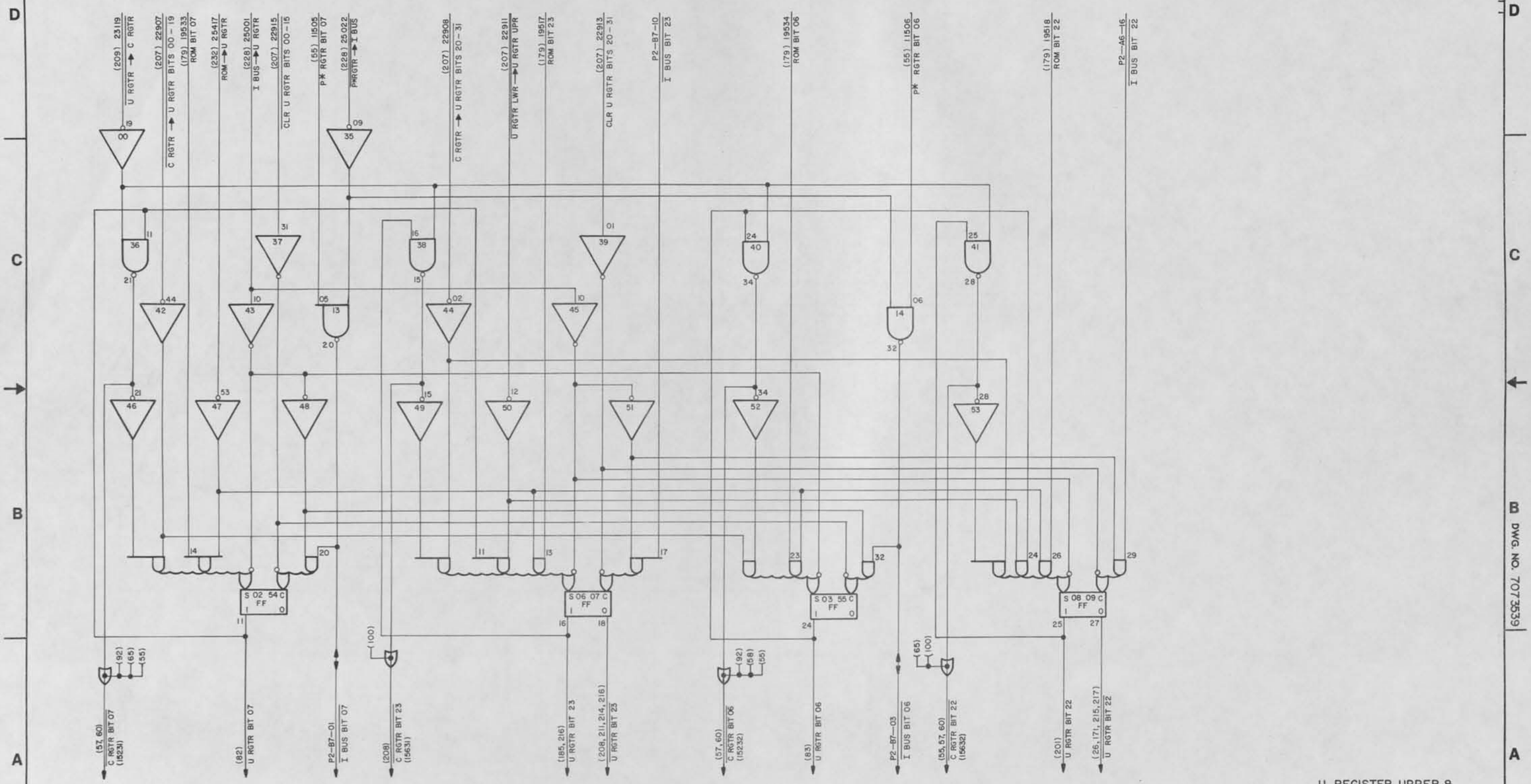

NOTES:
1. CARD TYPE — 1987
2. CARD LOCATION — 83A

CHANGE 2

U REGISTER UPPER & LOWER BITS 06, 07, 22 & 23 | 170

SIZE	CODE IDENT	DWG NO.
D	90536	7073539
SCALE	CLASS A	SHEET 108

DWG. NO. 7073539

UD 1-8534C

REVISIONS						
ZONE	LTR	EIR	DESCRIPTION	CHK	DATE	APPROVED
	Y	D03399	SEE EIR		6-30-71	
	BA	D05818	SEE EIR		1-8-72	
	CA	D06588	SEE EIR		12-15-72	

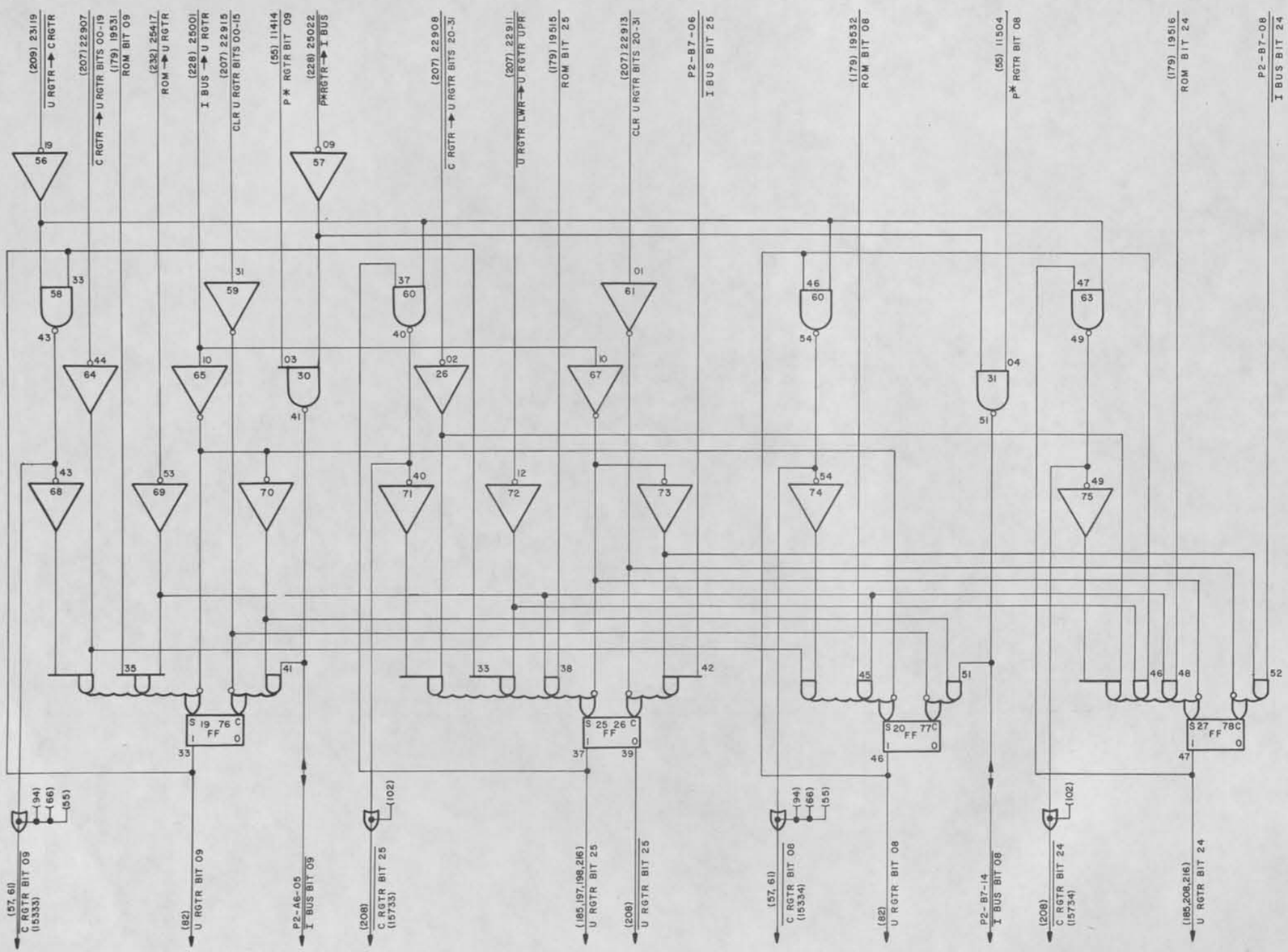

NOTES:
1. CARD TYPE - 1987
2. CARD LOCATION - 82A

U REGISTER UPPER & LOWER, BITS 08, 09, 24 & 25

171

SIZE	CODE IDENT	DWG NO.
D	90536	7073539
SCALE	CLASS A	SHEET 109

DWG. NO. 7073539

CHANGE 2

UD 1-2534C

REVISIONS						
ZONE	LTR	EIR	DESCRIPTION	CHK	DATE	APPROVED
	Y	D03399	SEE EIR		6-30-71	
	BA	D05818	SEE EIR		4-8-72	
	CA	D06588	SEE EIR		12-15-72	

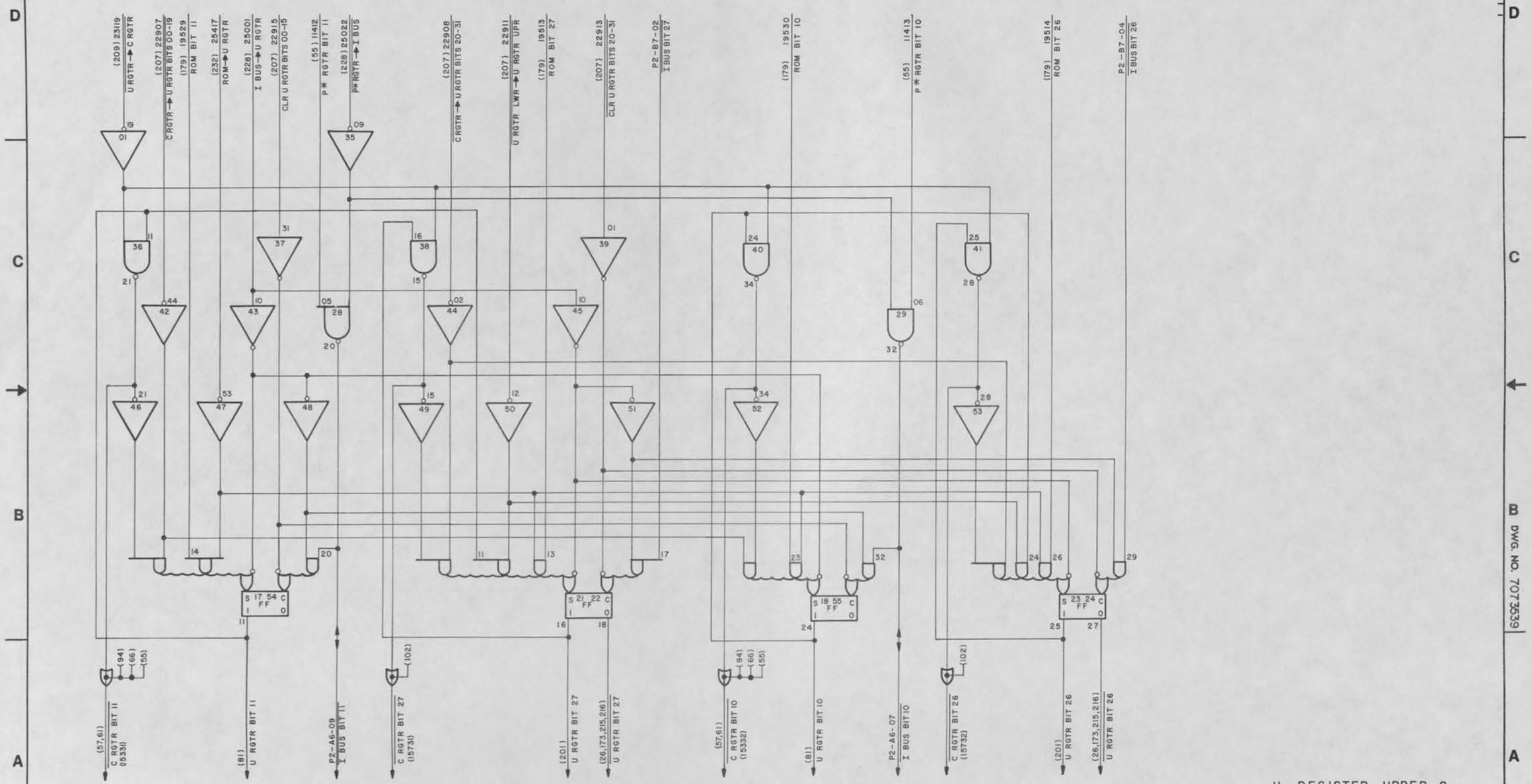

NOTES:
1. CARD TYPE - 1987
2. CARD LOCATION - 82A

U REGISTER UPPER & LOWER, BITS 10,11,26 & 27

171

SIZE	CODE IDENT	DWG NO.
D	90536	7073539
SCALE	CLASS A	SHEET 110

DWG. NO. 7073539

CHANGE 2

UD 1-8534C

REVISIONS						
ZONE	LTR	EIR	DESCRIPTION	CHK	DATE	APPROVED
	Y	D03399	SEE EIR	KAB	4-30-71	[illegible]
	BA	D05818	SEE EIR	FJ	1-8-72	[illegible]
	CA	D06588	SEE EIR	HH	12-15-72	[illegible]

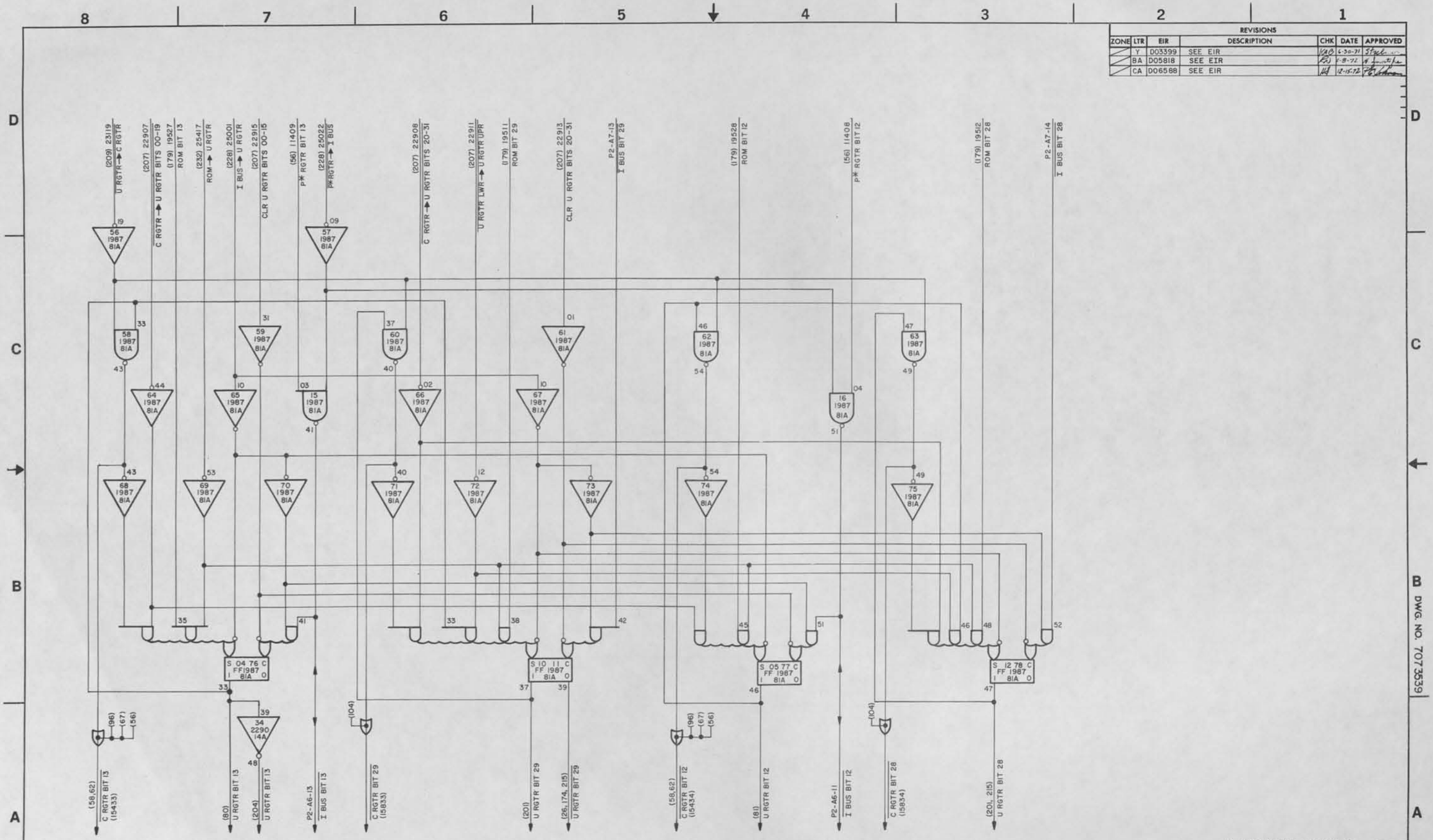

U REGISTER UPPER & LOWER BITS 12,13,28 & 29

171

SIZE	CODE IDENT	DWG NO.
D	90536	7073539
SCALE	CLASS A	SHEET 11

DWG. NO. 7073539

CHANGE 2

UD 1-8534C

REVISIONS						
ZONE	LTR	EIR	DESCRIPTION	CHK	DATE	APPROVED
	Y	D03399	SEE EIR	RJB	6-30-71	[illegible]
	AH	D04915	SEE EIR	RJ	1-28-72	[illegible]
	BA	D05818	SEE EIR	RJ	2-8-72	[illegible]
	CA	D06588	SEE EIR	RA	12-15-72	[illegible]

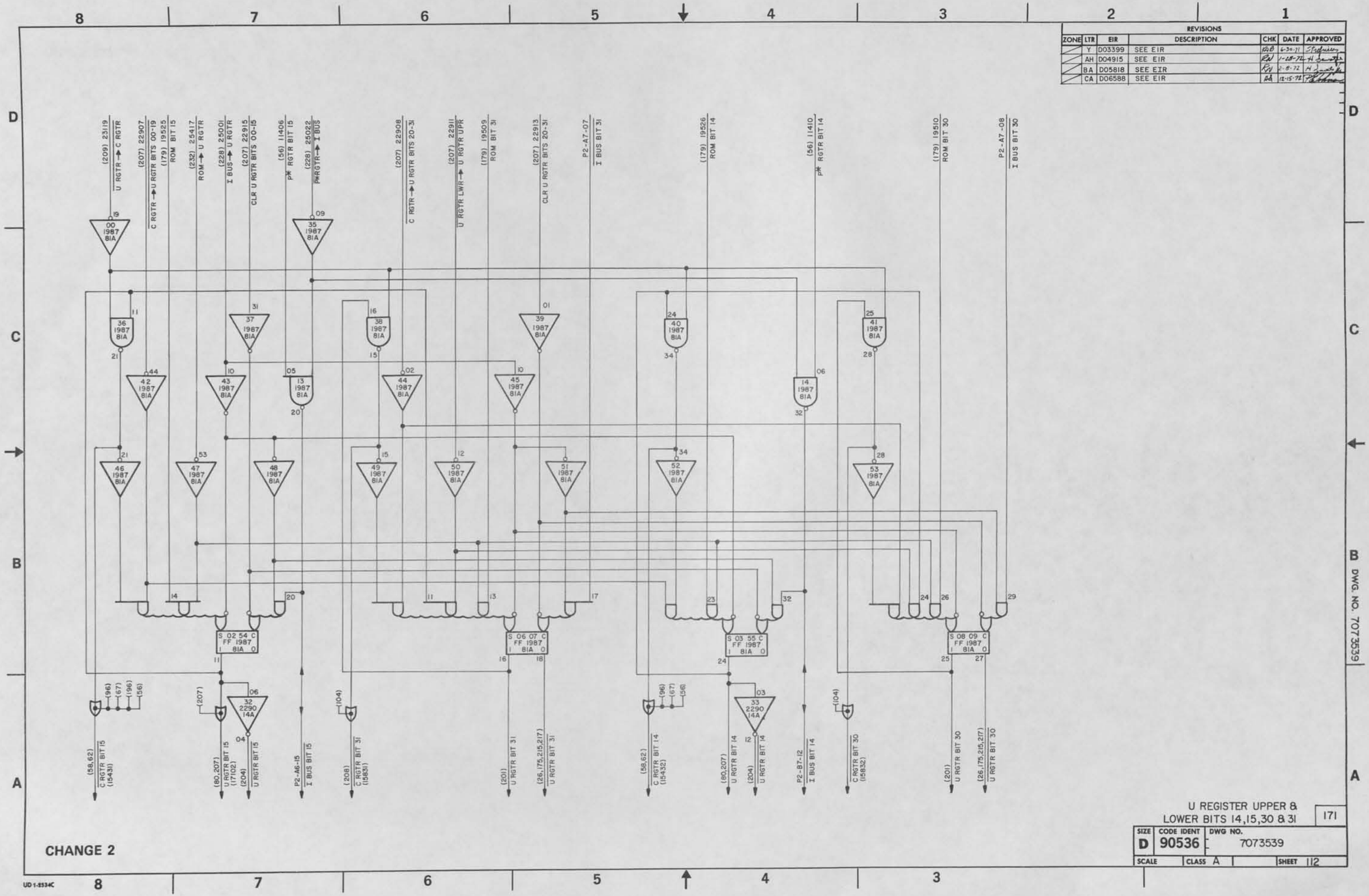

CHANGE 2

U REGISTER UPPER & LOWER BITS 14,15,30 & 31

171

SIZE	CODE IDENT	DWG NO.
D	90536	7073539
SCALE	CLASS A	SHEET 112

DWG. NO. 7073539

UD 1-8534C

REVISIONS						
ZONE	LTR	EIR	DESCRIPTION	CHK	DATE	APPROVED
	BH	D06500	SEE EIR		8-10-72	
	CA	D06588	SEE EIR		12-15-72	

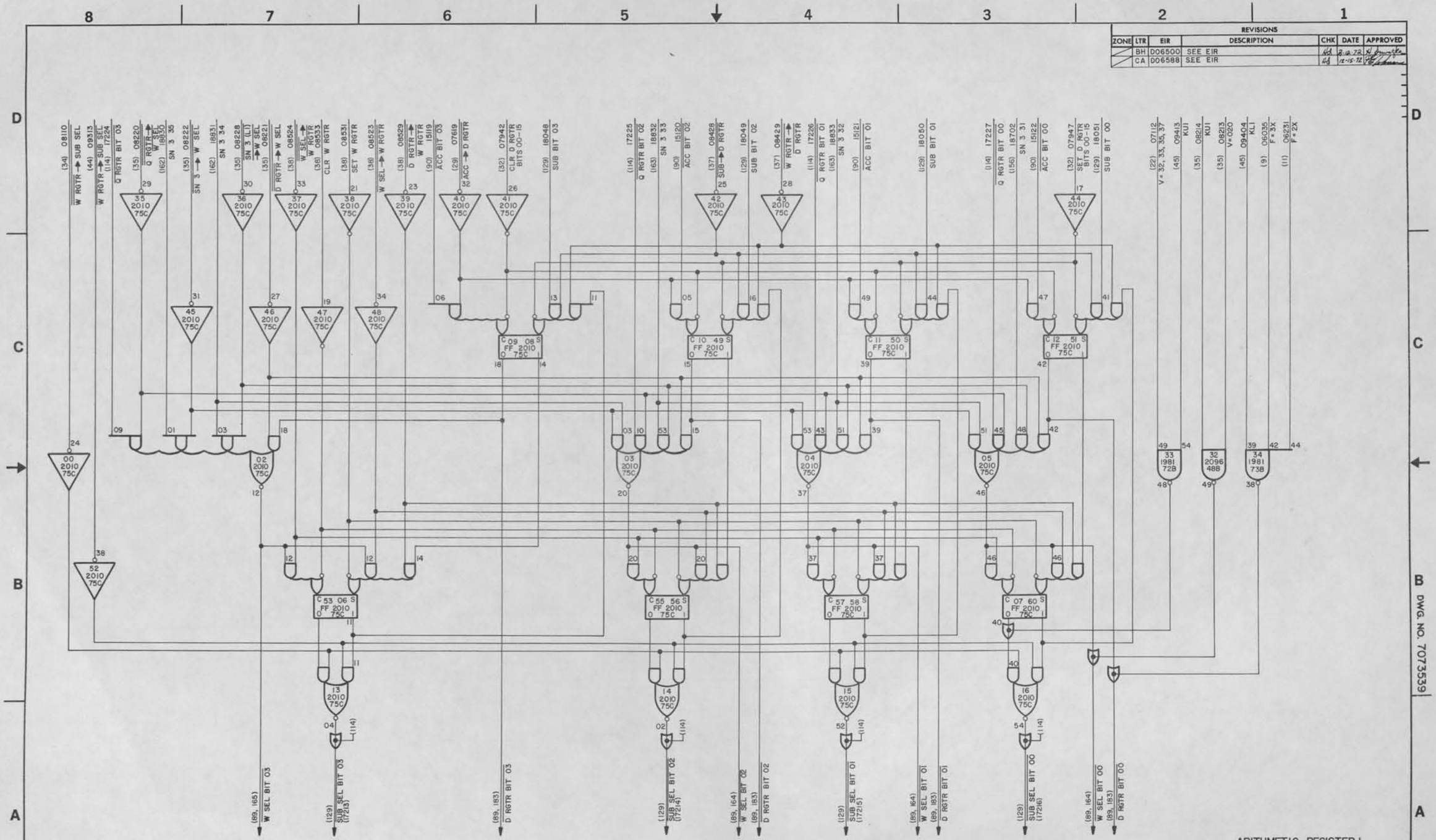

ARITHMETIC REGISTER I, BITS 00-03 (PART I) 172

SIZE	CODE IDENT	DWG NO.
D	90536	7073539
SCALE	CLASS A	SHEET 113

DWG. NO. 7073539

CHANGE 2

UD 1-3534C

REVISIONS						
ZONE	LTR	EIR	DESCRIPTION	CHK	DATE	APPROVED

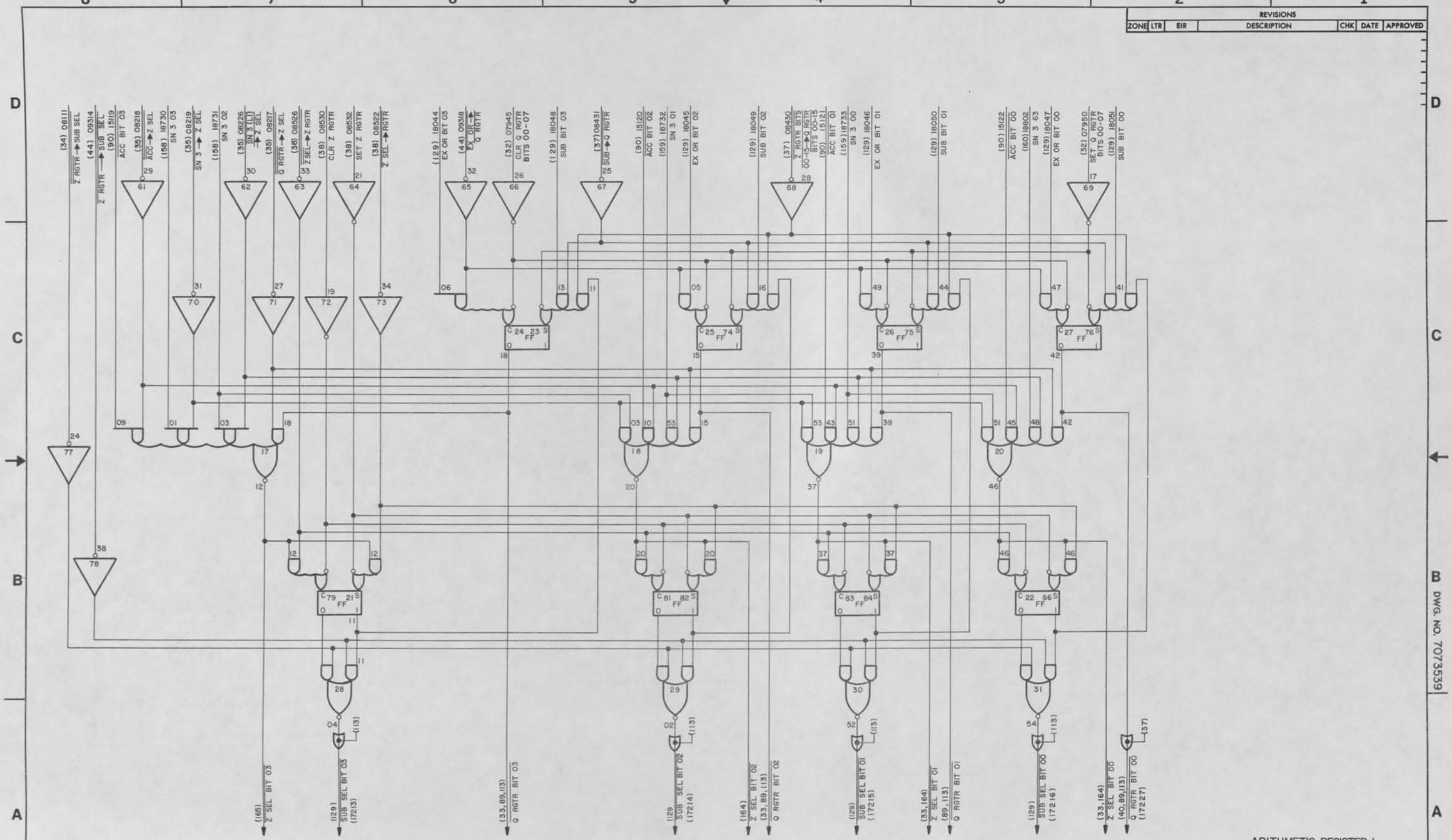

NOTES:
1. CARD TYPE - 2010
2. CARD LOCATION - 76C

ARITHMETIC REGISTER I, BITS 00-03 (PART 2) 172

SIZE	CODE IDENT	DWG NO.
D	90536	7073539
SCALE	CLASS A	SHEET 114

DWG. NO. 7073539

UD 1-8534C

REVISIONS						
ZONE	LTR	EIR	DESCRIPTION	CHK	DATE	APPROVED

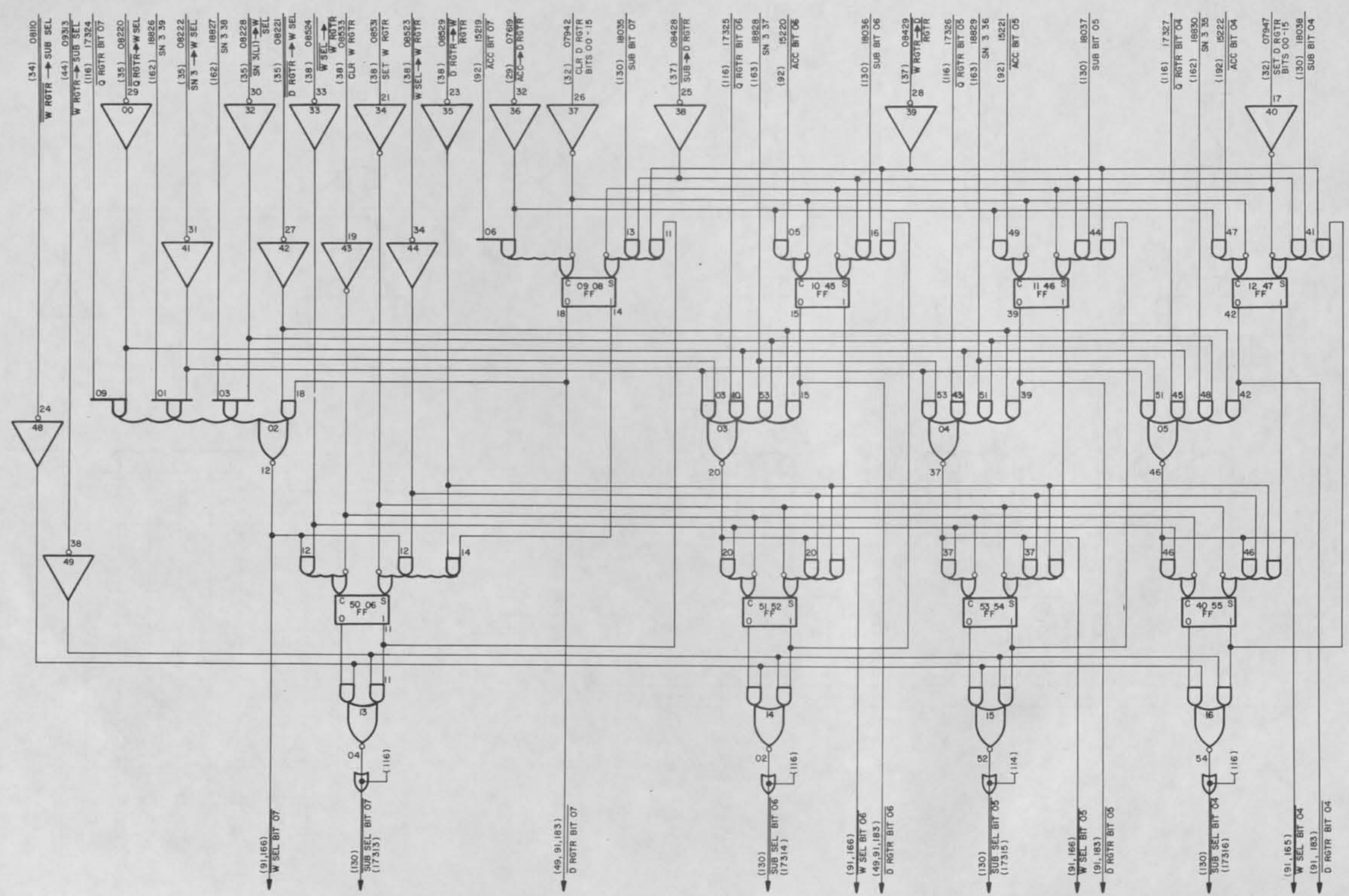

NOTES:
1. CARD TYPE-2010
2. CARD LOCATION-72C

ARITHMETIC REGISTER 1, BITS 04–07 (PART 1)

173

SIZE	CODE IDENT	DWG NO.
D	90536	7073539
SCALE	CLASS A	SHEET 15

DWG. NO. 7073539

UD 1-8534C

REVISIONS						
ZONE	LTR	EIR	DESCRIPTION	CHK	DATE	APPROVED

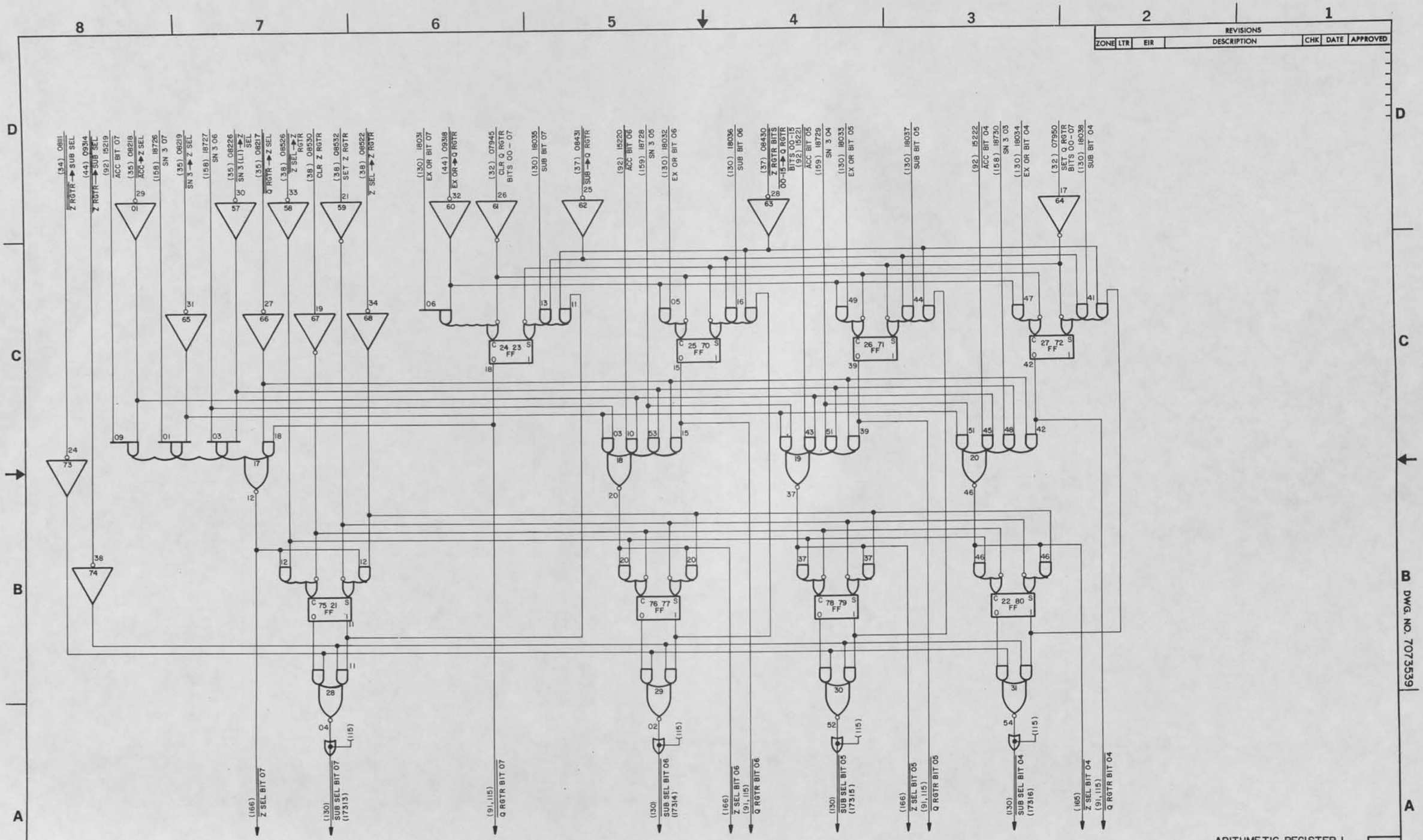

NOTES:
1. CARD TYPE-2010
2. CARD LOCATION-73C

ARITHMETIC REGISTER 1, BITS 04–07 (PART 2) 173

SIZE	CODE IDENT	DWG NO.
D	90536	7073539
SCALE	CLASS A	SHEET 116

DWG. NO. 7073539

UD 1-8534C

REVISIONS						
ZONE	LTR	EIR	DESCRIPTION	CHK	DATE	APPROVED

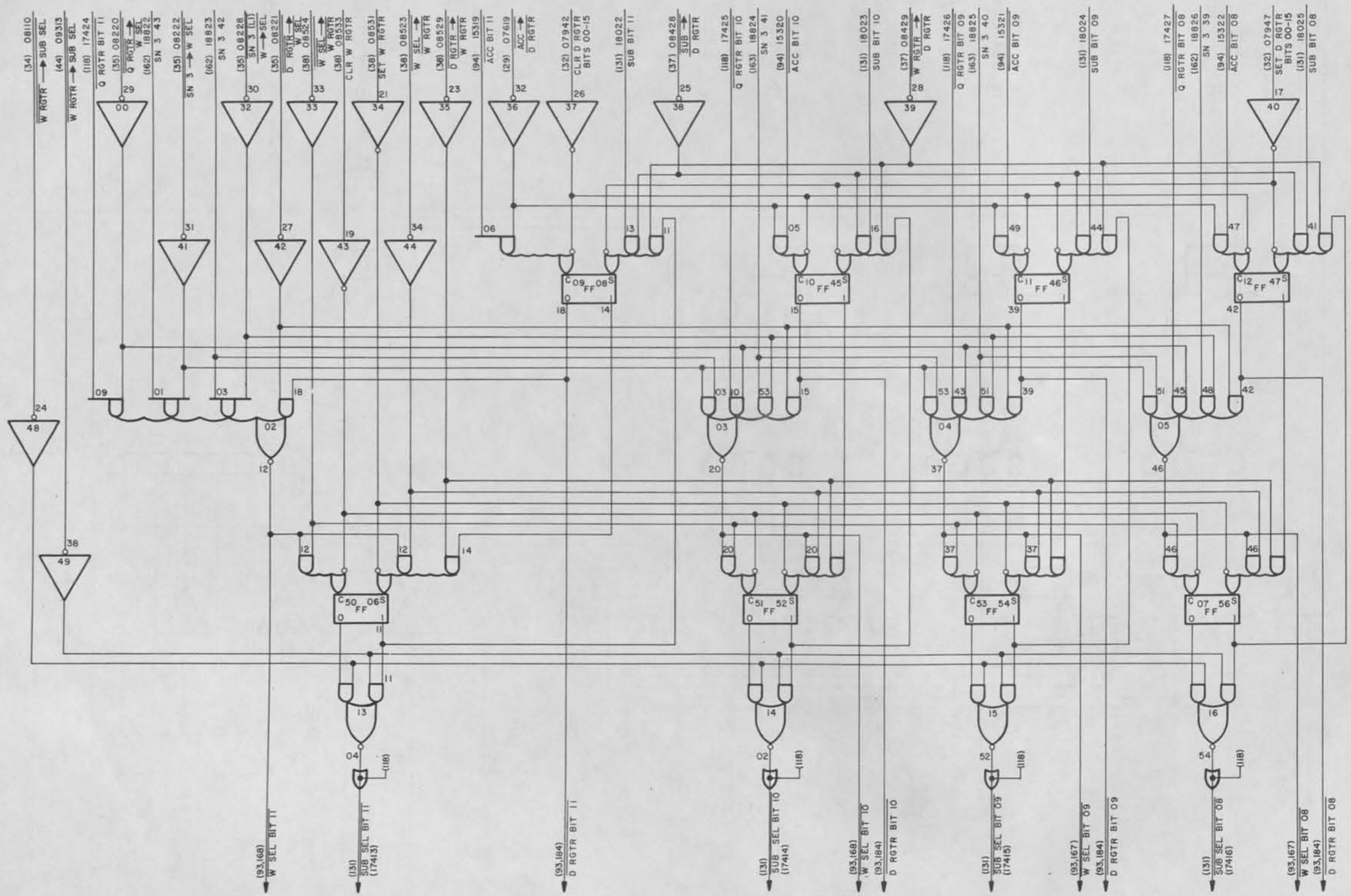

NOTES:
1. CARD TYPE - 2010
2. CARD LOCATION - 69C

ARITHMETIC REGISTER I, BITS 08—11, PART I

174

SIZE	CODE IDENT	DWG NO.
D	90536	7073539
SCALE	CLASS A	SHEET 117

DWG. NO. 7073539

UD 1-8534C

REVISIONS						
ZONE	LTR	EIR	DESCRIPTION	CHK	DATE	APPROVED

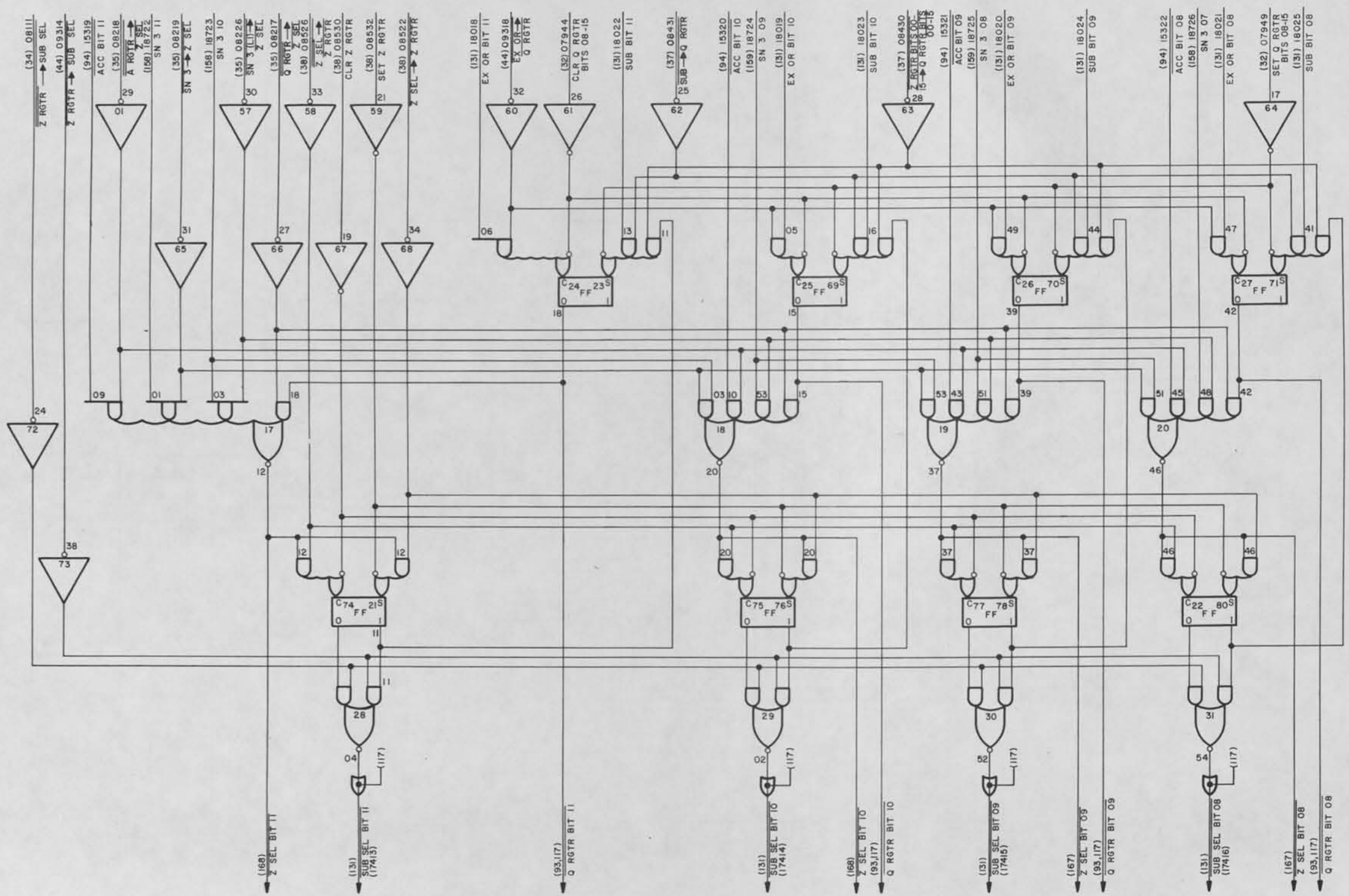

NOTES:
1. CARD TYPE - 2010
2. CARD LOCATION - 70C

ARITHMETIC REGISTER I, BITS 08—11, PART 2 | 174

SIZE	CODE IDENT	DWG NO.
D	90536	7073539
SCALE	CLASS A	SHEET 118

DWG. NO. 7073539

UD 1-8534C

REVISIONS						
ZONE	LTR	EIR	DESCRIPTION	CHK	DATE	APPROVED

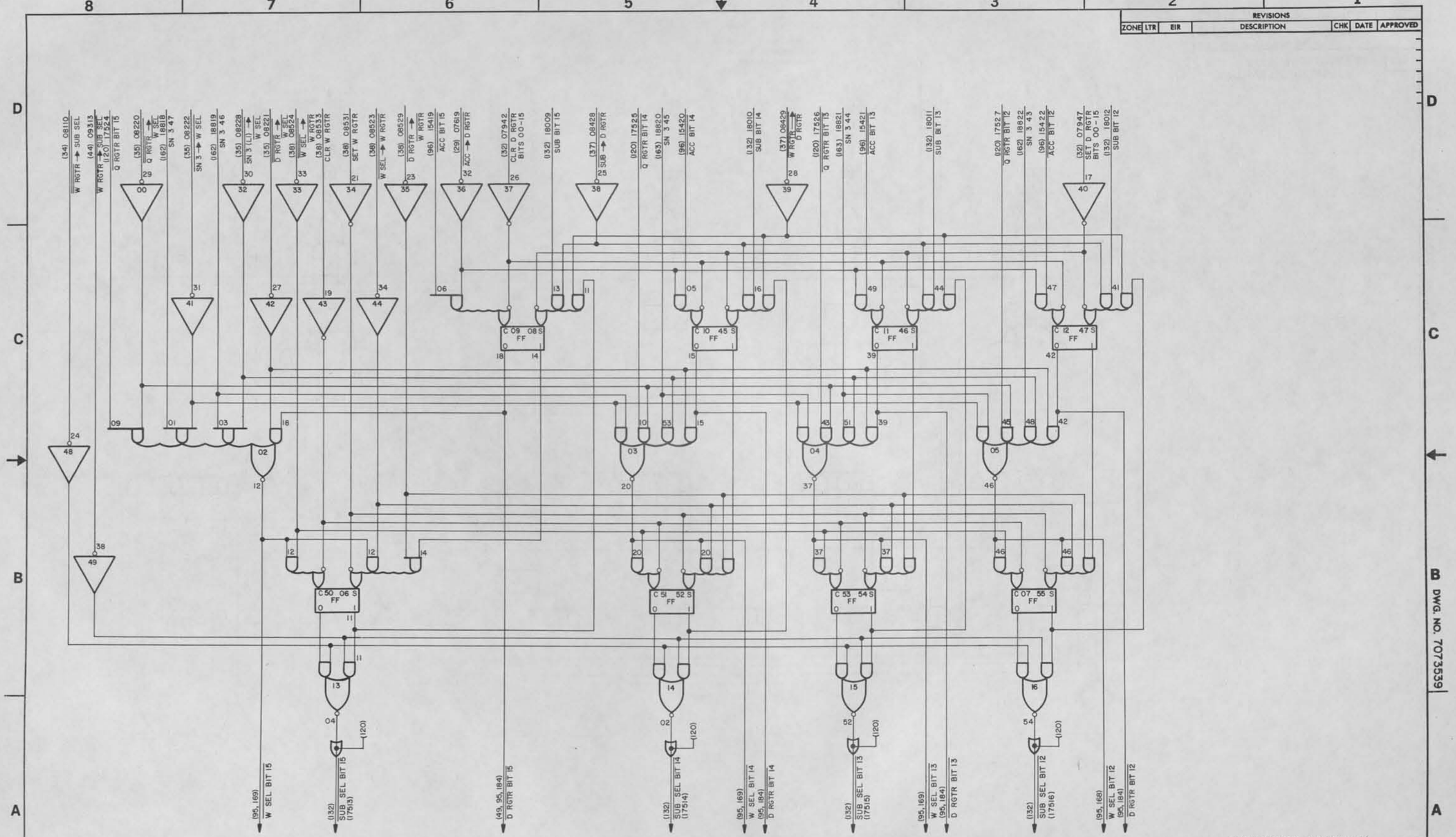

NOTES:
1. CARD TYPE—2010
2. CARD LOCATION—66C

ARITHMETIC REGISTER I, BITS 12–15 (PART I)

175

SIZE	CODE IDENT	DWG NO.
D	90536	7073539
SCALE	CLASS A	SHEET 19

DWG. NO. 7073539

UD 1-8534C

REVISIONS						
ZONE	LTR	EIR	DESCRIPTION	CHK	DATE	APPROVED

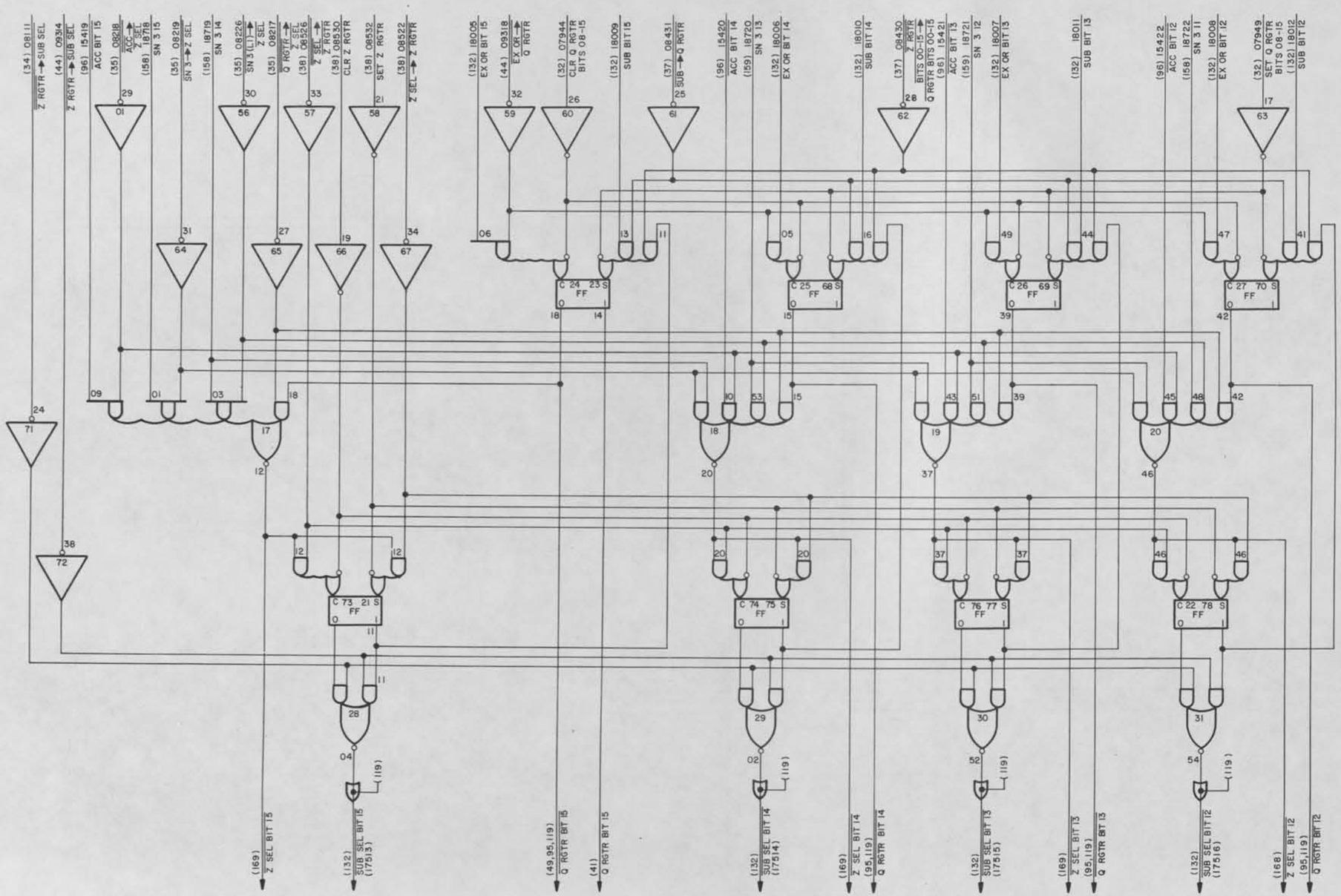

NOTES:
1. CARD TYPE—2010
2. CARD LOCATION—67C

ARITHMETIC REGISTER I, BITS 12–15 (PART 2) 175

SIZE	CODE IDENT	DWG NO.
D	90536	7073539
SCALE	CLASS A	SHEET 120

DWG. NO. 7073539

UD 1-9534C

REVISIONS						
ZONE	LTR	EIR	DESCRIPTION	CHK	DATE	APPROVED

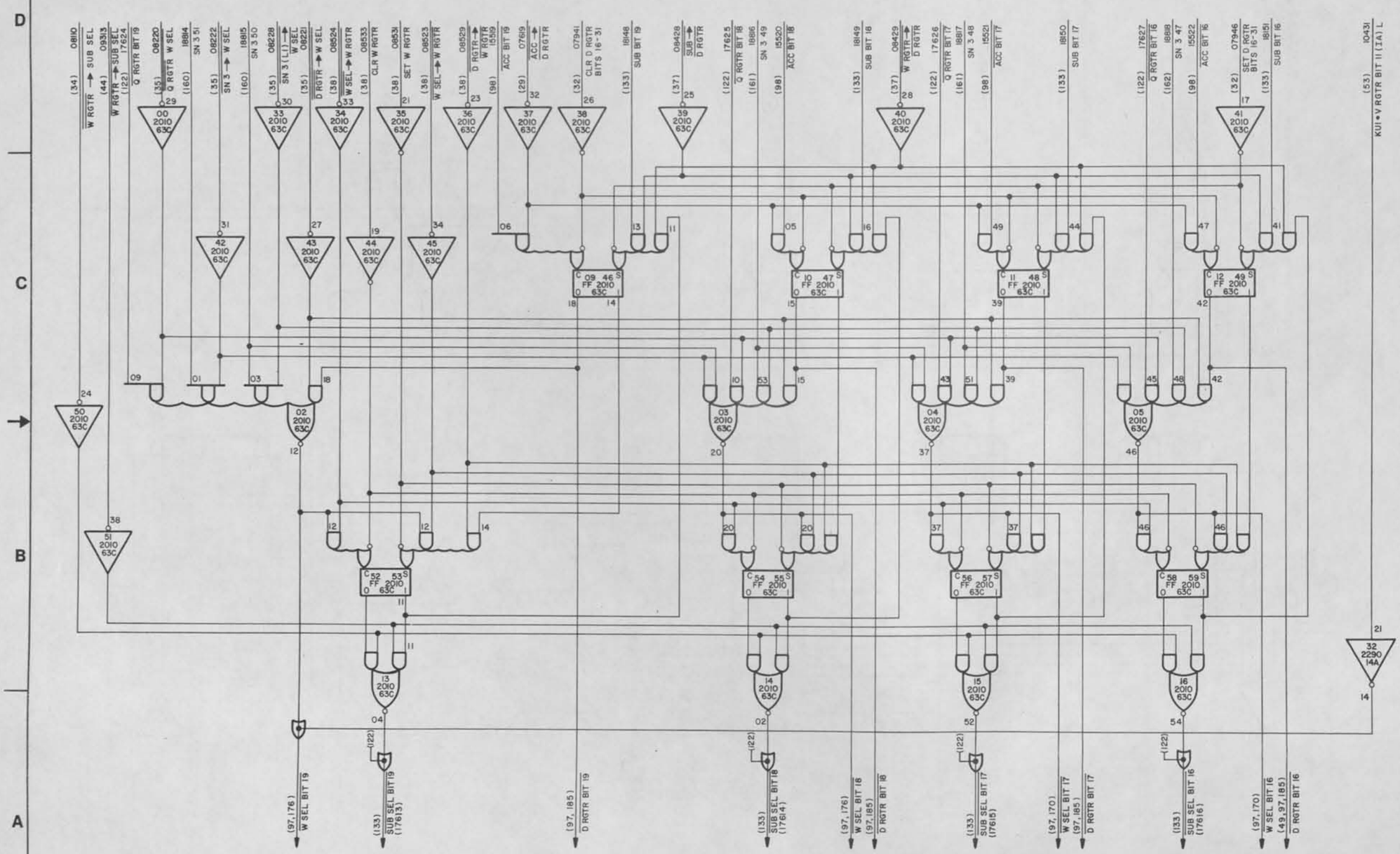

ARITHMETIC REGISTER 1, BITS 16-19 (PART 1)

176

SIZE	CODE IDENT	DWG NO.
D	90536	7073539
SCALE	CLASS A	SHEET 2

DWG. NO. 7073539

UD 1-8534C

REVISIONS						
ZONE	LTR	EIR	DESCRIPTION	CHK	DATE	APPROVED

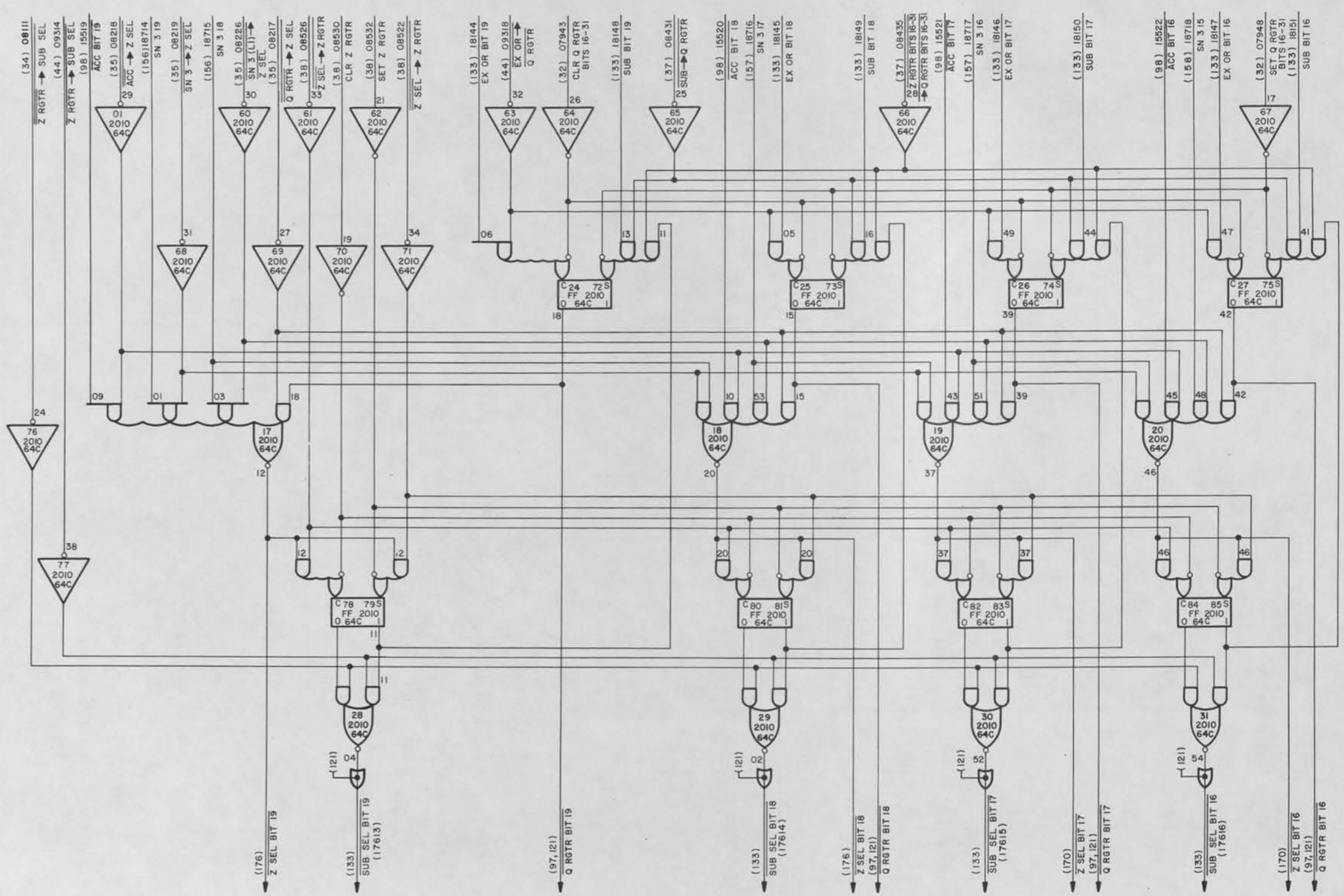

ARTHMETIC REGISTER 1, BITS 16–19 (PART 2) 176

SIZE	CODE IDENT	DWG NO.
D	90536	7073539
SCALE	CLASS A	SHEET 122

DWG. NO. 7073539

UD 1-8534C

REVISIONS						
ZONE	LTR	EIR	DESCRIPTION	CHK	DATE	APPROVED
	CA	D06588	SEE EIR		12-15-72	

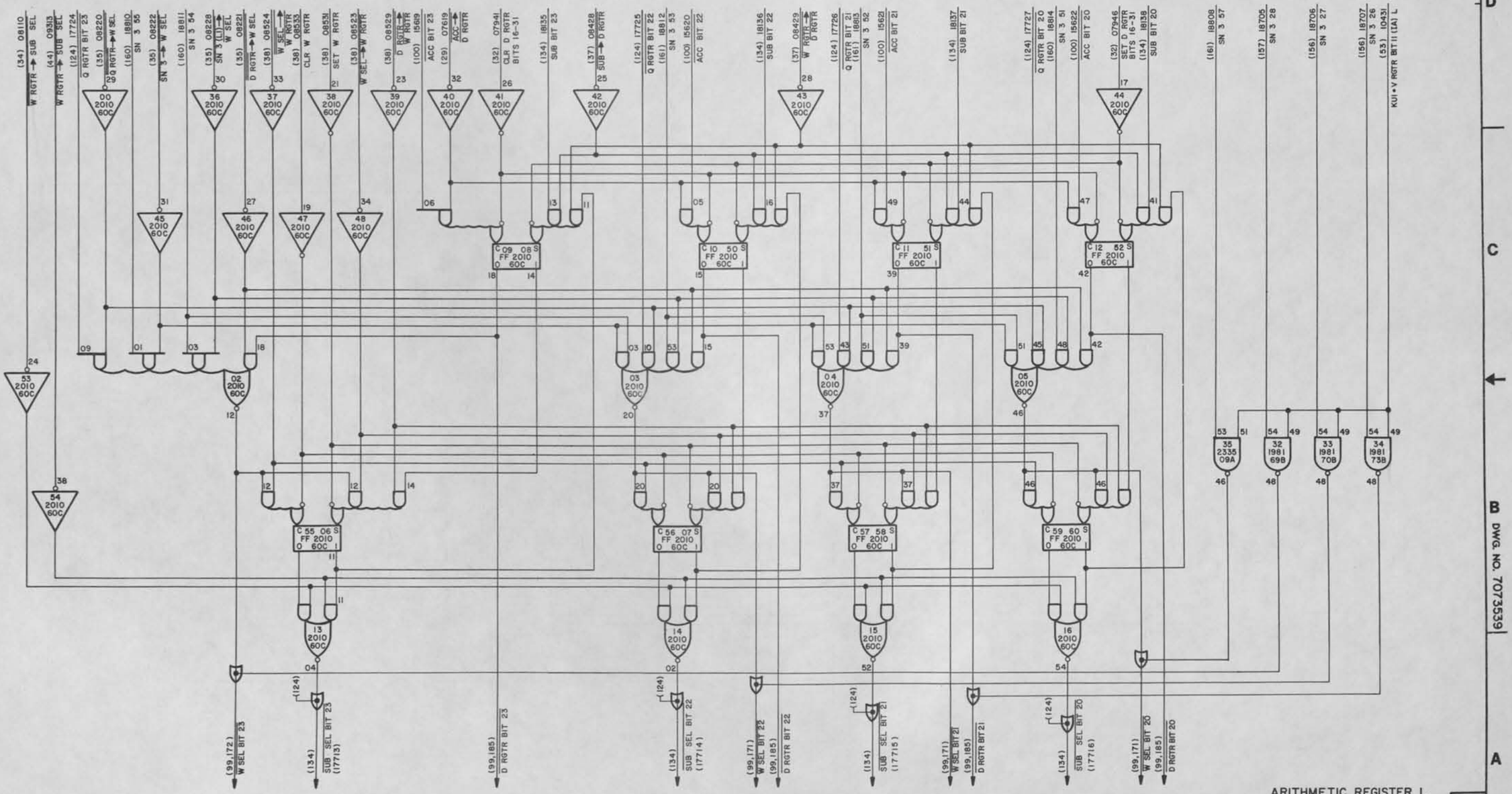

ARITHMETIC REGISTER 1, BITS 20-23 (PART 1) 177

SIZE	CODE IDENT	DWG NO.
D	90536	7073539
SCALE	CLASS A	SHEET 123

DWG. NO. 7073539

CHANGE 2

UD 1-8534C

REVISIONS						
ZONE	LTR	EIR	DESCRIPTION	CHK	DATE	APPROVED

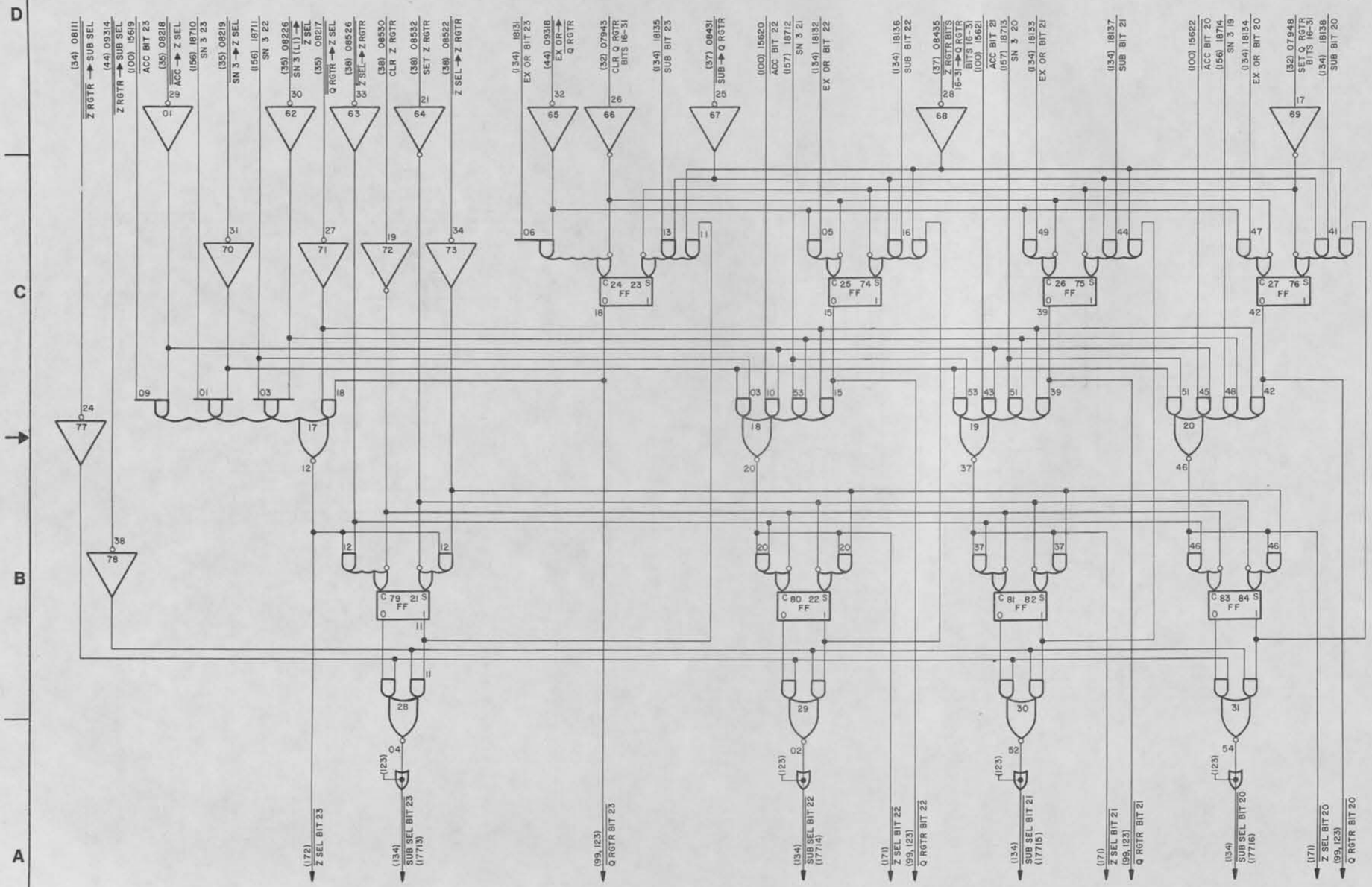

NOTES:
1. CARD TYPE 2010
2. CARD LOCATION 61C

ARITHMETIC REGISTER I, BITS 20-23 (PART 2) 177

SIZE	CODE IDENT	DWG NO.
D	90536	7073539
SCALE	CLASS A	SHEET 24

DWG. NO. 7073539

UD 1-8534C

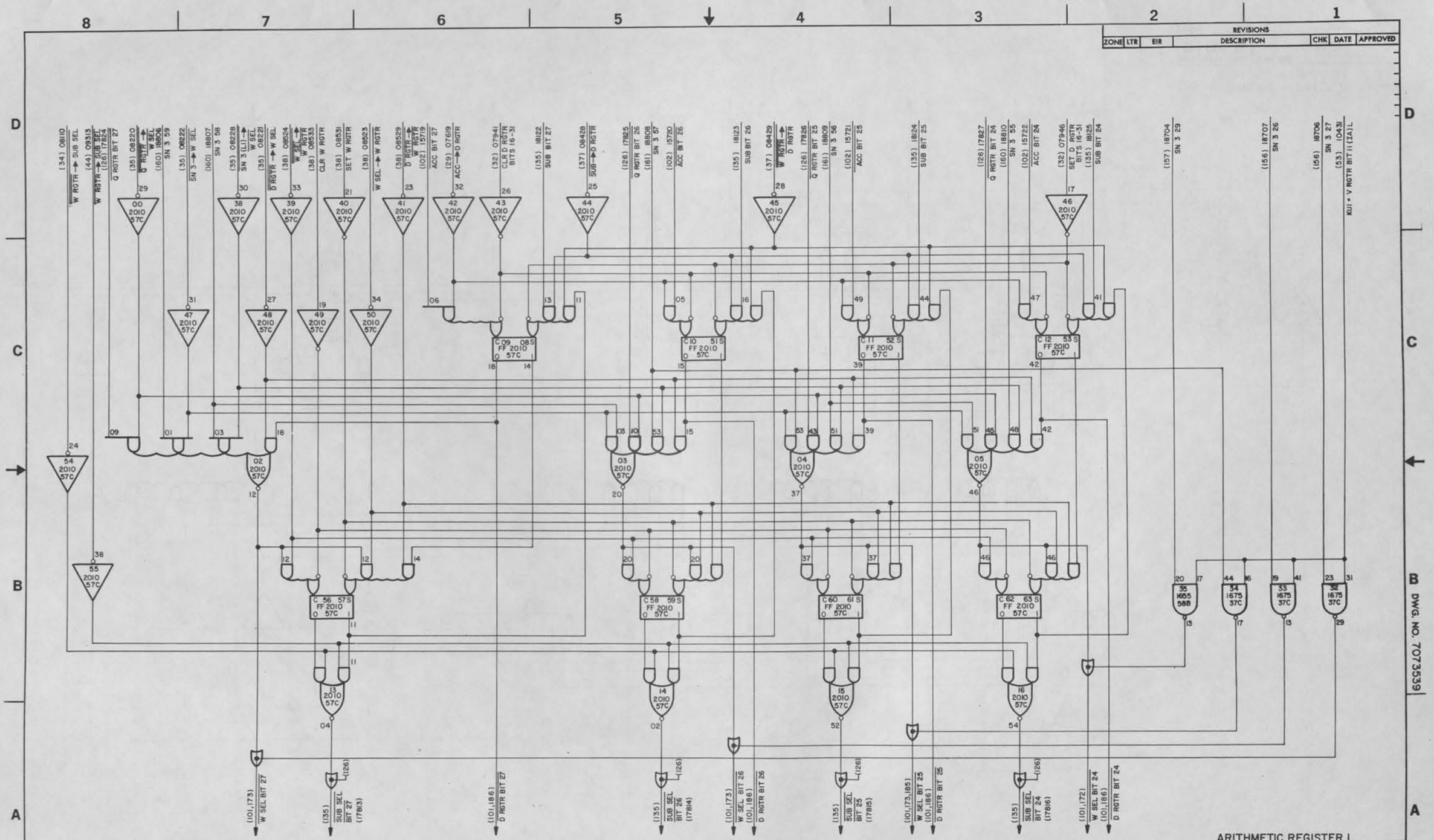
REVISIONS
ZONE LTR EIR DESCRIPTION CHK DATE APPROVED
ARITHMETIC REGISTER I,
BITS 24-27 (PART I)
178
SIZE D
CODE IDENT 90536
DWG NO. 7073539
SCALE
CLASS A
SHEET 25
DWG. NO. 7073539
UD 1-3534C

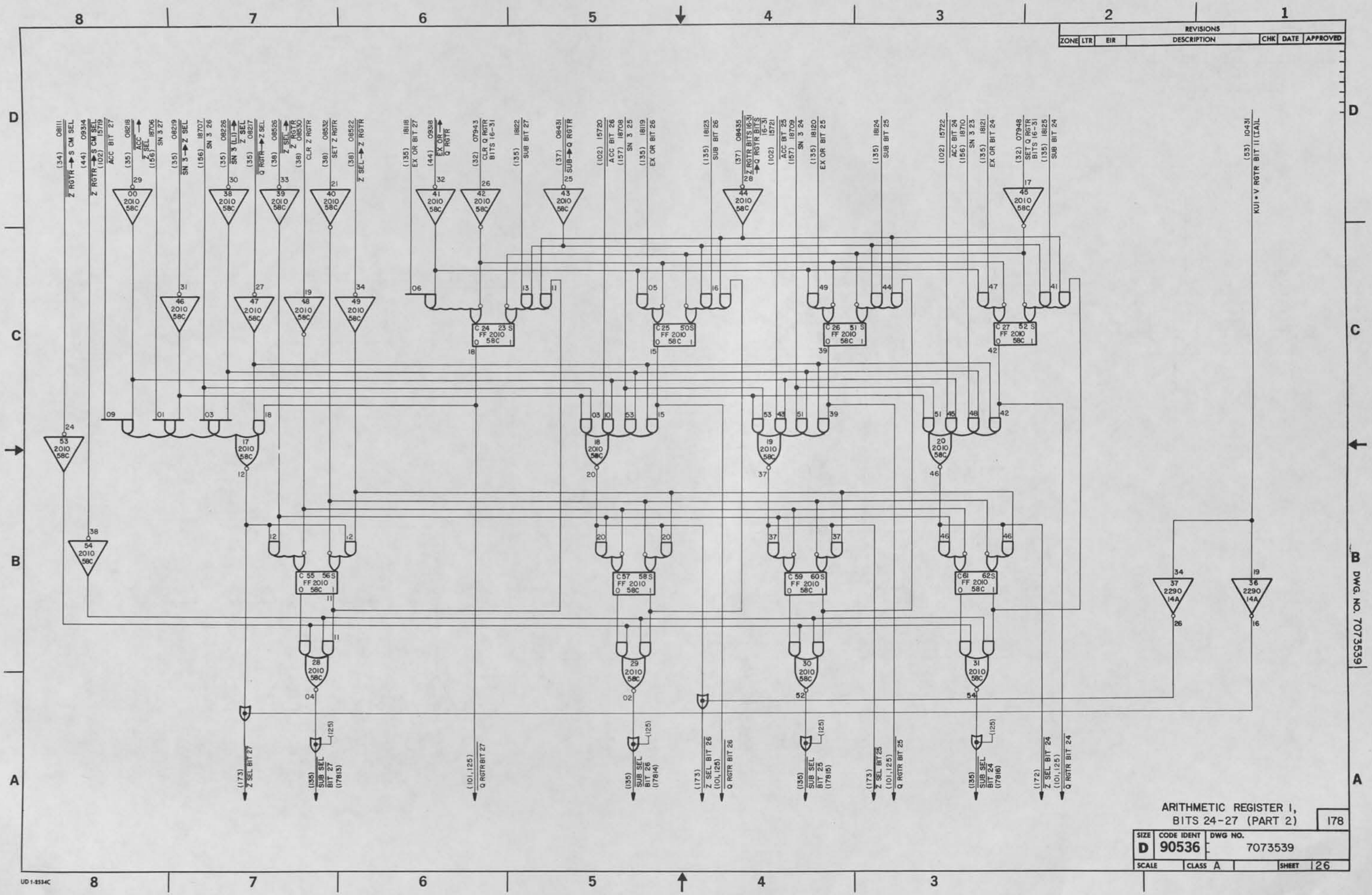
REVISIONS
ZONE LTR EIR DESCRIPTION CHK DATE APPROVED
ARITHMETIC REGISTER I,
BITS 24-27 (PART 2)
178
SIZE D
CODE IDENT 90536
DWG NO. 7073539
SCALE
CLASS A
SHEET 26
DWG. NO. 7073539
UD 1-8534C

REVISIONS						
ZONE	LTR	EIR	DESCRIPTION	CHK	DATE	APPROVED
	CA	D06588	SEE EIR		12-18-72	

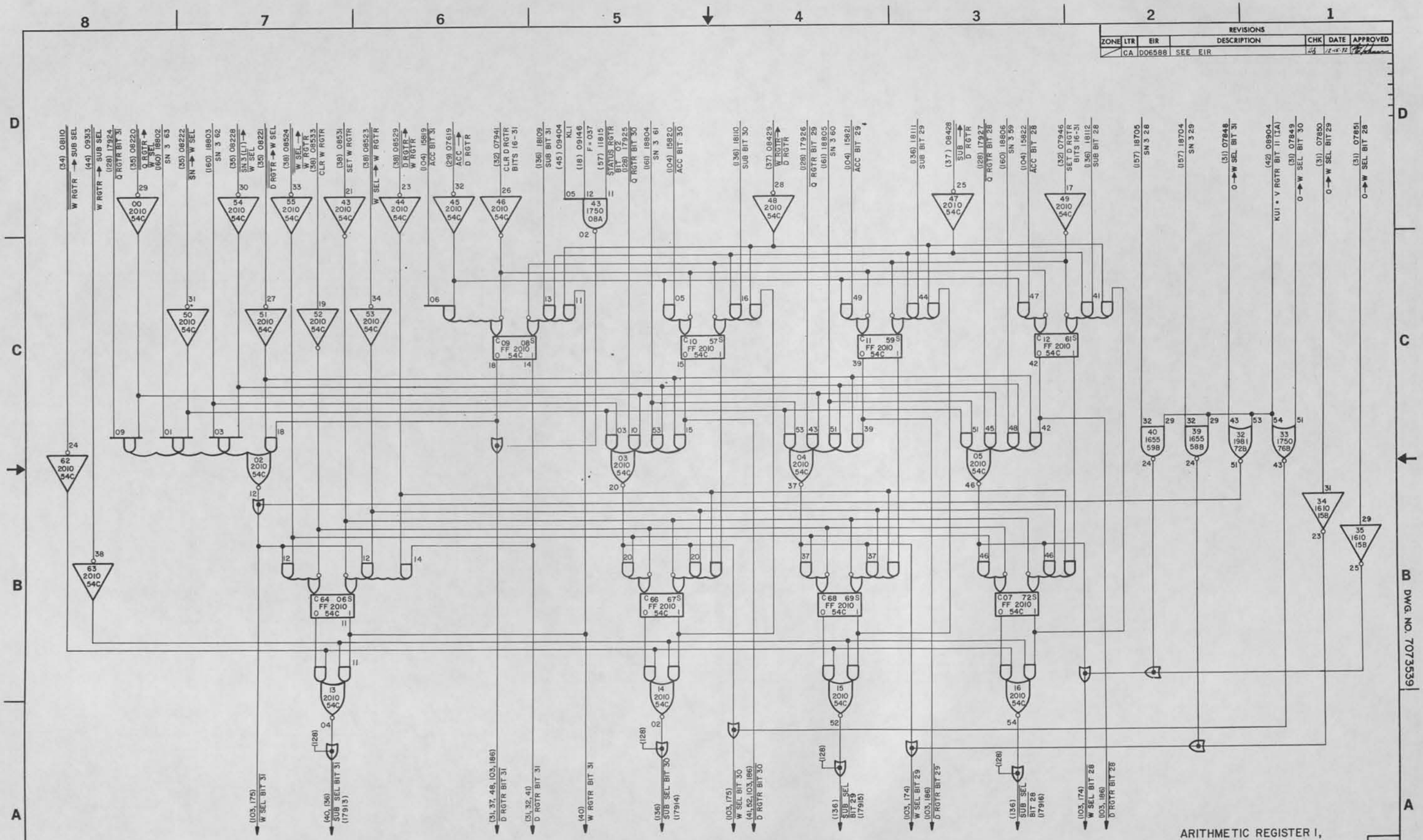

ARITHMETIC REGISTER 1, BITS 28-31 (PART 1)

179

SIZE	CODE IDENT	DWG NO.
D	90536	7073539
SCALE	CLASS A	SHEET 27

DWG. NO. 7073539

CHANGE 2

UD 1-5534C

REVISIONS						
ZONE	LTR	EIR	DESCRIPTION	CHK	DATE	APPROVED

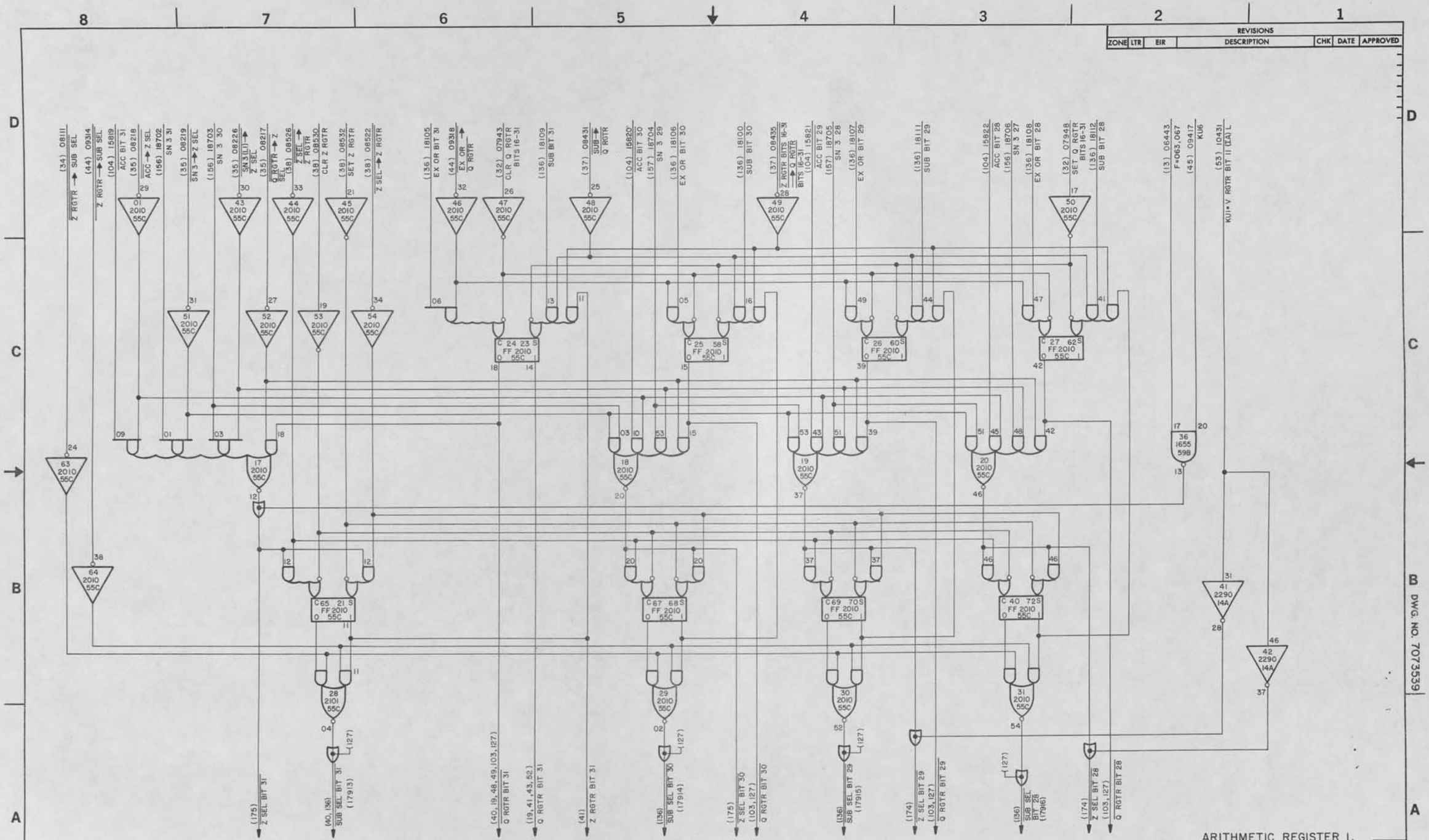

ARITHMETIC REGISTER 1, BITS 28-31 (PART 2)

179

SIZE	CODE IDENT	DWG NO.
D	90536	7073539
SCALE	CLASS A	SHEET 128

DWG. NO. 7073539

UD 1-2534C

REVISIONS						
ZONE	LTR	EIR	DESCRIPTION	CHK	DATE	APPROVED

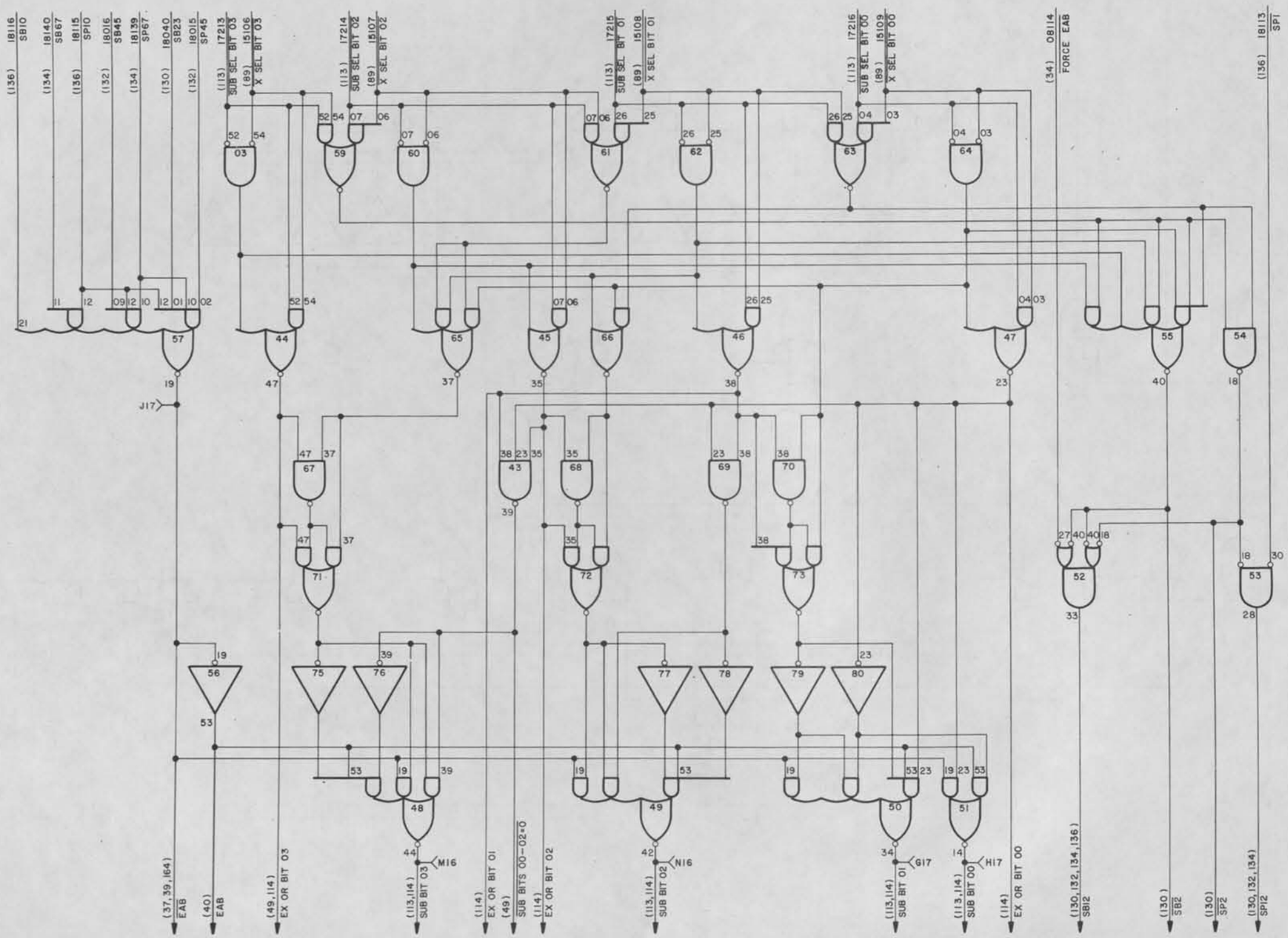

NOTE:
1. CARD TYPE-1655
2. CARD LOCATION -- 65B

SUBTRACTOR, BITS 00-03 | 180

SIZE	CODE IDENT	DWG NO.
D	90536	7073539
SCALE	CLASS A	SHEET 129

DWG. NO. 7073539

UD 1-8534C

REVISIONS						
ZONE	LTR	EIR	DESCRIPTION	CHK	DATE	APPROVED

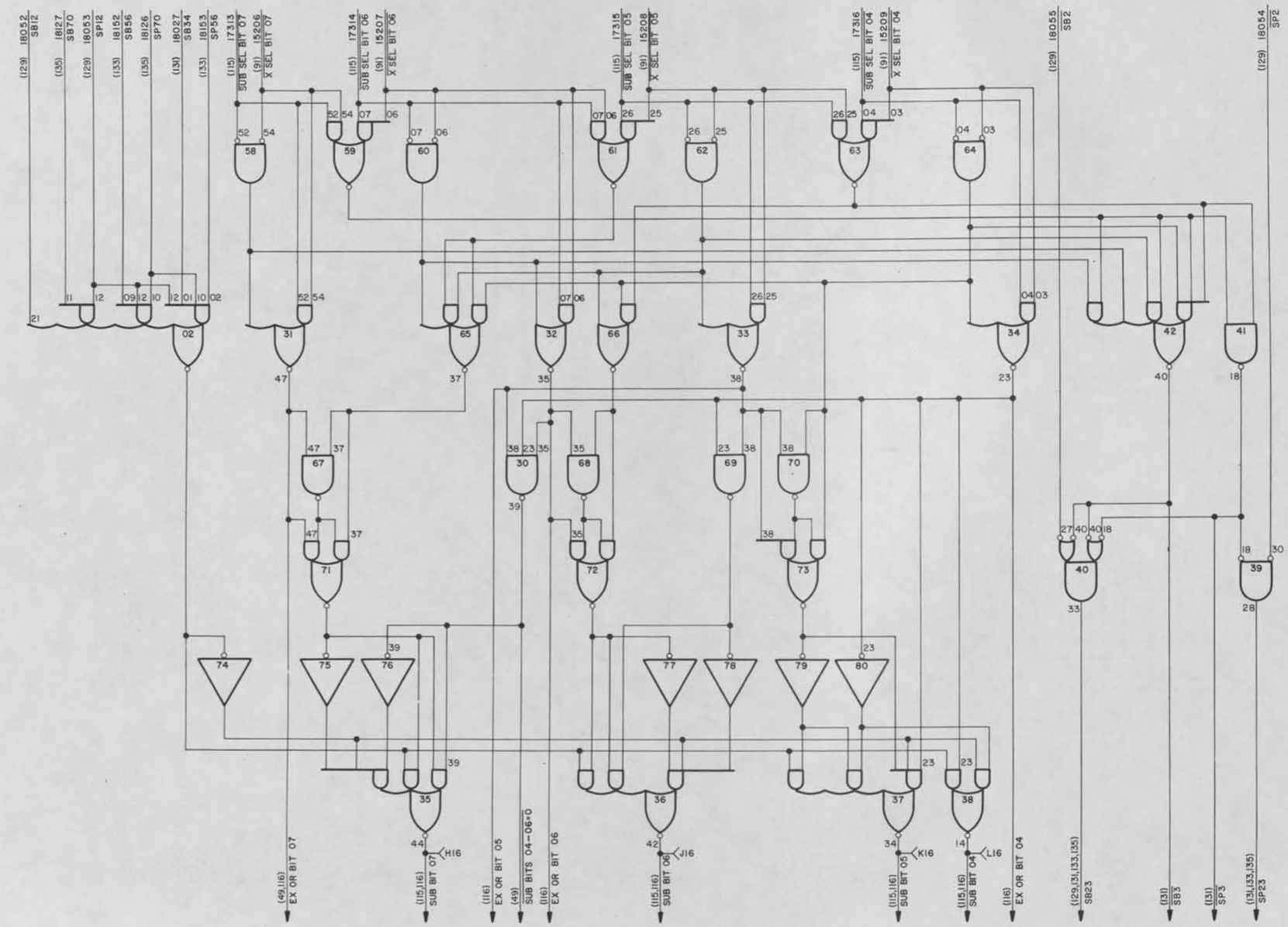

NOTE:
1. CARD TYPE – 1655
2. CARD LOCATION – 64B

SUBTRACTOR, BITS 04-07 | 180

SIZE	CODE IDENT	DWG NO.
D	90536	7073539
SCALE	CLASS A	SHEET 130

DWG. NO. 7073539

UD 1-8534C

REVISIONS						
ZONE	LTR	EIR	DESCRIPTION	CHK	DATE	APPROVED

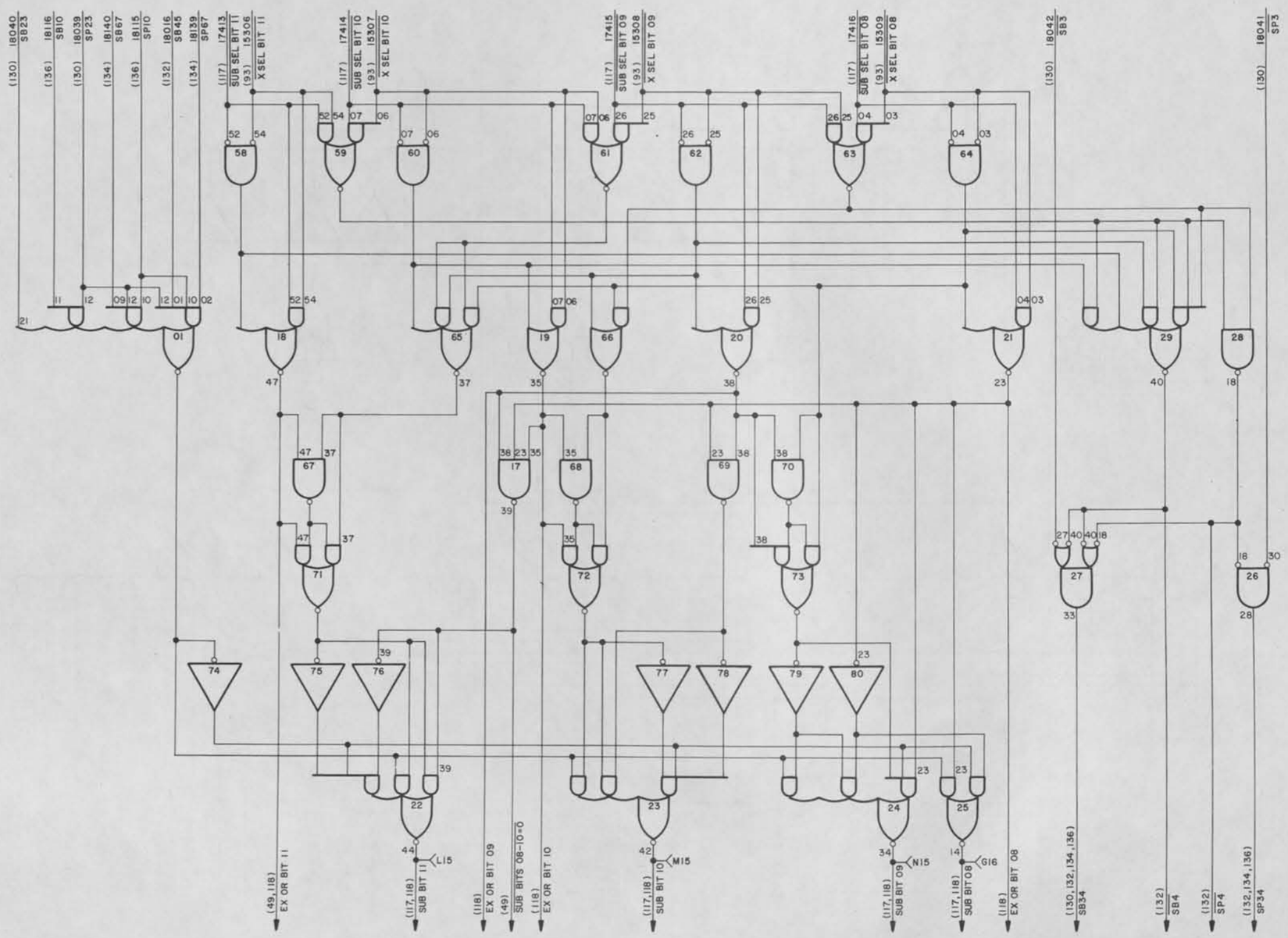

NOTE:
1. CARD TYPE-1655
2. CARD LOCATION — 63B

SUBTRACTOR, BITS 08-11 | 180

SIZE	CODE IDENT	DWG NO.
D	90536	7073539
SCALE	CLASS A	SHEET 3

DWG. NO. 7073539

UD 1-5534C

REVISIONS						
ZONE	LTR	EIR	DESCRIPTION	CHK	DATE	APPROVED

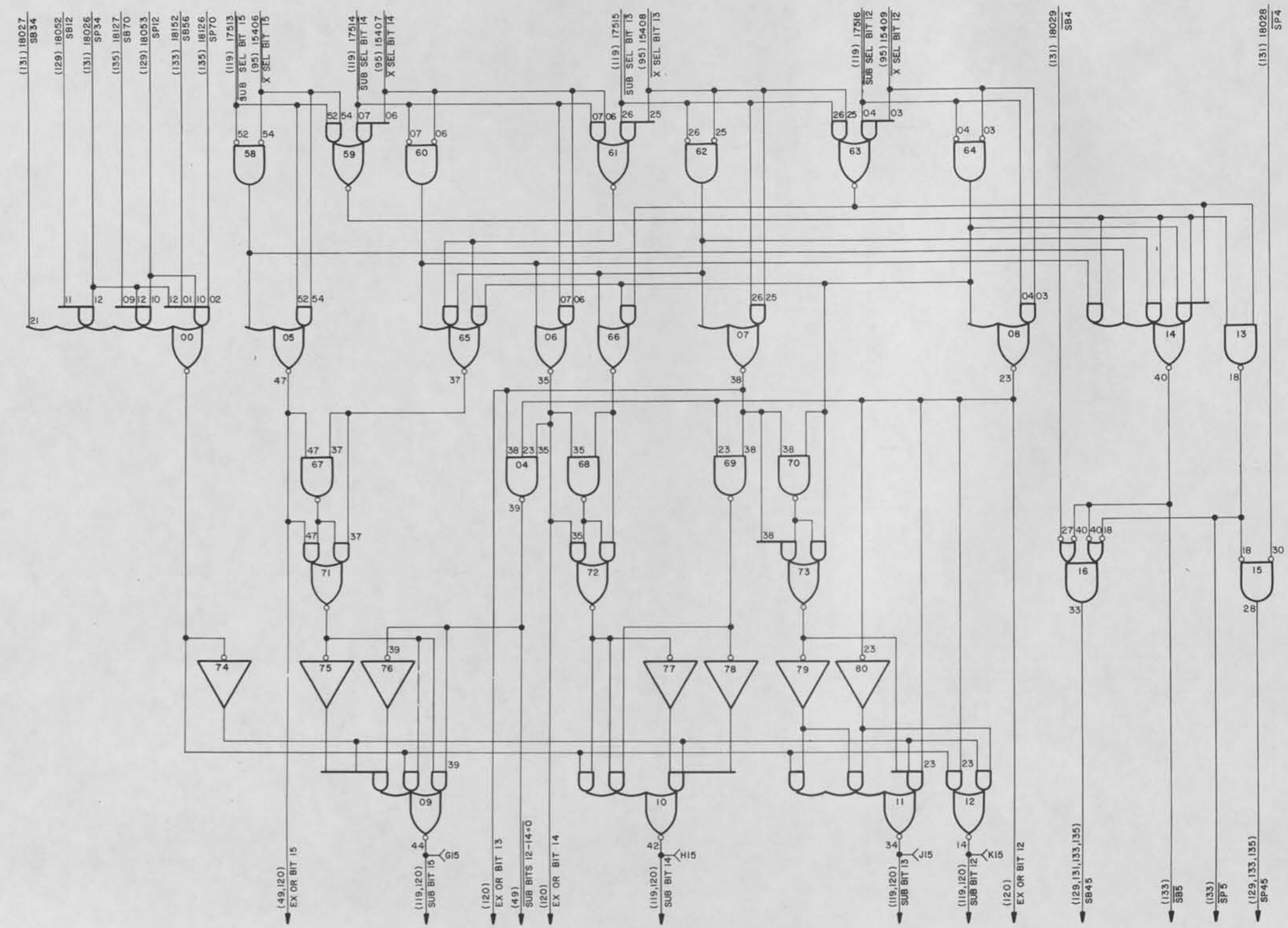

NOTE:
1. CARD TYPE—1655
2. CARD LOCATION — 62B

SUBTRACTOR, BITS 12-15 | 180

SIZE	CODE IDENT	DWG NO.
D	90536	7073539
SCALE	CLASS A	SHEET 132

DWG. NO. 7073539

UD 1-2534C

REVISIONS						
ZONE	LTR	EIR	DESCRIPTION	CHK	DATE	APPROVED

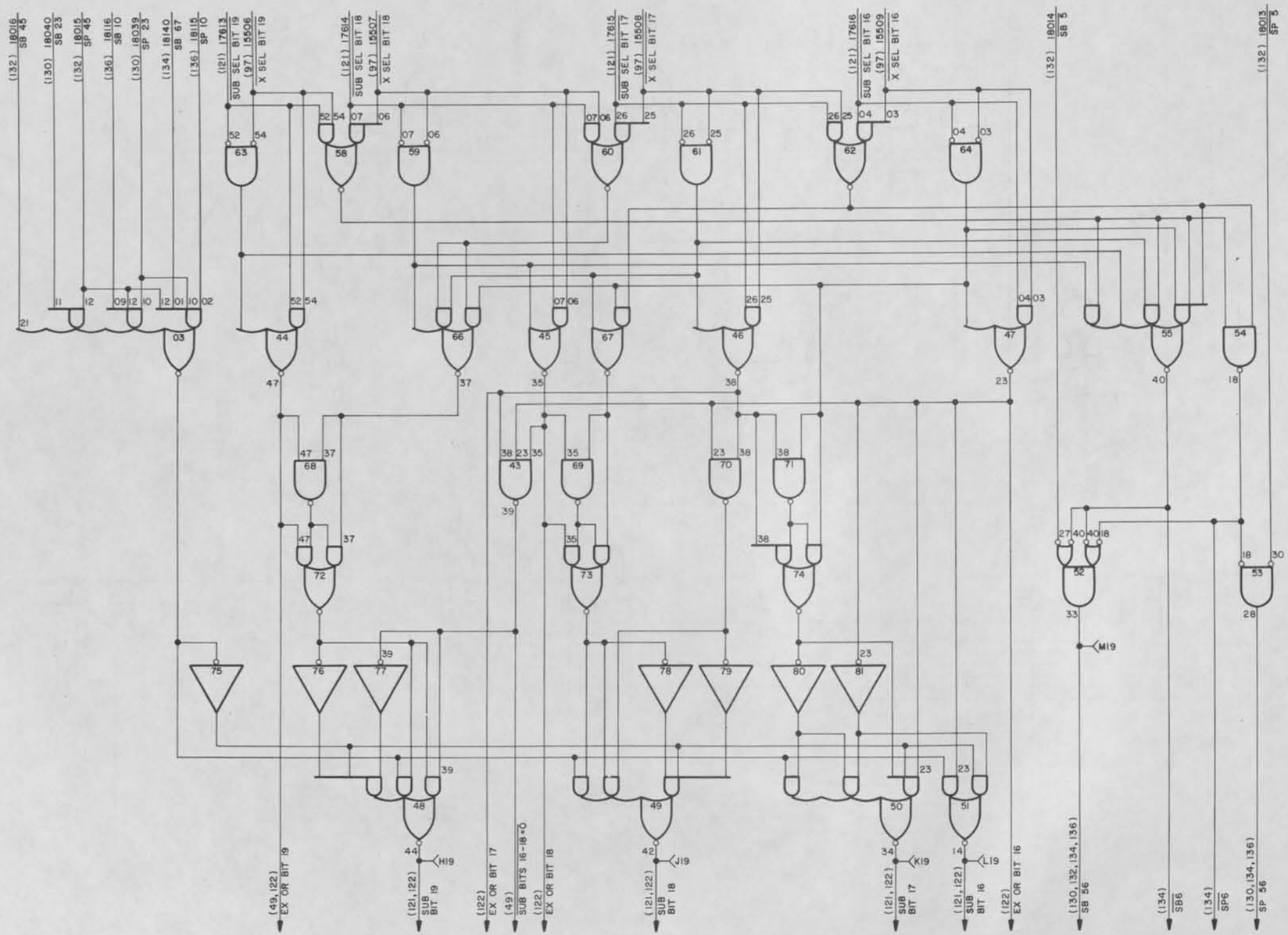

NOTE:
1. CARD TYPE-1655
2. CARD LOCATION-61B

SUBTRACTOR, BITS 16 - 19 | 181

SIZE	CODE IDENT	DWG NO.
D	90536	7073539
SCALE	CLASS A	SHEET 133

DWG. NO. 7073539

UD 1-8534C

REVISIONS						
ZONE	LTR	EIR	DESCRIPTION	CHK	DATE	APPROVED

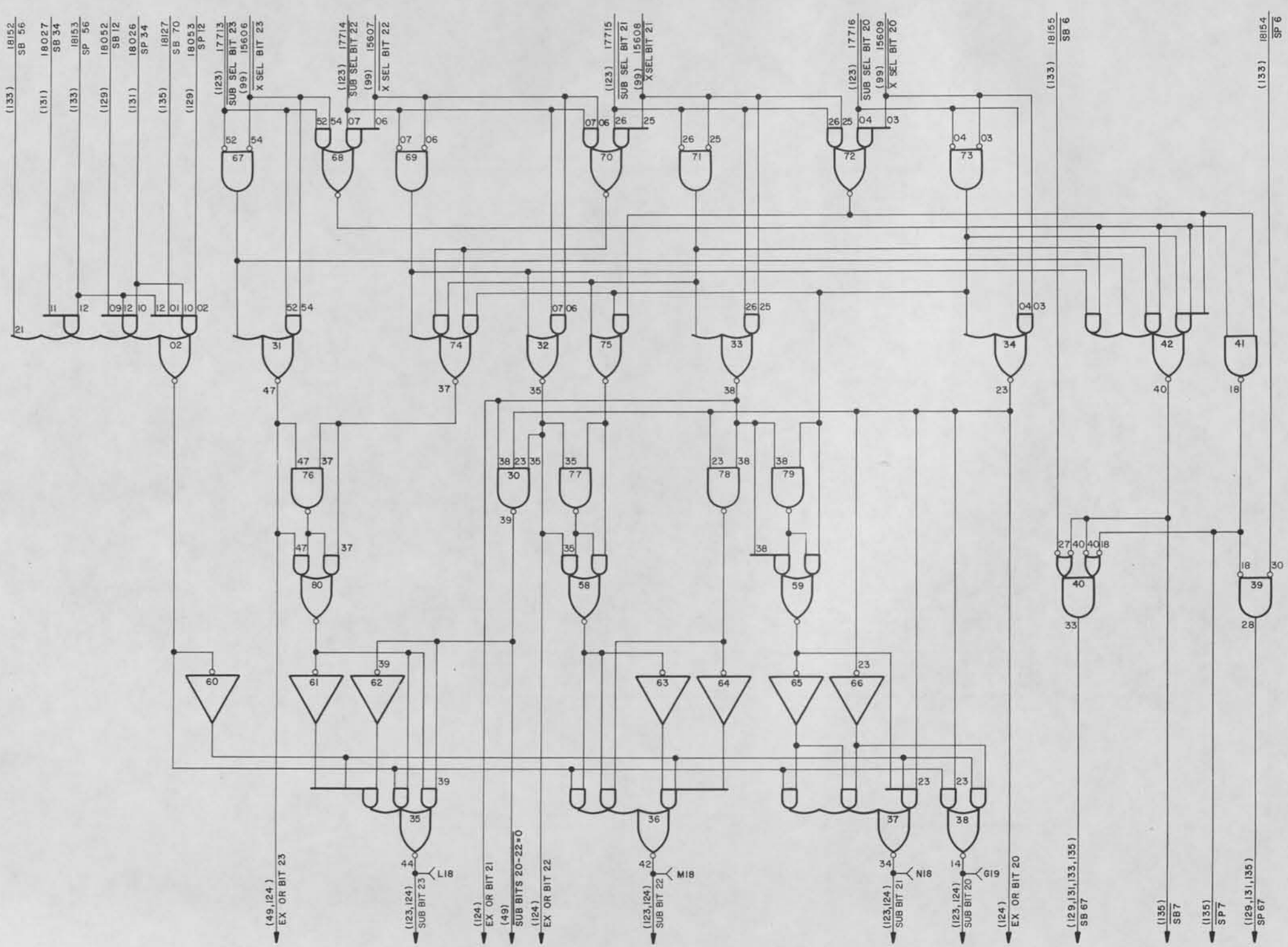

NOTE:
1. CARD TYPE-1655
2. CARD LOCATION-60B

SUBTRACTOR, BITS 20-23 | 181

SIZE	CODE IDENT	DWG NO.
D	90536	7073539
SCALE	CLASS A	SHEET 134

DWG. NO. 7073539

UD 1-8534C

REVISIONS						
ZONE	LTR	EIR	DESCRIPTION	CHK	DATE	APPROVED

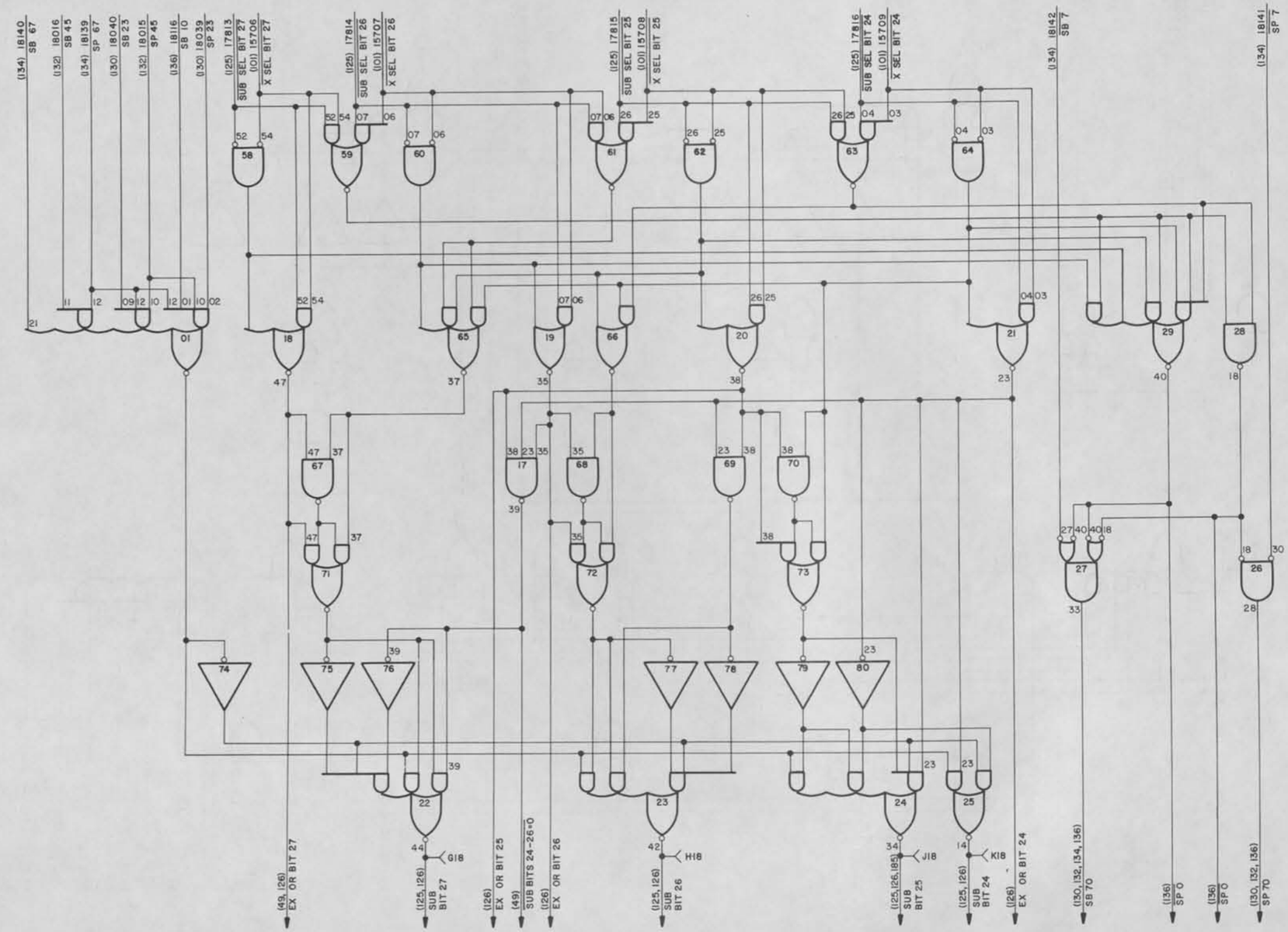

NOTE:
1. CARD TYPE – 1655
2. CARD LOCATION – 59B

SUBTRACTOR, BITS 24-27 | 181

SIZE	CODE IDENT	DWG NO.
D	90536	7073539
SCALE	CLASS A	SHEET 35

DWG. NO. 7073539

UD 1-8534C

REVISIONS						
ZONE	LTR	EIR	DESCRIPTION	CHK	DATE	APPROVED

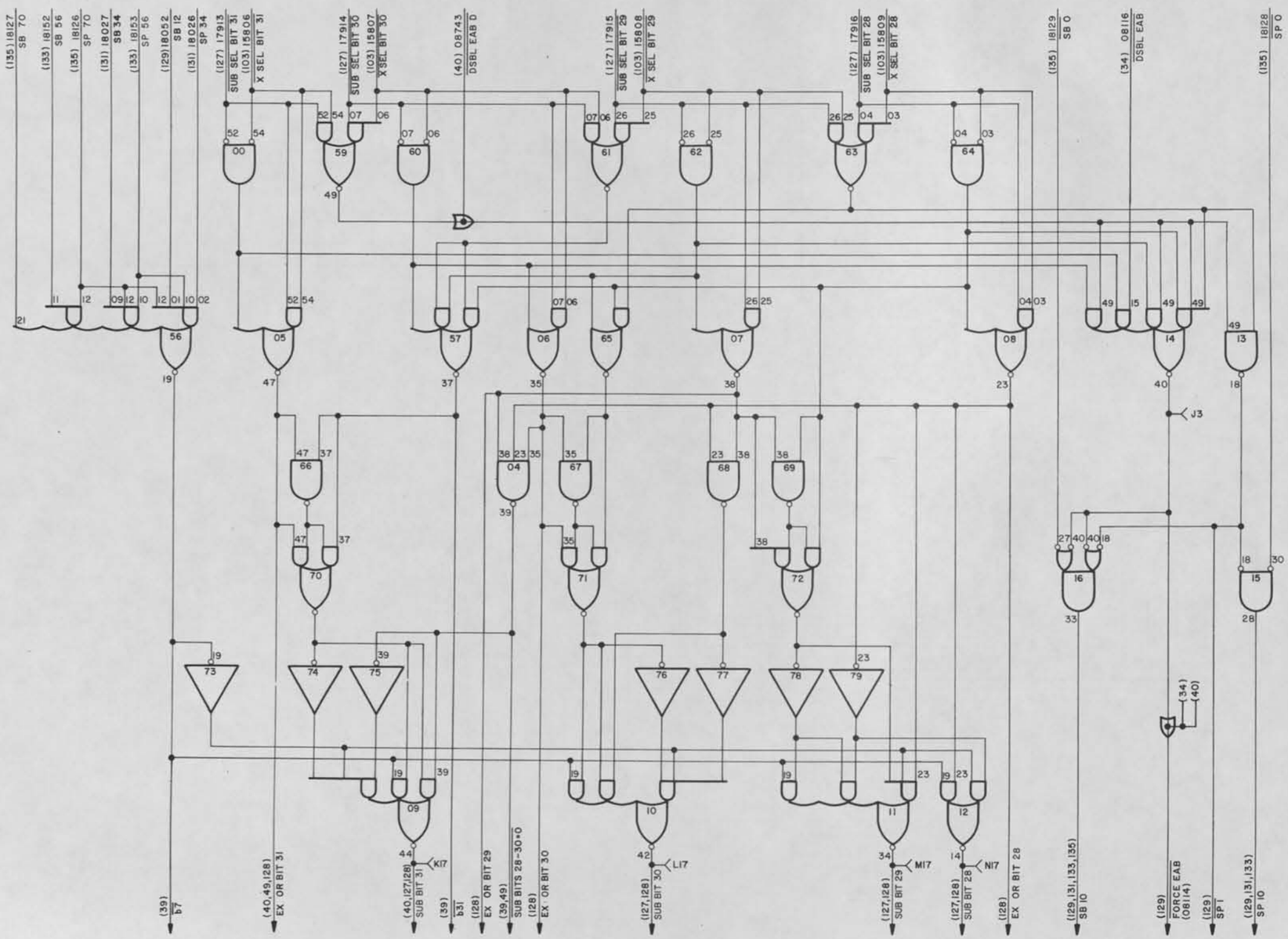

NOTE:
1. CARD TYPE-1655
2. CARD LOCATION-58B

SUBTRACTOR, BITS 28-31 | 181

SIZE	CODE IDENT	DWG NO.
D	90536	7073539
SCALE	CLASS A	SHEET 136

DWG. NO. 7073539

UD 1-8534C

REVISIONS						
ZONE	LTR	EIR	DESCRIPTION	CHK	DATE	APPROVED

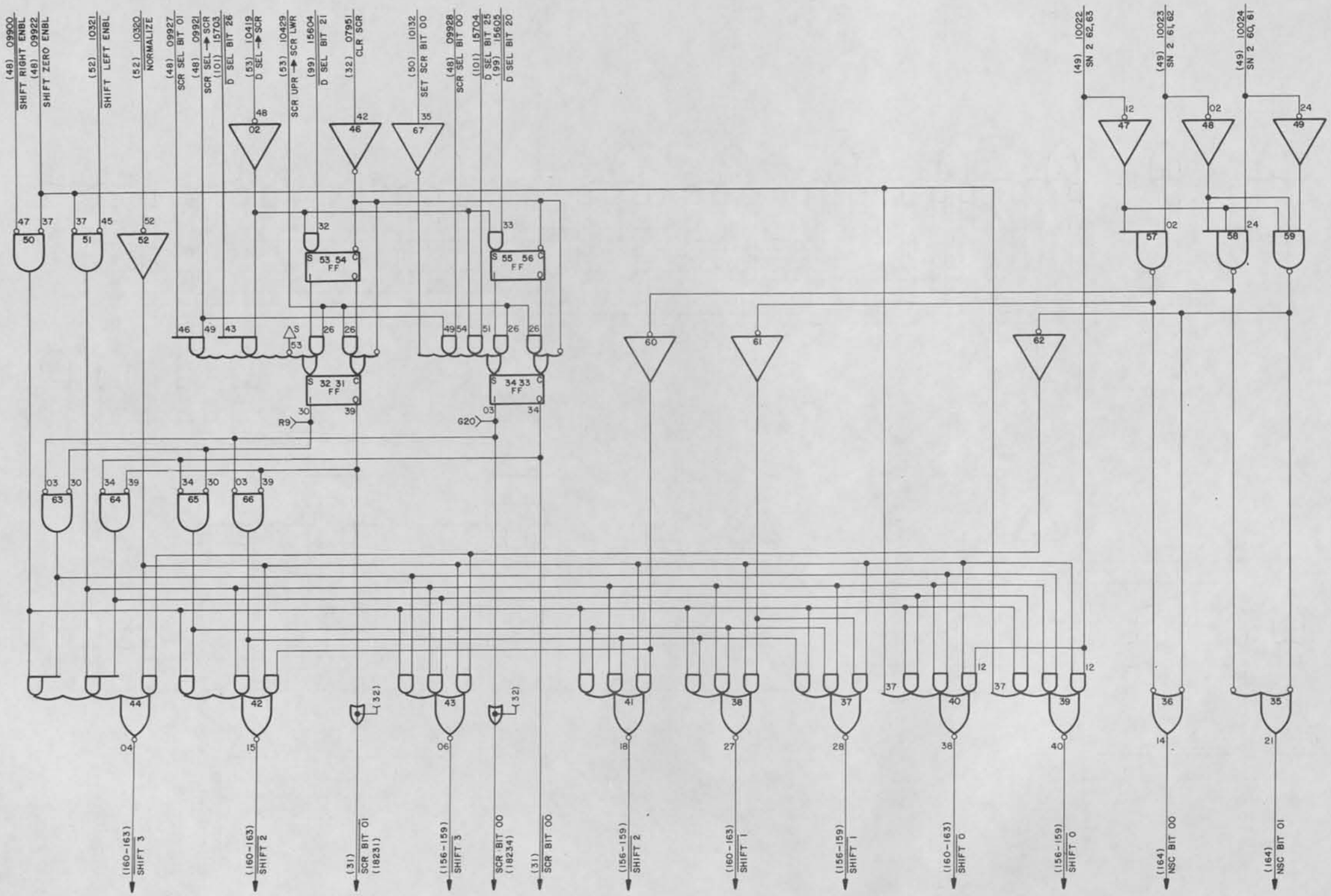

NOTE:
1. CARD TYPE - 1675
2. CARD LOCATION - 49C

SHIFT COUNT REGISTER BITS 00, 01 | 182

SIZE	CODE IDENT	DWG NO.
D	90536	7073539
SCALE	CLASS A	SHEET 137

DWG. NO. 7073539

UD 1-8534C

REVISIONS						
ZONE	LTR	EIR	DESCRIPTION	CHK	DATE	APPROVED

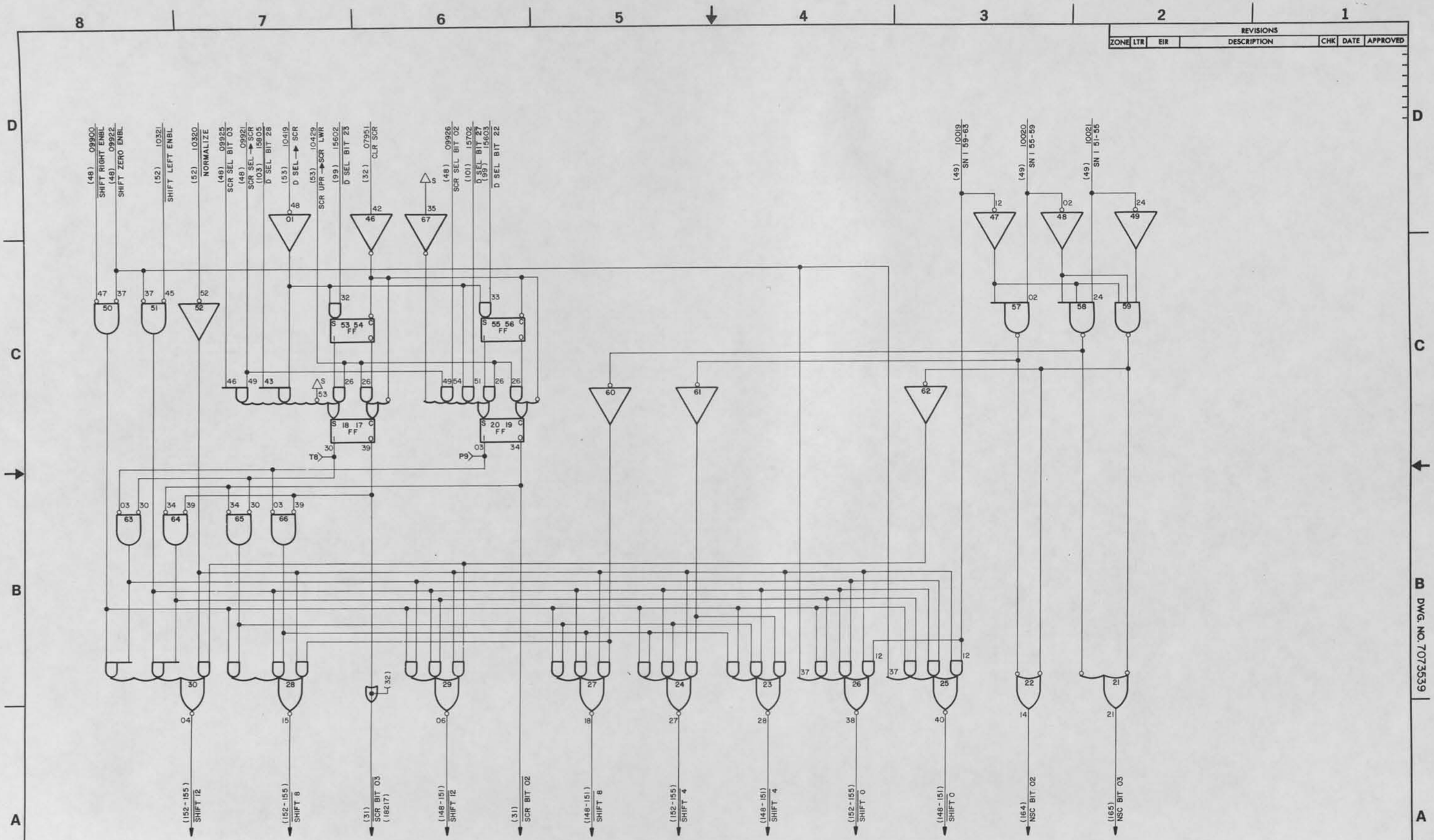

NOTES:
1. CARD TYPE - 1675
2. CARD LOCATION - 44C

SHIFT COUNT REGISTER BITS 02, 03 | 182

SIZE	CODE IDENT	DWG NO.
D	90536	7073539
SCALE	CLASS A	SHEET 138

DWG. NO. 7073539

UD 1-8534C

REVISIONS						
ZONE	LTR	EIR	DESCRIPTION	CHK	DATE	APPROVED
	CA	006588	SEE EIR		12-15-72	

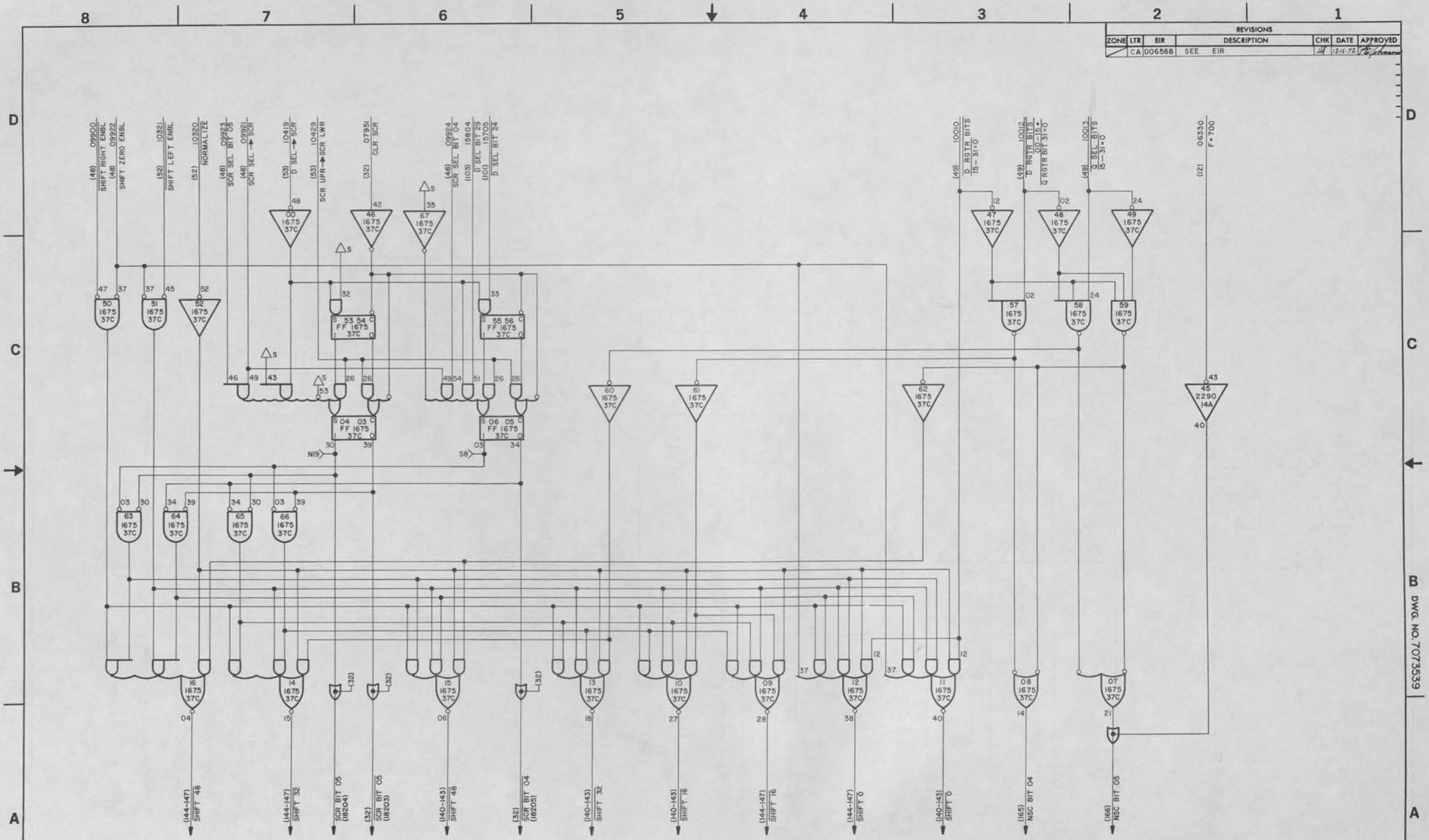

SHIFT COUNT REGISTER BITS 04, 05 | 182

SIZE	CODE IDENT	DWG NO.
D	90536	7073539
SCALE	CLASS A	SHEET 139

DWG. NO. 7073539

CHANGE 2

UD 1-8534C

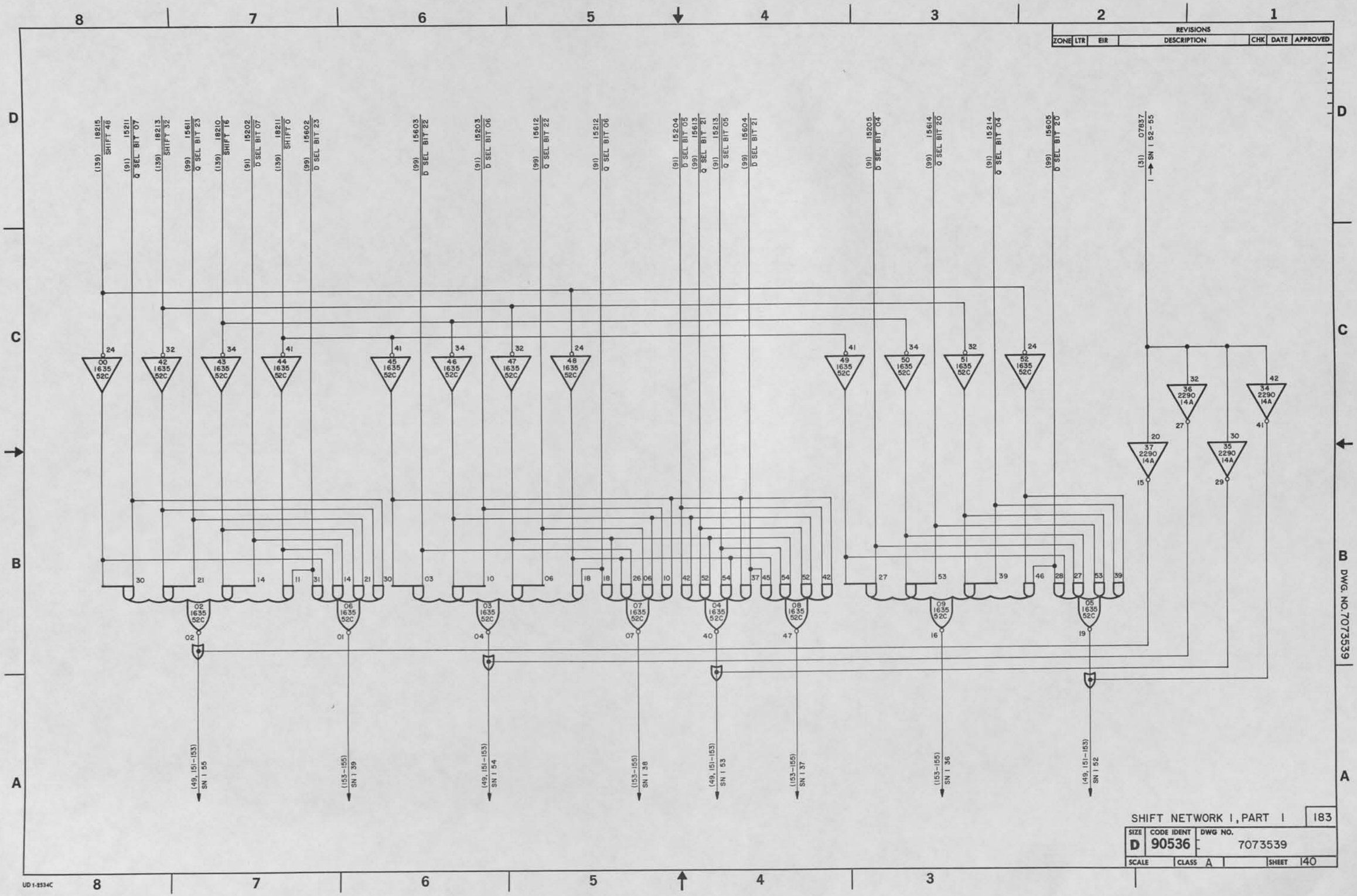
REVISIONS
ZONE LTR EIR DESCRIPTION CHK DATE APPROVED
(139) 18215 SHIFT 48
(91) 15211 Q SEL BIT 07
(139) 18213 SHIFT 32
(99) 15611 Q SEL BIT 23
(139) 18210 SHIFT 16
(91) 15202 D SEL BIT 07
(139) 18211 SHIFT 0
(99) 15602 D SEL BIT 23
(99) 15603 D SEL BIT 22
(91) 15203 D SEL BIT 06
(99) 15612 Q SEL BIT 22
(91) 15212 Q SEL BIT 06
(91) 15204 D SEL BIT 05
(99) 15613 Q SEL BIT 21
(91) 15213 Q SEL BIT 05
(99) 15604 D SEL BIT 21
(91) 15205 D SEL BIT 04
(99) 15614 Q SEL BIT 20
(91) 15214 Q SEL BIT 04
(99) 15605 D SEL BIT 20
(31) 07837 I → SN I 52-55
00 1635 52C
42 1635 52C
43 1635 52C
44 1635 52C
45 1635 52C
46 1635 52C
47 1635 52C
48 1635 52C
49 1635 52C
50 1635 52C
51 1635 52C
52 1635 52C
36 2290 14A
34 2290 14A
37 2290 14A
35 2290 14A
02 1635 52C
06 1635 52C
03 1635 52C
07 1635 52C
04 1635 52C
08 1635 52C
09 1635 52C
05 1635 52C
(49, 151-153) SN I 55
(153-155) SN I 39
(49, 151-153) SN I 54
(153-155) SN I 38
(49, 151-153) SN I 53
(153-155) SN I 37
(153-155) SN I 36
(49, 151-153) SN I 52
DWG. NO. 7073539
SHIFT NETWORK I, PART I
183
SIZE D
CODE IDENT 90536
DWG NO. 7073539
SCALE
CLASS A
SHEET 140
UD 1-2534C

REVISIONS						
ZONE	LTR	EIR	DESCRIPTION	CHK	DATE	APPROVED

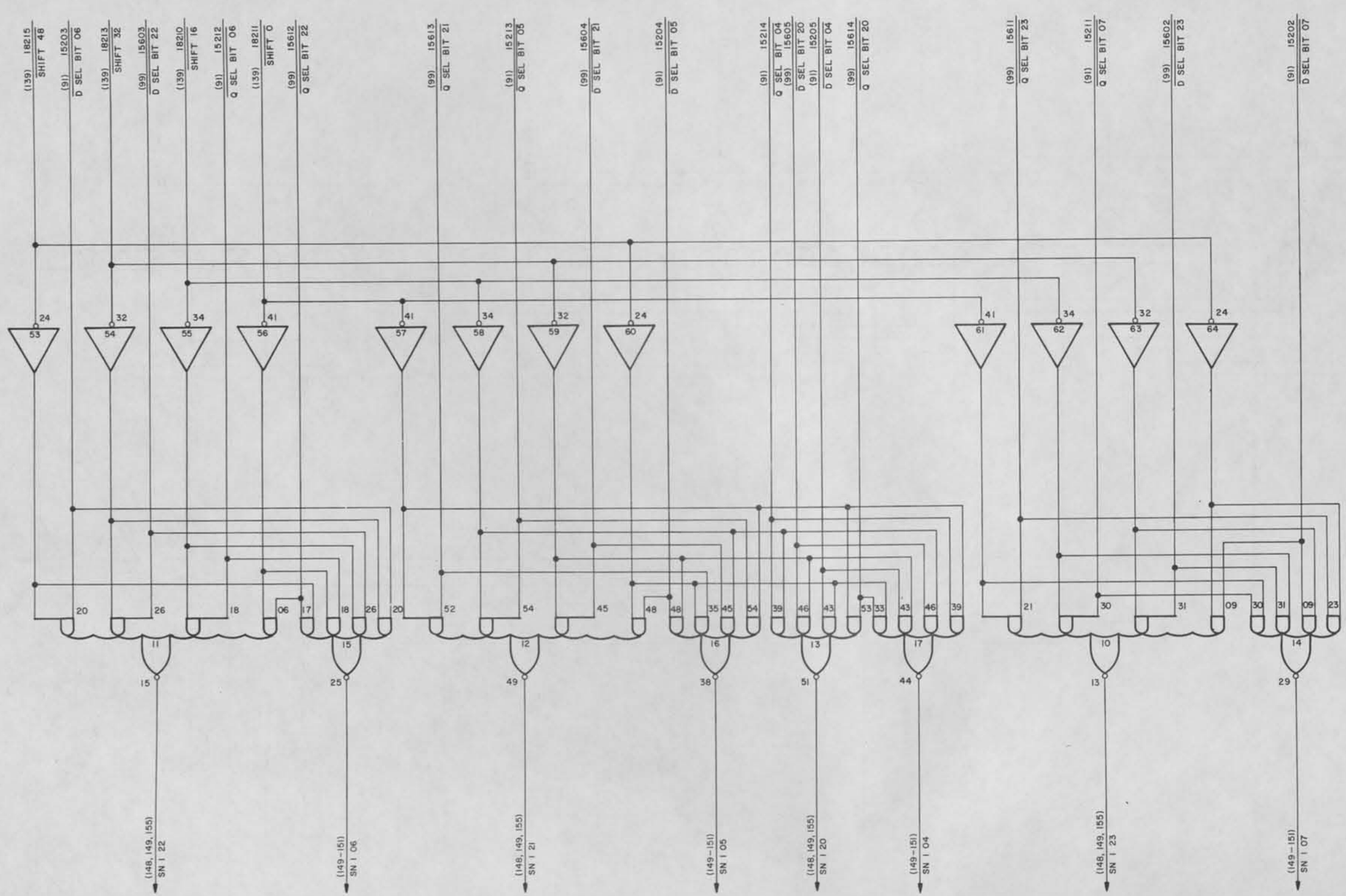

NOTES:
1. CARD TYPE – 1635
2. CARD LOCATION – 52C

SHIFT NETWORK 1, PART 2 | 183

SIZE	CODE IDENT	DWG NO.
D	90536	7073539
SCALE	CLASS A	SHEET 41

DWG. NO. 7073539

UD 1-8534C

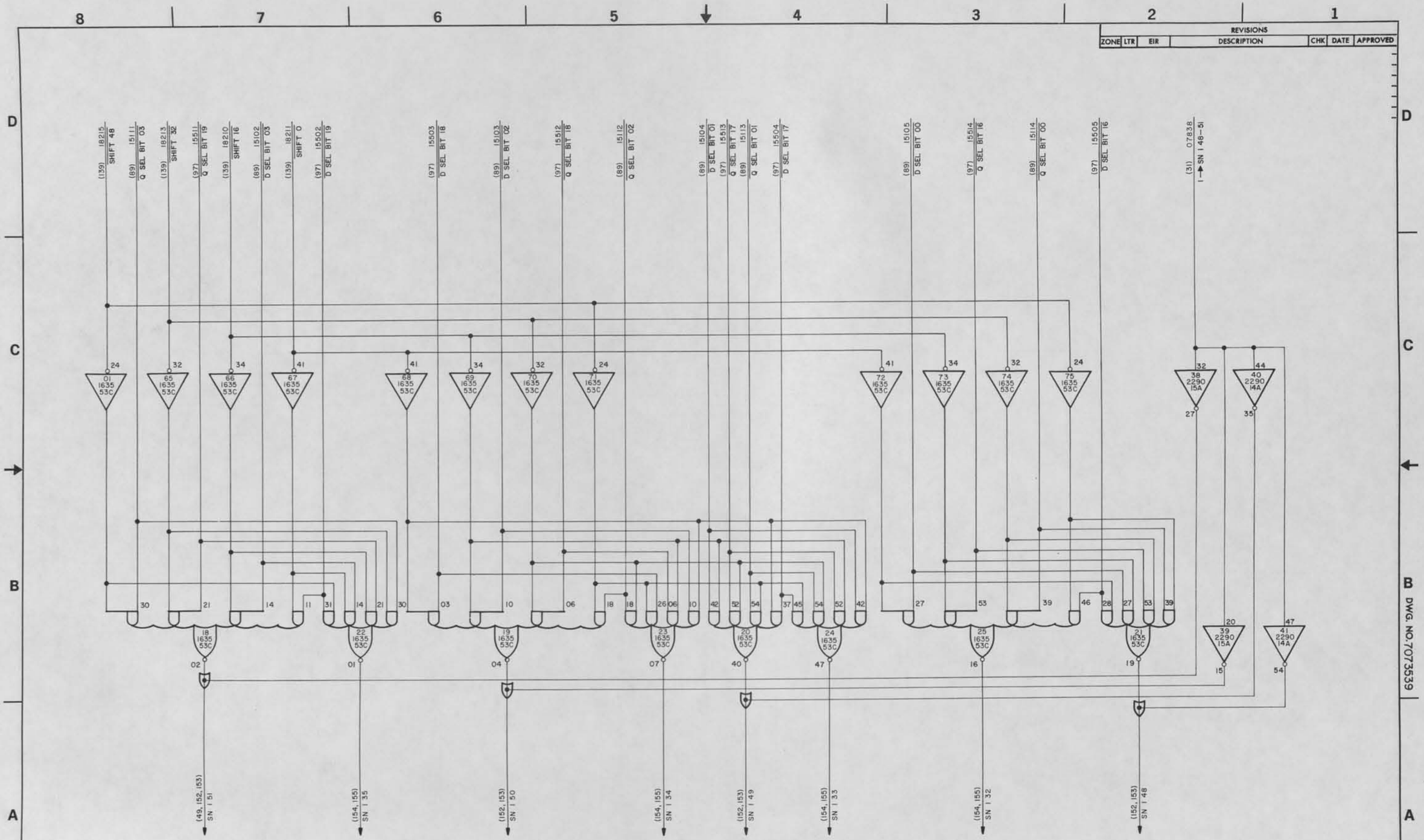

SHIFT NETWORK 1, PART 3 | 183

SIZE	CODE IDENT	DWG NO.
D	90536	7073539
SCALE	CLASS A	SHEET 42

UD 1-8534C

REVISIONS						
ZONE	LTR	EIR	DESCRIPTION	CHK	DATE	APPROVED

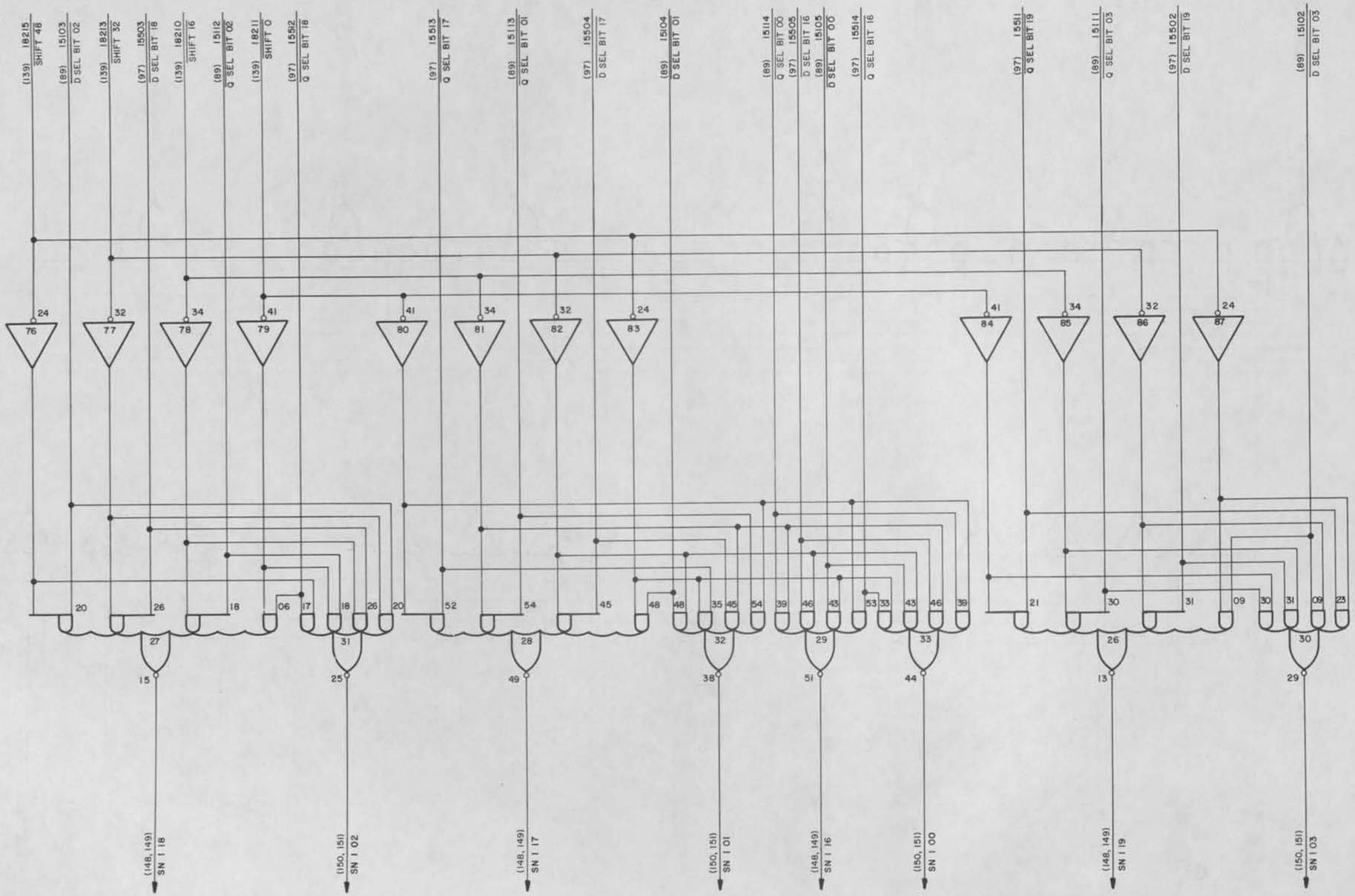

NOTES:
1. CARD TYPE – 1635
2. CARD LOCATION – 53C

SHIFT NETWORK 1, PART 4 | 183

SIZE	CODE IDENT	DWG NO.
D	90536	7073539
SCALE	CLASS A	SHEET 143

DWG. NO. 7073539

UD 1-8534C

REVISIONS						
ZONE	LTR	EIR	DESCRIPTION	CHK	DATE	APPROVED

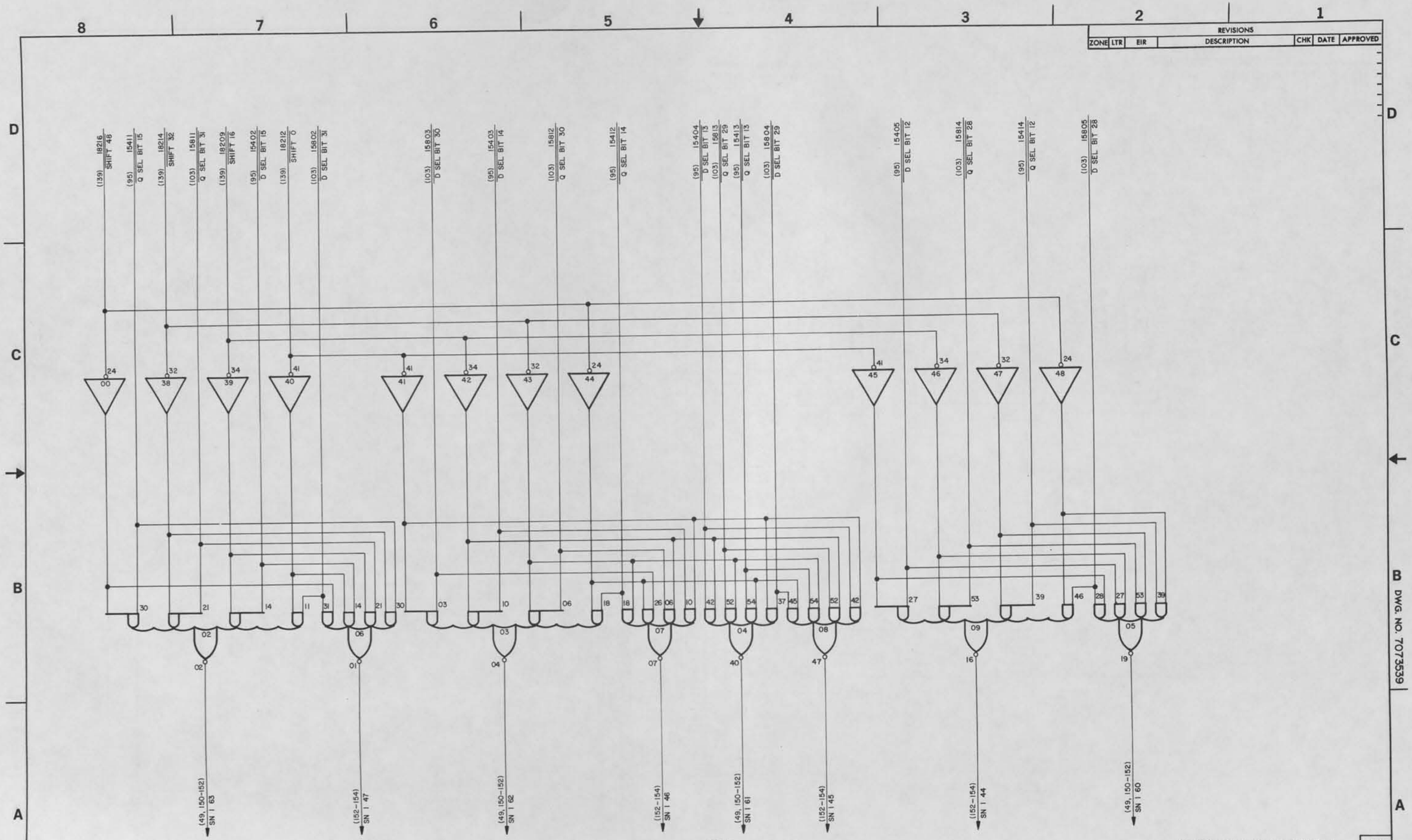

NOTES:
1. CARD TYPE—1635
2. CARD LOCATION—50C

SHIFT NETWORK I, PART 5 | 184

SIZE	CODE IDENT	DWG NO.
D	90536	7073539
SCALE	CLASS A	SHEET 144

DWG. NO. 7073539

UD 1-8534C

REVISIONS						
ZONE	LTR	EIR	DESCRIPTION	CHK	DATE	APPROVED

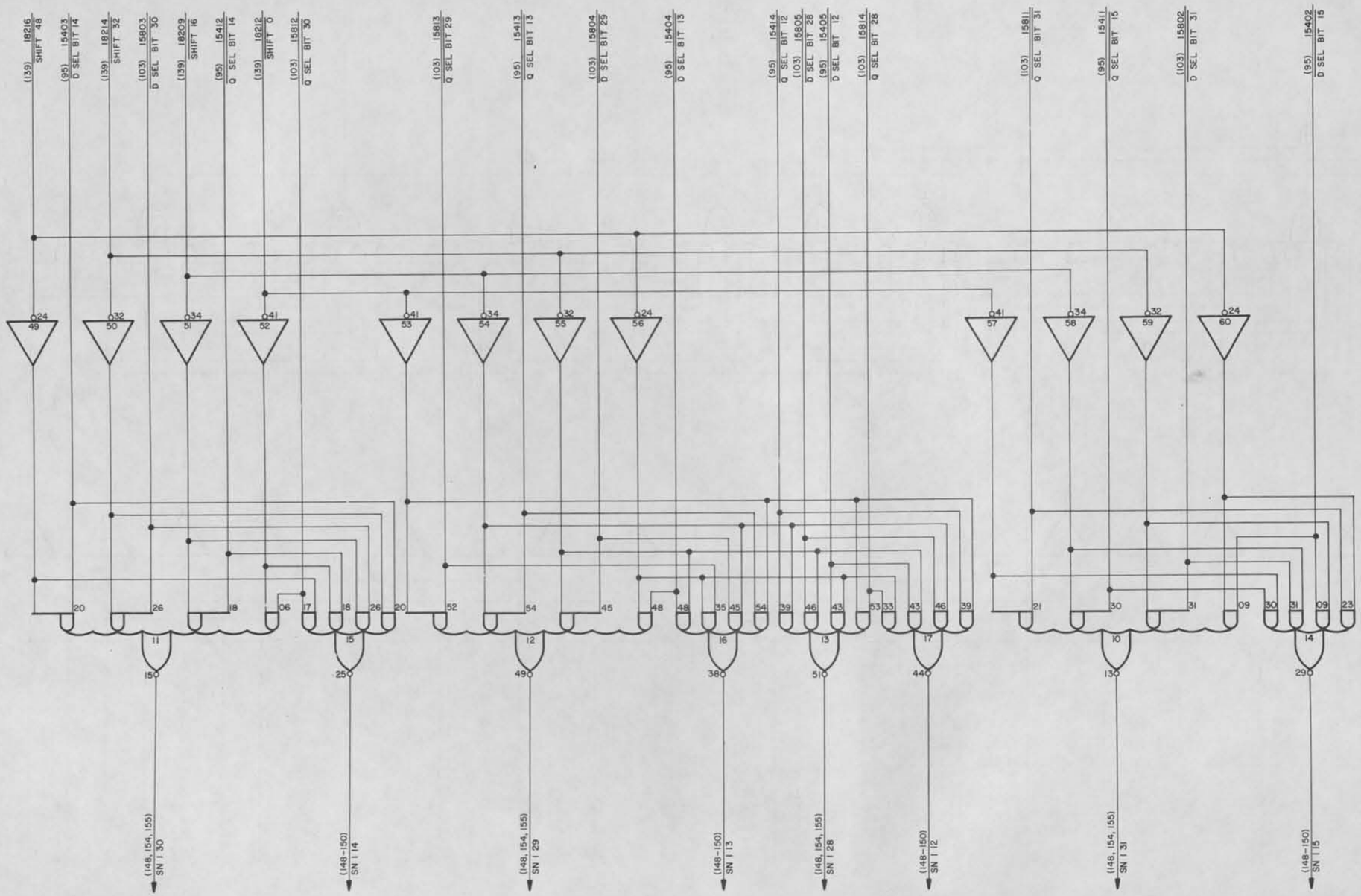

NOTES:
1. CARD TYPE - 1635
2. CARD LOCATION - 50C

SHIFT NETWORK I, PART 6 | 184

SIZE	CODE IDENT	DWG NO.
D	90536	7073539
SCALE	CLASS A	SHEET 45

DWG. NO. 7073539

UD 1-2534C

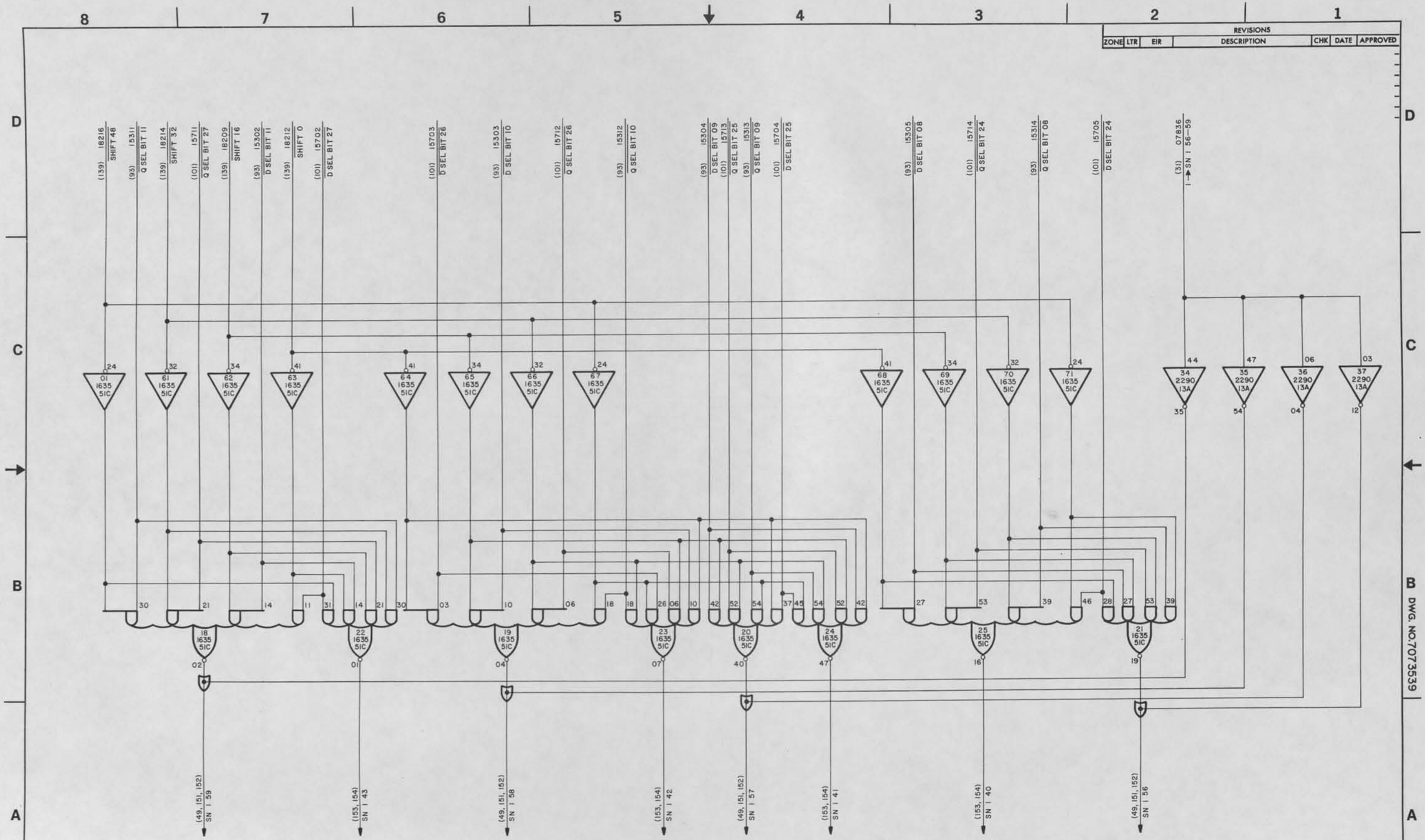

SHIFT NETWORK 1, PART 7 | 184

SIZE	CODE IDENT	DWG NO.
D	90536	7073539
SCALE	CLASS A	SHEET 46

UD 1-9534C

REVISIONS						
ZONE	LTR	EIR	DESCRIPTION	CHK	DATE	APPROVED

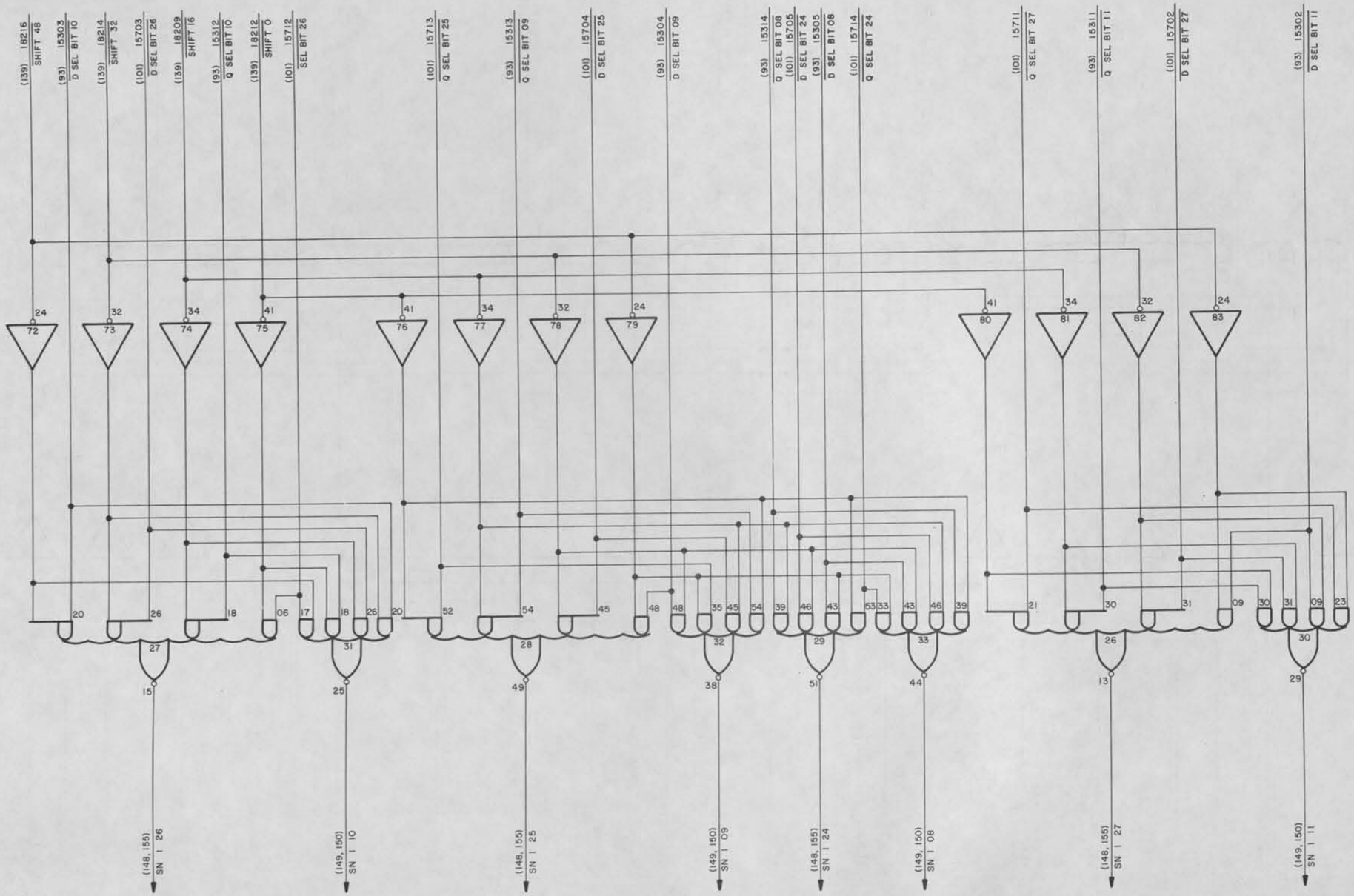

NOTES:
1. CARD TYPE – 1635
2. CARD LOCATION – 51C

SHIFT NETWORK 1, PART 8 | 184

SIZE	CODE IDENT	DWG NO.
D	90536	7073539
SCALE	CLASS A	SHEET 147

DWG. NO. 7073539

UD 1-8534C

REVISIONS						
ZONE	LTR	EIR	DESCRIPTION	CHK	DATE	APPROVED

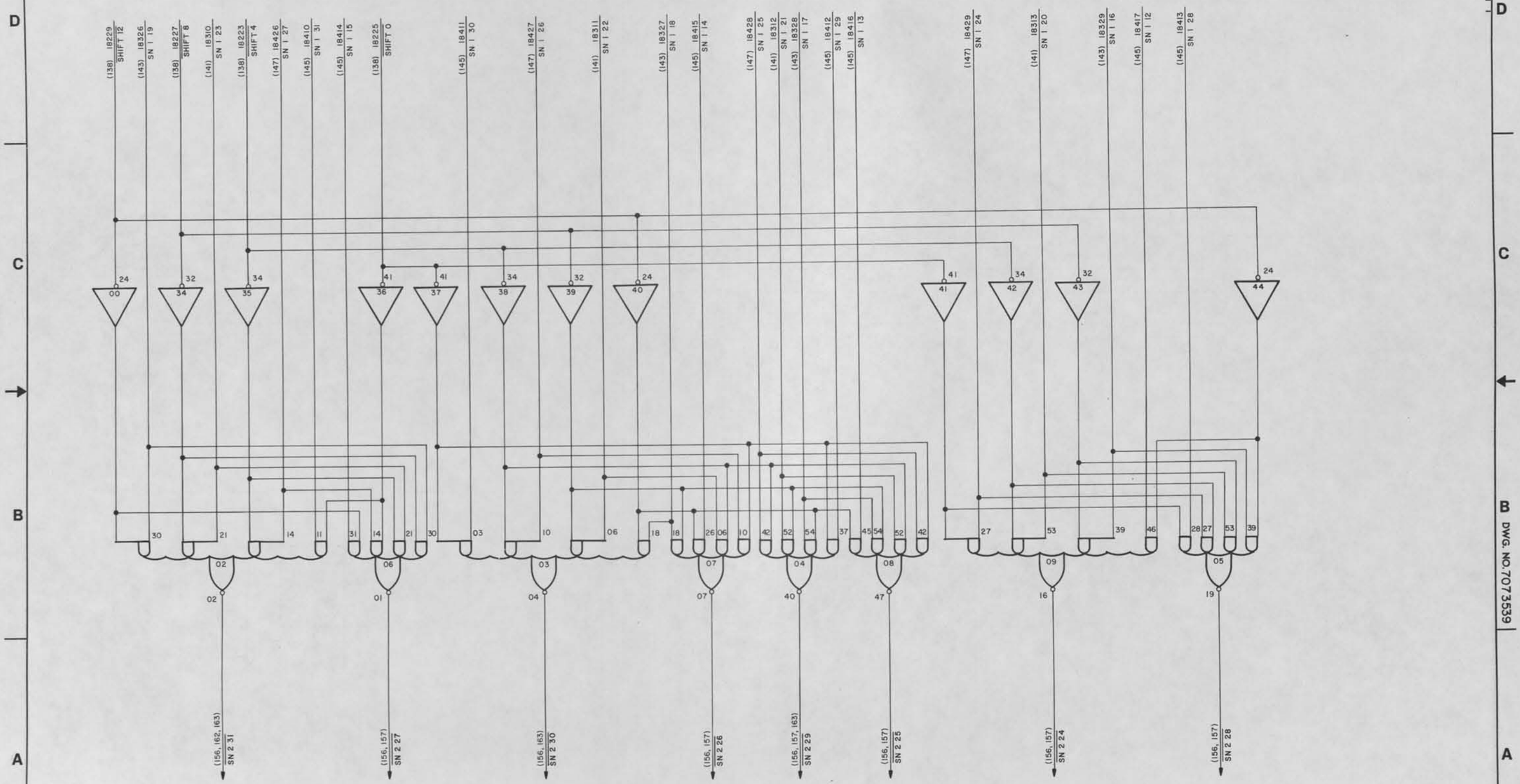

NOTES:
1. CARD TYPE — 1635
2. CARD LOCATION — 47C

SHIFT NETWORK 2, PART 1 | 185

SIZE	CODE IDENT	DWG NO.
D	90536	7073539
SCALE	CLASS A	SHEET 48

DWG. NO. 7073539

UD 1-3534C

REVISIONS						
ZONE	LTR	EIR	DESCRIPTION	CHK	DATE	APPROVED

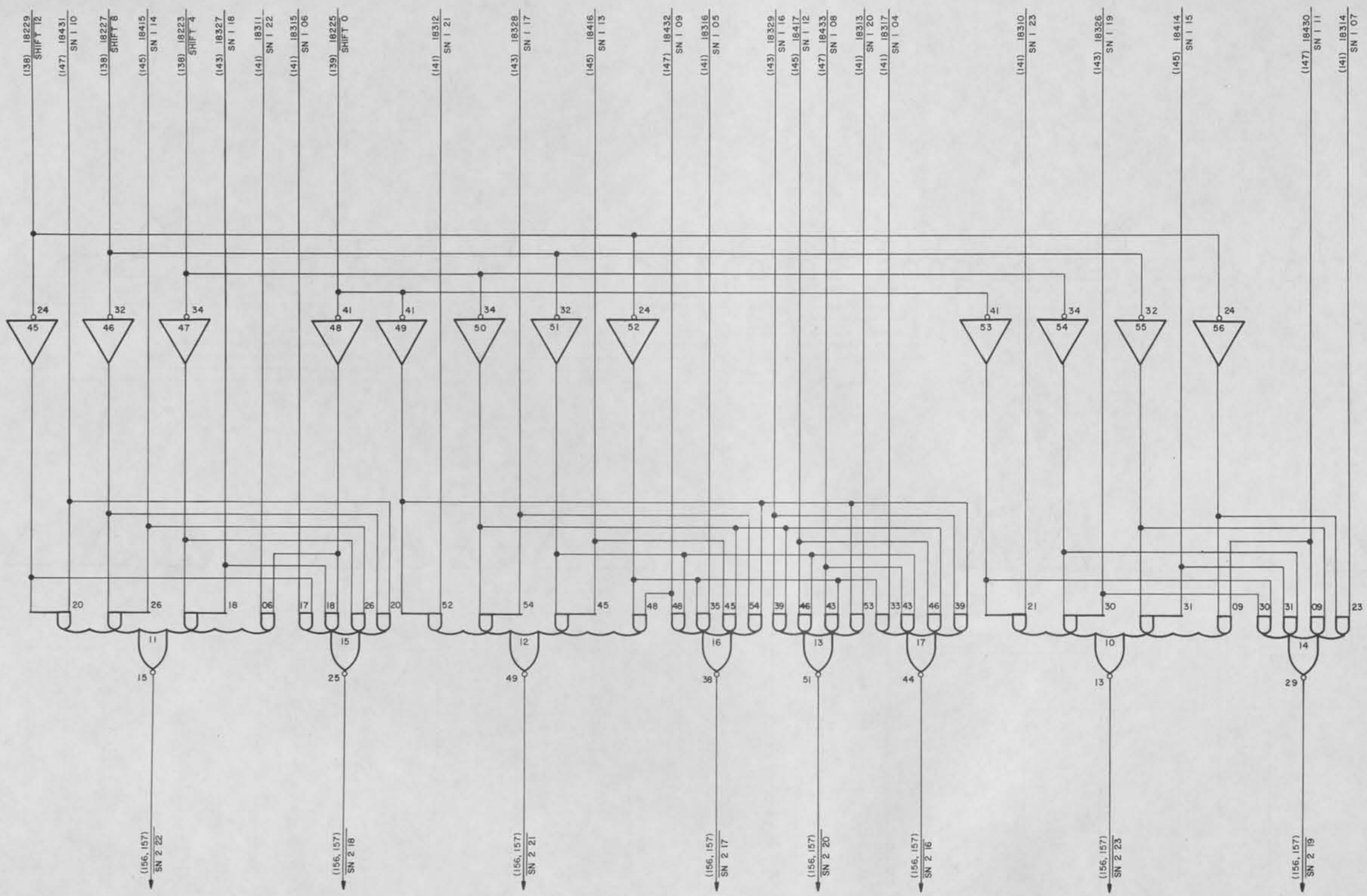

NOTES:
1. CARD TYPE—1635
2. CARD LOCATION—47C

SHIFT NETWORK 2, PART 2 | 185

SIZE	CODE IDENT	DWG NO.
D	90536	7073539
SCALE	CLASS A	SHEET 49

DWG. NO. 7073539

UD 1-2534C

REVISIONS						
ZONE	LTR	EIR	DESCRIPTION	CHK	DATE	APPROVED

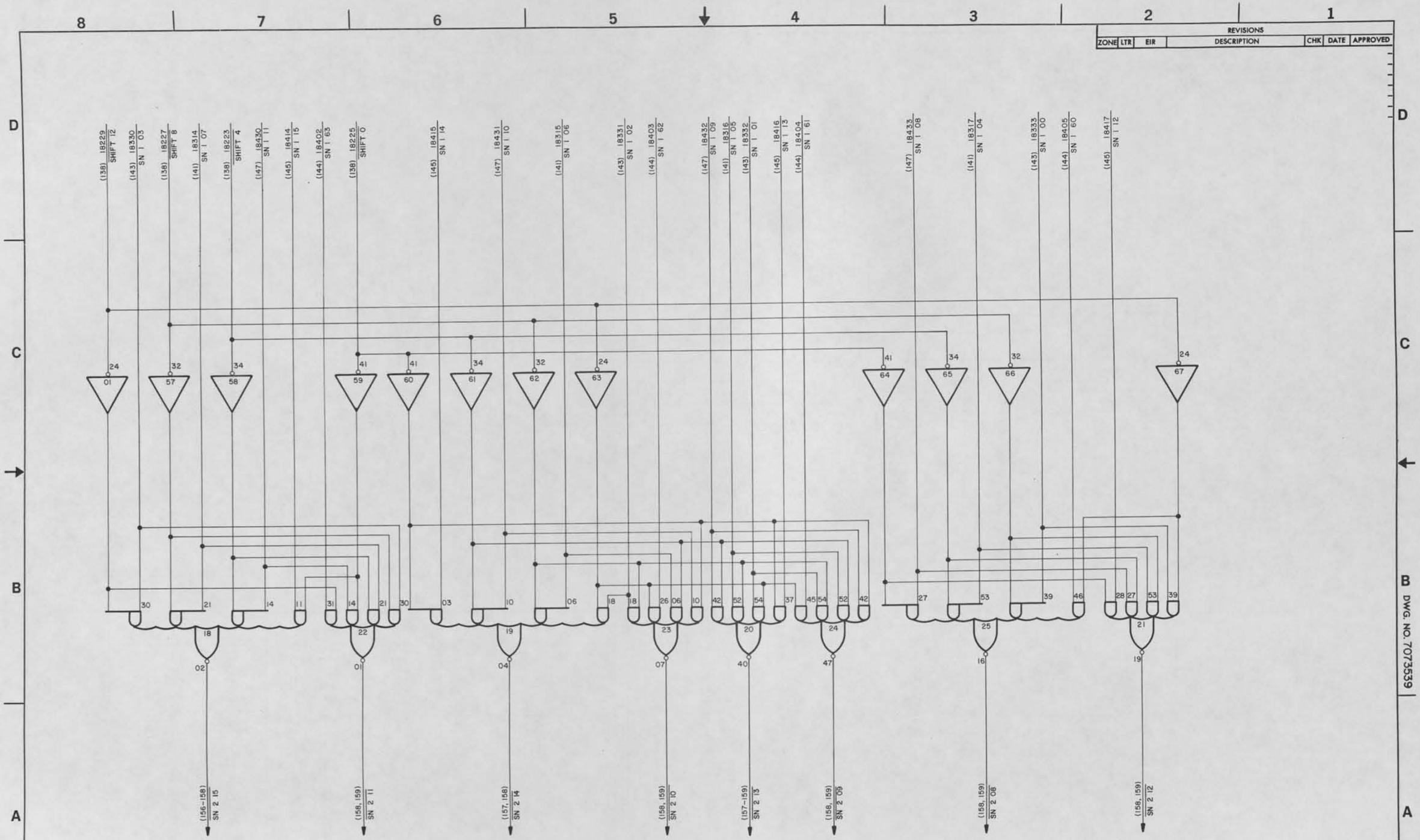

NOTES:
1. CARD TYPE - 1635
2. CARD LOCATION - 48C

SHIFT NETWORK 2, PART 3 | 185

SIZE	CODE IDENT	DWG NO.
D	90536	7073539
SCALE	CLASS A	SHEET 150

DWG. NO. 7073539

UD 1-8534C

REVISIONS						
ZONE	LTR	EIR	DESCRIPTION	CHK	DATE	APPROVED

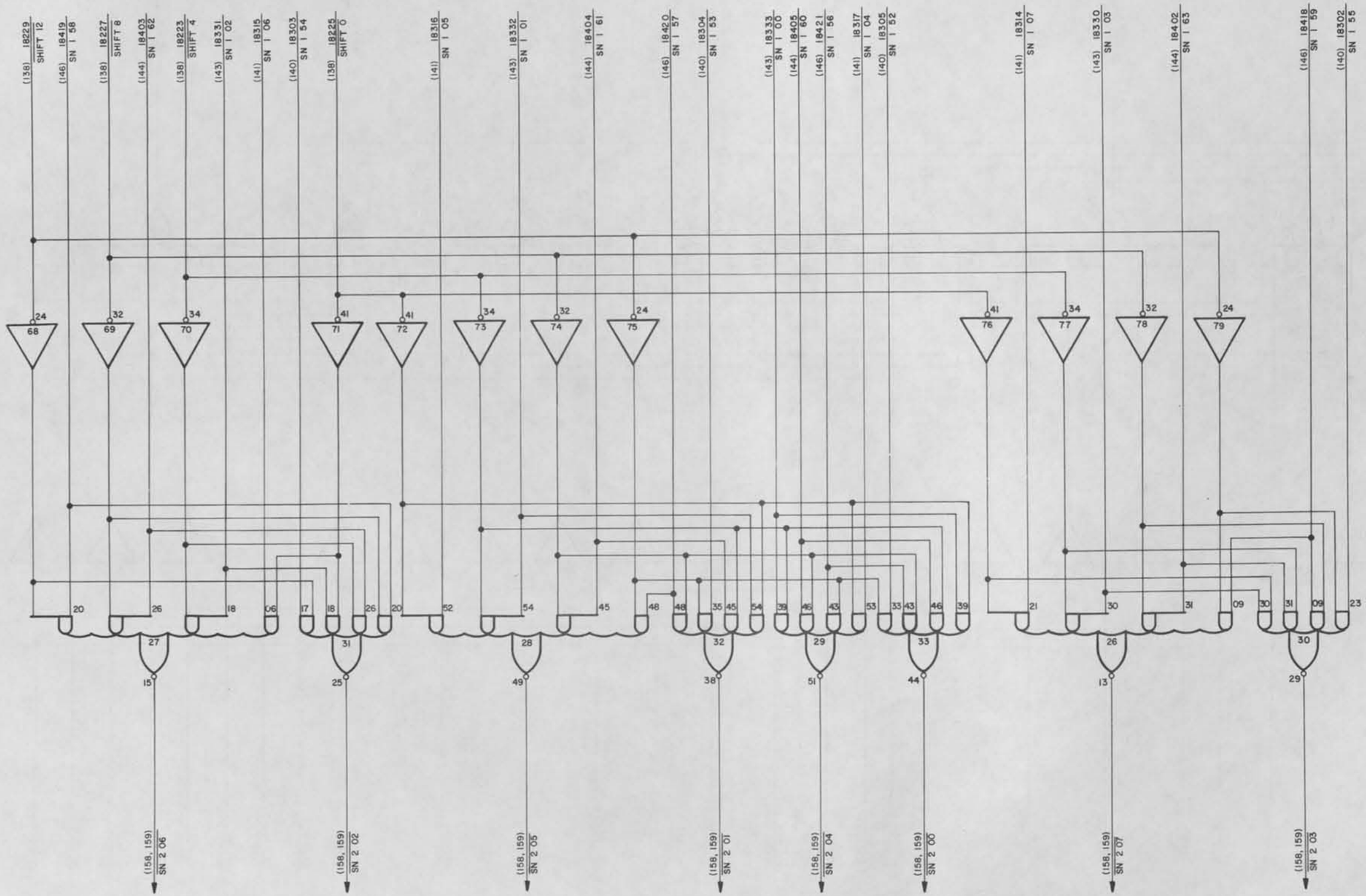

NOTES:
1. CARD TYPE—1635
2. CARD LOCATION—48C

SHIFT NETWORK 2, PART 4 | 185

SIZE	CODE IDENT	DWG NO.
D	90536	7073539
SCALE	CLASS A	SHEET 5

DWG. NO. 7073539

UD 1-8534C

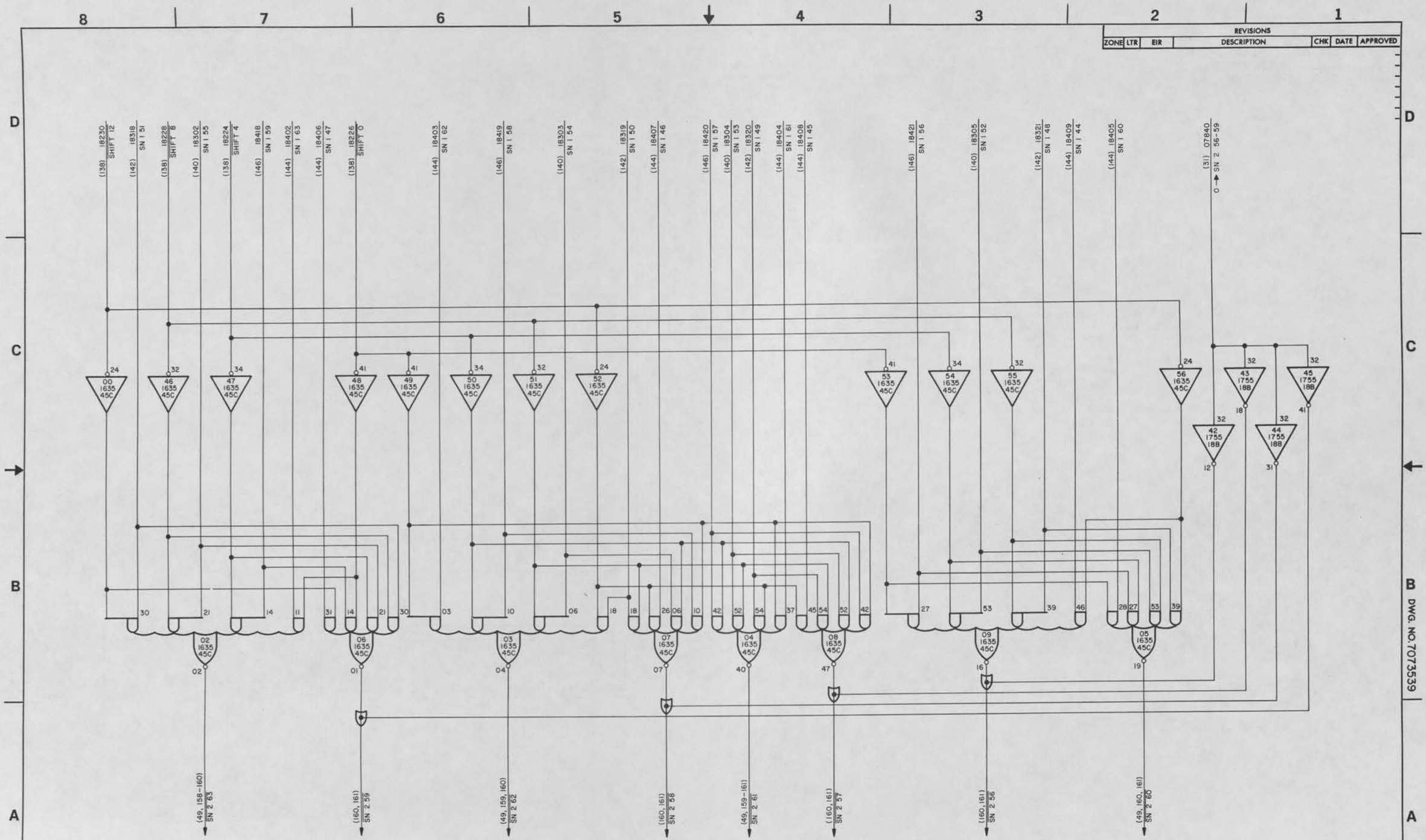

SHIFT NETWORK 2, PART 5 | 186

SIZE	CODE IDENT	DWG NO.
D	90536	7073539
SCALE	CLASS A	SHEET 152

UD 1-3534C

REVISIONS						
ZONE	LTR	EIR	DESCRIPTION	CHK	DATE	APPROVED

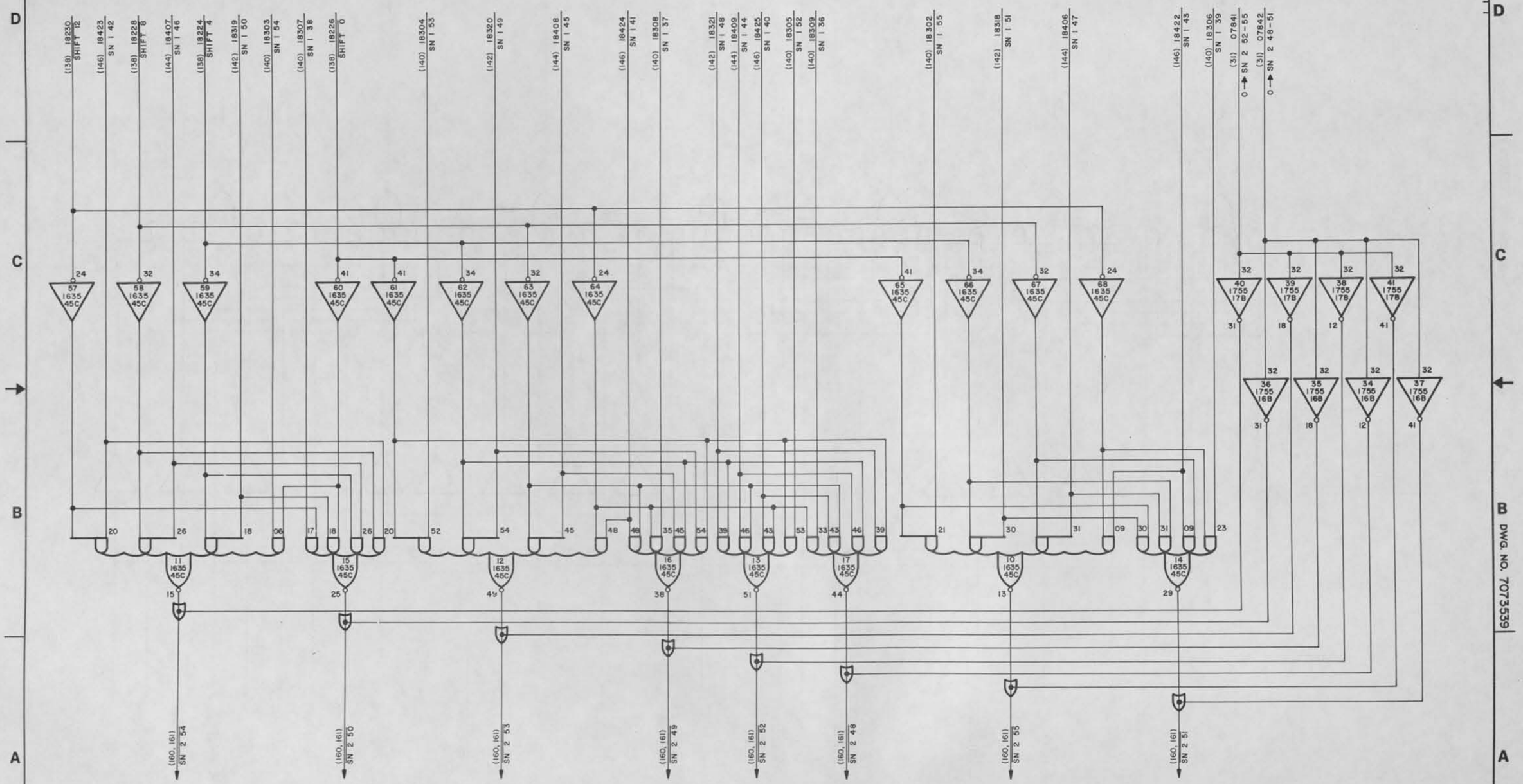

DWG. NO. 7073539

SHIFT NETWORK 2, PART 6 | 186

SIZE	CODE IDENT	DWG NO.
D	90536	7073539
SCALE	CLASS A	SHEET 153

UD 1-8534C

REVISIONS						
ZONE	LTR	EIR	DESCRIPTION	CHK	DATE	APPROVED

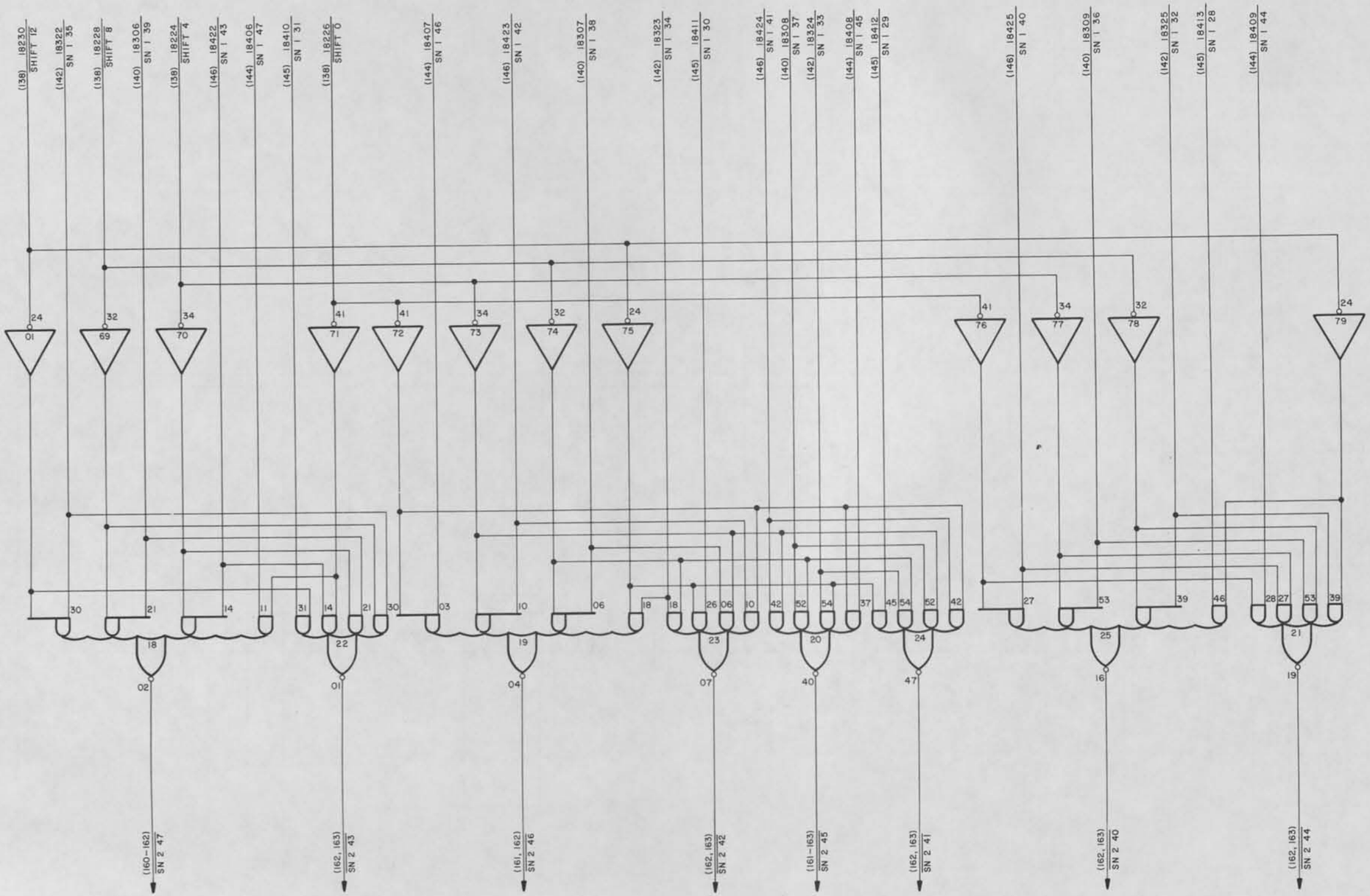

NOTES:
1. CARD TYPE – 1635
2. CARD LOCATION – 46C

SHIFT NETWORK 2, PART 7 | 186

SIZE	CODE IDENT	DWG NO.
D	90536	7073539
SCALE	CLASS A	SHEET 154

DWG. NO. 7073539

UD 1-8534C

REVISIONS						
ZONE	LTR	EIR	DESCRIPTION	CHK	DATE	APPROVED

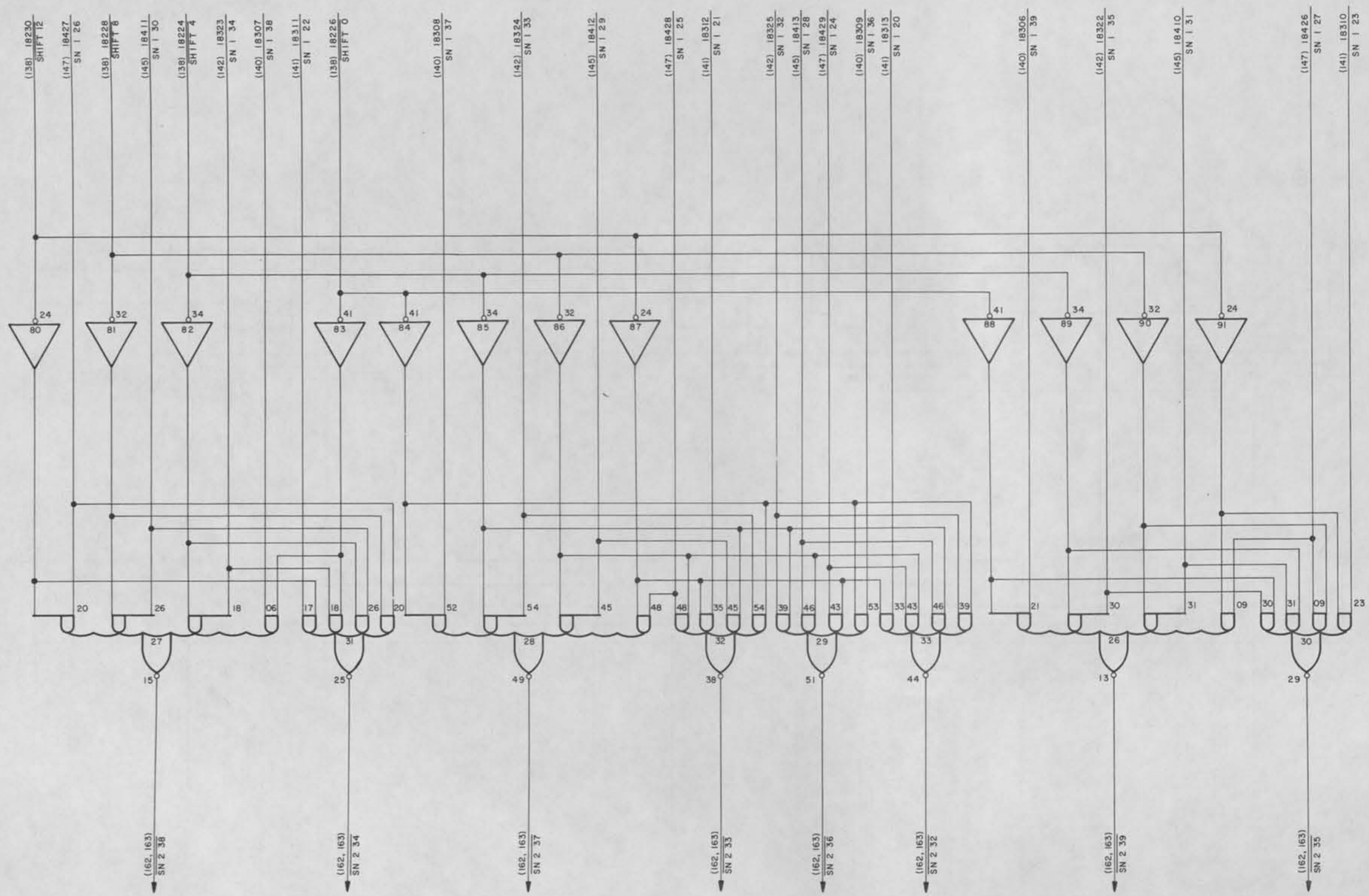

NOTES:
1. CARD TYPE – 1635
2. CARD LOCATION – 46C

SHIFT NETWORK 2, PART 8 | 186

SIZE	CODE IDENT	DWG NO.
D	90536	7073539
SCALE	CLASS A	SHEET 155

DWG. NO. 7073539

UD 1-9534C

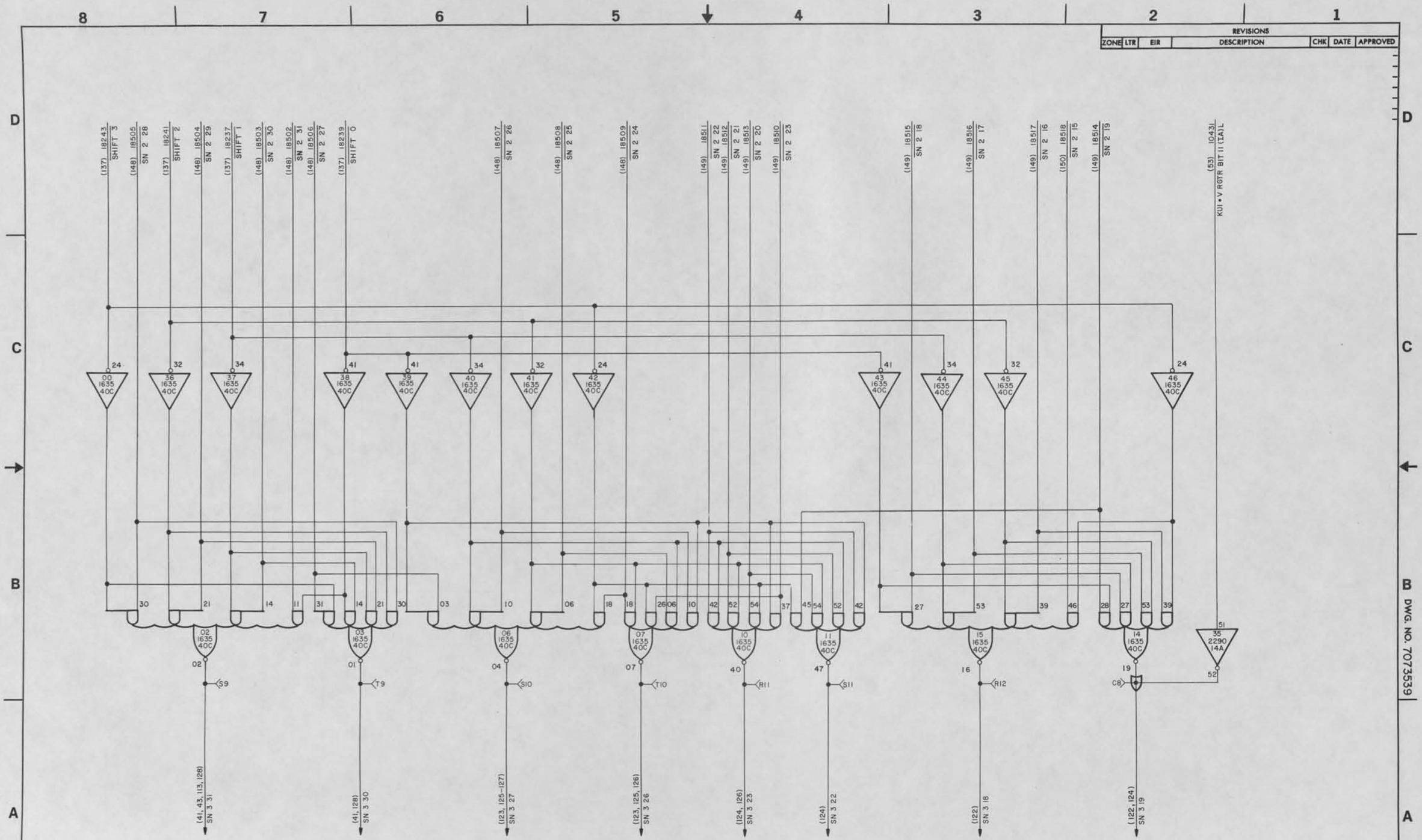

SHIFT NETWORK 3, PART I

187

SIZE	CODE IDENT	DWG NO.
D	90536	7073539
SCALE	CLASS A	SHEET 156

UD 1-8534C

REVISIONS						
ZONE	LTR	EIR	DESCRIPTION	CHK	DATE	APPROVED

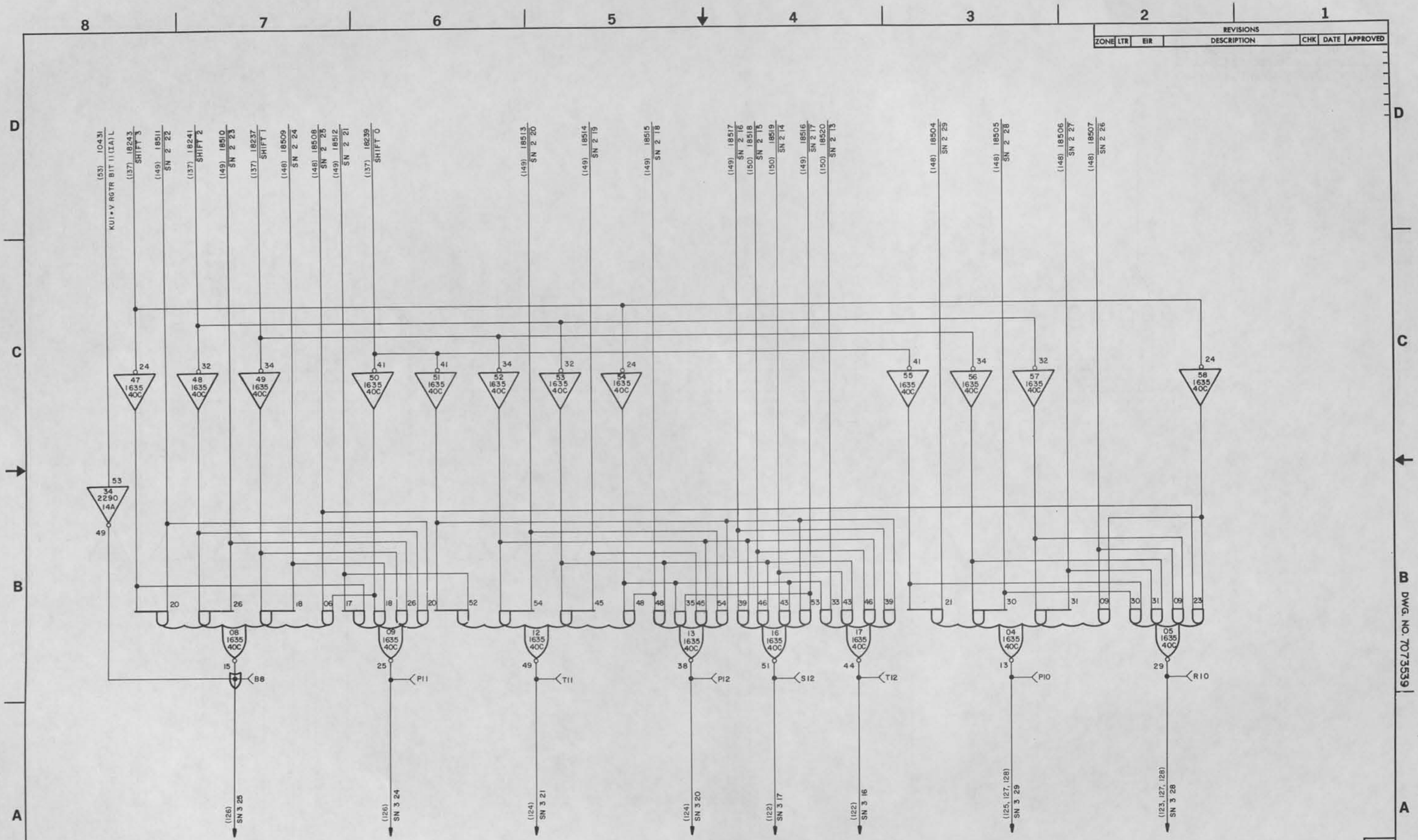

SHIFT NETWORK 3, PART 2 | 187

SIZE	CODE IDENT	DWG NO.
D	90536	7073539
SCALE	CLASS A	SHEET 157

DWG. NO. 7073539

UD 1-8534C

REVISIONS						
ZONE	LTR	EIR	DESCRIPTION	CHK	DATE	APPROVED

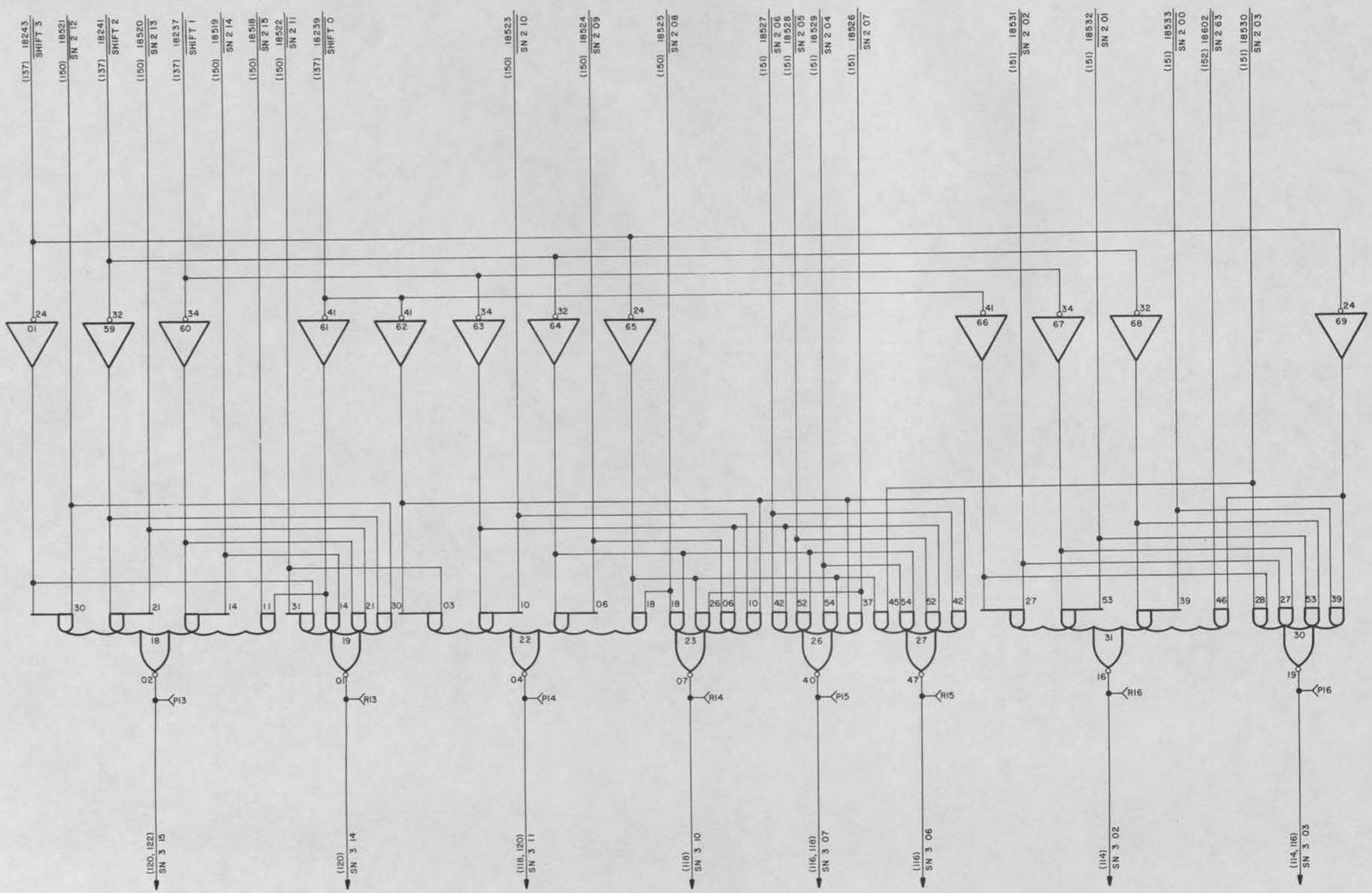

NOTES:
1. CARD TYPE — 1635
2. CARD LOCATION — 41C

SHIFT NETWORK 3, PART 3 | 187

SIZE	CODE IDENT	DWG NO.
D	90536	7073539
SCALE	CLASS A	SHEET 158

DWG. NO. 7073539

UD 1-2534C

REVISIONS						
ZONE	LTR	EIR	DESCRIPTION	CHK	DATE	APPROVED

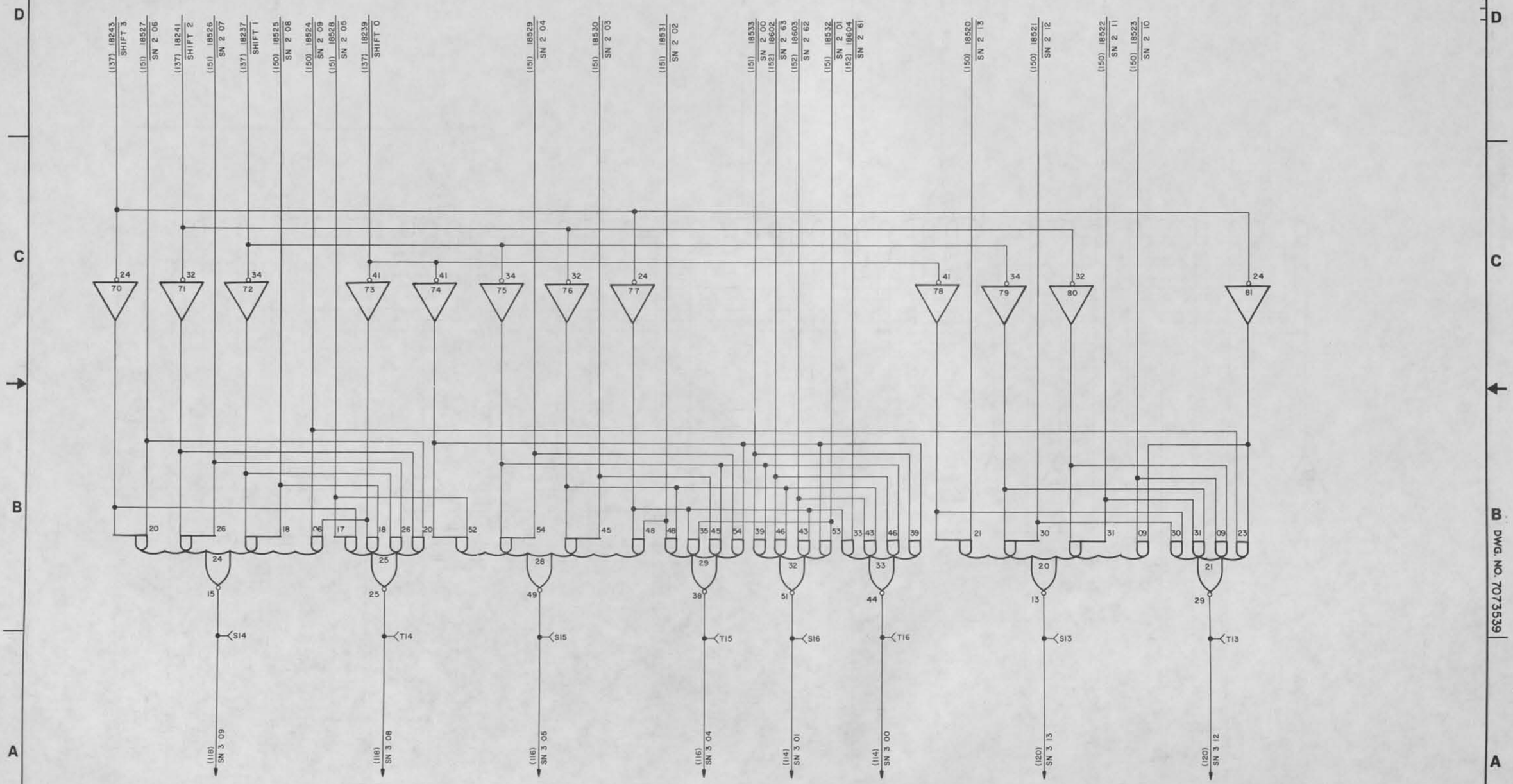

NOTES:
1. CARD TYPE—1635
2. CARD LOCATION—41C

SHIFT NETWORK 3, PART 4 | 187

SIZE	CODE IDENT	DWG NO.
D	90536	7073539
SCALE	CLASS A	SHEET 159

DWG. NO. 7073539

UD 1-8534C

REVISIONS						
ZONE	LTR	EIR	DESCRIPTION	CHK	DATE	APPROVED

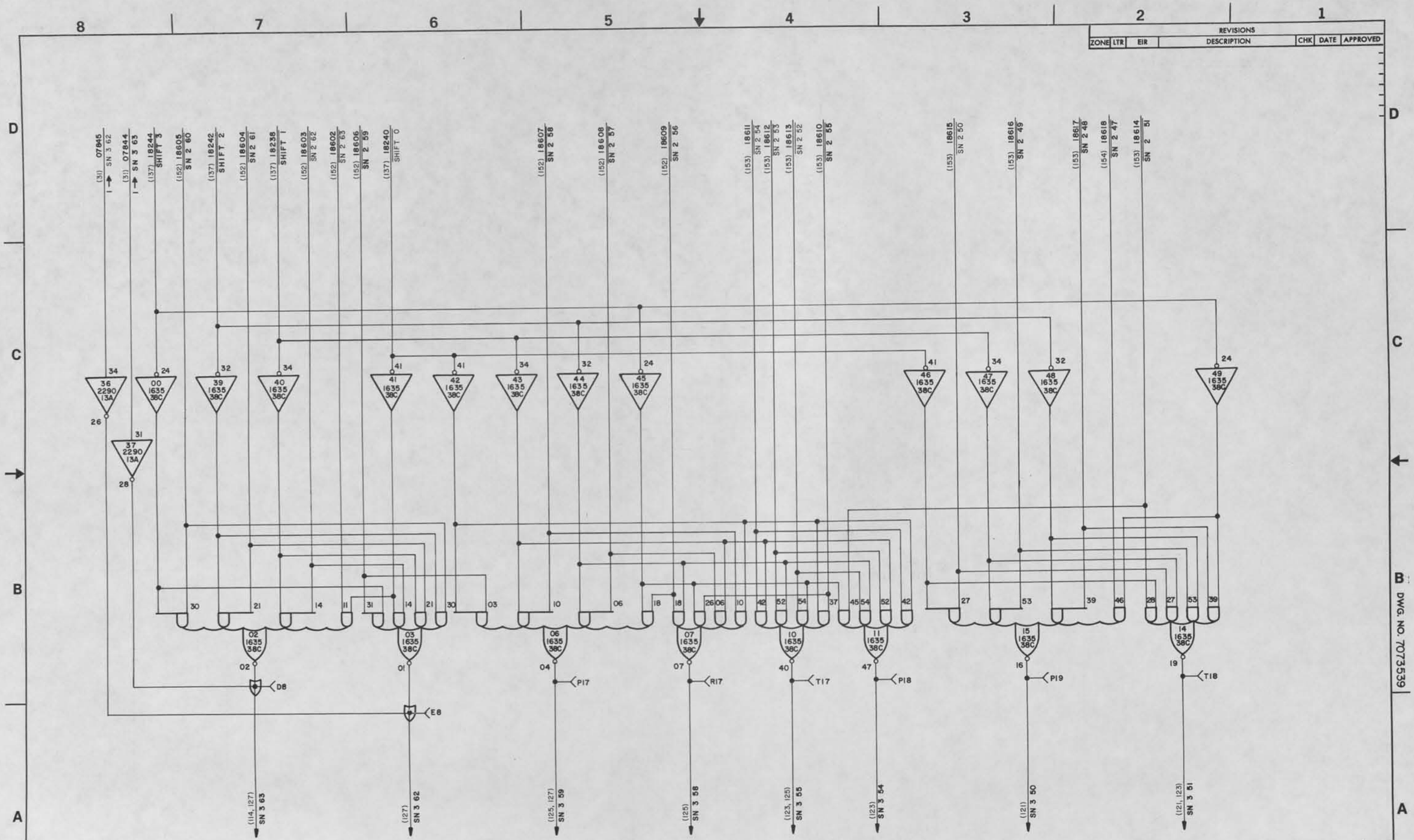

SHIFT NETWORK 3, PART 5 | 188

SIZE	CODE IDENT	DWG NO.
D	90536	7073539
SCALE	CLASS A	SHEET 160

DWG. NO. 7073539

UD 1-8534C

REVISIONS						
ZONE	LTR	EIR	DESCRIPTION	CHK	DATE	APPROVED
	AJ	D05016	SEE EIR	RJ	1-17-74	[illegible]
	CA	D06588	SEE EIR	WJ	12-13-72	[illegible]

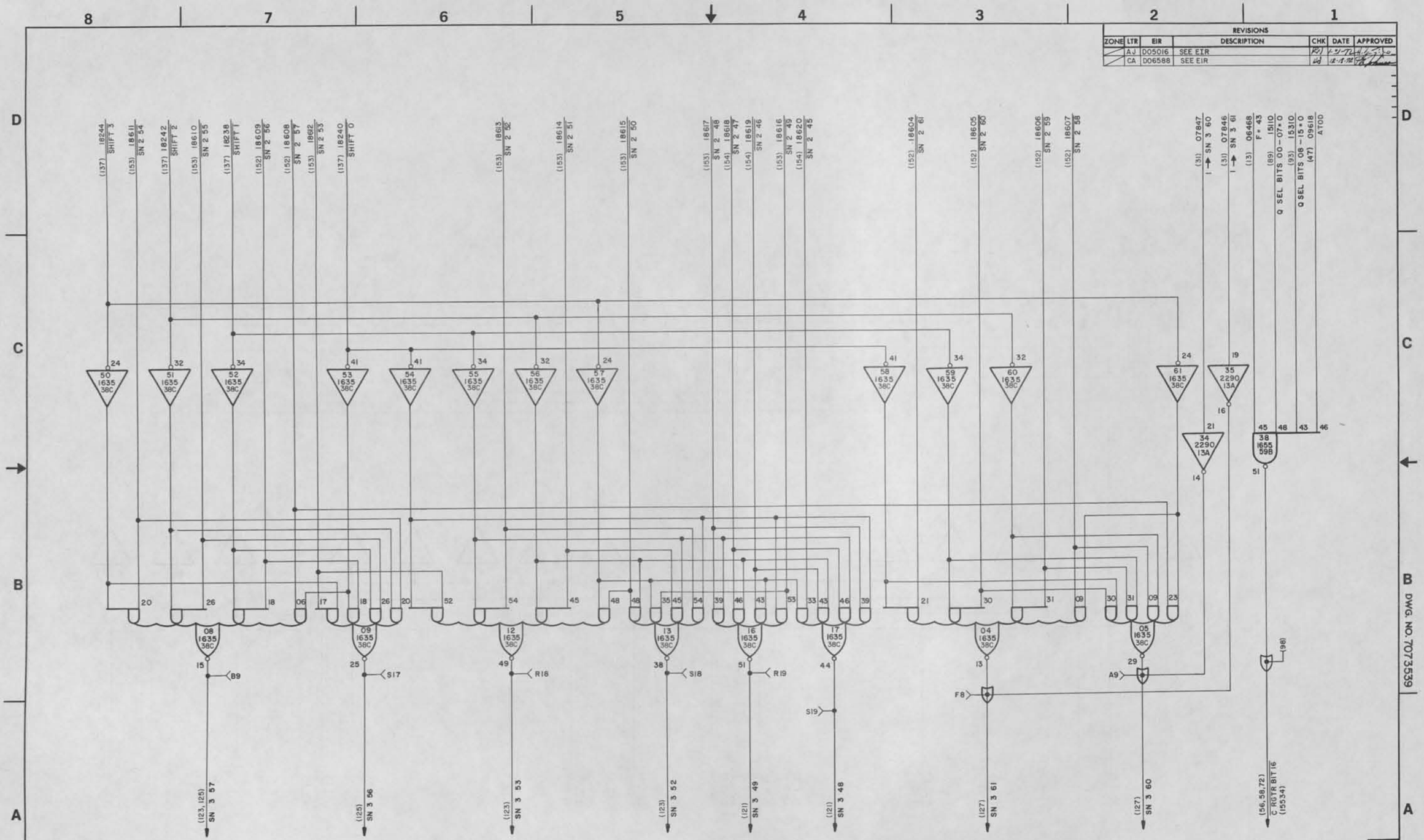

SHIFT NETWORK 3, PART 6 | 188

SIZE	CODE IDENT	DWG NO.
D	90536	7073539
SCALE	CLASS A	SHEET 161

DWG. NO. 7073539

CHANGE 2

UD 1-8534C

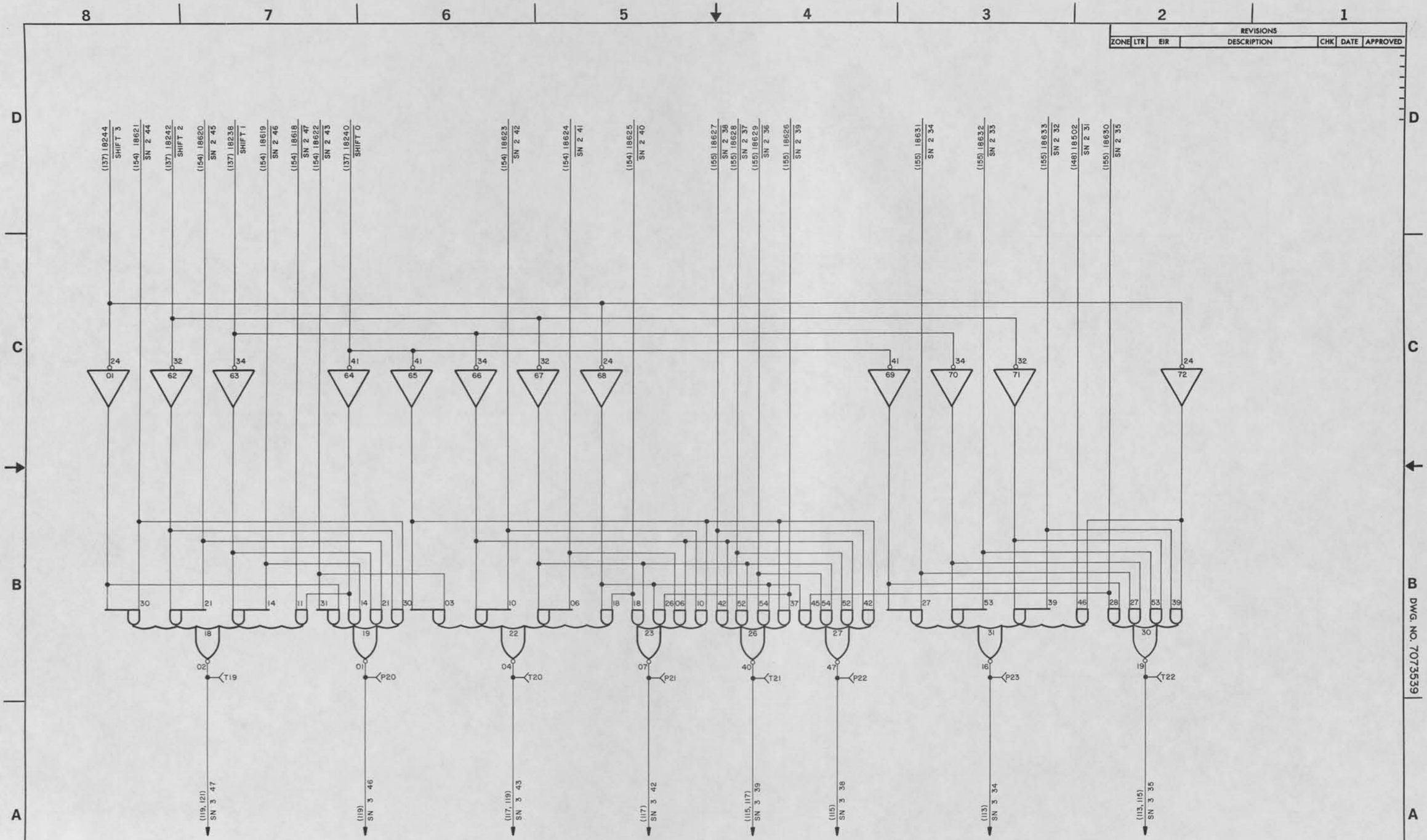

NOTES:
1. CARD TYPE - 1635
2. CARD LOCATION - 39C

REVISIONS

ZONE	LTR	EIR	DESCRIPTION	CHK	DATE	APPROVED

SHIFT NETWORK 3, PART 7 | 188

SIZE	CODE IDENT	DWG NO.
D	90536	7073539
SCALE	CLASS A	SHEET 162

DWG. NO. 7073539

UD 1-8534C

REVISIONS						
ZONE	LTR	EIR	DESCRIPTION	CHK	DATE	APPROVED

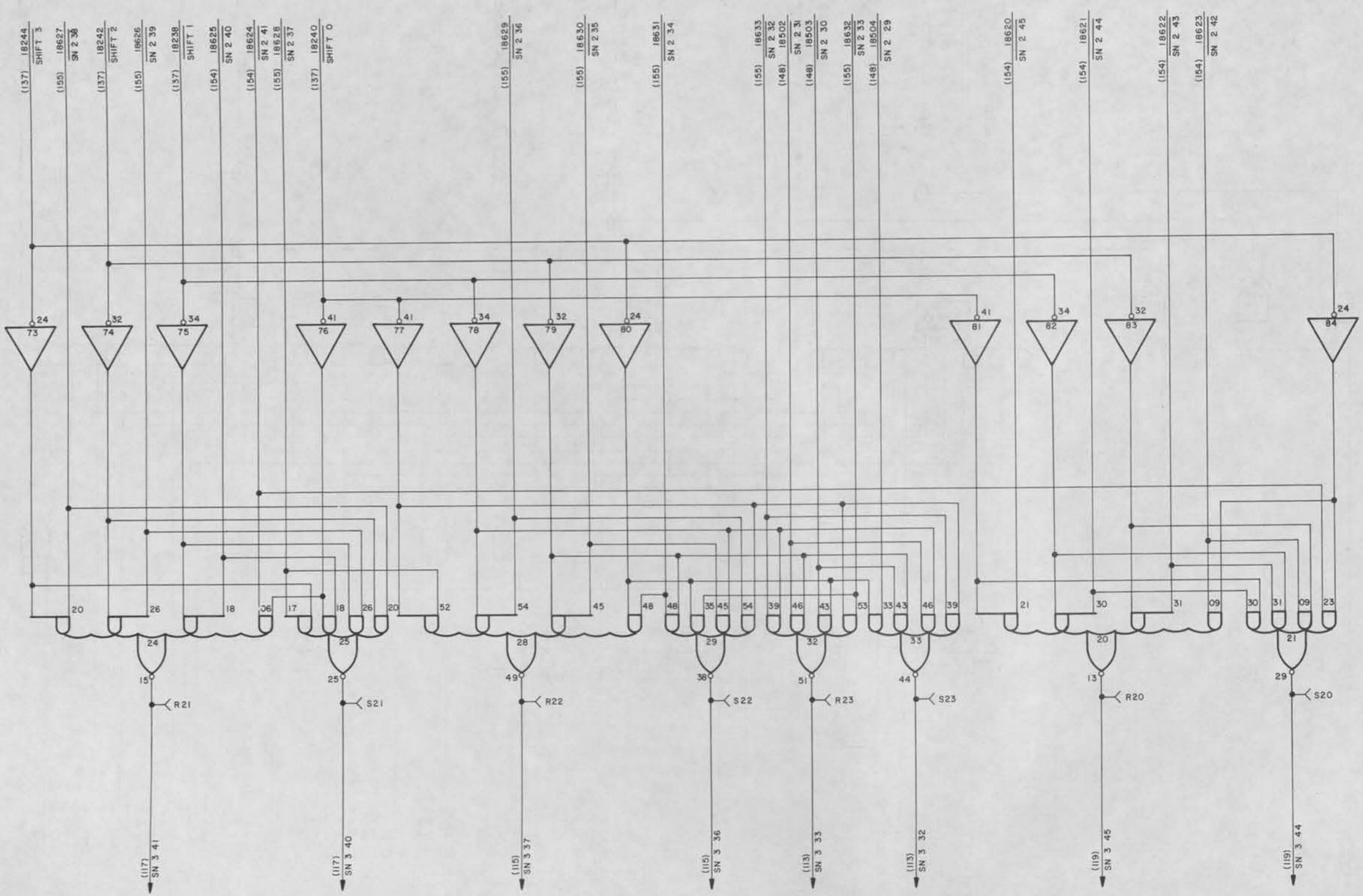

NOTES:
1. CARD TYPE – 1635
2. CARD LOCATION – 39C

SHIFT NETWORK 3, PART 8 | 188

SIZE	CODE IDENT	DWG NO.
D	90536	7073539
SCALE	CLASS A	SHEET 163

DWG. NO. 7073539

UD 1-8534C

REVISIONS						
ZONE	LTR	EIR	DESCRIPTION	CHK	DATE	APPROVED

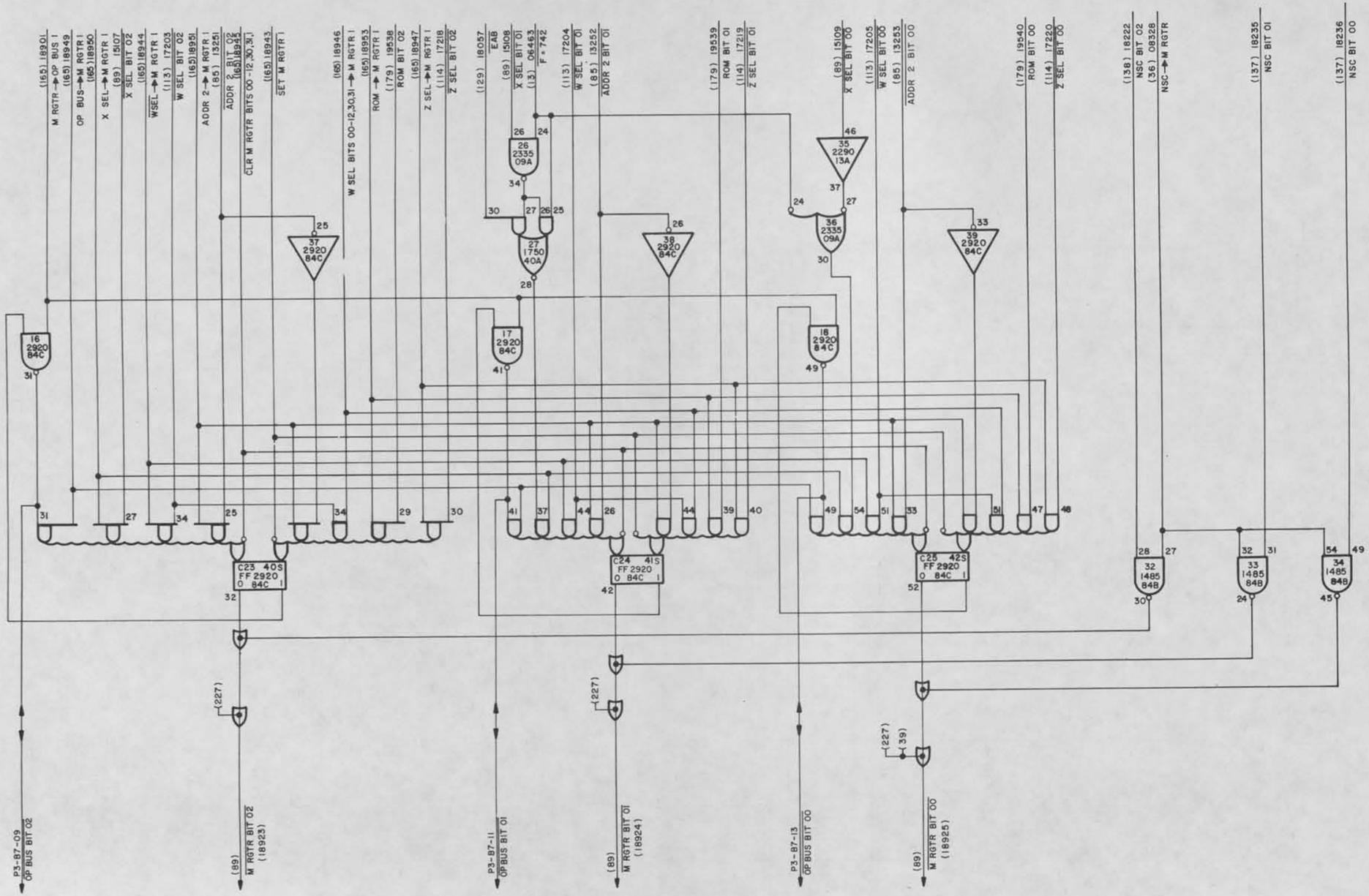

M REGISTER & OP BUS BITS ,00-02 | 189

SIZE	CODE IDENT	DWG NO.
D	90536	7073539
SCALE	CLASS A !	SHEET 164

DWG. NO. 7073539

UD 1-2534C

REVISIONS						
ZONE	LTR	EIR	DESCRIPTION	CHK	DATE	APPROVED

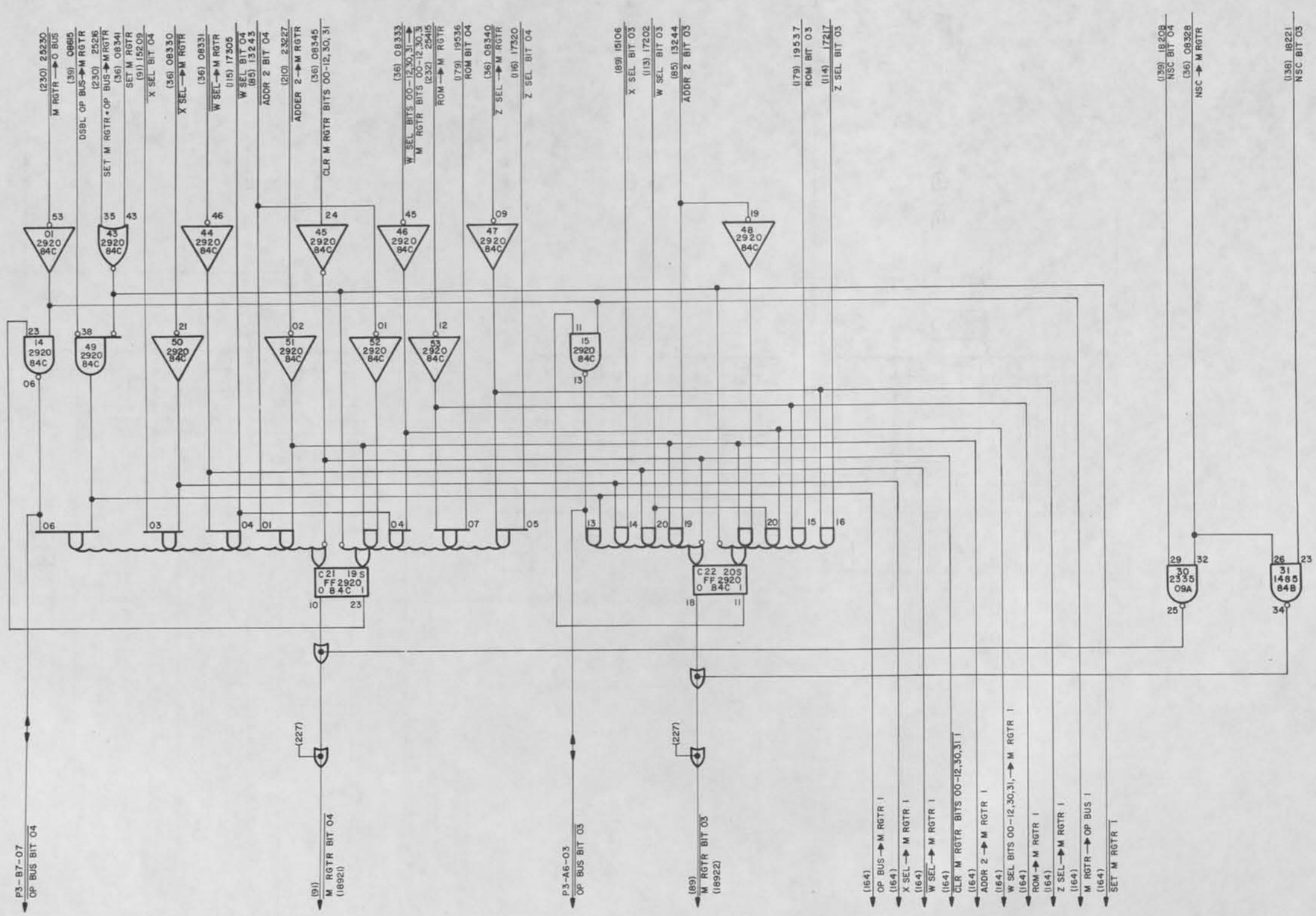

M REGISTER & OP BUS, BITS 03-04 | 189

SIZE	CODE IDENT	DWG NO.
D	90536	7073539
SCALE	CLASS A	SHEET 65

DWG. NO. 7073539

UD 1-8534C

REVISIONS						
ZONE	LTR	EIR	DESCRIPTION	CHK	DATE	APPROVED

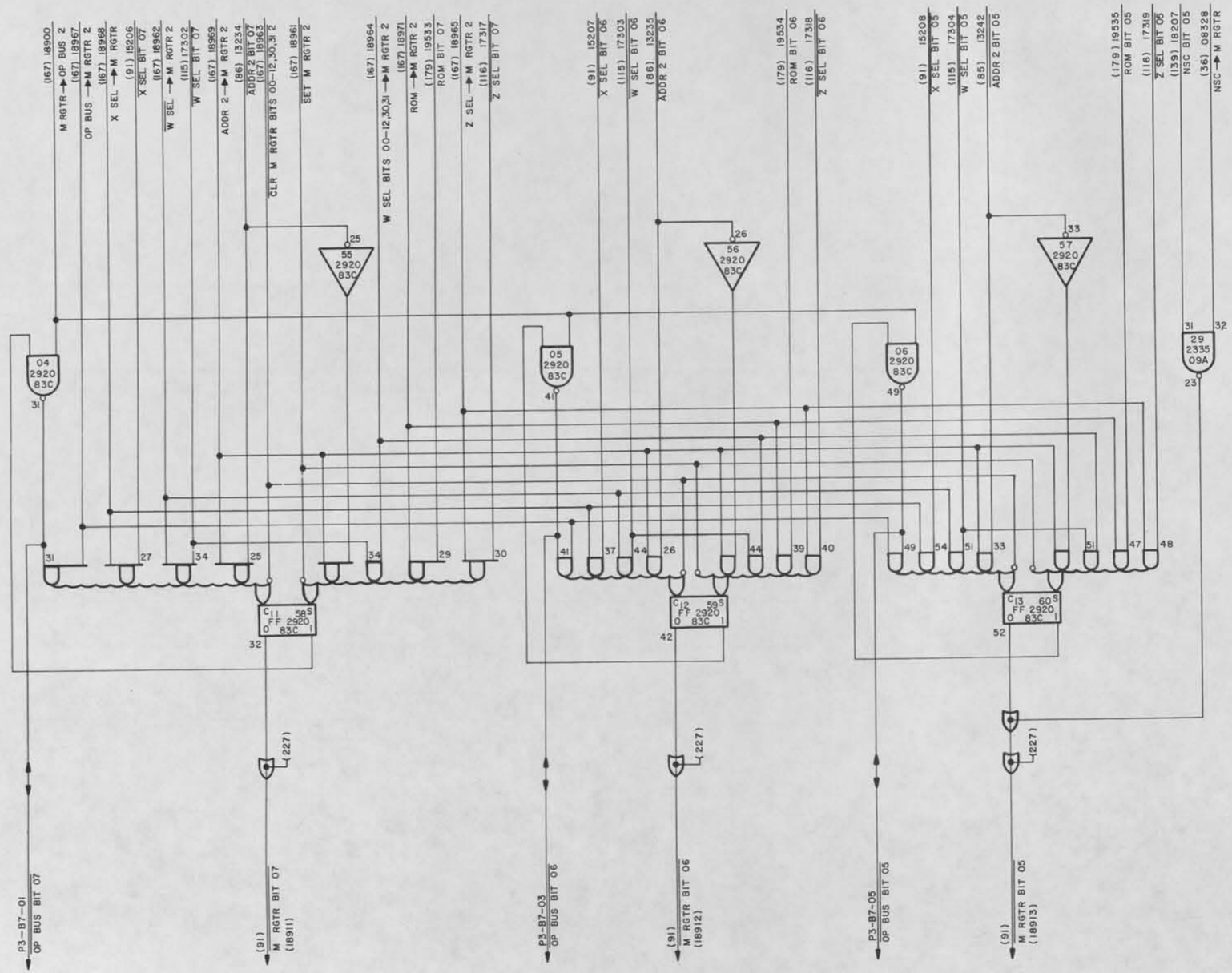

M REGISTER & OP BUS, BITS 05-07 | 189

SIZE	CODE IDENT	DWG NO.
D	90536	7073539
SCALE	CLASS A	SHEET 66

DWG. NO. 7073539

UD 1-2534C

REVISIONS						
ZONE	LTR	EIR	DESCRIPTION	CHK	DATE	APPROVED

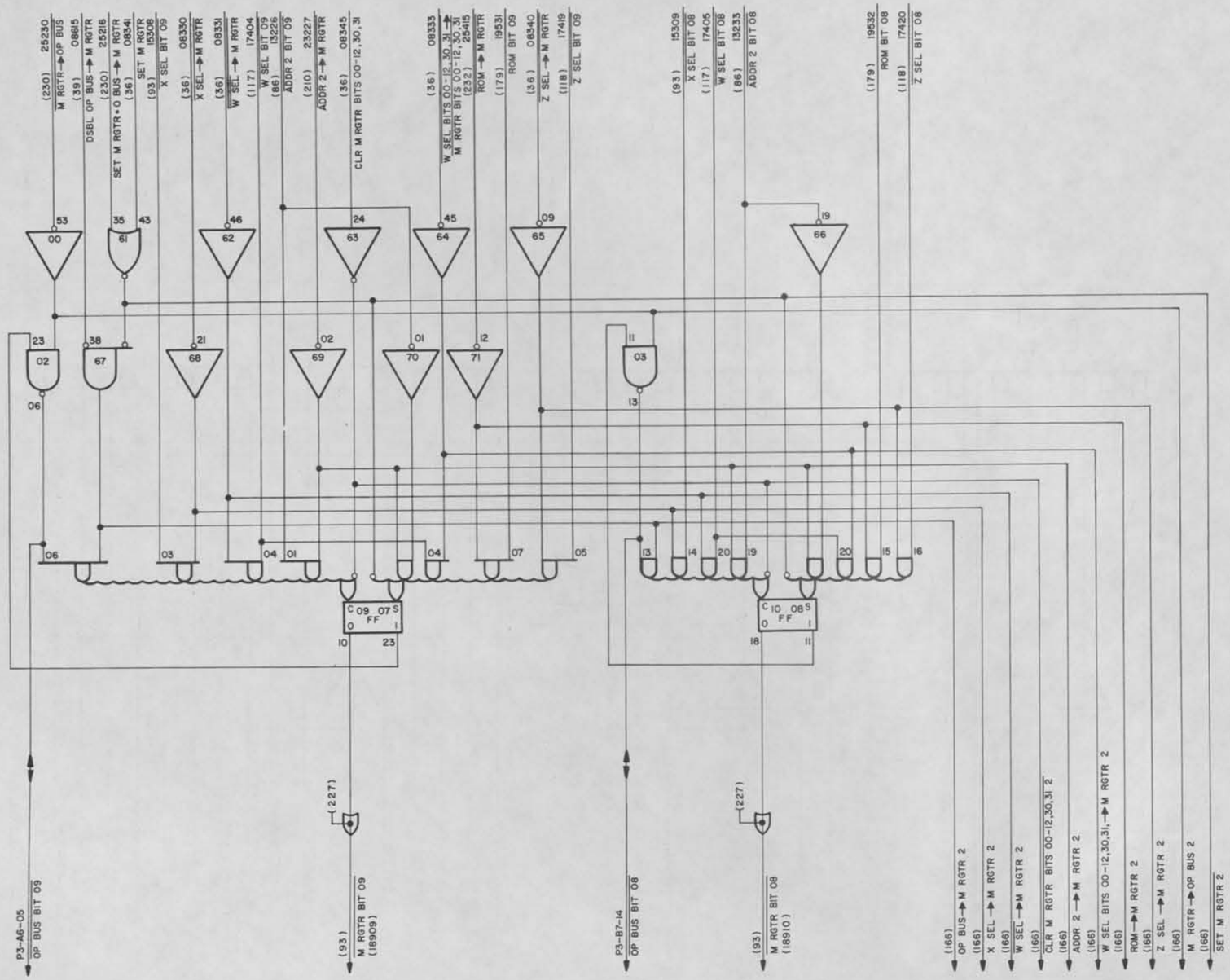

NOTES:
1. CARD TYPE — 2920
2. CARD LOCATION — 83C

M REGISTER & OP BUS, BITS 08 – 09 | 189

SIZE	CODE IDENT	DWG NO.
D	90536	7073539
SCALE	CLASS A	SHEET 67

DWG. NO. 7073539

UD 1-8534C

REVISIONS						
ZONE	LTR	EIR	DESCRIPTION	CHK	DATE	APPROVED

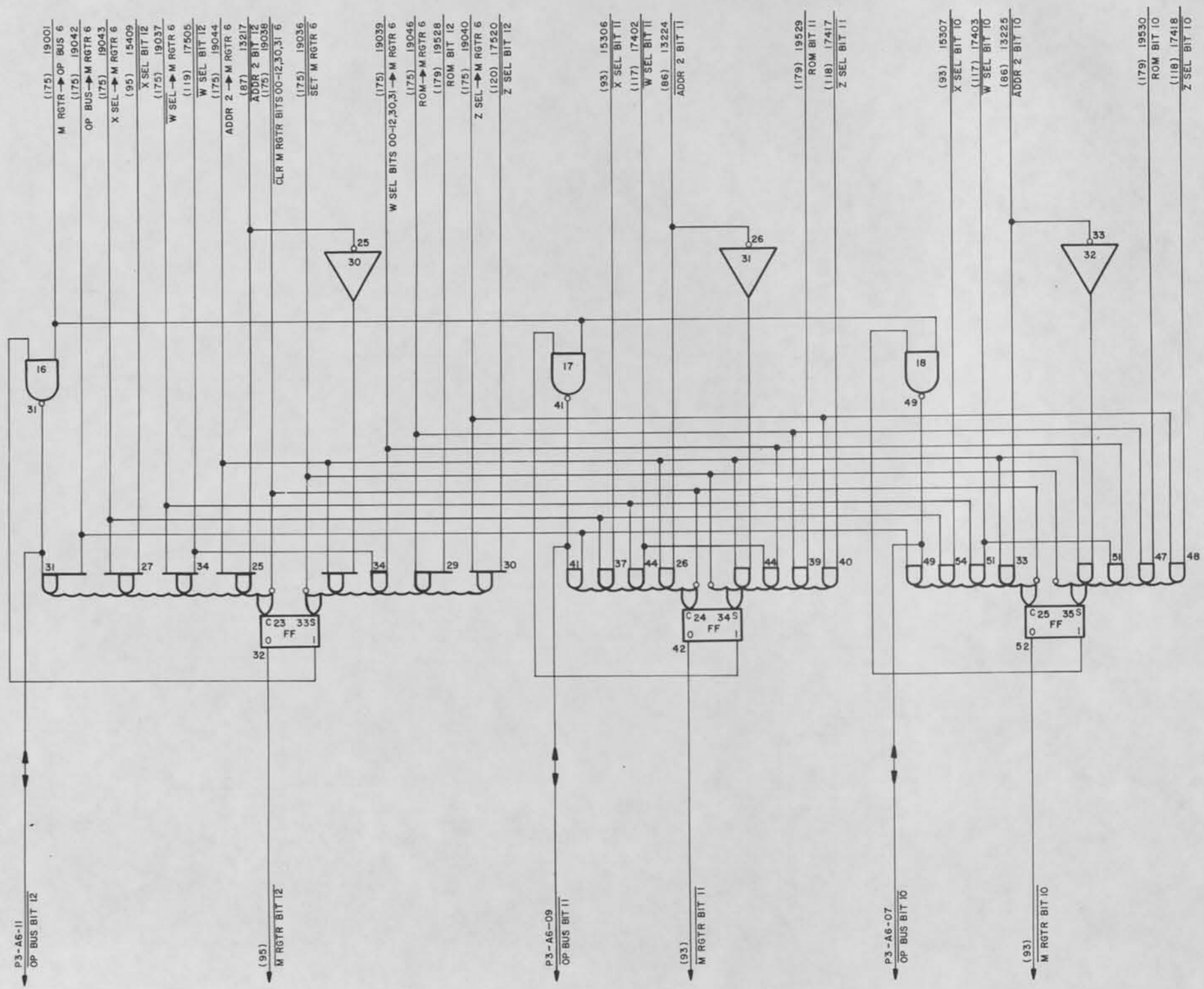

NOTES:
1. CARD TYPE-2920
2. CARD LOCATION-82C

M REGISTER & OP BUS, BITS 10-12 | 190

SIZE	CODE IDENT	DWG NO.
D	90536	7073539
SCALE	CLASS A	SHEET 168

DWG. NO. 7073539

UD 1-2534C

REVISIONS						
ZONE	LTR	EIR	DESCRIPTION	CHK	DATE	APPROVED

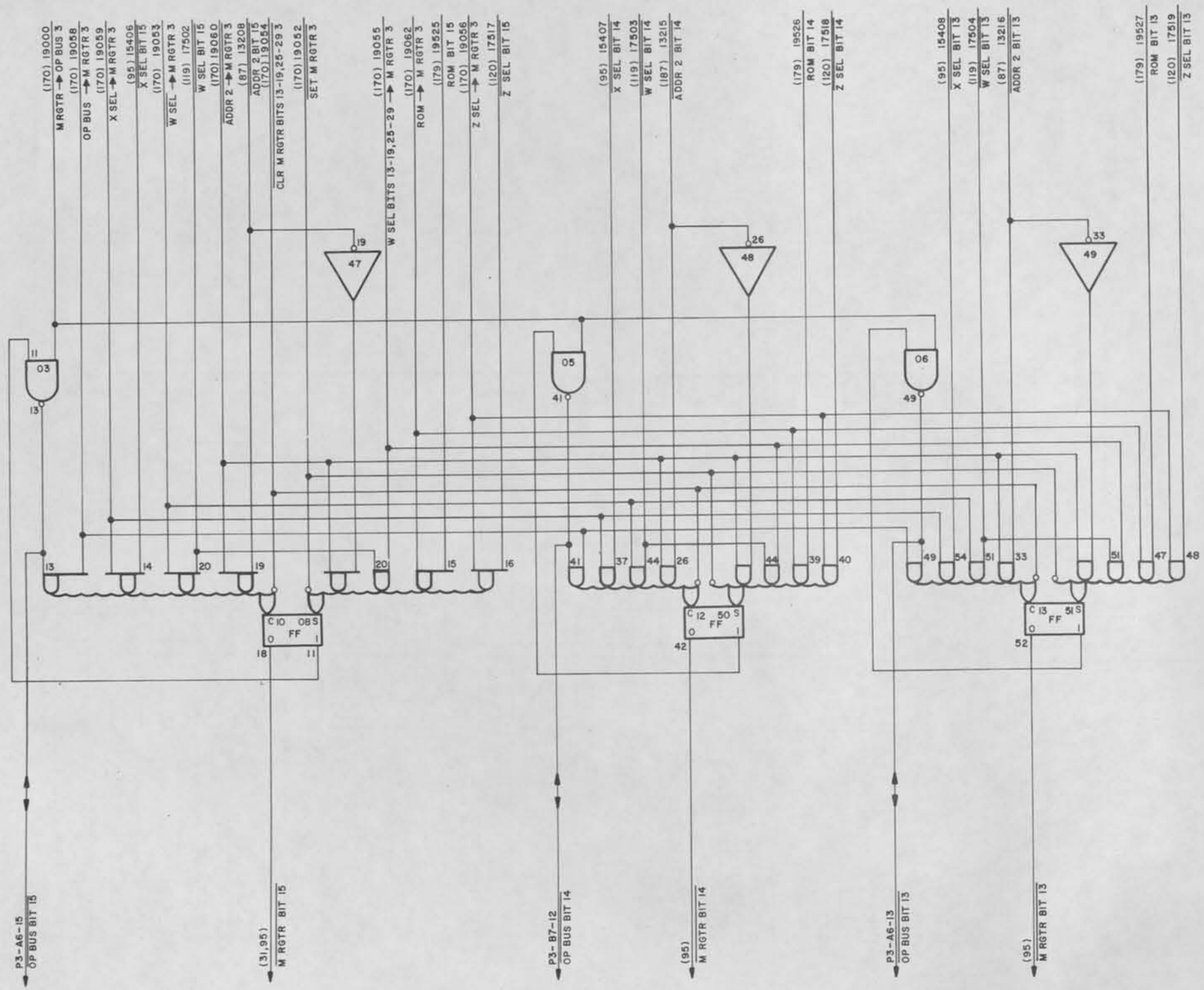

NOTES:
1. CARD TYPE-2920.
2. CARD LOCATION-81C.

M REGISTER & OP BUS, BITS 13-15 | 190

SIZE	CODE IDENT	DWG NO.
D	90536	7073539
SCALE	CLASS A	SHEET 69

DWG. NO. 7073539

UD 1-8534C

REVISIONS						
ZONE	LTR	EIR	DESCRIPTION	CHK	DATE	APPROVED

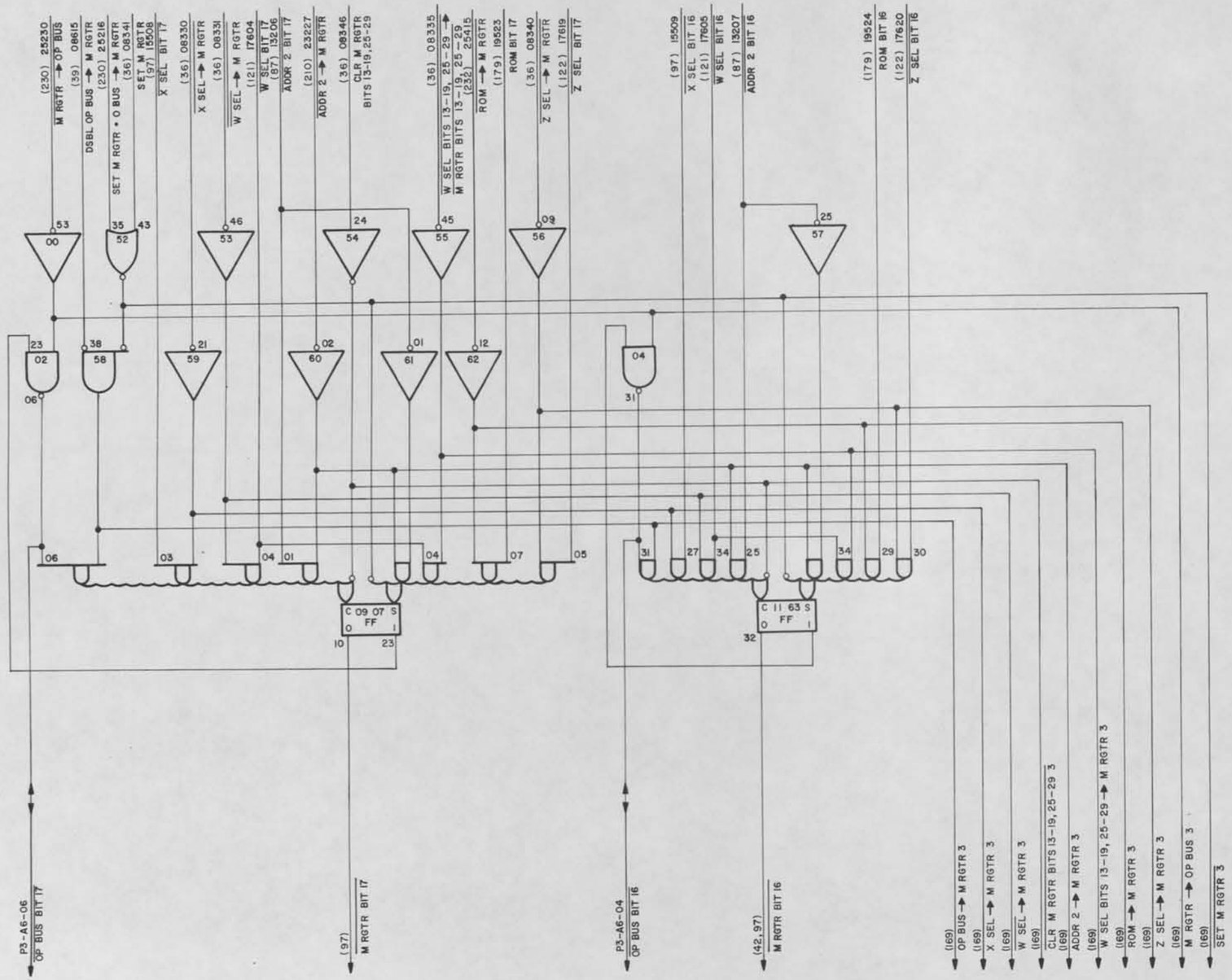

NOTES:

1. CARD TYPE-2920.
2. CARD LOCATION-8IC.

M REGISTER & OP BUS, BITS 16 – 17 | 190

SIZE	CODE IDENT	DWG NO.
D	90536	7073539
SCALE	CLASS A	SHEET 170

DWG. NO. 7073539

UD 1-2534C

REVISIONS						
ZONE	LTR	EIR	DESCRIPTION	CHK	DATE	APPROVED

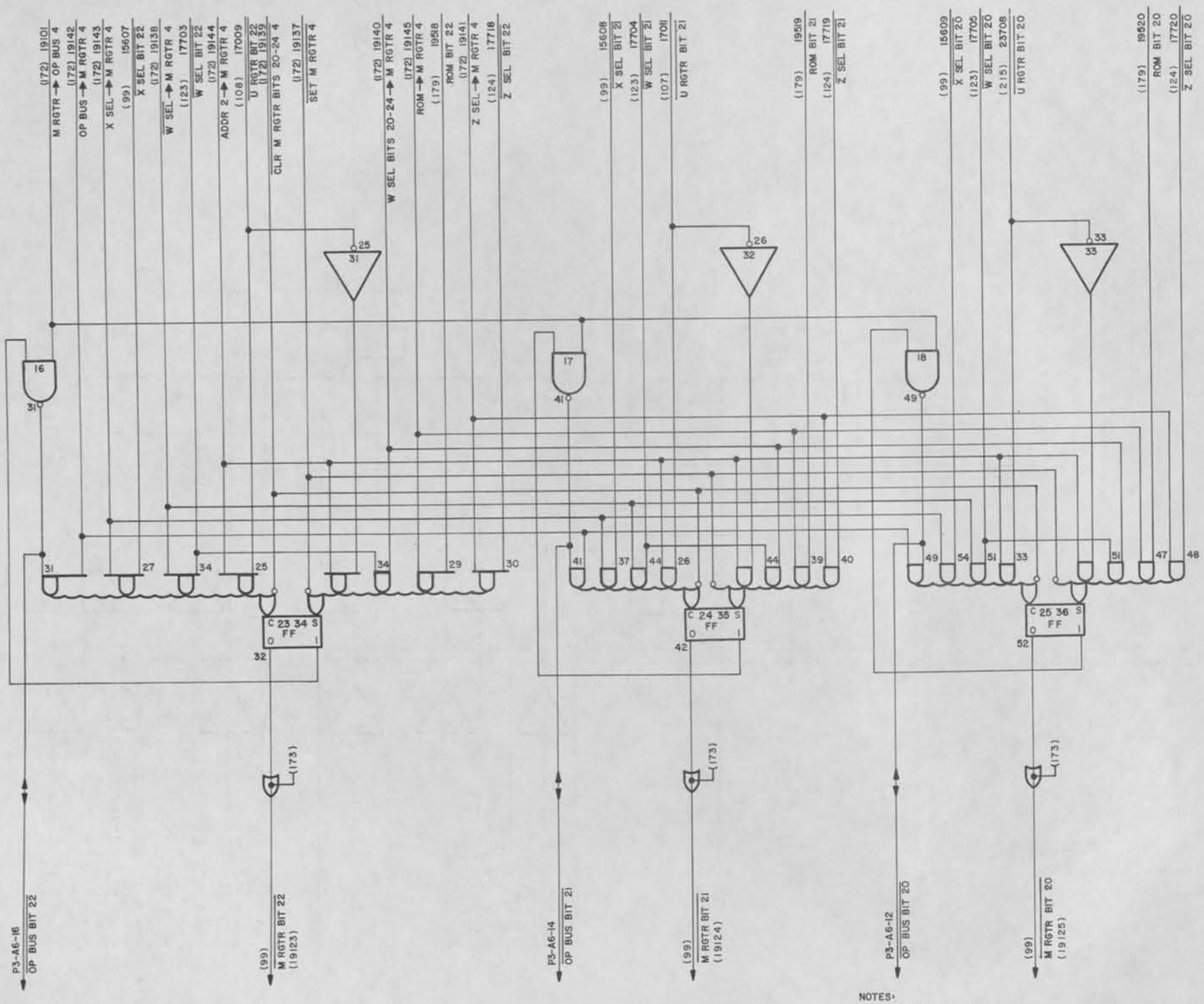

NOTES:
1. CARD TYPE-2920.
2. CARD LOCATION-80C.

M REGISTER & OP BUS, BITS 20-22

191

SIZE	CODE IDENT	DWG NO.
D	90536	7073539
SCALE	CLASS A	SHEET 71

DWG. NO. 7073539

UD 1-8534C

REVISIONS						
ZONE	LTR	EIR	DESCRIPTION	CHK	DATE	APPROVED
	CA	D06588	SEE EIR		12-18-73	

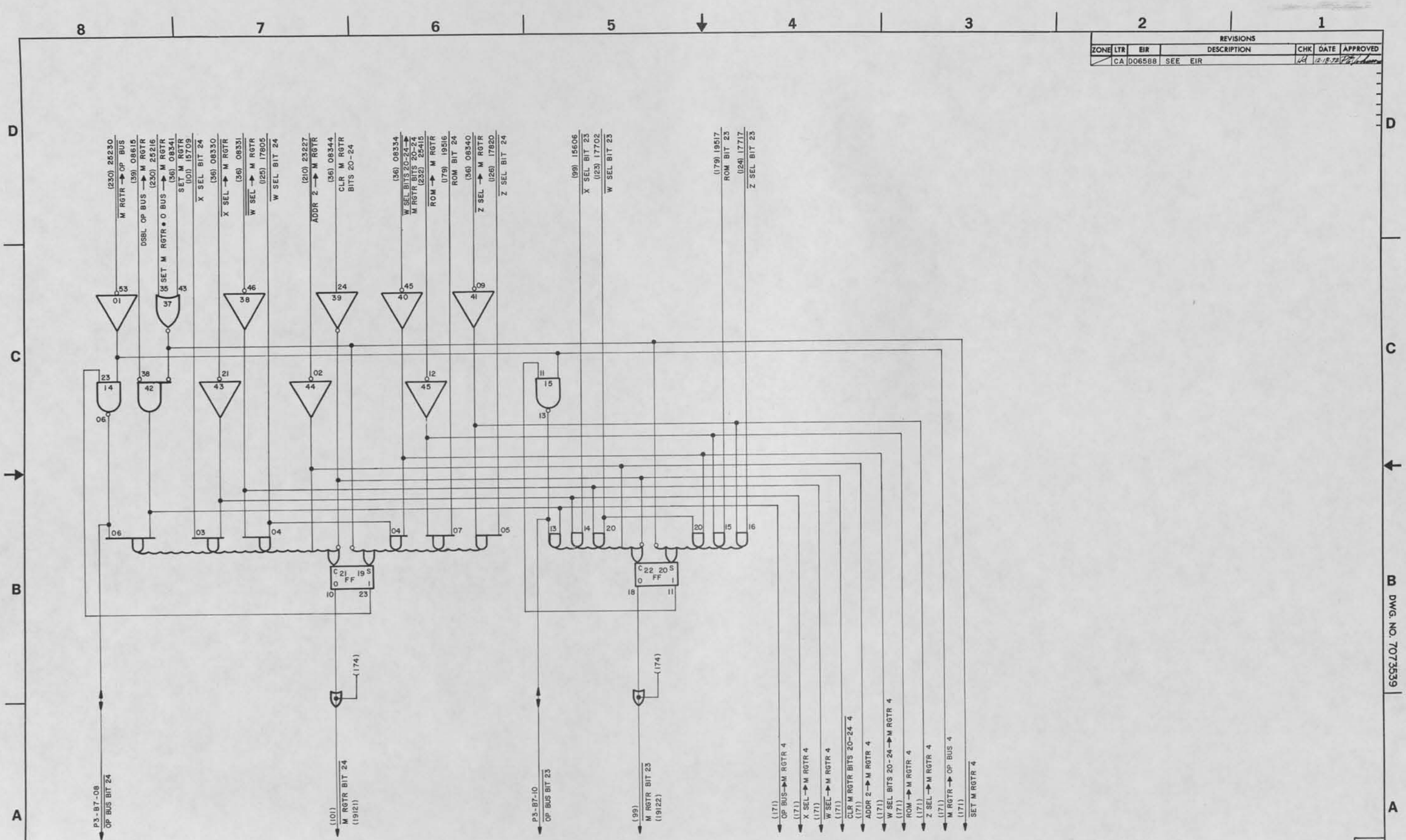

NOTES:
1. CARD TYPE - 2920
2. CARD LOCATION - 80C

CHANGE 2

M REGISTER & OP BUS, BITS 23 - 24 | 191

SIZE	CODE IDENT	DWG NO.
D	90536	7073539
SCALE	CLASS A	SHEET 72

DWG. NO. 7073539

UD 1-8534C

REVISIONS						
ZONE	LTR	EIR	DESCRIPTION	CHK	DATE	APPROVED
	CA	D06588	SEE EIR			

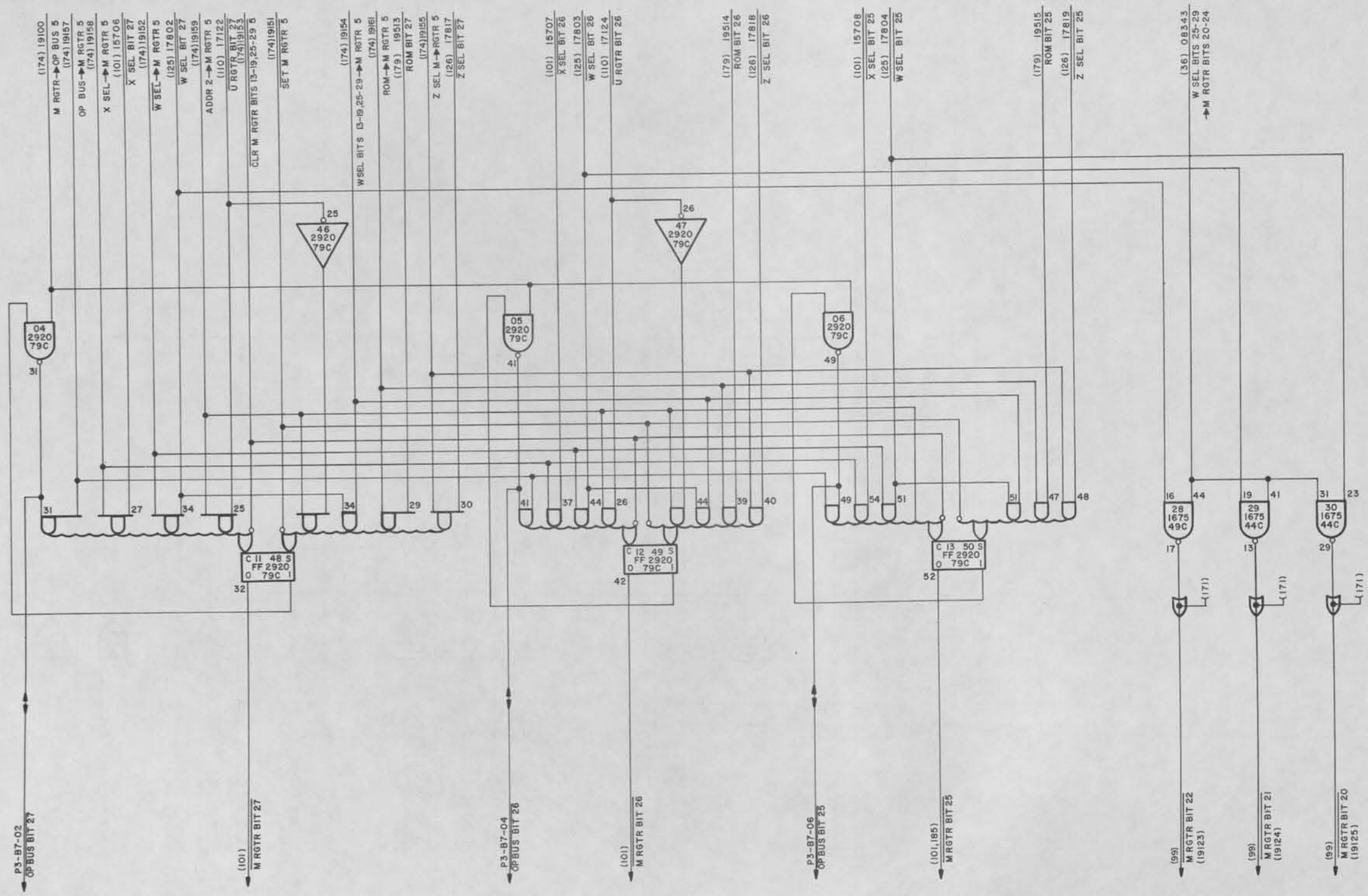

M REGISTER & OP BUS, BITS 25-27 | 191

CHANGE 2

SIZE	CODE IDENT	DWG NO.
D	90536	7073539
SCALE	CLASS A	SHEET 173

DWG. NO. 7073539

UD 1-8534C

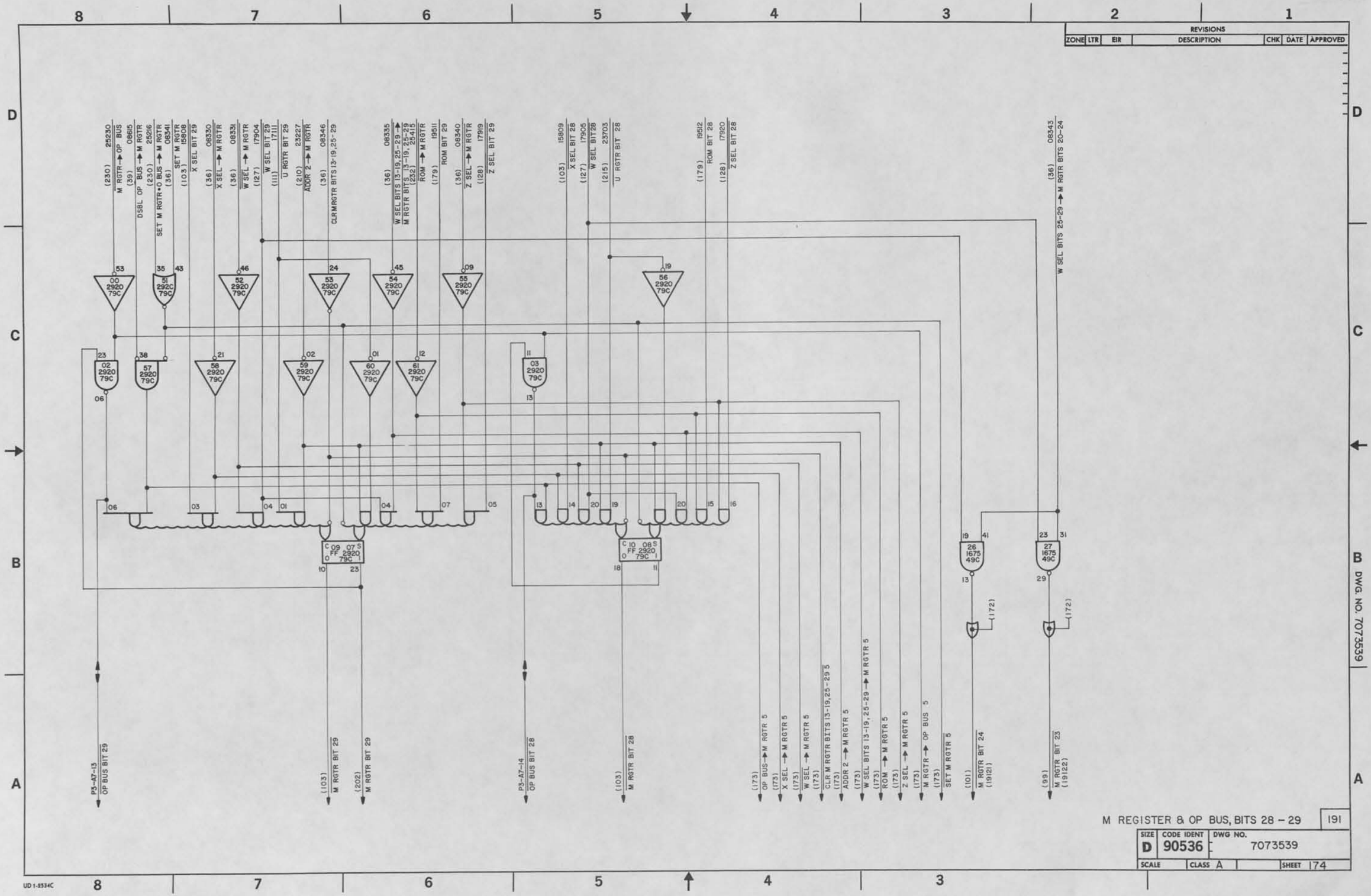
REVISIONS
ZONE LTR EIR DESCRIPTION CHK DATE APPROVED
M REGISTER & OP BUS, BITS 28 – 29
191
SIZE D
CODE IDENT 90536
DWG NO. 7073539
SCALE
CLASS A
SHEET 174
DWG. NO. 7073539
UD 1-2534C

REVISIONS						
ZONE	LTR	EIR	DESCRIPTION	CHK	DATE	APPROVED

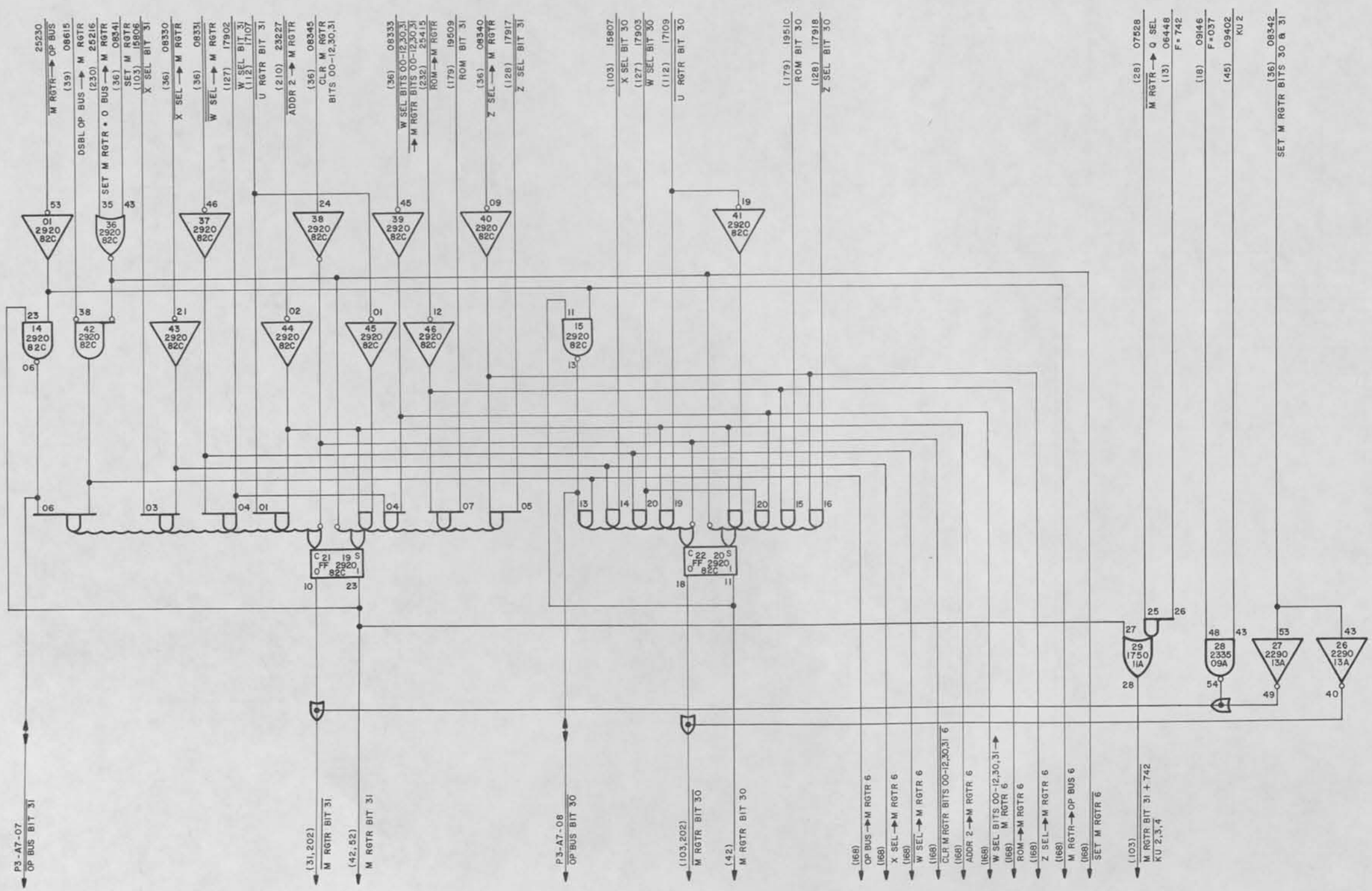

M REGISTER & OP BUS, BITS 30-31 | 190

SIZE	CODE IDENT	DWG NO.
D	90536	7073539
SCALE	CLASS A	SHEET 175

DWG. NO. 7073539

UD 1-2534C

REVISIONS						
ZONE	LTR	EIR	DESCRIPTION	CHK	DATE	APPROVED
	CA	D06588	SEE EIR		12-1-72	

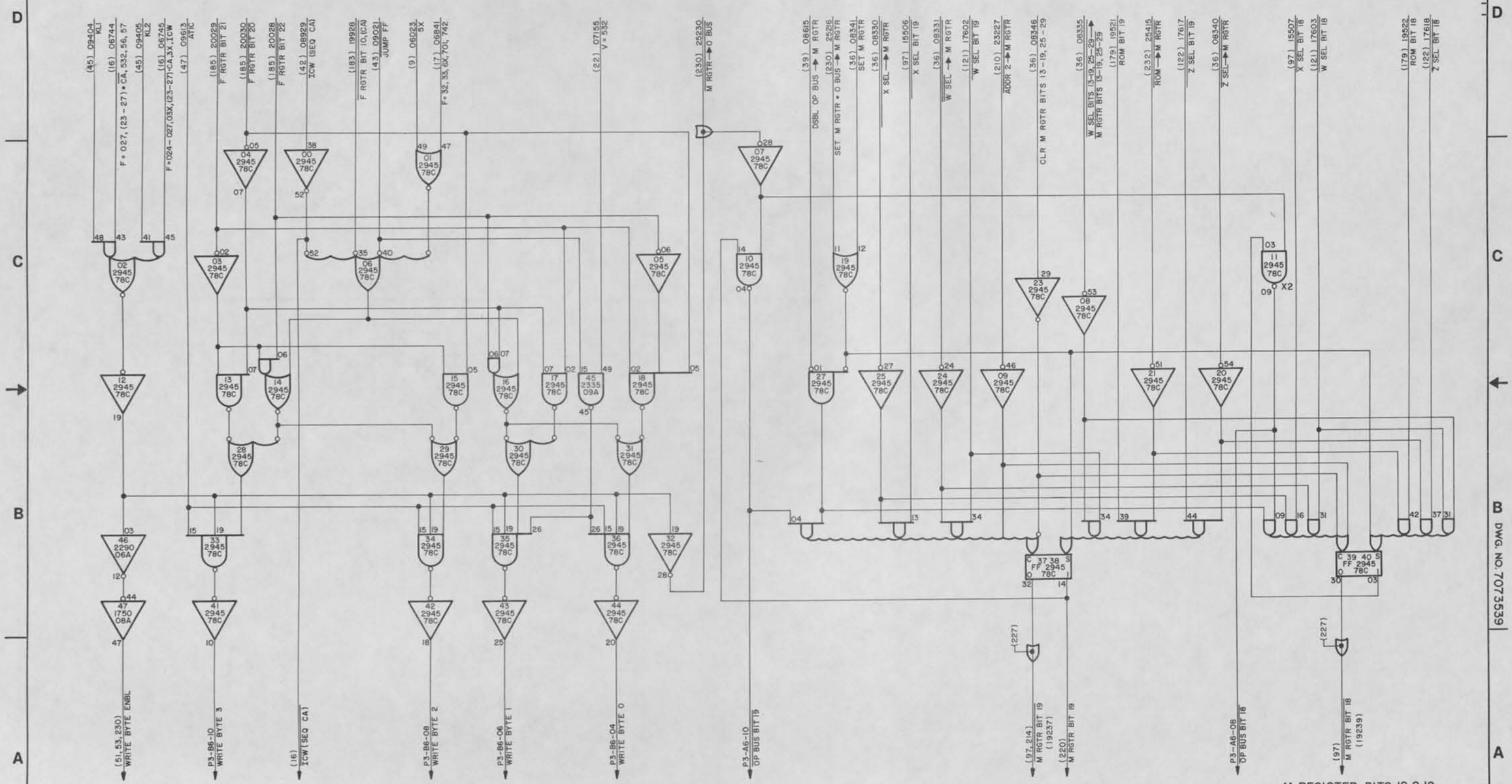

M REGISTER BITS 18 & 19
AND WRITE BYTE 2

192

SIZE	CODE IDENT	DWG NO.
D	90536	7073539
SCALE	CLASS A	SHEET 176

CHANGE 2

UD 1-8534C

REVISIONS						
ZONE	LTR	EIR	DESCRIPTION	CHK	DATE	APPROVED

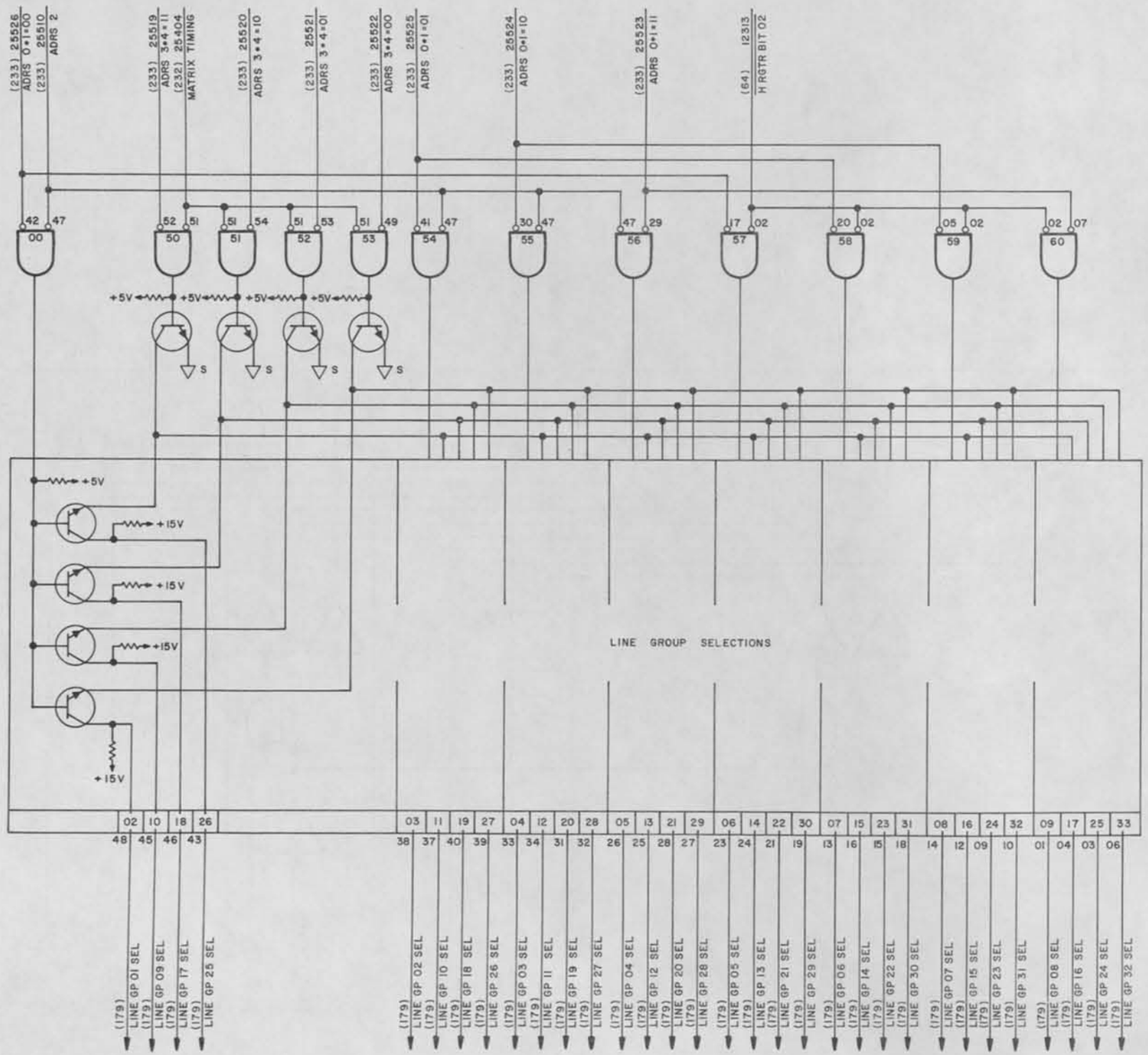

NOTES:
1. CARD TYPE – 2370
2. CARD LOCATION – 78B

ROM LINE SELECTIONS 194

SIZE	CODE IDENT	DWG NO.
D	90536	7073539
SCALE	CLASS A	SHEET 77

DWG. NO. 7073539

UD 1-8534C

REVISIONS						
ZONE	LTR	EIR	DESCRIPTION	CHK	DATE	APPROVED
	CK	D09611	SEE EIR		12-22-75	

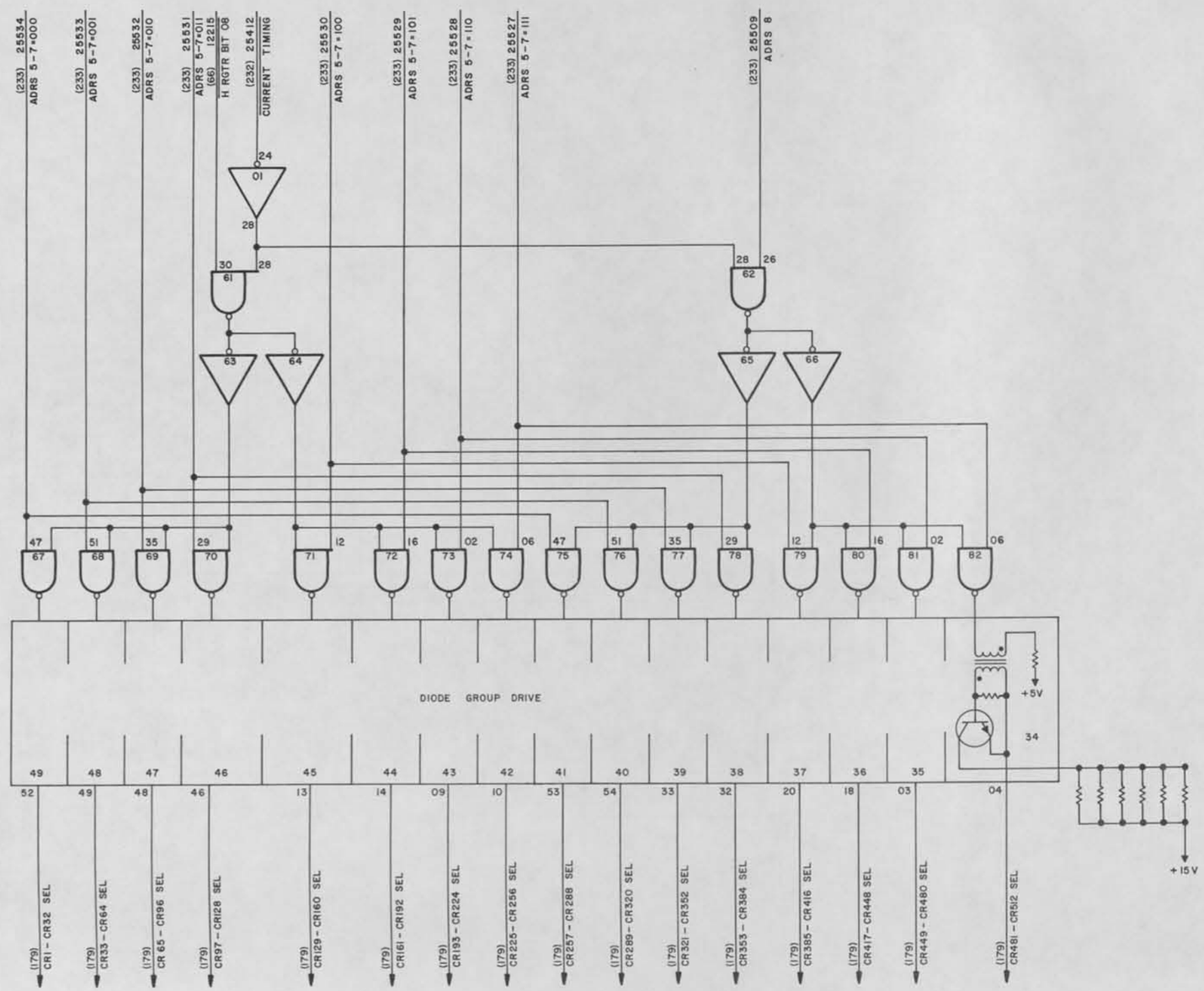

NOTES:
1. CARD TYPE — 2365
2. CARD LOCATION — 778

CHANGE 2

CURRENT SWITCH 194

SIZE	CODE IDENT	DWG NO.
D	90536	7073539
SCALE	CLASS A	SHEET 178

DWG. NO. 7073539

UD 1-8534C

REVISIONS						
ZONE	LTR	EIR	DESCRIPTION	CHK	DATE	APPROVED

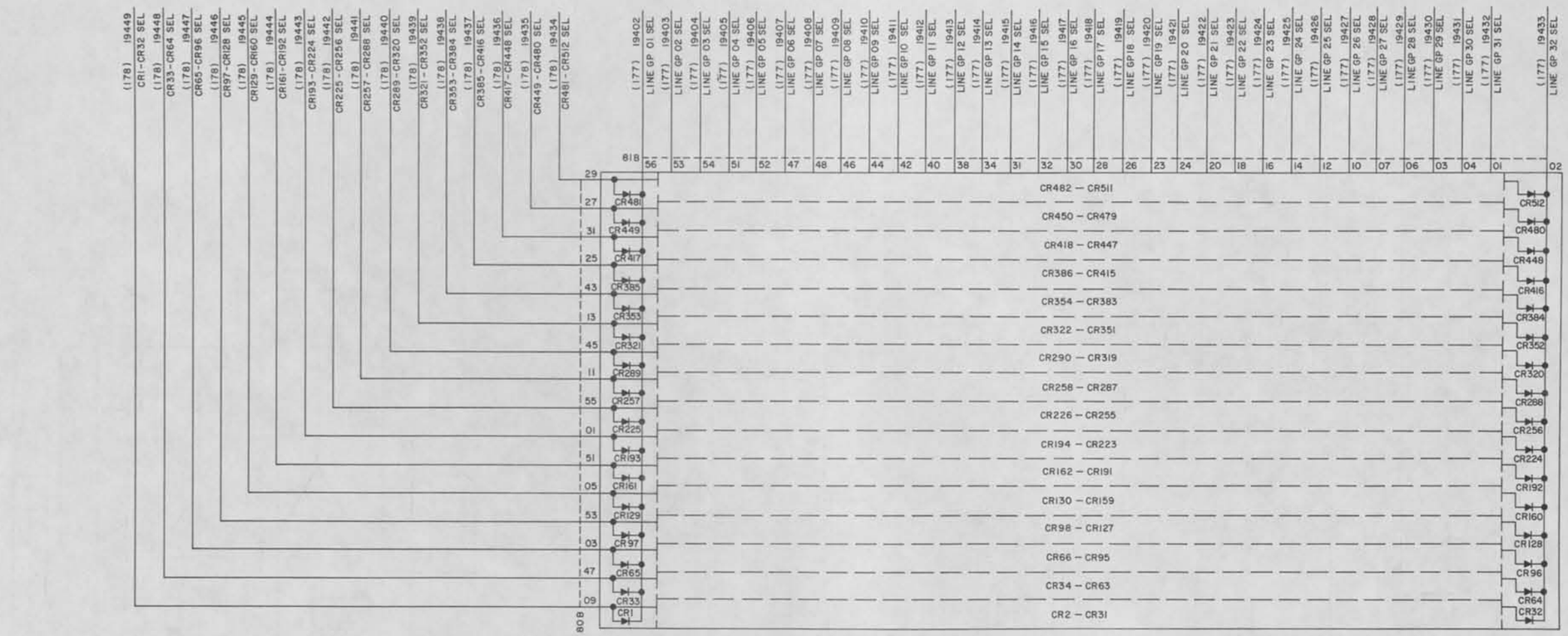

NOTE:
MODULE TYPE-7074003
CARD LOCATIONS-79-83B

ROPE MEMORY STACK 195

SIZE	CODE IDENT	DWG NO.
D	90536	7073539
SCALE	CLASS A	SHEET 179

DWG. NO. 7073539

UD 1-3334C

REVISIONS						
ZONE	LTR	EIR	DESCRIPTION	CHK	DATE	APPROVED
	BT	D06552	SEE EIR		12-17-72	
	CA	D06588	SEE EIR		12-18-72	

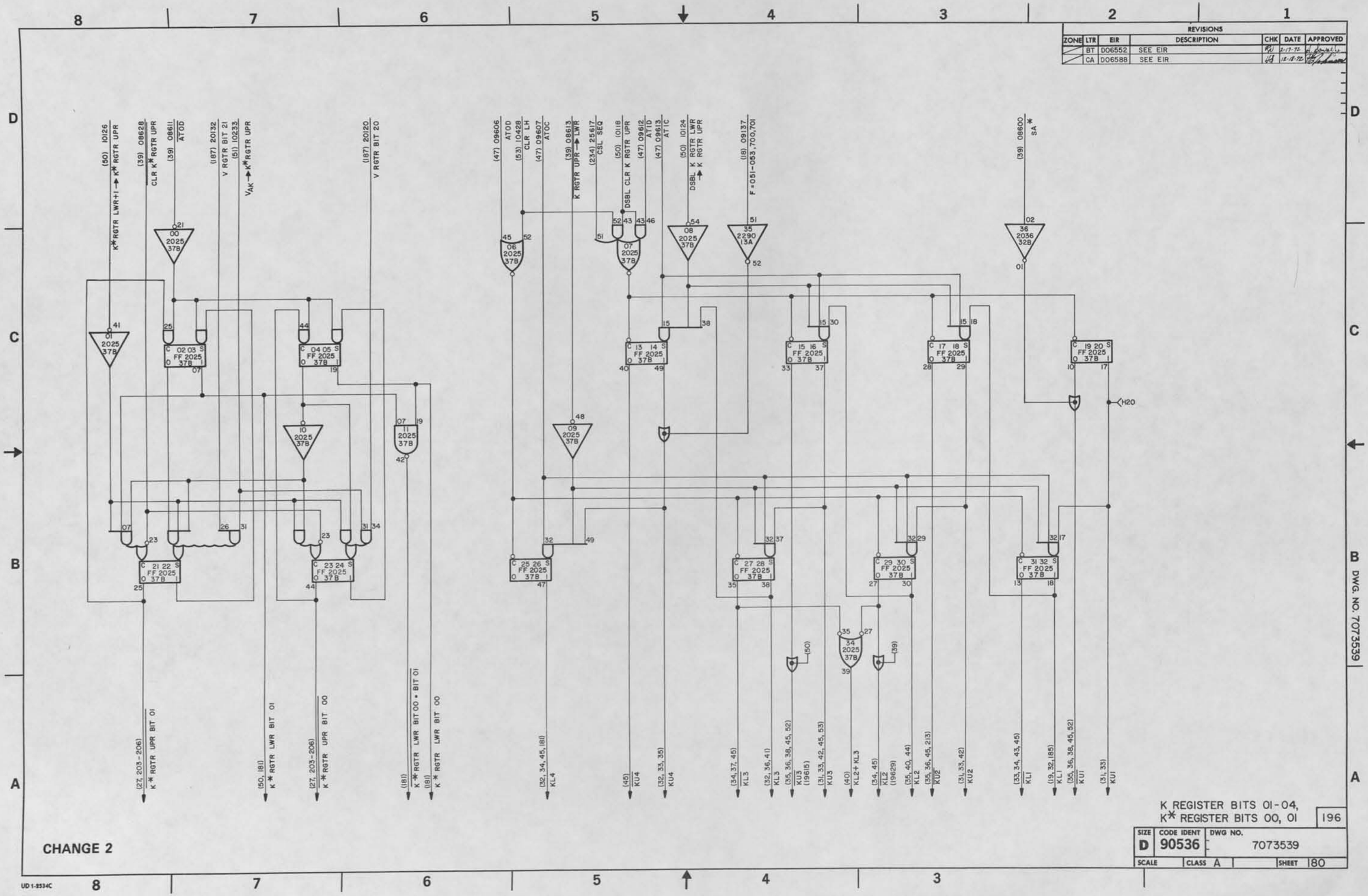

K REGISTER BITS 01-04,
K* REGISTER BITS 00, 01 | 196

SIZE	CODE IDENT	DWG NO.
D	90536	7073539
SCALE	CLASS A	SHEET 80

CHANGE 2

UD 1-8534C

REVISIONS						
ZONE	LTR	EIR	DESCRIPTION	CHK	DATE	APPROVED
	CA	D06588	SEE EIR			

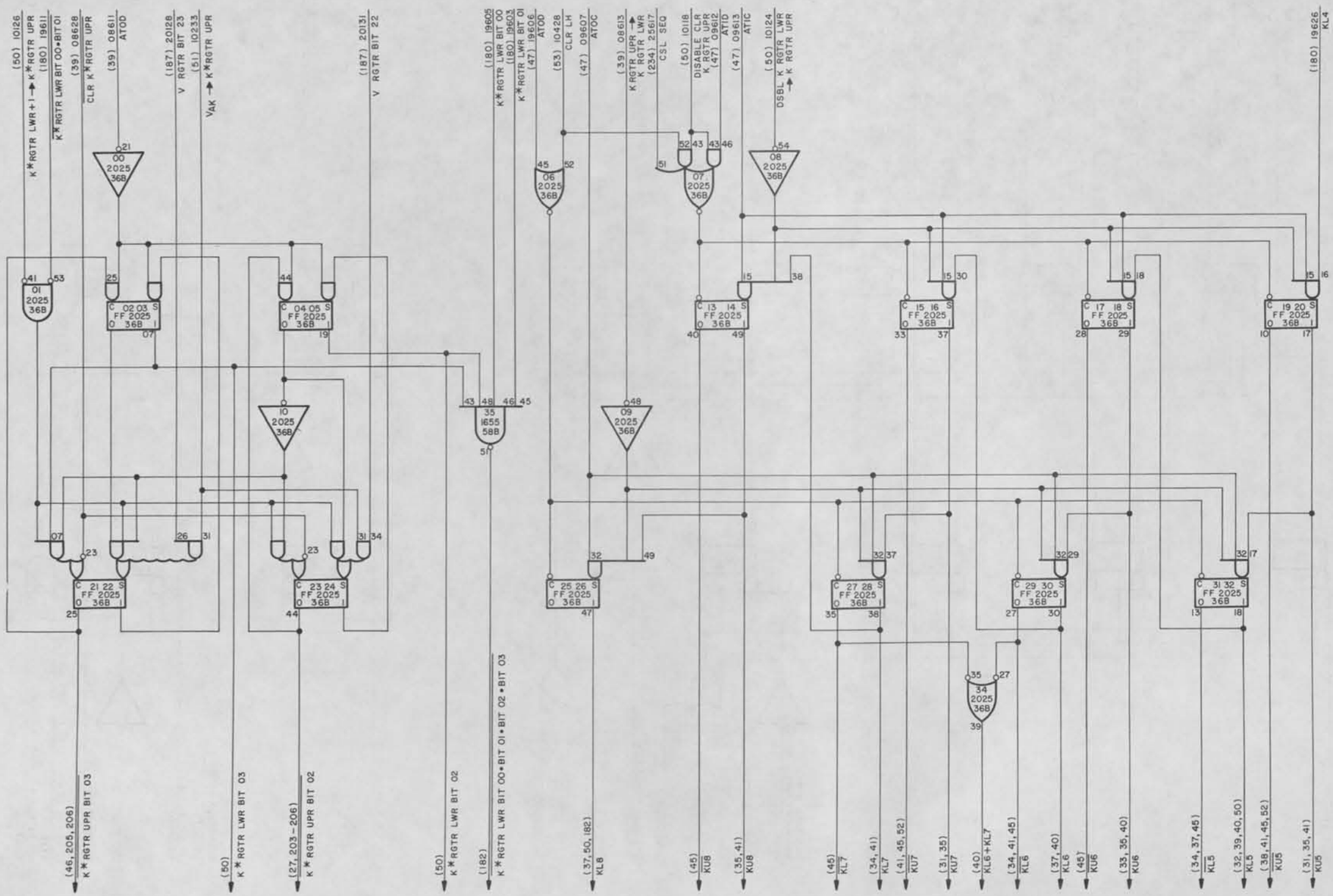

K* REGISTER, BITS 02 & 03,
K REGISTER, BITS 05—08

197

CHANGE 2

SIZE	CODE IDENT	DWG NO.
D	90536	7073539
SCALE	CLASS A	SHEET 181

DWG. NO. 7073539

UD 1-8534C

REVISIONS						
ZONE	LTR	EIR	DESCRIPTION	CHK	DATE	APPROVED

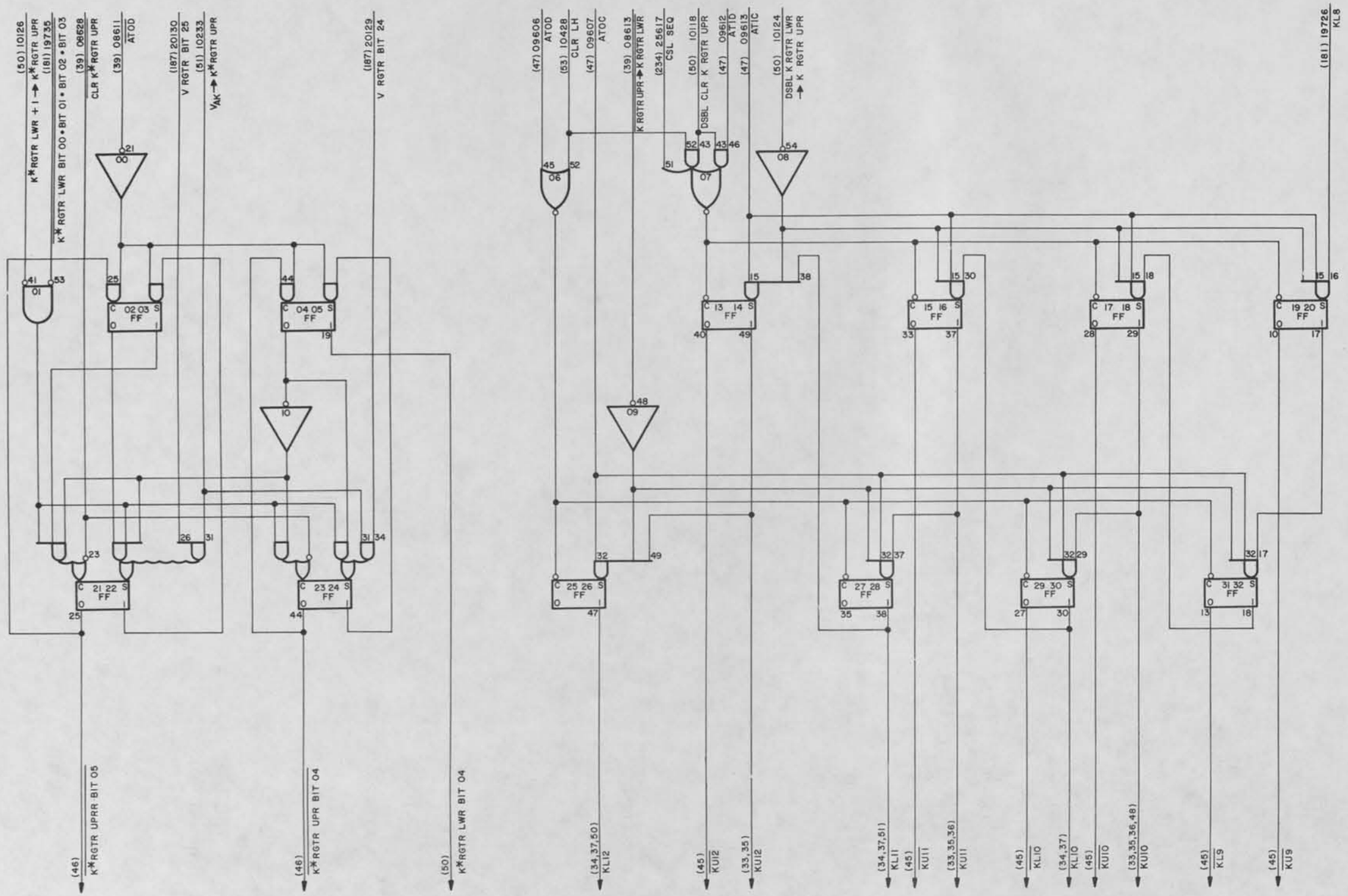

NOTES:
1. CARD TYPE – 2025
2. CARD LOCATION – 35B

K REGISTER BITS 09 – 12,
K* REGISTER BITS 04 – 05

198

SIZE	CODE IDENT	DWG NO.
D	90536	7073539
SCALE	CLASS A	SHEET 182

DWG. NO. 7073539

UD 1-8534C

REVISIONS						
ZONE	LTR	EIR	DESCRIPTION	CHK	DATE	APPROVED
	Y	D03399	SEE EIR		6-30-71	
	AS	D05195	SEE EIR		2-3-72	
	BT	D06552	SEE EIR		2-17-72	
	CA	D06588	SEE EIR		12-8-72	
	CE	D07197	SEE EIR		7-19-73	

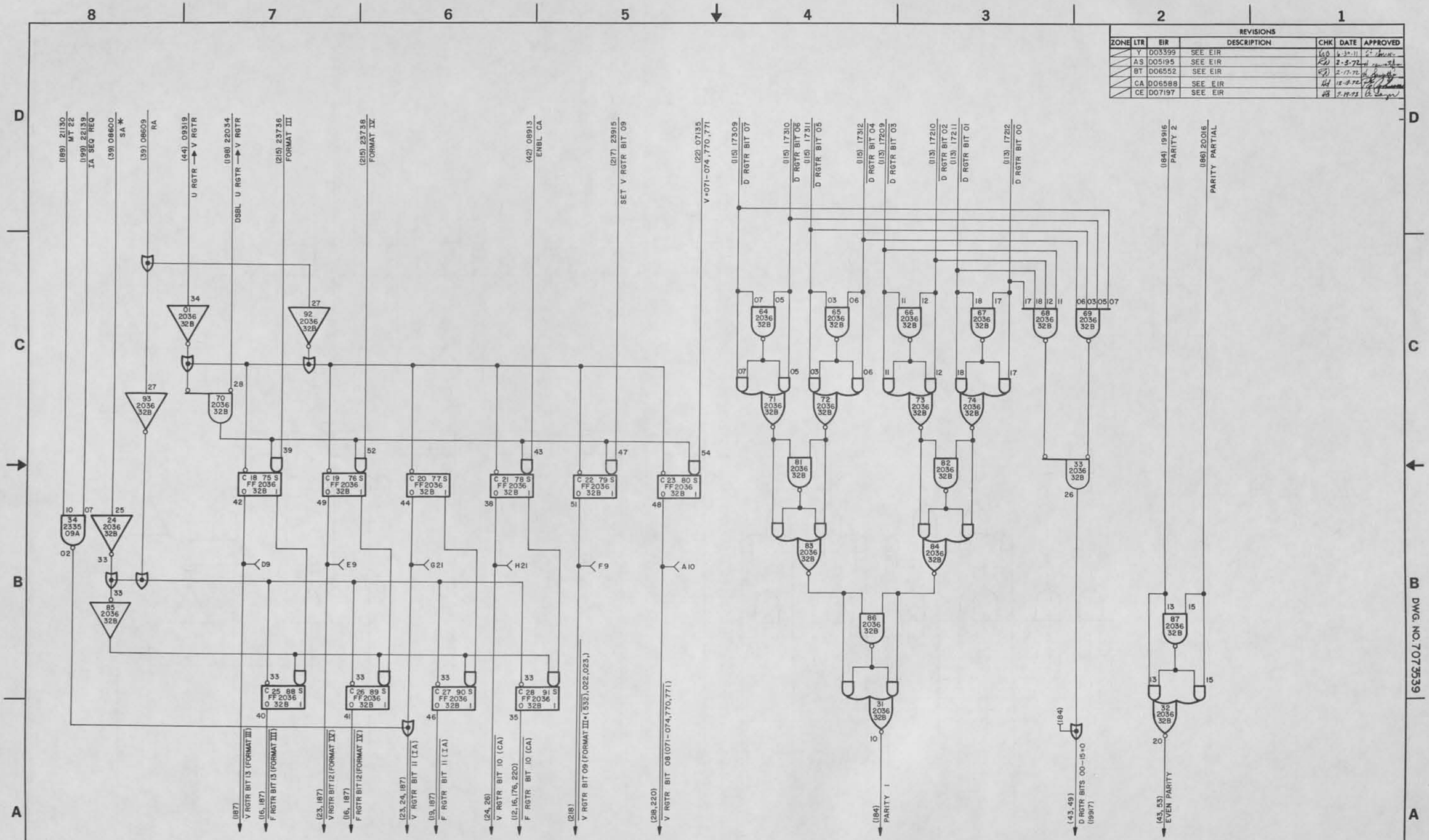

V & F REGISTERS, PARITY, (PART I) 199

CHANGE 2

SIZE	CODE IDENT	DWG NO.
D	90536	7073539
SCALE	CLASS A	SHEET 183

DWG. NO. 7073539

UD 1-8534C

REVISIONS						
ZONE	LTR	EIR	DESCRIPTION	CHK	DATE	APPROVED
	BB	D05858	SEE EIR			
	BT	D06552	SEE EIR			
	CA	D06588	SEE EIR			

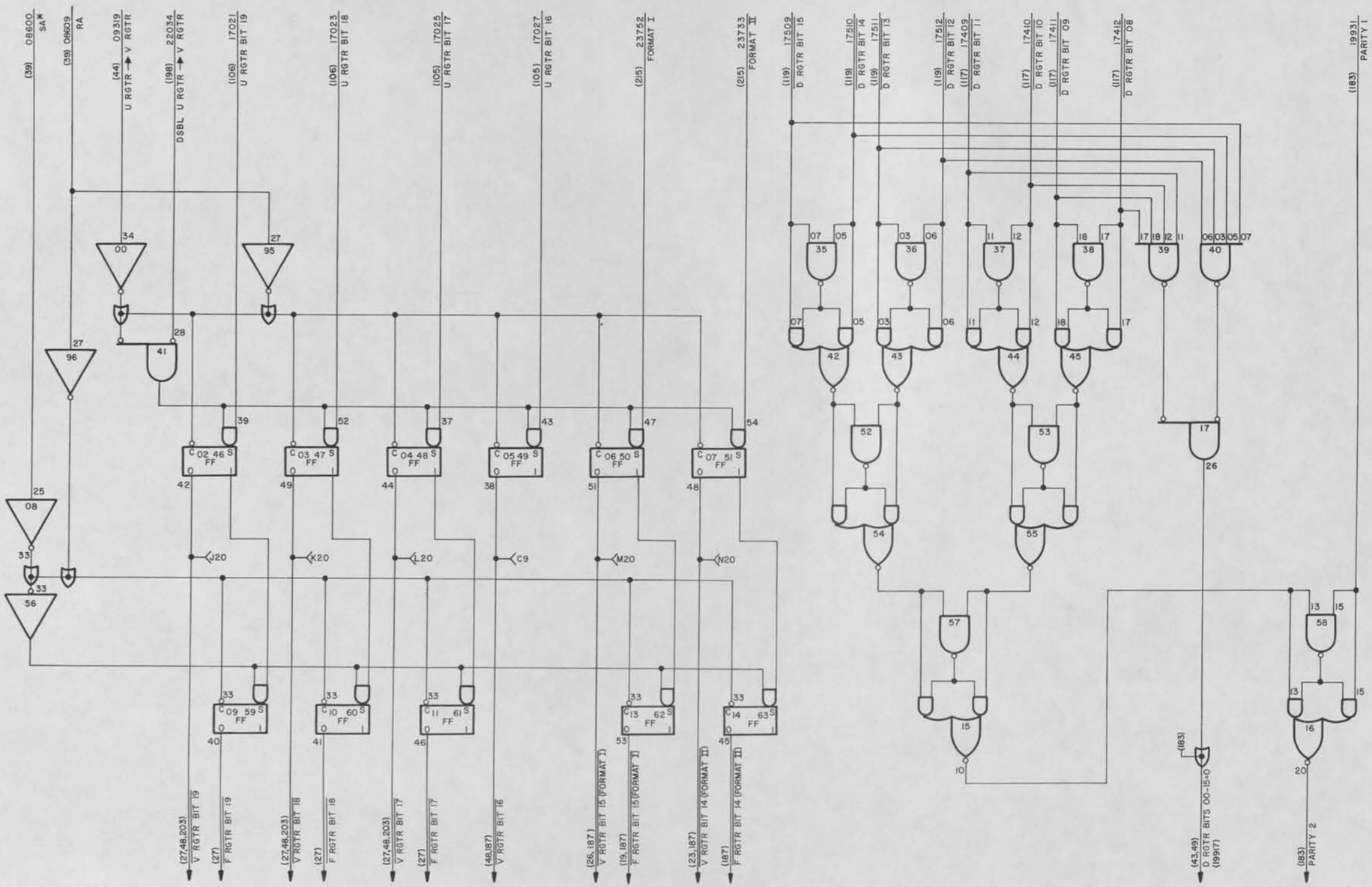

NOTES:
1. CARD TYPE — 2036
2. CARD LOCATION — 318

CHANGE 2

V & F REGISTER, PARITY (PART 2) | 199

SIZE	CODE IDENT	DWG NO.
D	90536	7073539
SCALE	CLASS A	SHEET 184

DWG. NO. 7073539

UD 1-2534C

REVISIONS						
ZONE	LTR	EIR	DESCRIPTION	CHK	DATE	APPROVED
	BT	D06552	SEE EIR		2-17-72	
	BV	D06076	SEE EIR		2-18-72	
	CA	D06588	SEE EIR		12-18-72	

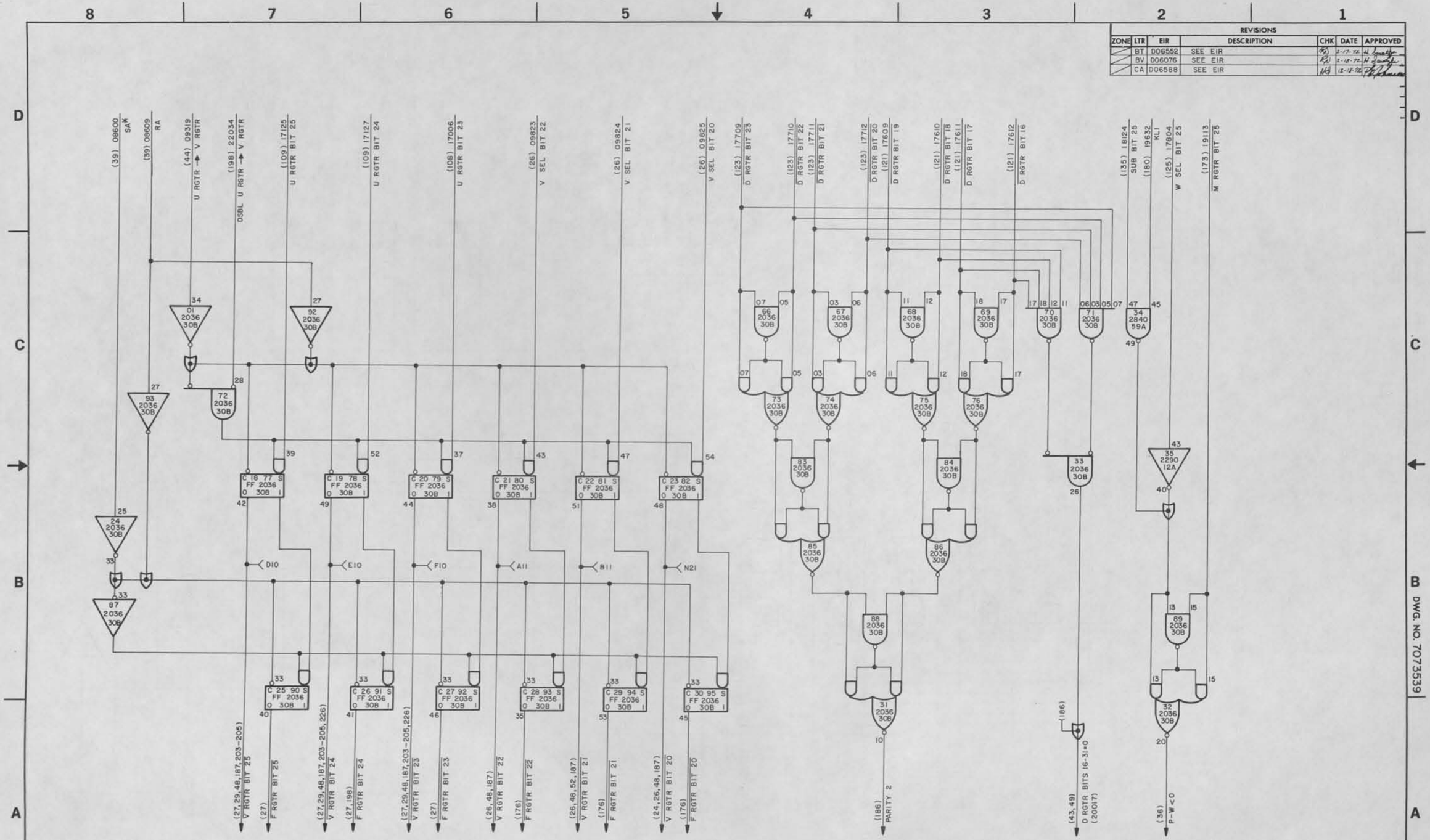

V & F REGISTERS, PARITY (PART 3) 200

CHANGE 2

SIZE	CODE IDENT	DWG NO.
D	90536	7073539
SCALE	CLASS A	SHEET 185

DWG. NO. 7073539

UD 1-8534C

REVISIONS						
ZONE	LTR	EIR	DESCRIPTION	CHK	DATE	APPROVED
	AH	D04915	SEE EIR		1-31-72	
	BT	D06552	SEE EIR		2-16-72	
	CA	D06588	SEE EIR		12-18-72	

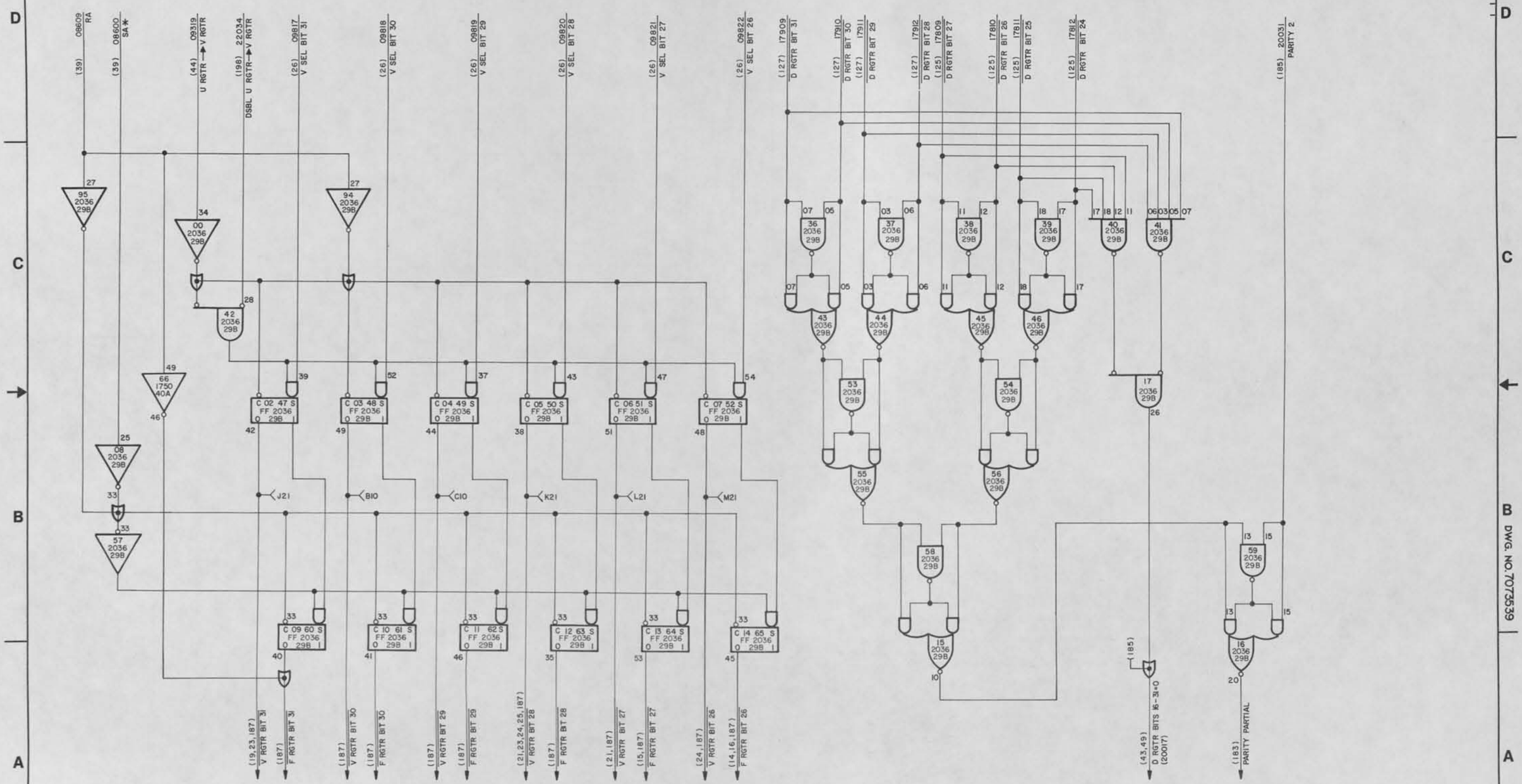

DWG. NO. 7073539

V&F REGISTERS, PARITY (PART 4) 200

SIZE	CODE IDENT	DWG NO.
D	90536	7073539
SCALE	CLASS A	SHEET 186

CHANGE 2

UD 1-8534C

REVISIONS						
ZONE	LTR	EIR	DESCRIPTION	CHK	DATE	APPROVED
	AK	D05145	SEE EIR		2-1-72	
	AM	D05722	SEE EIR		2-2-72	
	AN	D05753	SEE EIR		2-2-72	
	BB	D05858	SEE EIR		2-11-72	
	BC	D05859	SEE EIR		2-18-72	

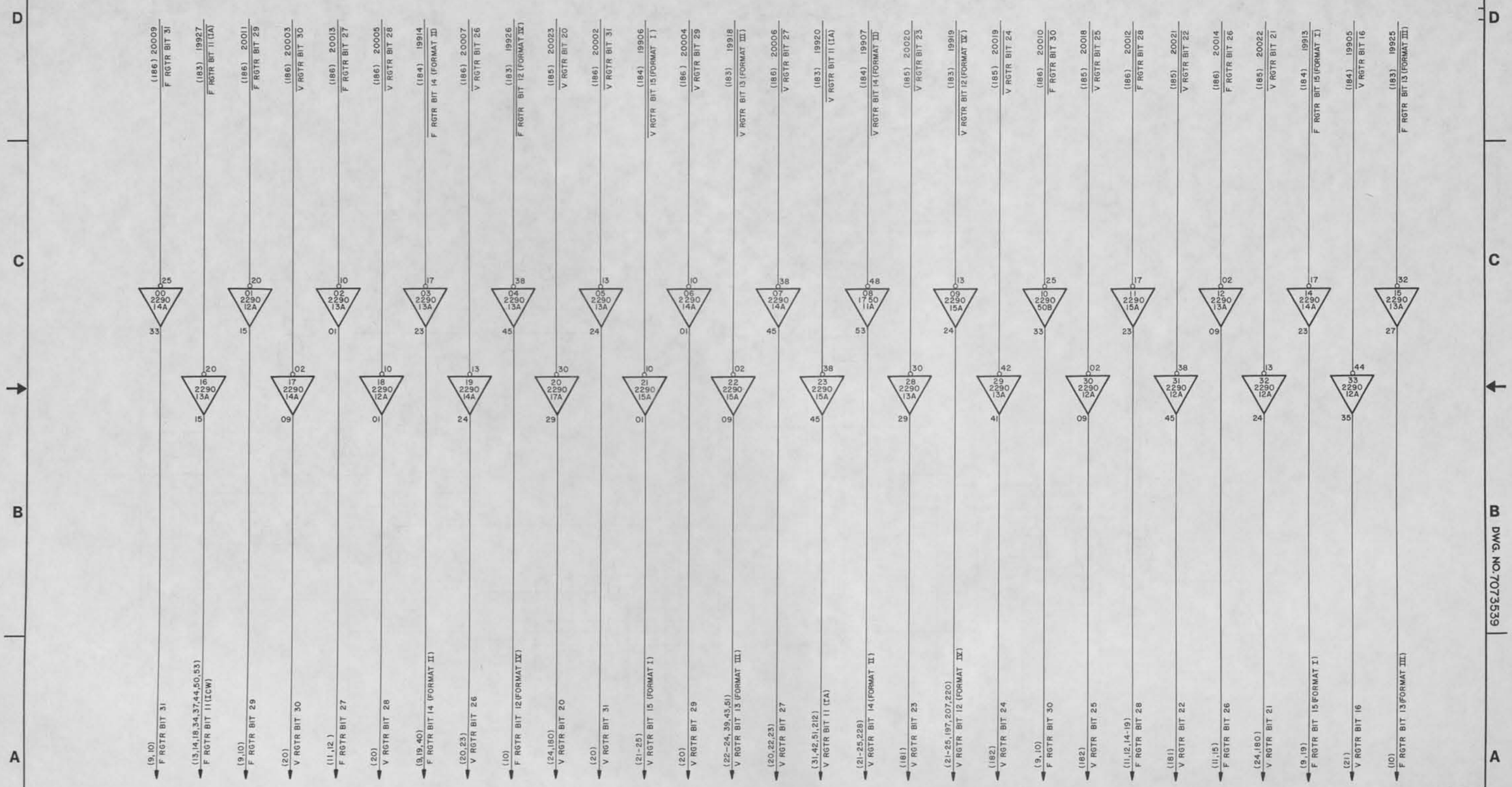

V & F REGISTER DRIVE 201

SIZE	CODE IDENT	DWG NO.
D	90536	7073539
SCALE	CLASS A	SHEET 87

DWG. NO. 7073539

UD 1-8534C

REVISIONS						
ZONE	LTR	EIR	DESCRIPTION	CHK	DATE	APPROVED
	BB	D05858	SEE EIR			
	BC	D05859	SEE EIR			
	BJ	D06509	SEE EIR			
	CA	D06588	SEE EIR			
	CG	D10463	SEE EIR			
	CJ	D10544	SEE EIR			
	CK	D09611	SEE EIR			

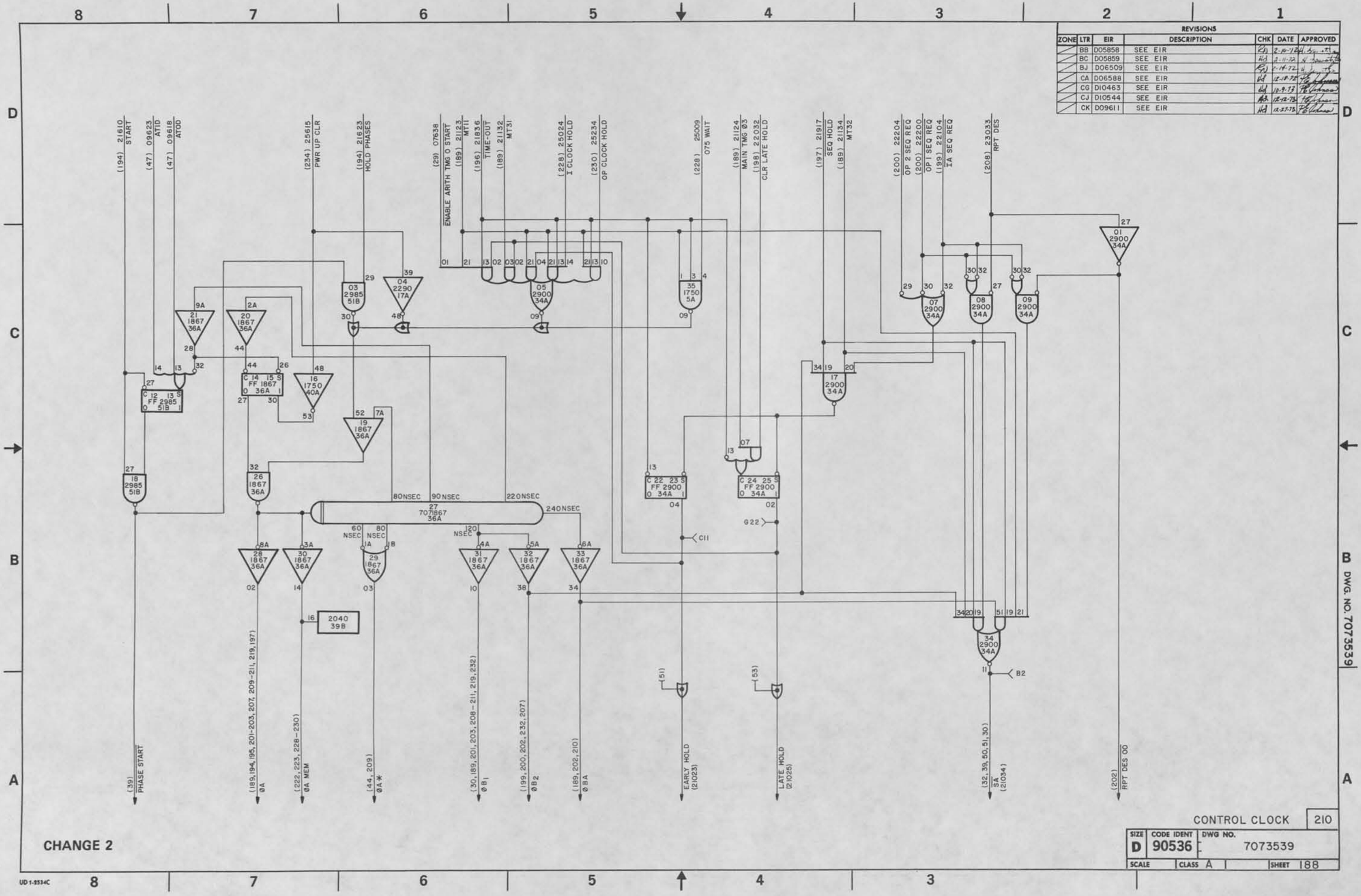

CHANGE 2

CONTROL CLOCK 210

SIZE	CODE IDENT	DWG NO.
D	90536	7073539
SCALE	CLASS A	SHEET 188

DWG. NO. 7073539

UD 1-2534C

REVISIONS						
ZONE	LTR	EIR	DESCRIPTION	CHK	DATE	APPROVED
	BS	D06550	SEE EIR	RBJ	2-16-72	H. Lunatta
	CA	D06588	SEE EIR	RB	12-18-72	Bulman

REVISIONS						
ZONE	LTR	EIR	DESCRIPTION	CHK	DATE	APPROVED
	V	D03370	SEE EIR	RAB	6-17-71	Bulman
	Y	D03399	SEE EIR	RAB	6-30-71	Bulman
	AH	D04915	SEE EIR	RJ	1-28-72	H. Lunatta
	AU	D05750	SEE EIR	RJ	2-4-72	H. Lunatta
	BC	D05859	SEE EIR	RB	2-11-72	H. Lunatta
	BJ	D06509	SEE EIR	RJ	2-14-72	H. Lunatta
	BL	D06511	SEE EIR	RJ	2-15-72	H. Lunatta

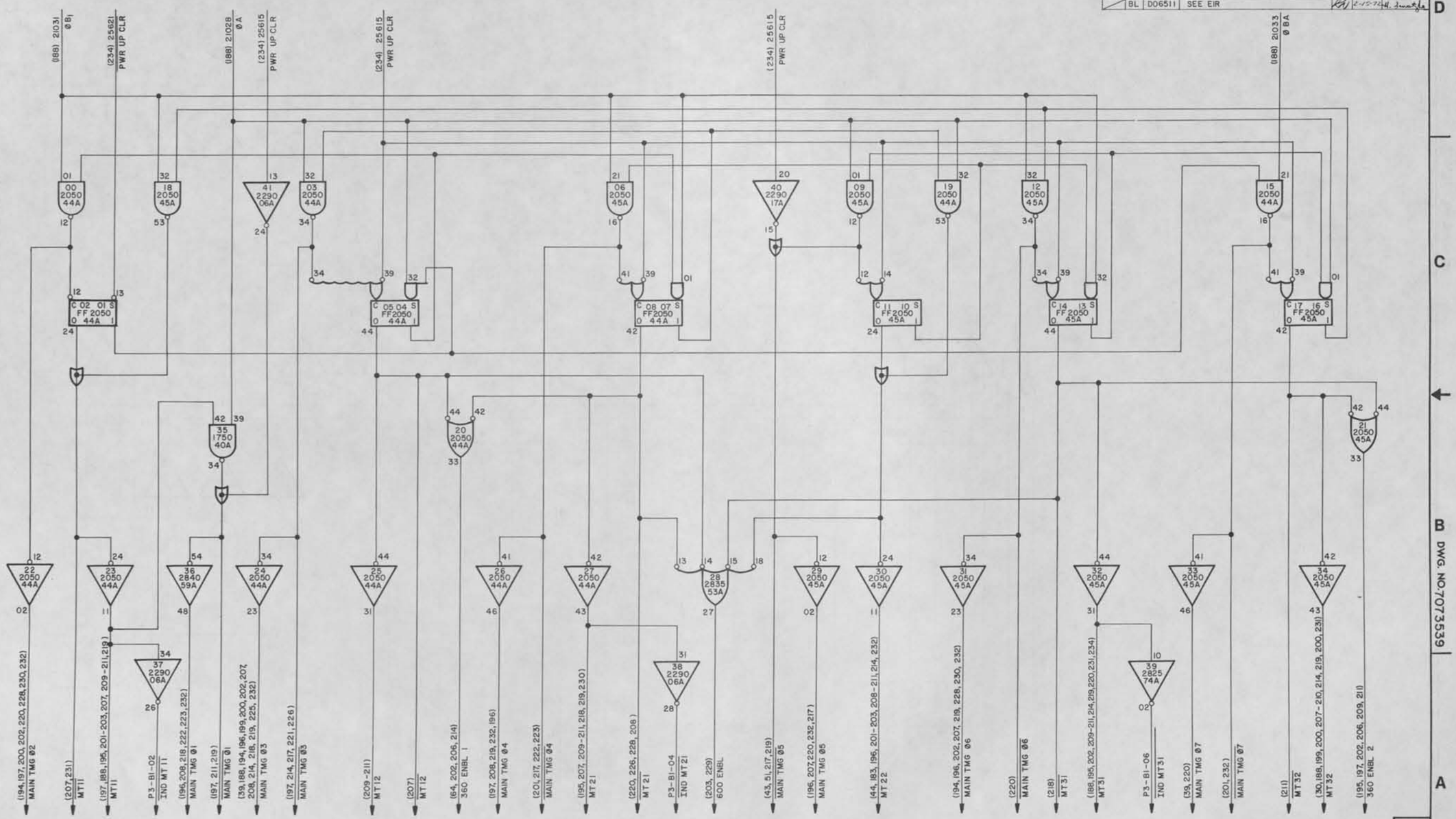

DWG. NO. 7073539

MAIN TIMING 211

CHANGE 2

SIZE	CODE IDENT	DWG NO.
D	90536	7073539
SCALE	CLASS A	SHEET 89

UD 1-8534C

REVISIONS						
ZONE	LTR	EIR	DESCRIPTION	CHK	DATE	APPROVED
	Y	D03399	SEE EIR	KAB	6-30-71	[illegible]
	AY	D05804	SEE EIR	KJ	2-8-72	[illegible]

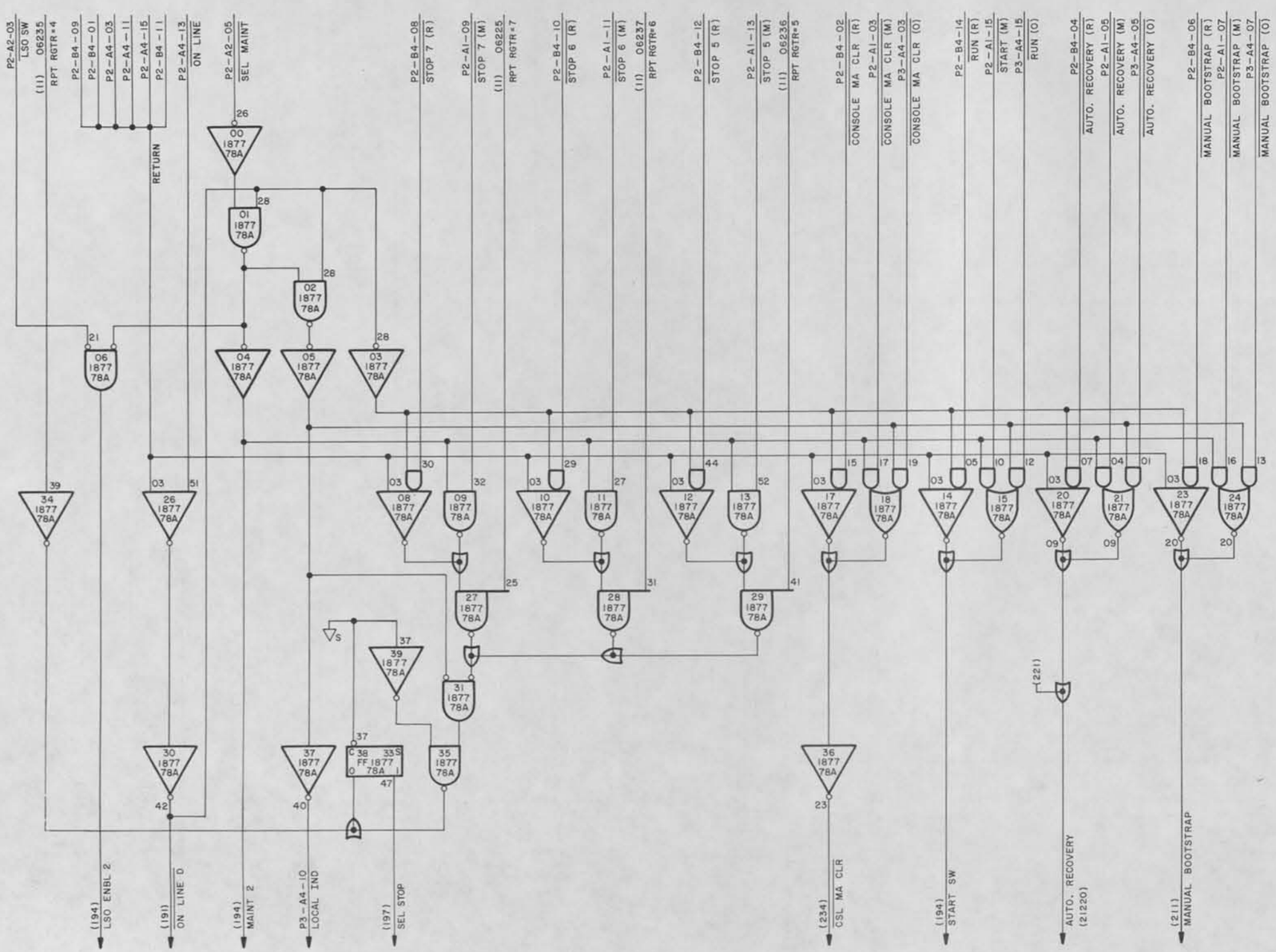

CONSOLE INPUT I 212

SIZE	CODE IDENT	DWG NO.
D	90536	7073539
SCALE	CLASS A	SHEET 190

DWG. NO. 7073539

UD 1-8534C

REVISIONS						
ZONE	LTR	EIR	DESCRIPTION	CHK	DATE	APPROVED
	Y	D03399	SEE EIR	[illegible]	6-30-71	[illegible]
	AY	D05804	SEE EIR	[illegible]	8-8-72	[illegible]

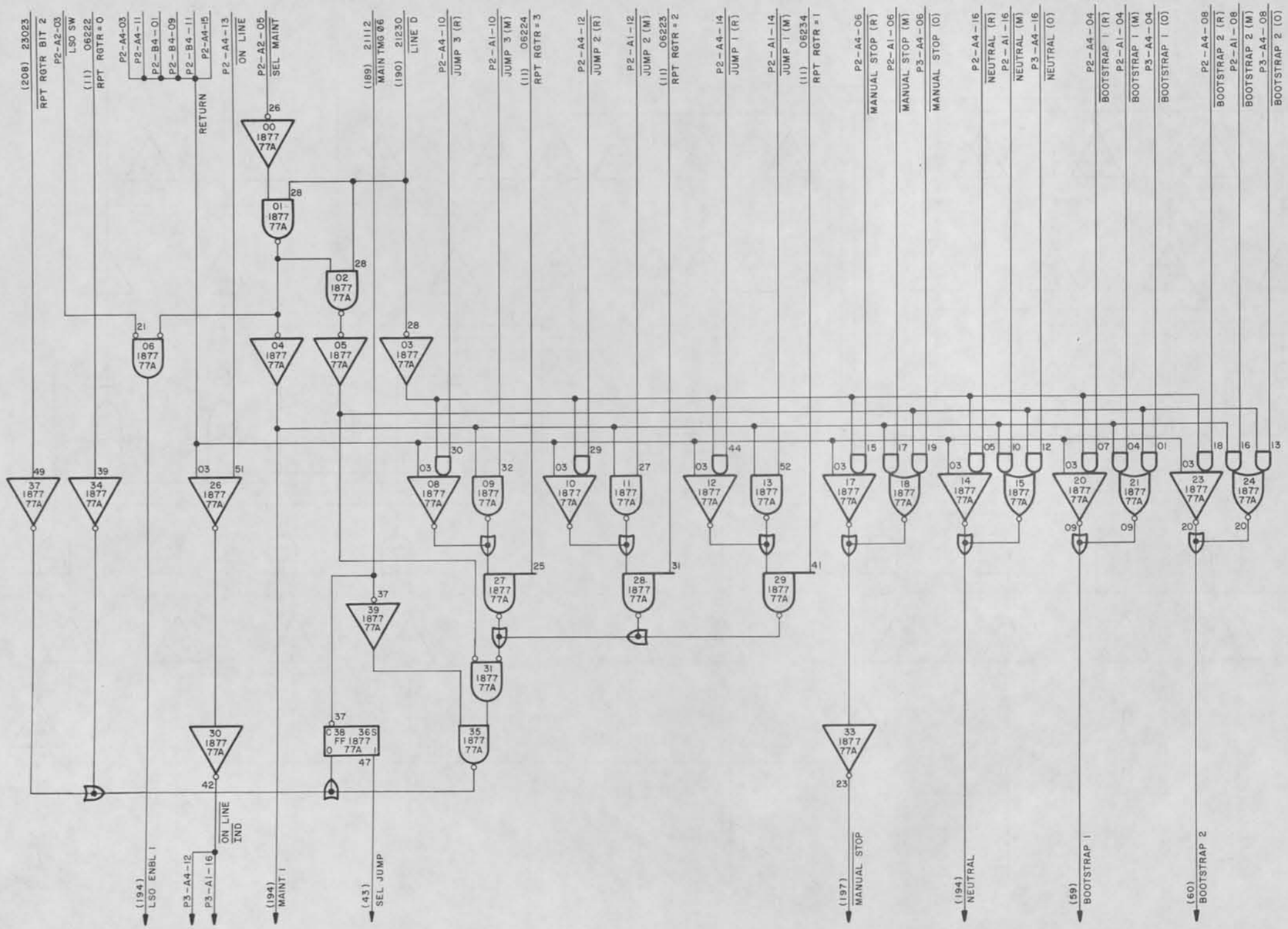

CONSOLE INPUT 2 | 213

SIZE	CODE IDENT	DWG NO.
D	90536	7073539
SCALE	CLASS A	SHEET 19

DWG. NO. 7073539

UD 1-8534C

REVISIONS						
ZONE	LTR	EIR	DESCRIPTION	CHK	DATE	APPROVED

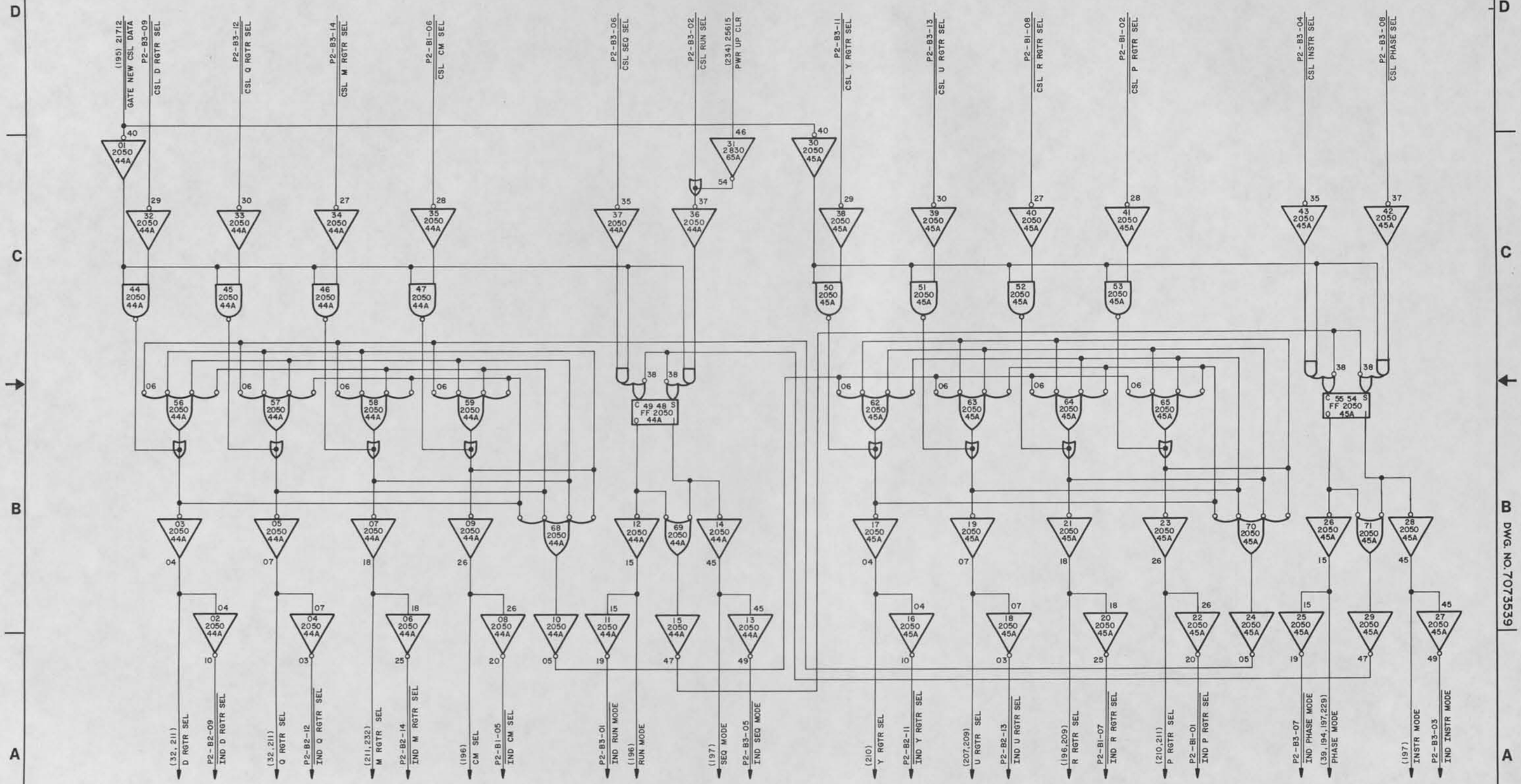

CONSOLE SELECTORS 214

SIZE	CODE IDENT	DWG NO.
D	90536	7073539
SCALE	CLASS A	SHEET 192

DWG. NO. 7073539

UD 1-8534C

REVISIONS						
ZONE	LTR	EIR	DESCRIPTION	CHK	DATE	APPROVED
	AT	005729	SEE EIR		2-8-72	

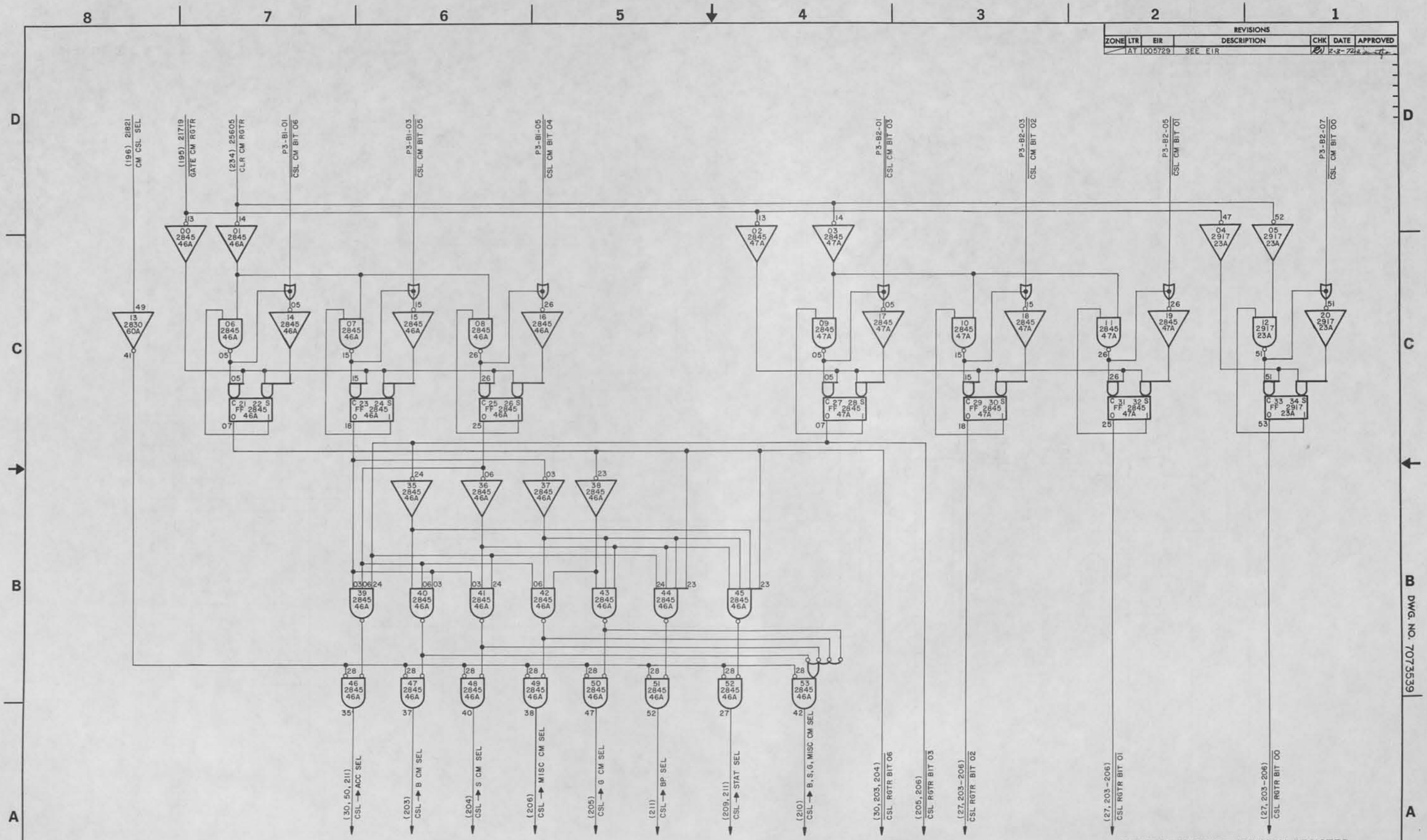

CONSOLE CONTROL MEMORY REGISTER
& CONTROL MEMORY SELECTOR

215

SIZE	CODE IDENT	DWG NO.
D	90536	7073539
SCALE	CLASS A	SHEET 193

DWG. NO. 7073539

UD 1-8534C

REVISIONS						
ZONE	LTR	EIR	DESCRIPTION	CHK	DATE	APPROVED
	Y	D03399	SEE EIR			
	AH	D04915	SEE EIR			
	AY	D05804	SEE EIR			
	BC	D05859	SEE EIR			
	CA	D06588	SEE EIR			

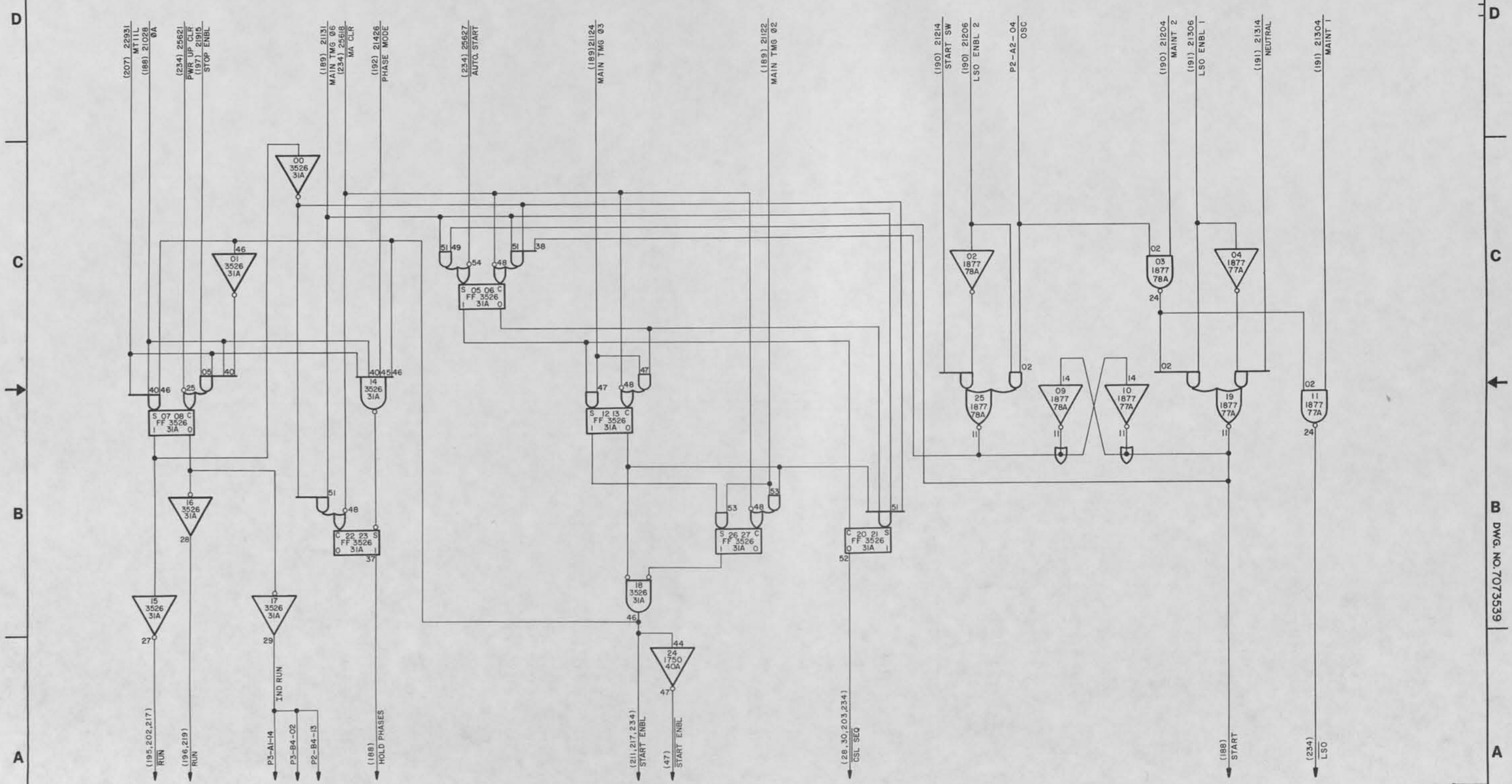

RUN, START, CONSOLE SEQUENCE 216

CHANGE 2

SIZE	CODE IDENT	DWG NO.
D	90536	7073539
SCALE	CLASS A	SHEET 194

DWG. NO. 7073539

UD 1-8534C

REVISIONS						
ZONE	LTR	EIR	DESCRIPTION	CHK	DATE	APPROVED
	U	D03206	SEE EIR		5-6-71	
	Y	D03399	SEE EIR		6-30-71	
	AG	D05091	SEE EIR		1-28-72	
	CA	D06588	SEE EIR		12-15-72	

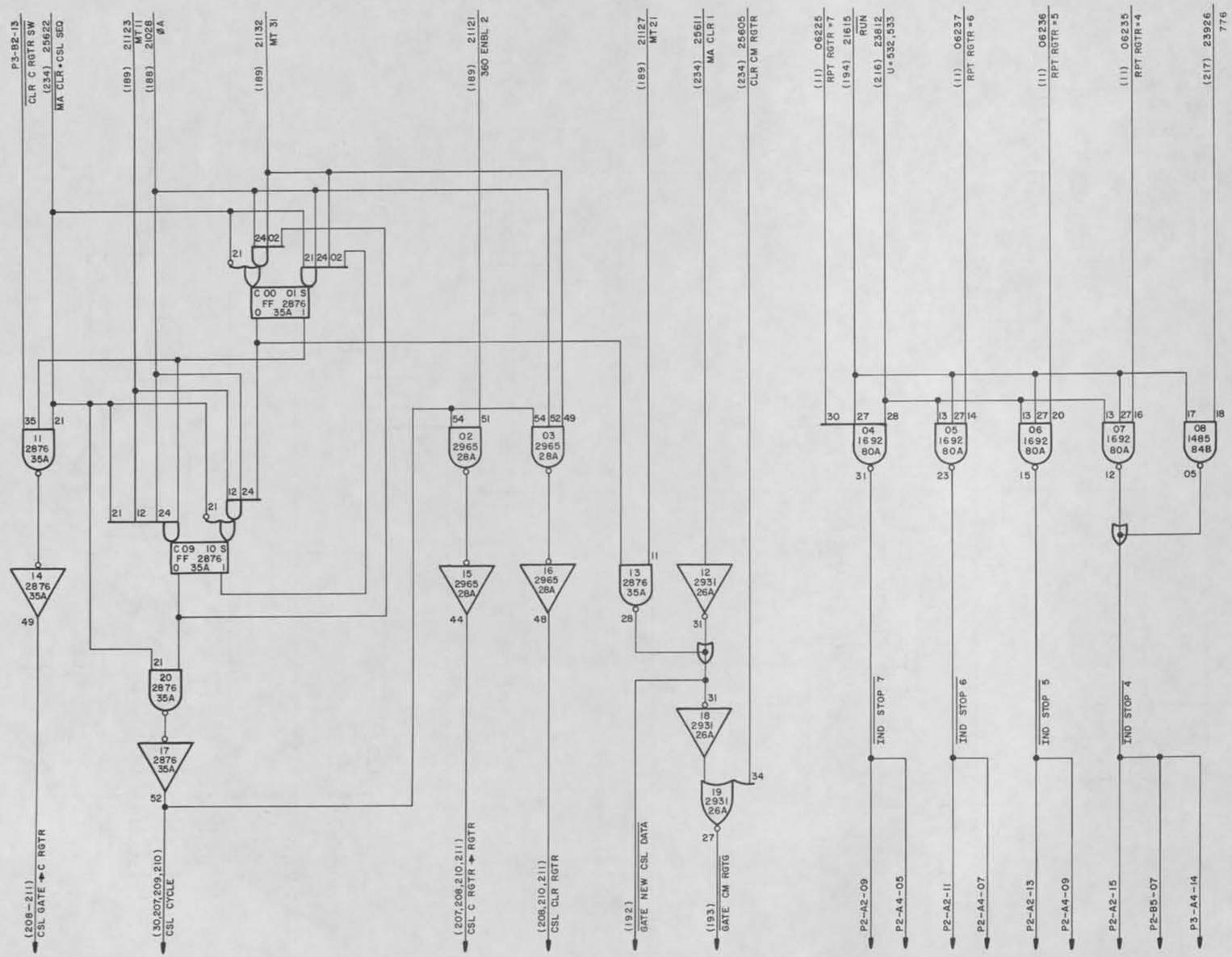

CONSOLE CYCLE AND STOP INDICATORS 217

SIZE	CODE IDENT	DWG NO.
D	90536	7073539
SCALE	CLASS A	SHEET 195

DWG. NO. 7073539

CHANGE 2

UD 1-2534C

REVISIONS						
ZONE	LTR	EIR	DESCRIPTION	CHK	DATE	APPROVED
	Y	D03399	SEE EIR			
	AM	D05722	SEE EIR		2-2-72	
	AP	D05167	SEE EIR		2-2-72	
	AU	D05750	SEE EIR		2-4-72	
	BS	D06550	SEE EIR		2-16-72	
	CA	D06588	SEE EIR		12-18-72	

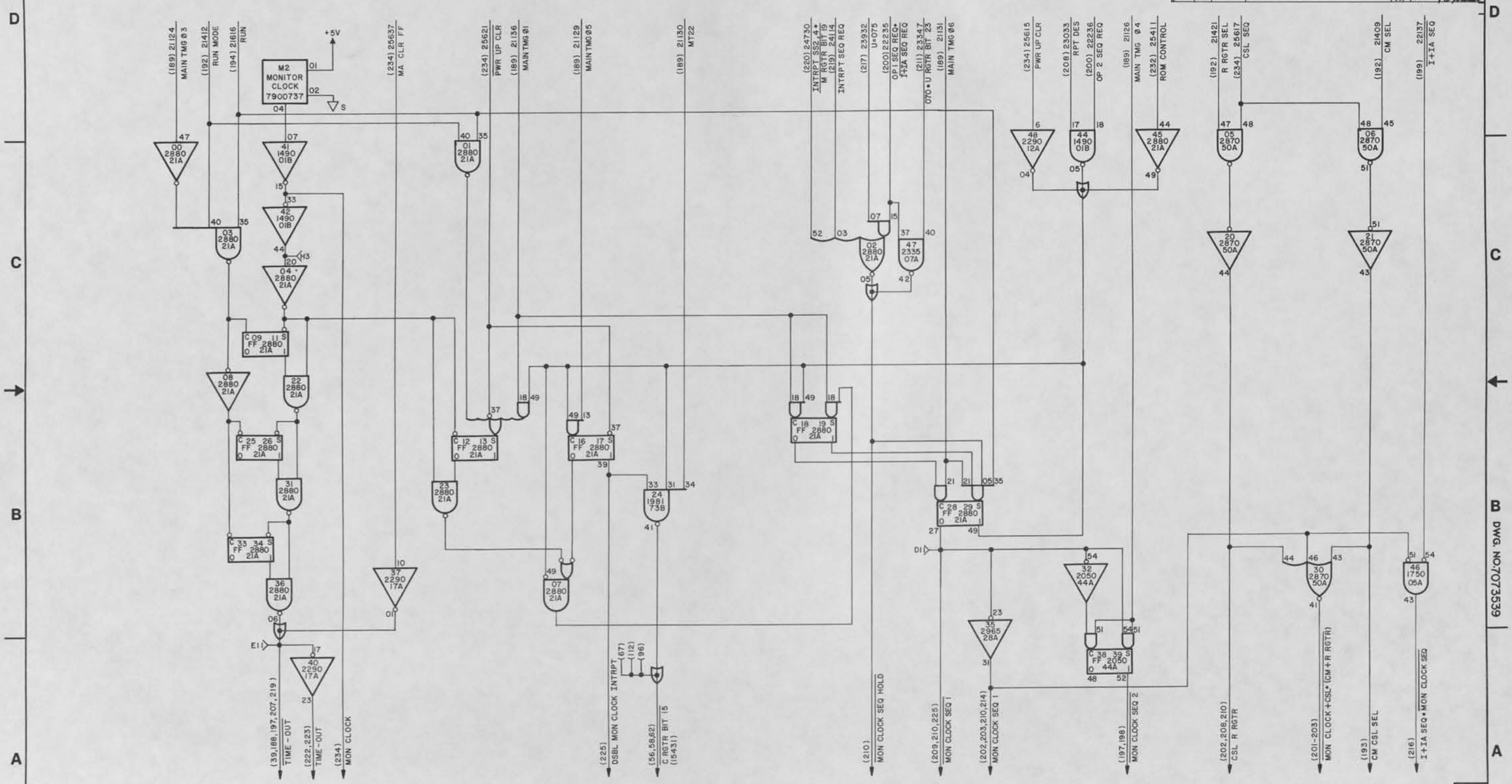

DWG. NO. 7073539

CHANGE 2

TIME-OUT & MONITOR CLOCK 218

SIZE	CODE IDENT	DWG NO.
D	90536	7073539
SCALE	CLASS A	SHEET 96

UD 1-8534C

REVISIONS						
ZONE	LTR	EIR	DESRIPTION	CHK	DATE	APPROVED
	BM	D06512	SEE EIR		5-15-71	
	CA	D06588	SEE EIR		12-13-71	
	CK	D09611	SEE EIR		12-27-71	

REVISIONS						
ZONE	LTR	EIR	DESCRIPTION	CHK	DATE	APPROVED
	T	D03208	SEE EIR		5-5-71	
	AC	D05087	SEE EIR		1-21-72	
	AM	D05722	SEE EIR		2-2-72	
	AZ	D05882	SEE EIR		1-9-72	
	BC	D05859	SEE EIR		2-11-72	
	BD	D06049	SEE EIR		2-12-72	
	BJ	D06509	SEE EIR		2-14-72	

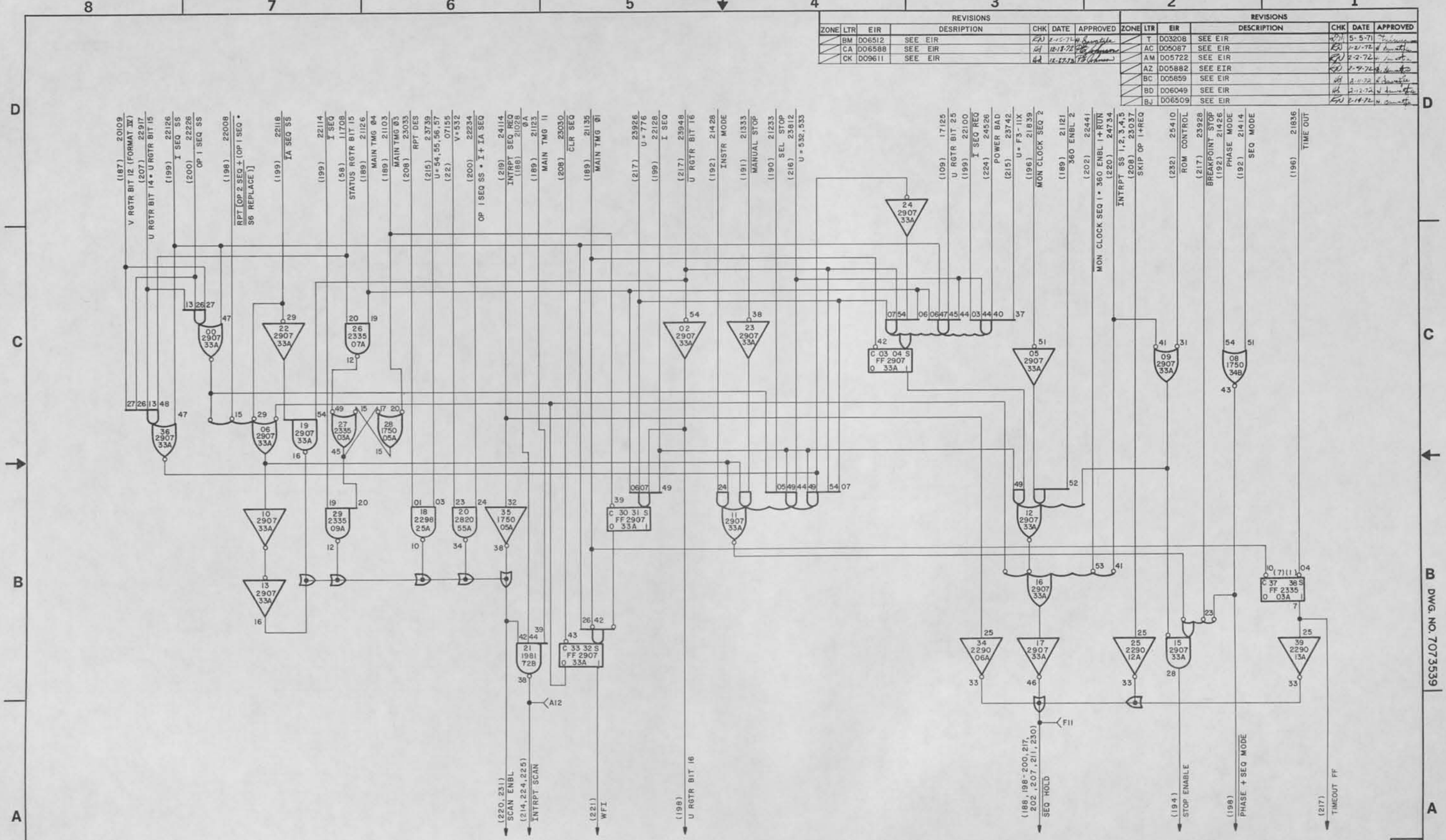

SEQUENCE HOLD & STOP ENABLE 219

SIZE	CODE IDENT	DWG NO.
D	90536	7073539
SCALE	CLASS A	SHEET 97

DWG. NO. 7073539

CHANGE 2

UD 1-8534C

REVISIONS						
ZONE	LTR	EIR	DESCRIPTION	CHK	DATE	APPROVED
	AD	D05048	SEE EIR		1-26-72	
	BV	D06076	SEE EIR		2-18-72	
	CA	D06588	SEE EIR		12-18-72	

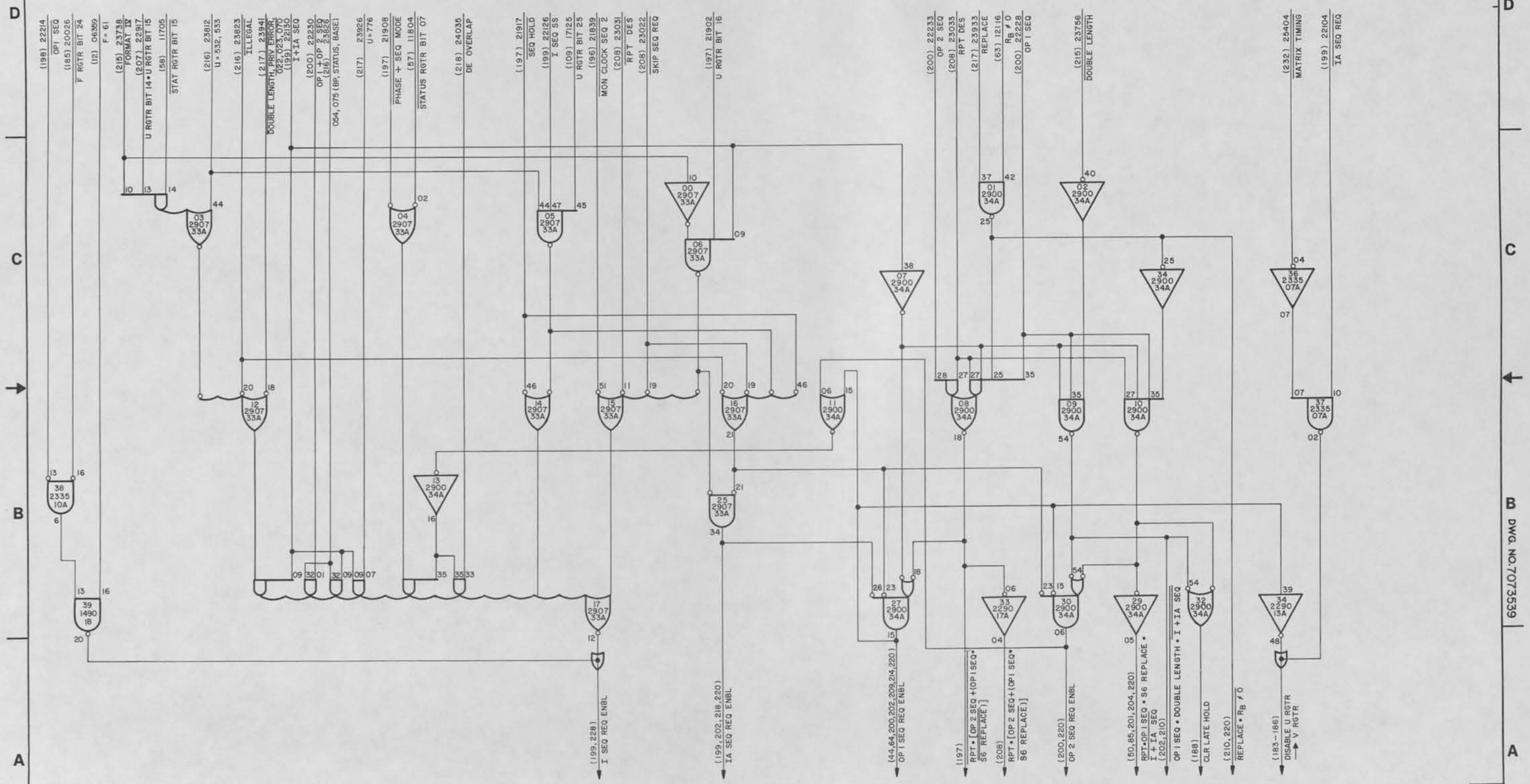

SEQUENCE REQUEST ENABLES 220

SIZE	CODE IDENT	DWG NO.
D	90536	7073539
SCALE	CLASS A	SHEET 198

DWG. NO. 7073539

CHANGE 2

UD 1-8534C

REVISIONS						
ZONE	LTR	EIR	DESCRIPTION	CHK	DATE	APPROVED
	W	D03391	SEE EIR	CAB	6-18-71	Stulmer
	Y	D03399	SEE EIR	RAB	6-30-71	Stulmer
	AF	D04719	SEE EIR	RW	1-27-72	[illegible]
	AH	D04915	SEE EIR	RW	1-31-72	[illegible]
	AK	D05145	SEE EIR	RW	2-1-72	[illegible]
	AN	D05753	SEE EIR	RW	2-2-72	[illegible]
	AS	D05195	SEE EIR	RW	2-3-72	[illegible]
	BC	D05859	SEE EIR	[illegible]	8-8-72	[illegible]

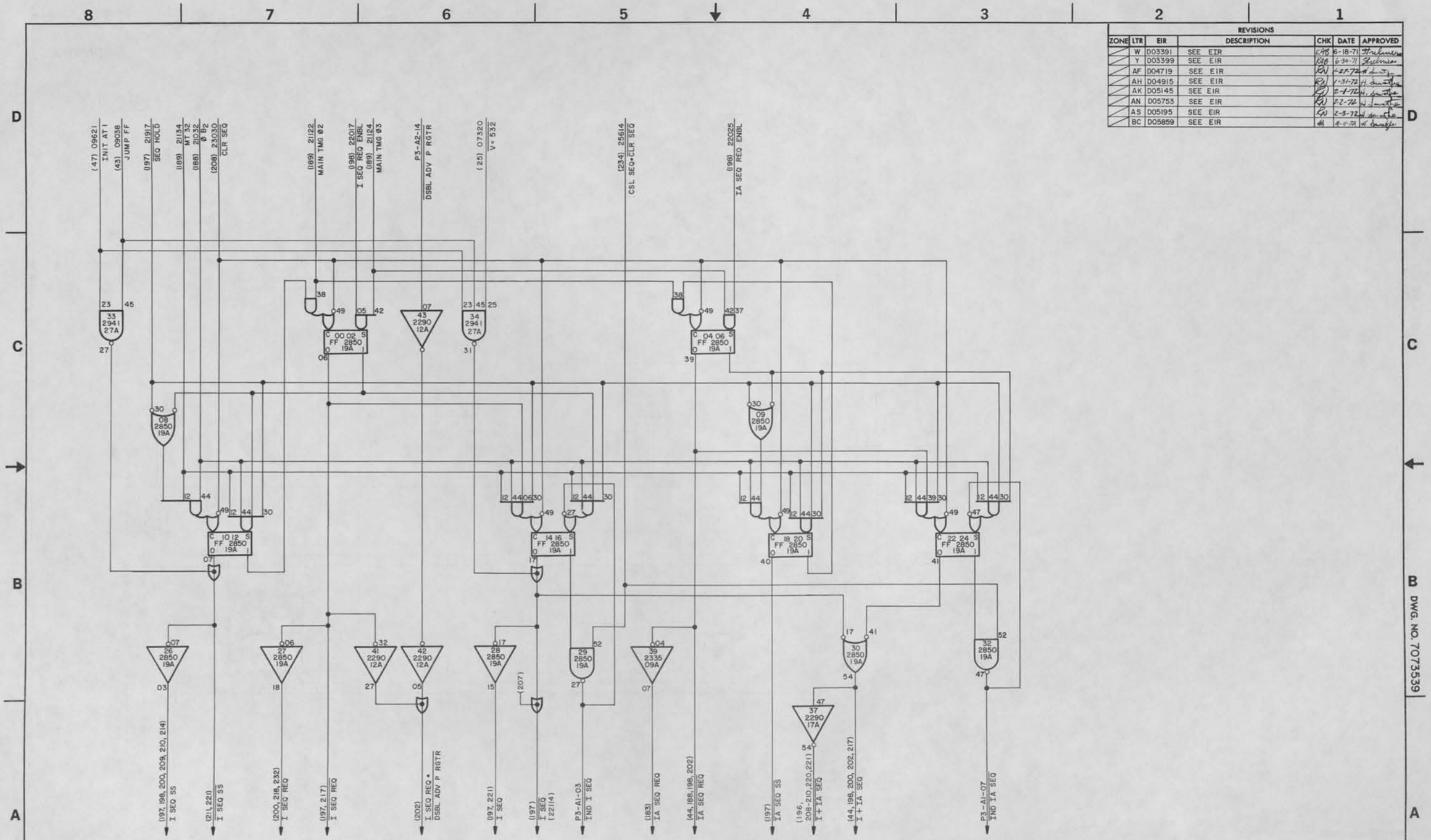

SEQUENCER I + IA 221

SIZE	CODE IDENT	DWG NO.
D	90536	7073539
SCALE	CLASS A	SHEET 99

DWG. NO. 7073539

UD 1-8534C

REVISIONS						
ZONE	LTR	EIR	DESCRIPTION	CHK	DATE	APPROVED
	AT	D05729	SEE EIR		2-5-72	
	BC	D05859	SEE EIR		2-11-72	
	BK	D06510	SEE EIR		2-14-72	
	BV	D06076	SEE EIR		2-18-72	
	CA	D06588	SEE EIR		12-13-72	

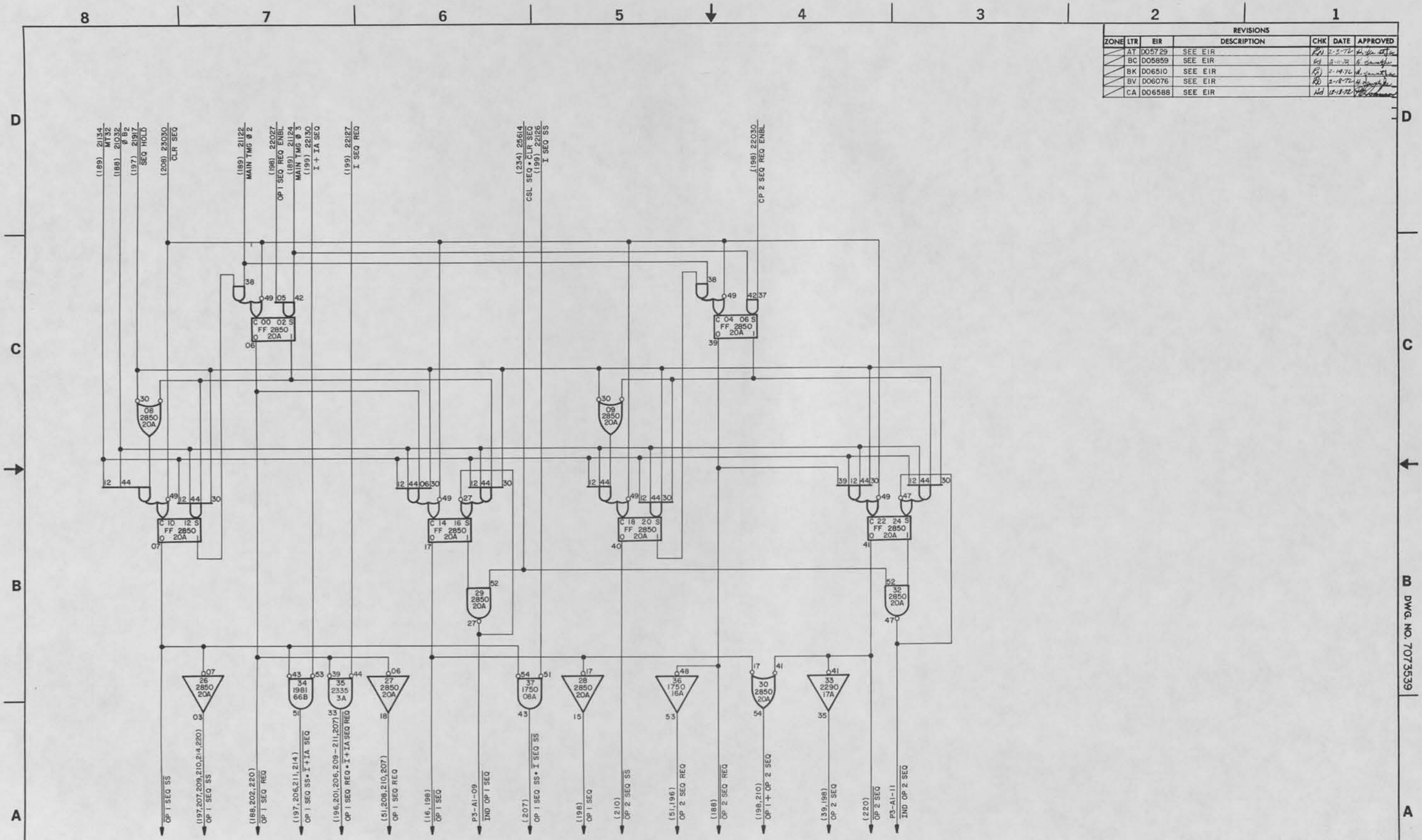

CHANGE 2

SEQUENCER OP I & OP 2 | 222

SIZE	CODE IDENT	DWG NO.
D	90536	7073539
SCALE	CLASS A	SHEET 200

DWG. NO. 7073539

UD 1-8534C

REVISIONS						
ZONE	LTR	EIR	DESCRIPTION	CHK	DATE	APPROVED
	AK	D05145	SEE EIR		2-1-71	
	AL	D05168	SEE EIR		2-1-72	
	CH	D07732	SEE EIR		12-12-73	

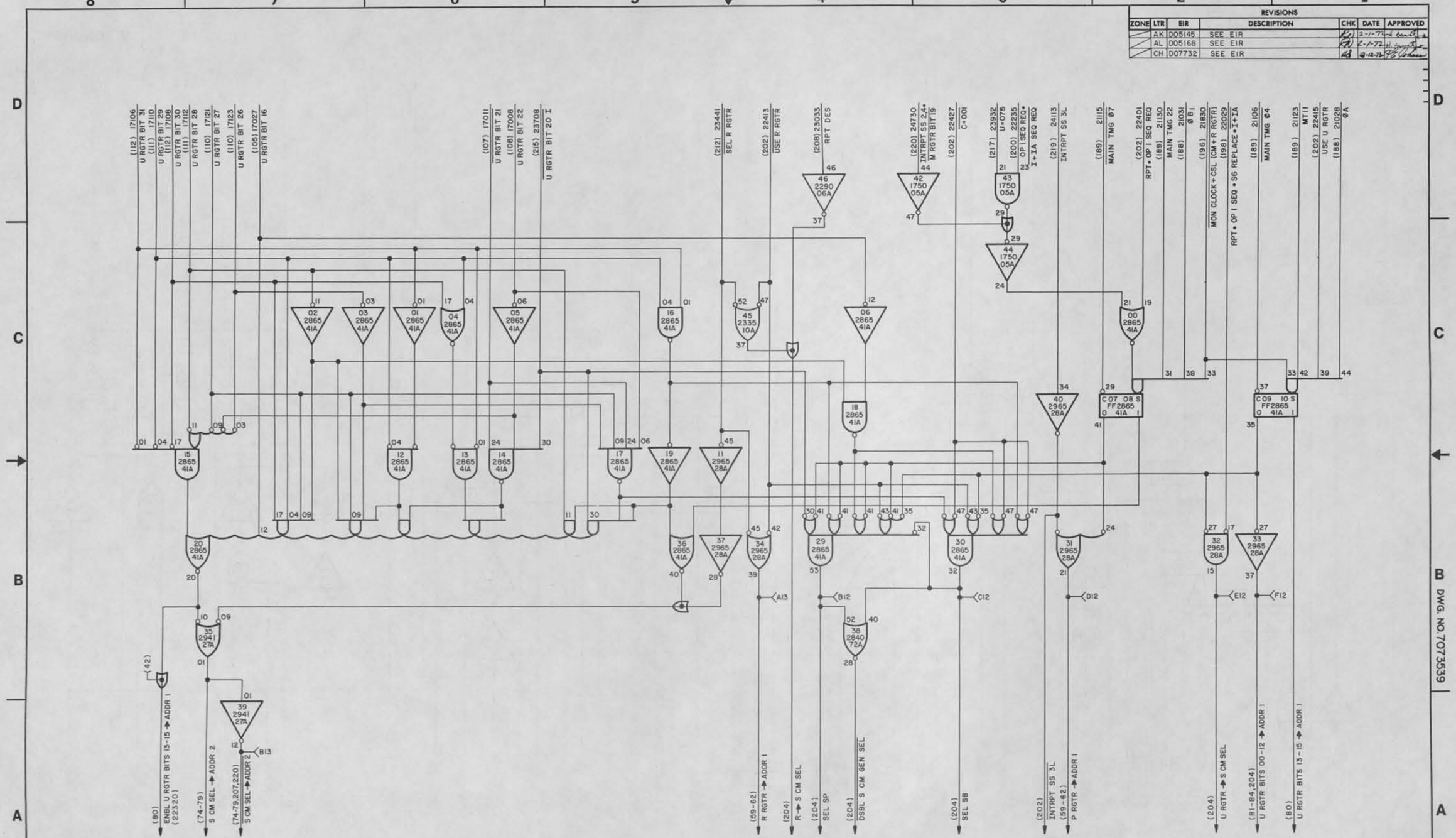

ADDRESS FORMATION CONTROL I 223

CHANGE 2

SIZE	CODE IDENT	DWG NO.
D	90536	7073539
SCALE	CLASS A	SHEET 201

DWG. NO. 7073539

UD 1-8534C

REVISIONS						
ZONE	LTR	EIR	DESCRIPTION	CHK	DATE	APPROVED
	AF	D04719	SEE EIR		1-27-72	
	AK	D05145	SEE EIR		2-1-72	
	CA	D06588	SEE EIR		12-13-72	
	CG	D10463	SEE EIR		10-9-73	

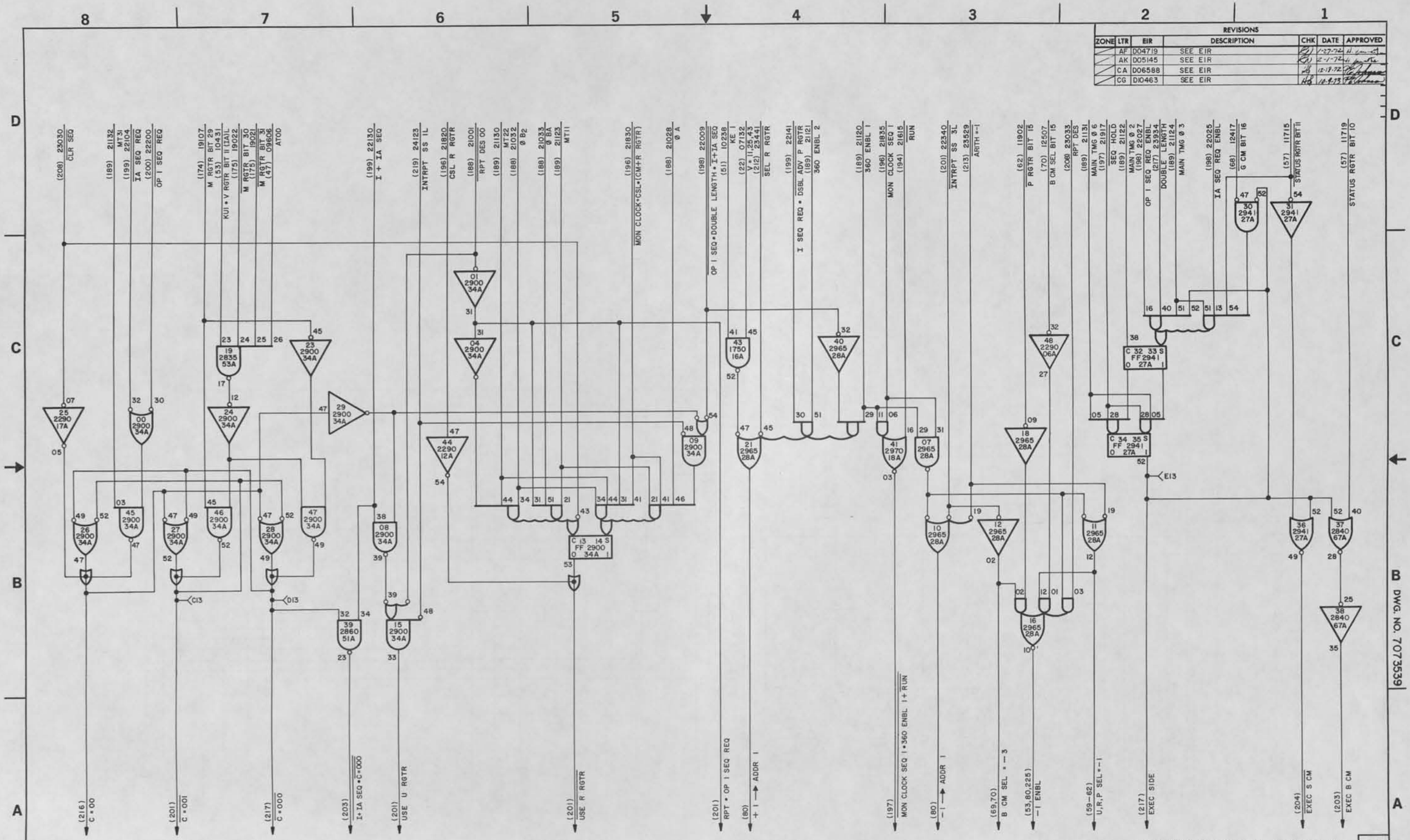

ADDRESS FORMATION CONTROL 2 | 224

SIZE	CODE IDENT	DWG NO.
D	90536	7073539
SCALE	CLASS A	SHEET 202

DWG. NO. 7073539

CHANGE 2

UD 1-8534C

REVISIONS						
ZONE	LTR	EIR	DESCRIPTION	CHK	DATE	APPROVED
	U	D03206	SEE EIR		5-6-71	
	Y	D03399	SEE EIR		5-24-71	
	BU	D06551	SEE EIR		2-17-72	
	CA	D06588	SEE EIR		12-19-72	

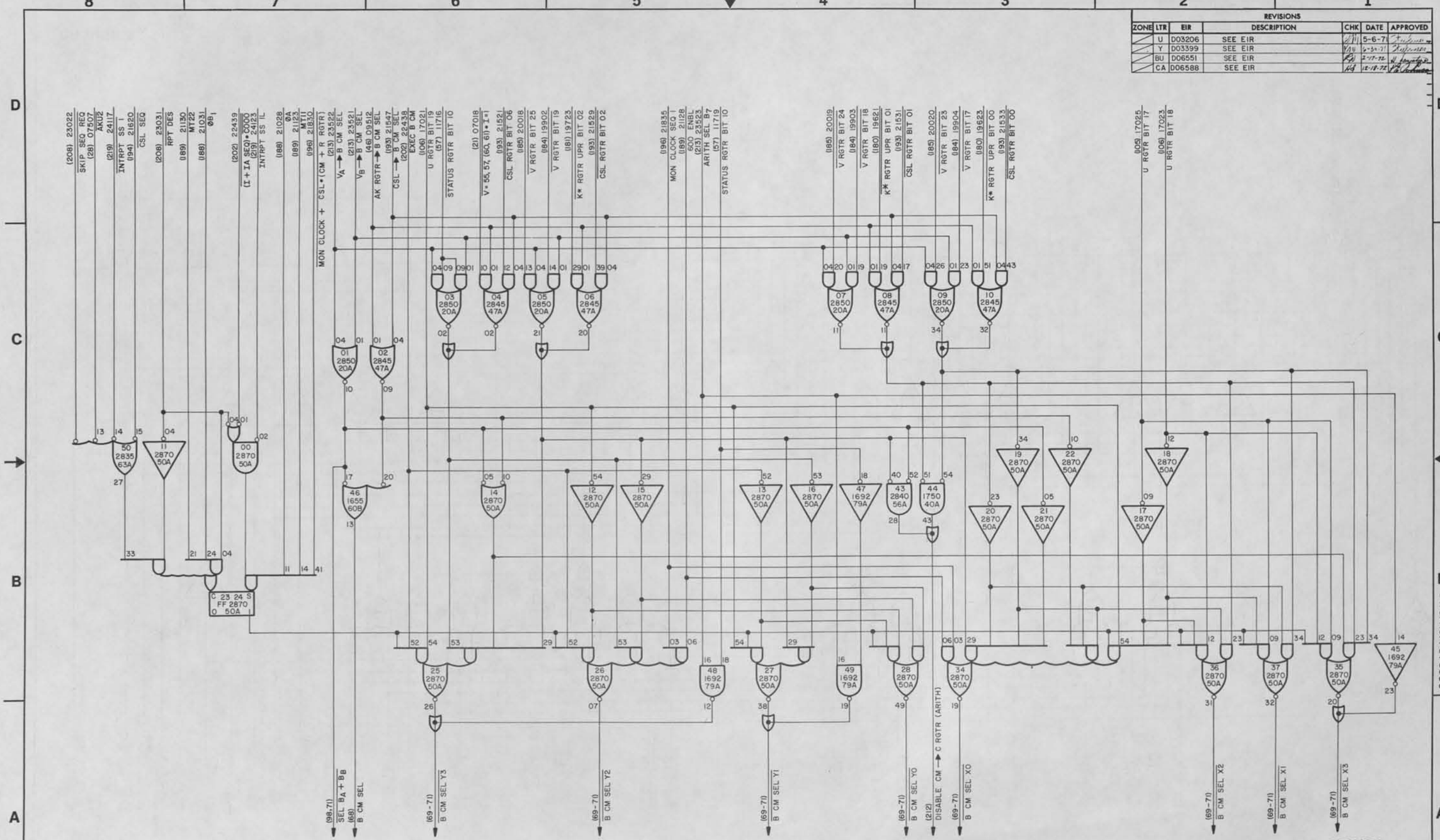

B CONTROL MEMORY ADDRESS SELECTOR

225

CHANGE 2

SIZE	CODE IDENT	DWG NO.
D	90536	7073539
SCALE	CLASS A	SHEET 203

DWG. NO. 7073539

UD 1-3534C

REVISIONS						
ZONE	LTR	EIR	DESCRIPTION	CHK	DATE	APPROVED
	Y	D03399	SEE EIR			
	CH	D07732	SEE EIR			

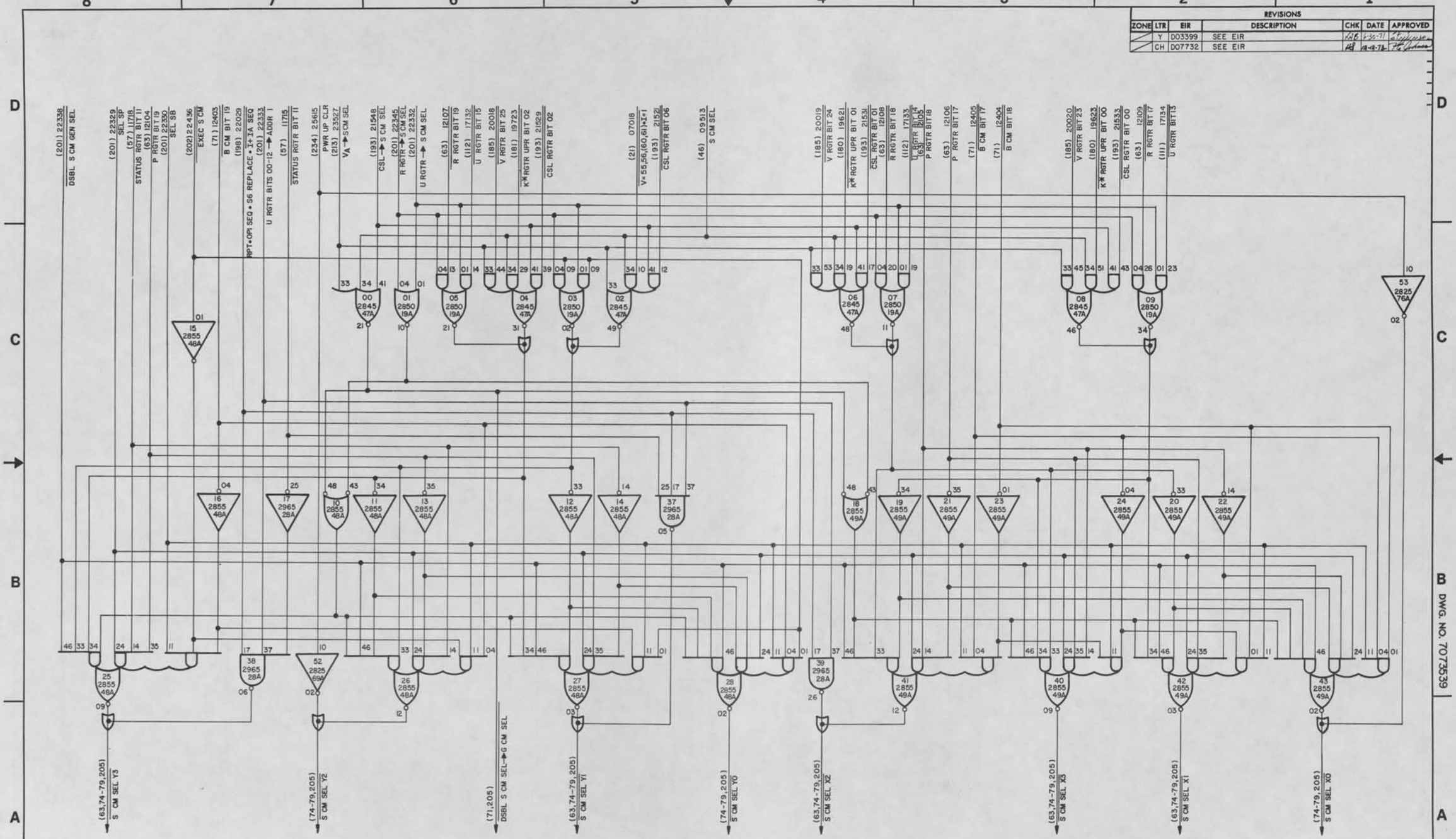

CHANGE 2

S CONTROL MEMORY
ADDRESS SELECTOR

226

SIZE	CODE IDENT	DWG NO.
D	90536	7073539
SCALE	CLASS A	SHEET 204

DWG. NO. 7073539

UD 1-8534C

REVISIONS						
ZONE	LTR	EIR	DESCRIPTION	CHK	DATE	APPROVED

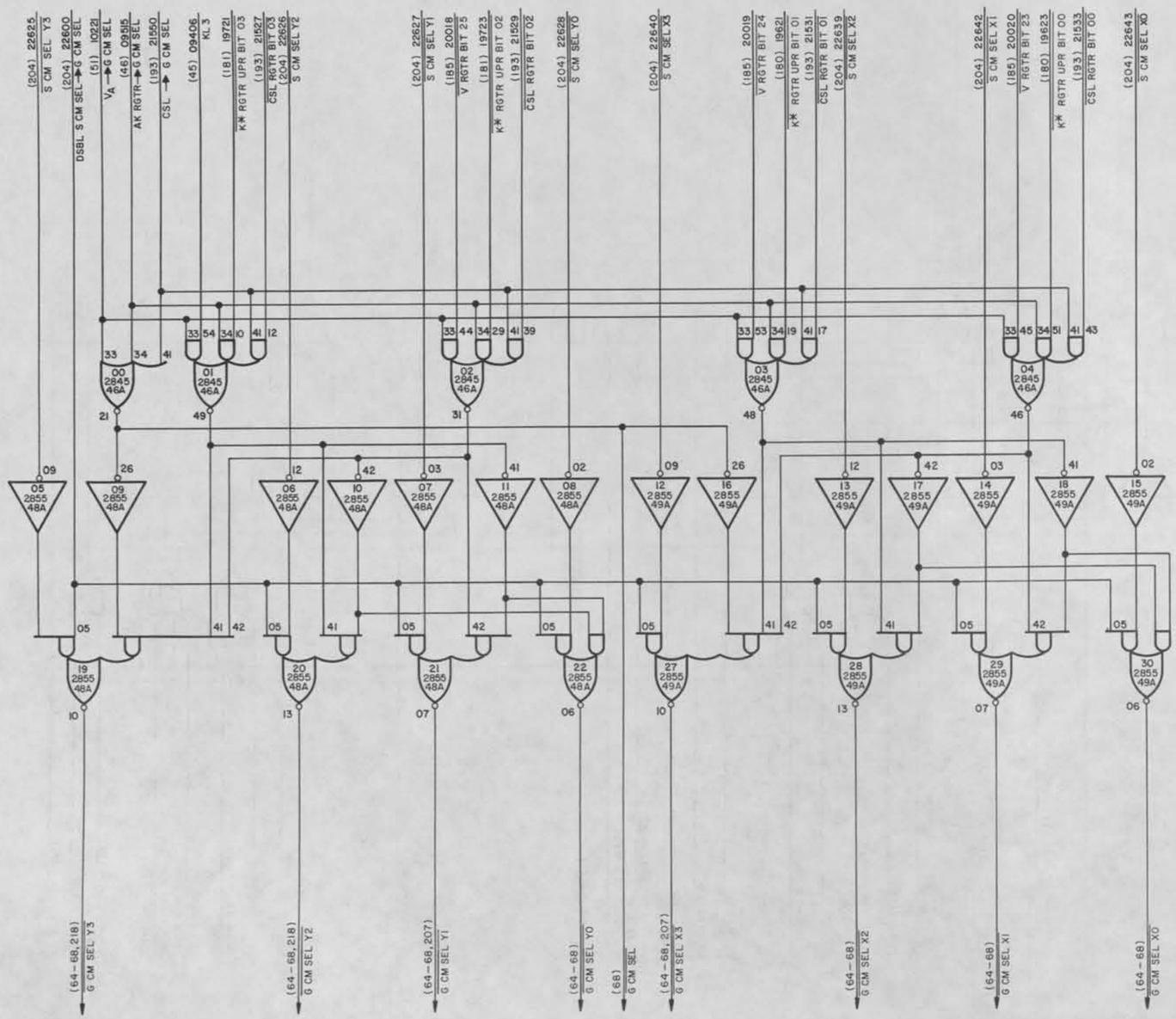

G CONTROL MEMORY ADDRESS SELECTOR

227

SIZE	CODE IDENT	DWG NO.
D	90536	7073539
SCALE	CLASS A	SHEET 205

DWG. NO.

UD 1-8534C

REVISIONS						
ZONE	LTR	EIR	DESCRIPTION	CHK	DATE	APPROVED
	BJ	D06509	SEE EIR		1-14-72	
	CA	D06588	SEE EIR		11-18-72	

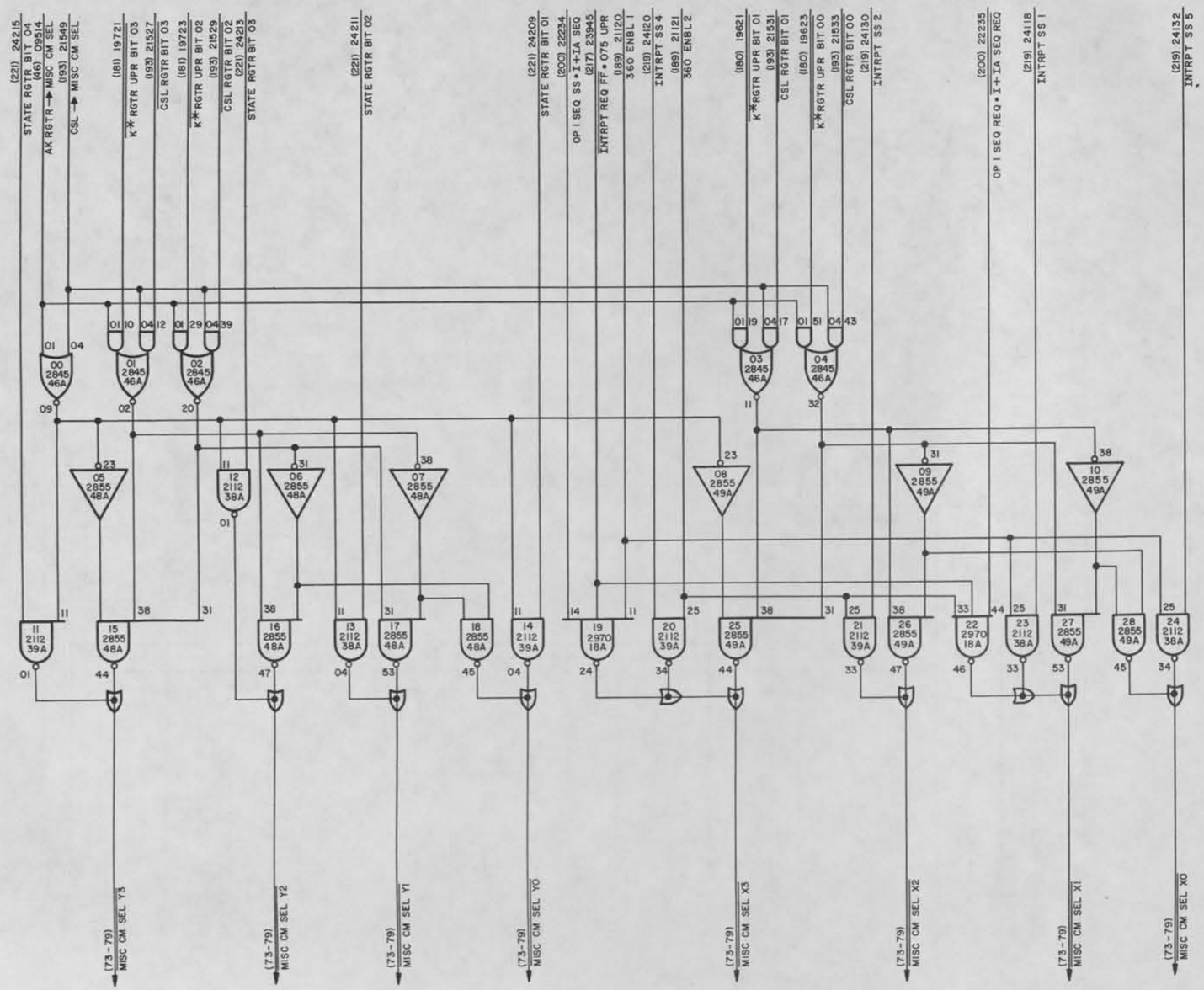

CHANGE 2

MISCELLANEOUS CONTROL MEMORY ADDRESS SELECTOR

228

SIZE	CODE IDENT	DWG NO.
D	90536	7073539
SCALE	CLASS A	SHEET 206

DWG. NO.

UD 1-8534C

REVISIONS						
ZONE	LTR	EIR	DESCRIPTION	CHK	DATE	APPROVED
	BC	D05859	REDRAWN - SEE EIR			
	BK	D06510	SEE EIR			
	CA	D06588	SEE EIR			

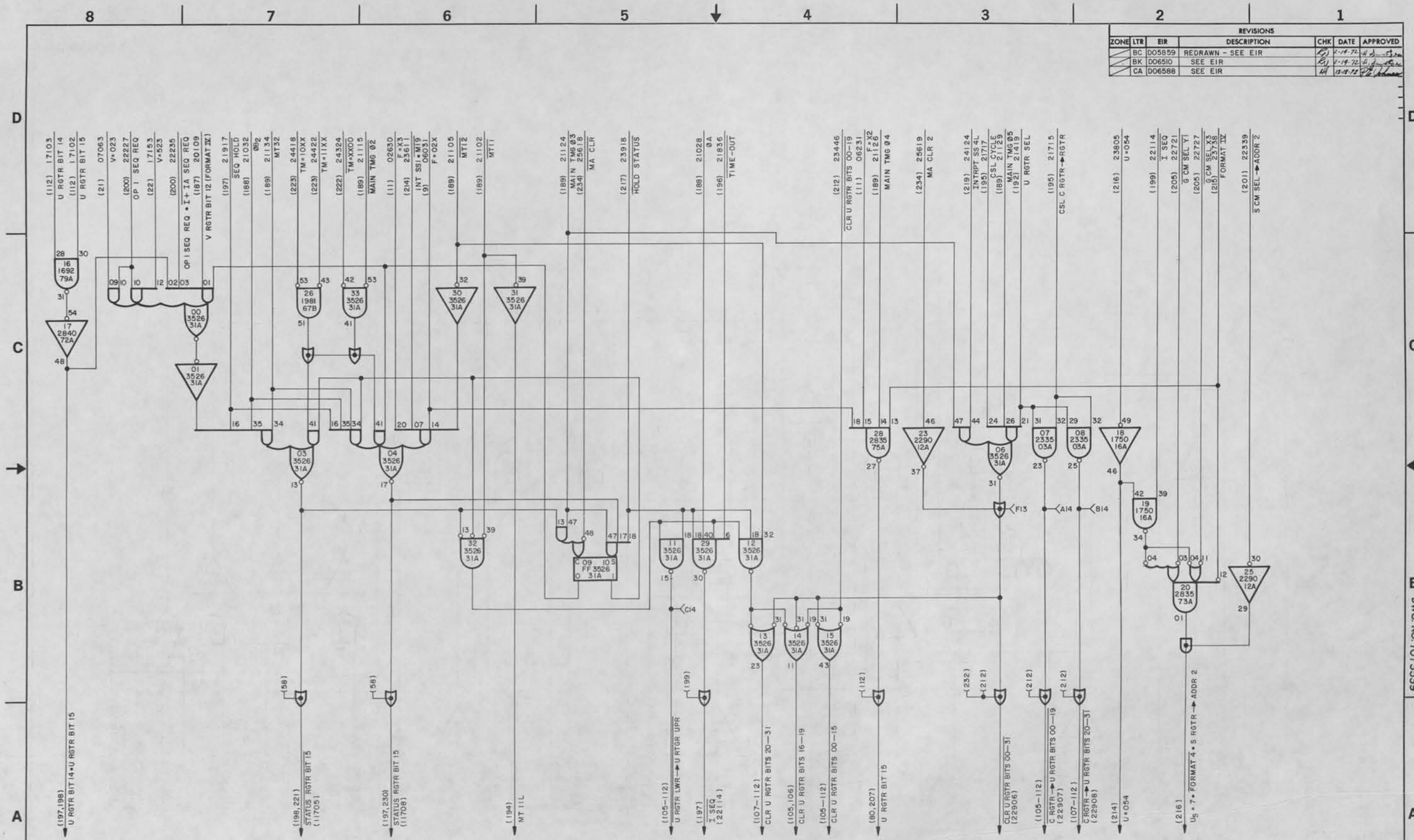

DWG. NO. 7073539

U REGISTER CONTROL 229

SIZE	CODE IDENT	DWG NO.
D	90536	7073539
SCALE	CLASS A	SHEET 207

CHANGE 2

UD 1-85340

REVISIONS						
ZONE	LTR	EIR	DESCRIPTION	CHK	DATE	APPROVED
	Z	D03599	SEE EIR		7-1-71	
	AL	D05168	SEE EIR		2-1-72	
	BL	D06511	SEE EIR		2-17-72	
	BT	D06552	SEE EIR		2-17-72	
	CA	D06588	SEE EIR		12-18-72	

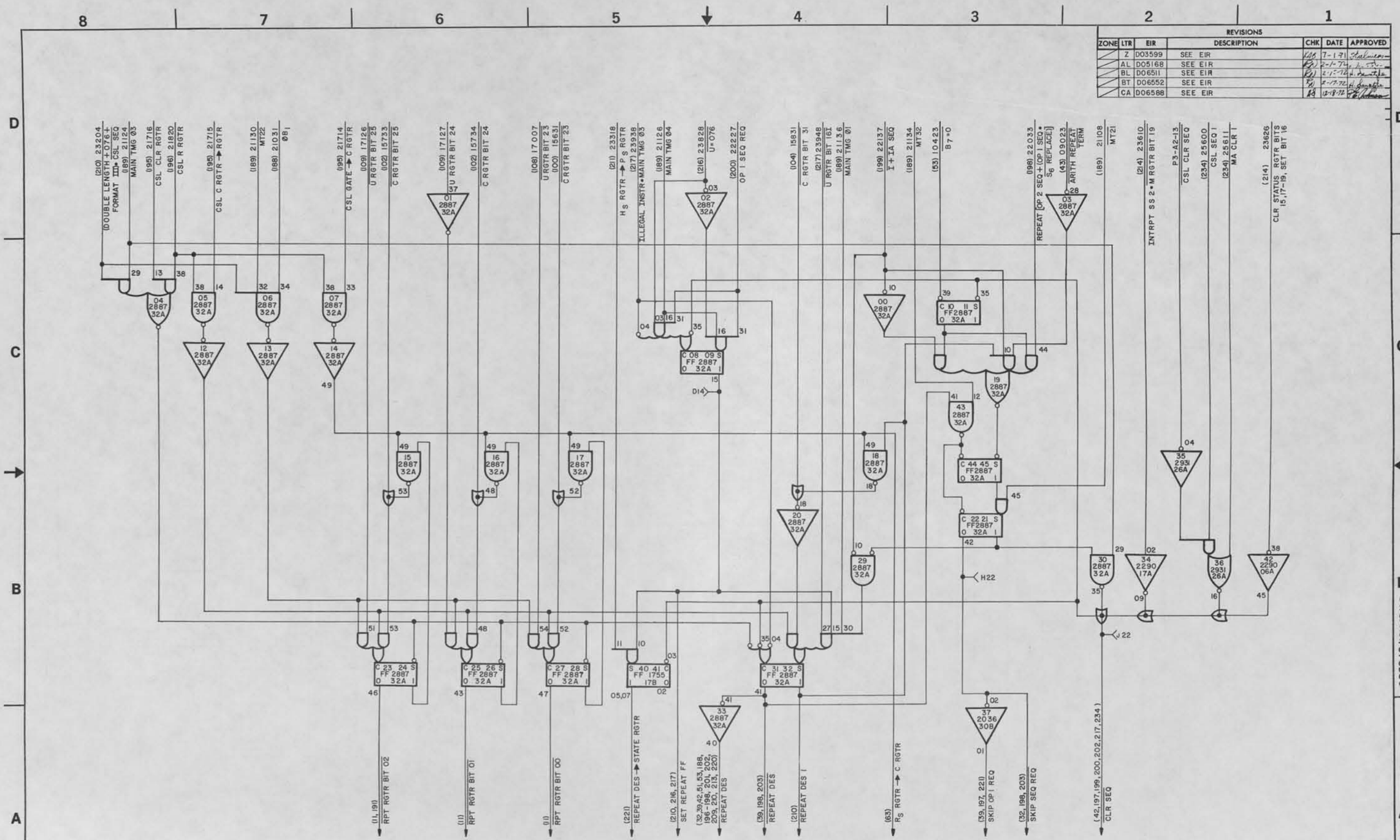

DWG. NO. 7073539

REPEAT DESIGNATOR & REPEAT REGISTER

230

SIZE	CODE IDENT	DWG NO.
D	90536	7073539
SCALE	CLASS A	SHEET 208

CHANGE 2

UD 1-8534C

REVISIONS						
ZONE	LTR	EIR	DESCRIPTION	CHK	DATE	APPROVED
	AG	D05091	SEE EIR	RJ	1-28-70	
	CA	D06588	SEE EIR	HB	12-15-72	

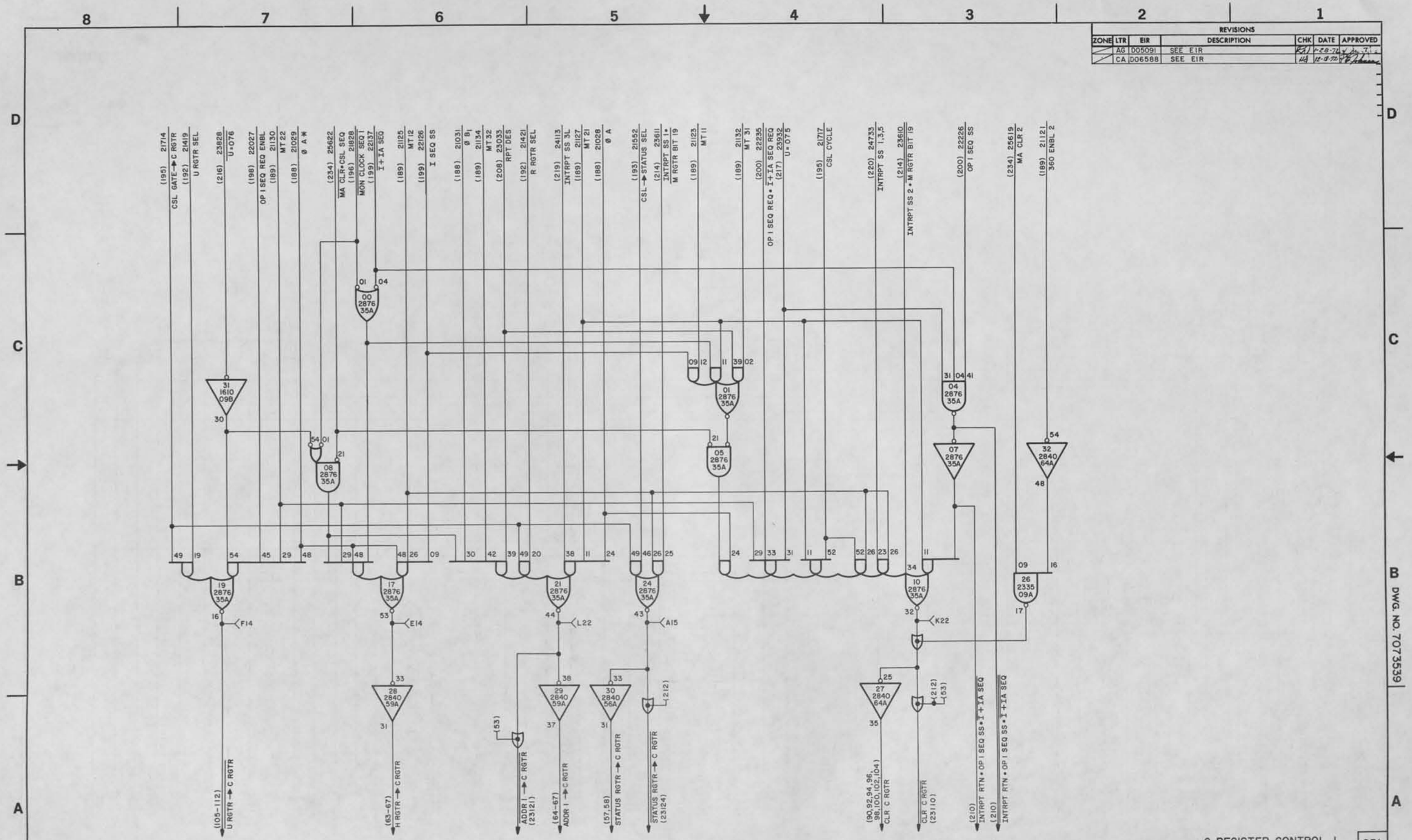

C REGISTER CONTROL I 231

SIZE	CODE IDENT	DWG NO.
D	90536	7073539
SCALE	CLASS A	SHEET 209

DWG. NO. 7073539

CHANGE 2

UD 1-8534C

REVISIONS						
ZONE	LTR	EIR	DESCRIPTION	CHK	DATE	APPROVED
	AG	D05091	SEE EIR			
	BL	D06511	SEE EIR			
	CA	D06588	SEE EIR			

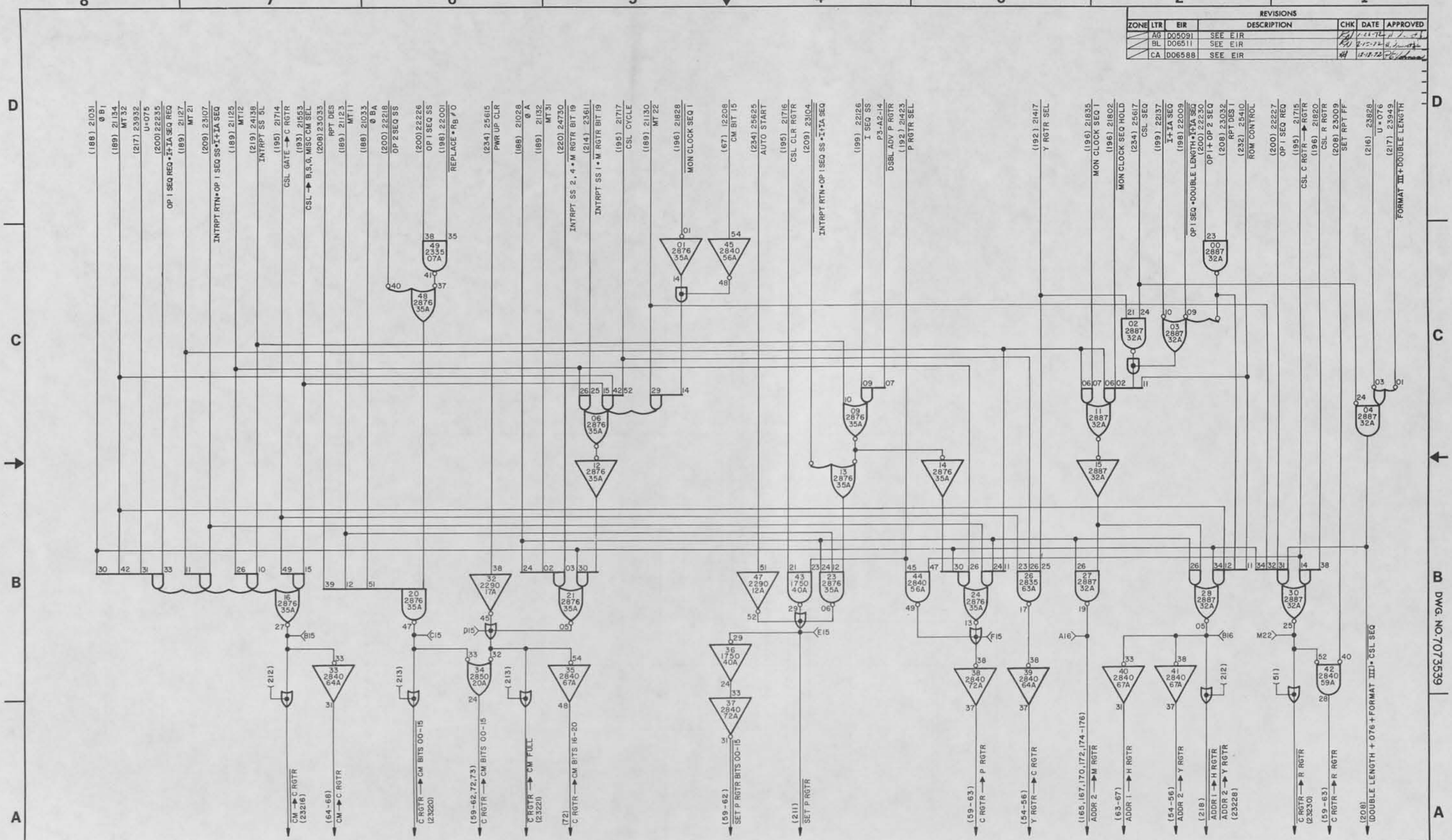

C REGISTER CONTROL 2 232

CHANGE 2

SIZE	CODE IDENT	DWG NO.
D	90536	7073539
SCALE	CLASS A	SHEET 210

DWG. NO. 7073539

UD 1-2534C

REVISIONS						
ZONE	LTR	EIR	DESCRIPTION	CHK	DATE	APPROVED
	CA	D06588	SEE EIR		12-13-72	

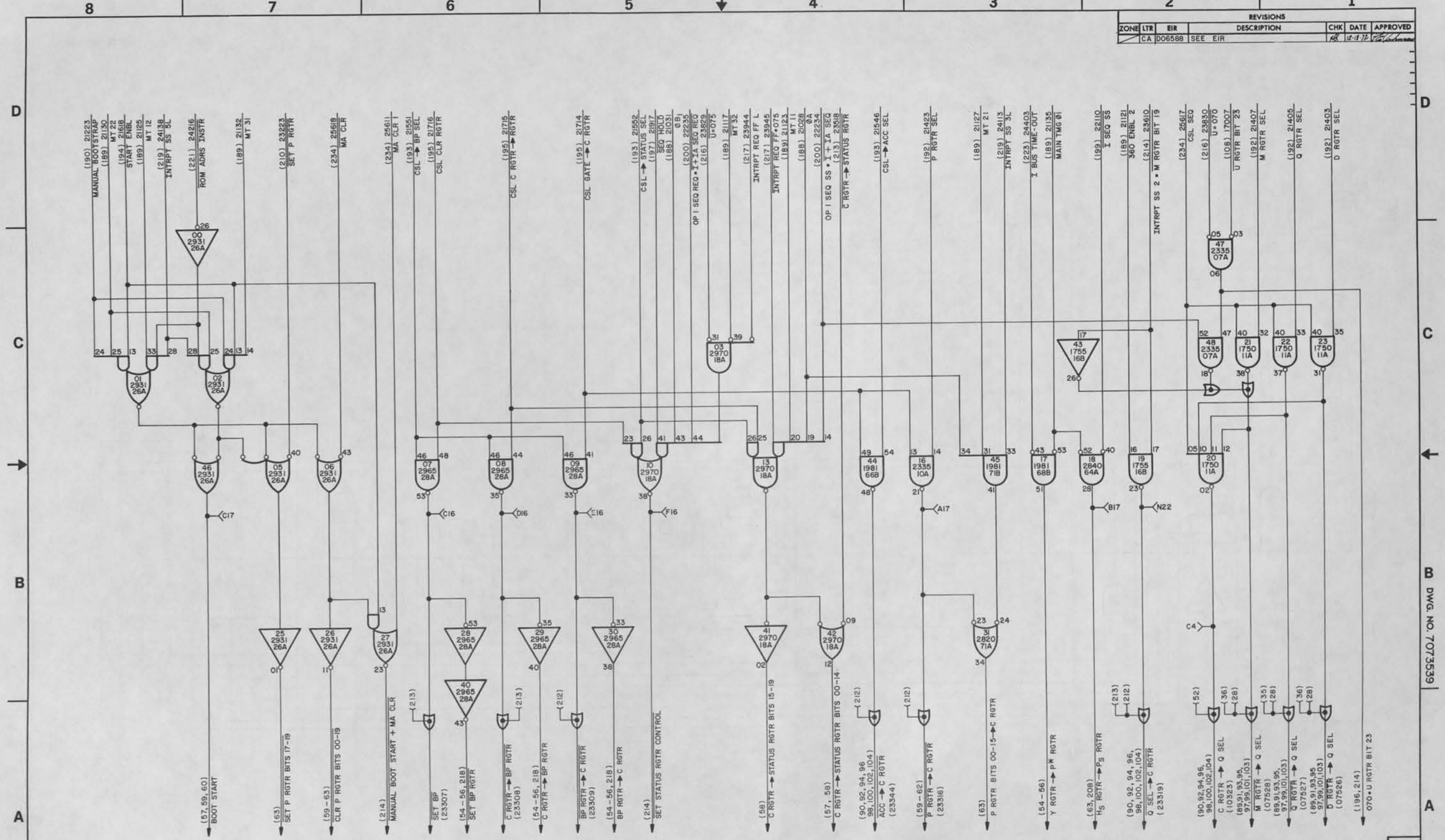

REGISTER COMMANDS 233

CHANGE 2

SIZE	CODE IDENT	DWG NO.
D	90536	7073539
SCALE	CLASS A	SHEET 211

DWG. NO. 7073539

UD 1-3534C

REVISIONS						
ZONE	LTR	EIR	DESCRIPTION	CHK	DATE	APPROVED
	Y	D03399	SEE EIR			
	AK	D05145	SEE EIR			
	AN	D05753	SEE EIR			
	CA	D06588	SEE EIR			

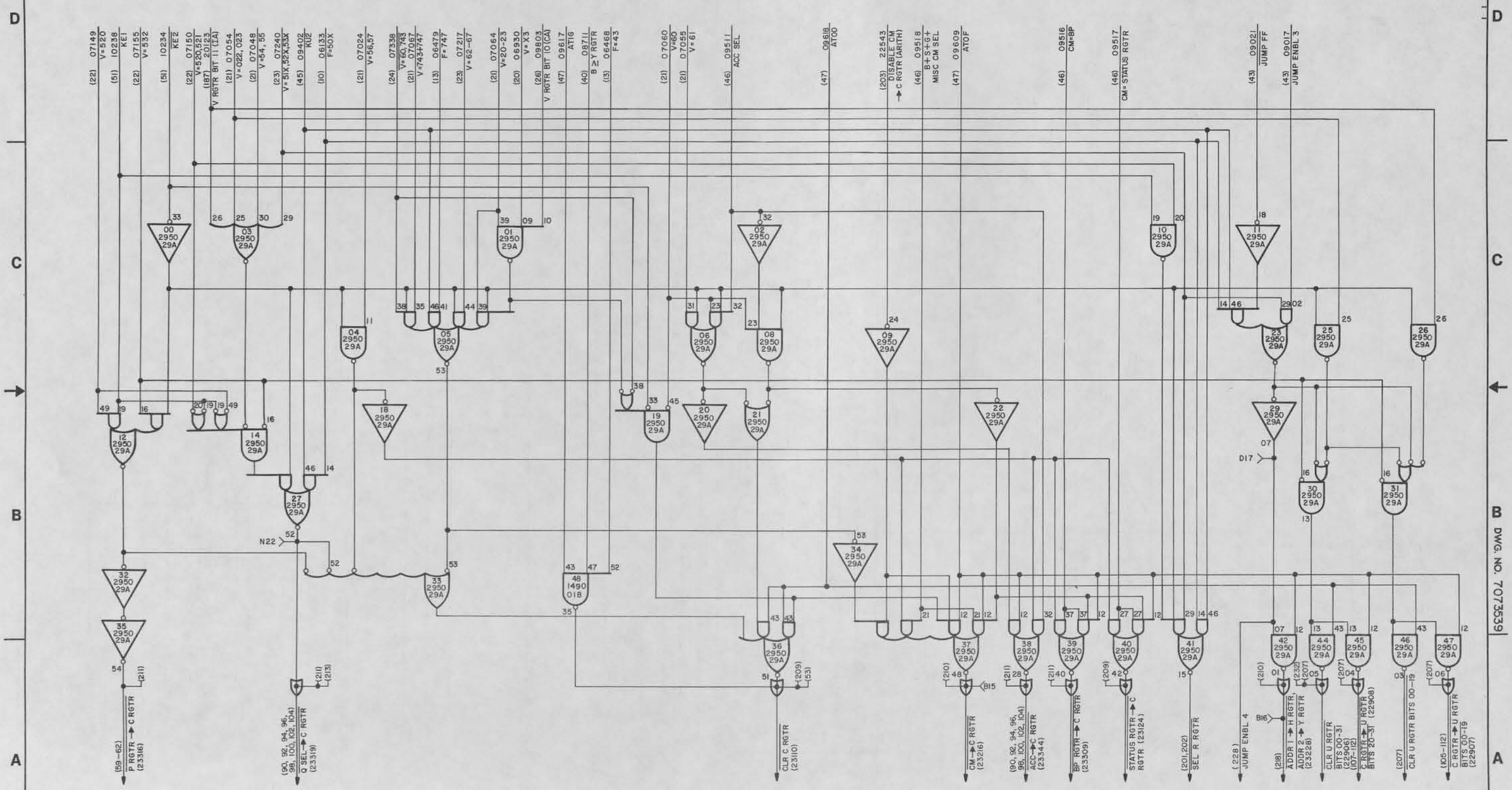

ARITHMETIC → CONTROL COMMANDS 234

CHANGE 2

SIZE	CODE IDENT	DWG NO.
D	90536	7073539
SCALE	CLASS A	SHEET 212

DWG. NO. 7073539

UD 1-8534C

REVISIONS						
ZONE	LTR	EIR	DESCRIPTION	CHK	DATE	APPROVED
	CA	D06588	SEE EIR		18-11-72	

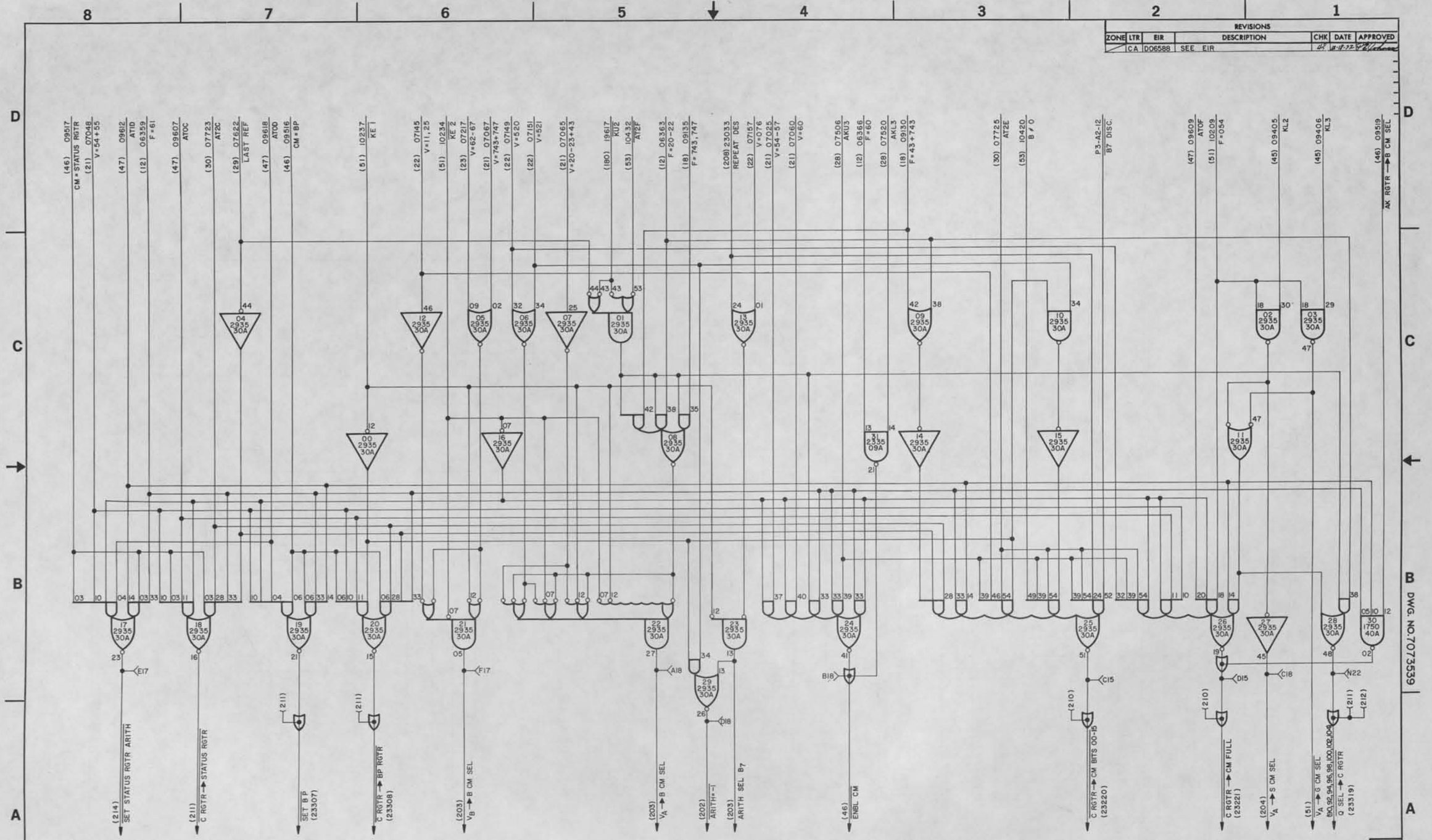

ARITHMETIC CONTROL MEMORY COMMANDS 235

CHANGE 2

SIZE	CODE IDENT	DWG NO.
D	90536	7073539
SCALE	CLASS A	SHEET 213

UD 1-8534C

REVISIONS						
ZONE	LTR	EIR	DESCRIPTION	CHK	DATE	APPROVED
	Z	D03599	SEE EIR		7-1-71	
	AH	D04915	SEE EIR		1-31-72	
	AT	D05729	SEE EIR		11-2-72	
	CA	D06588	SEE EIR		12-18-72	
	CF	D09563	SEE EIR		7-19-73	
	CG	D10463	SEE EIR		10-9-73	

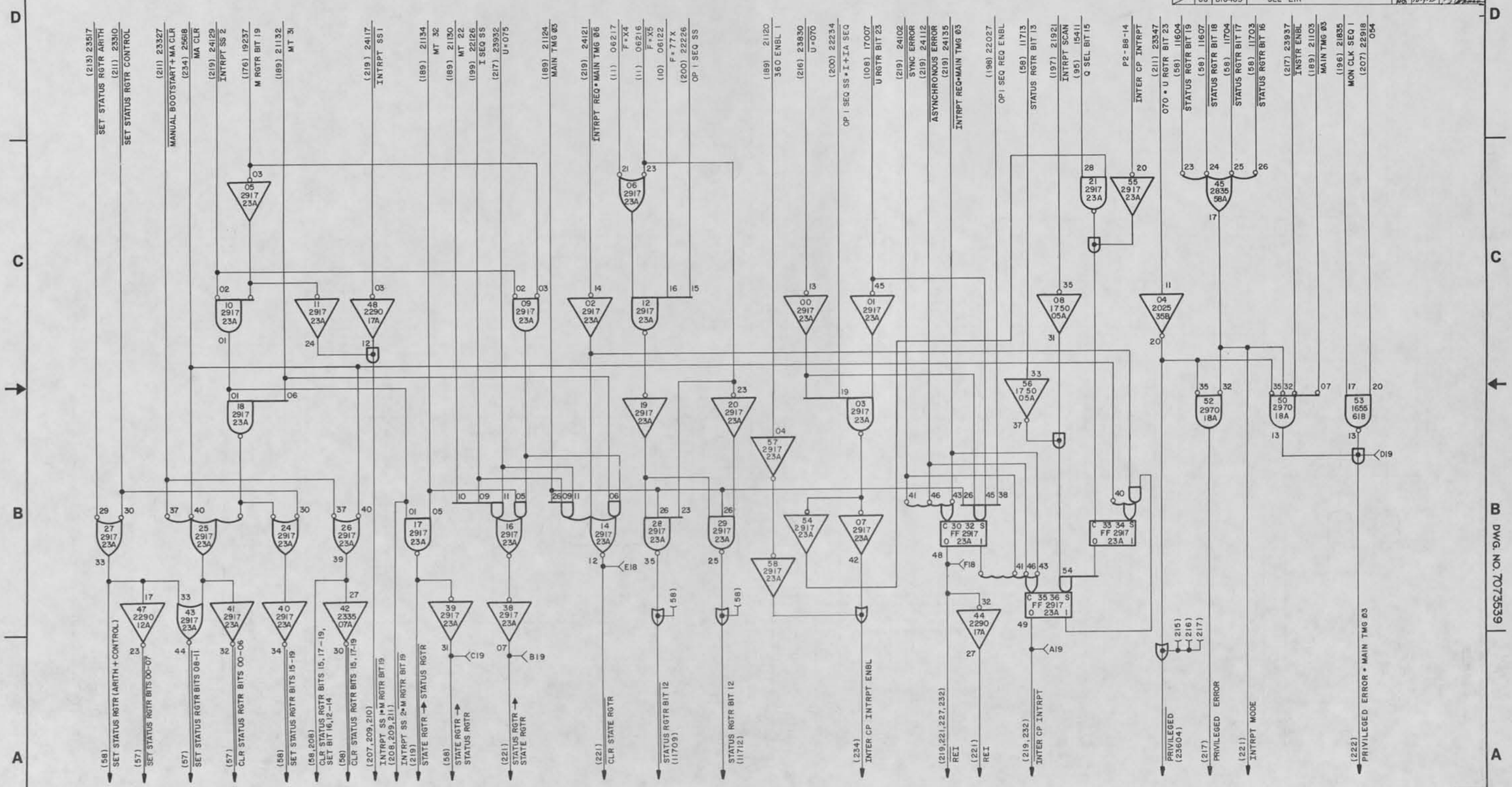

CLEAR STATUS & REI 236

CHANGE 2

SIZE	CODE IDENT	DWG NO.
D	90536	7073539
SCALE	CLASS A	SHEET 2/4

DWG. NO. 7073539

UD 1-8534C

REVISIONS						
ZONE	LTR	EIR	DESCRIPTION	CHK	DATE	APPROVED
	AT	D05729	SEE EIR		2-5-72	

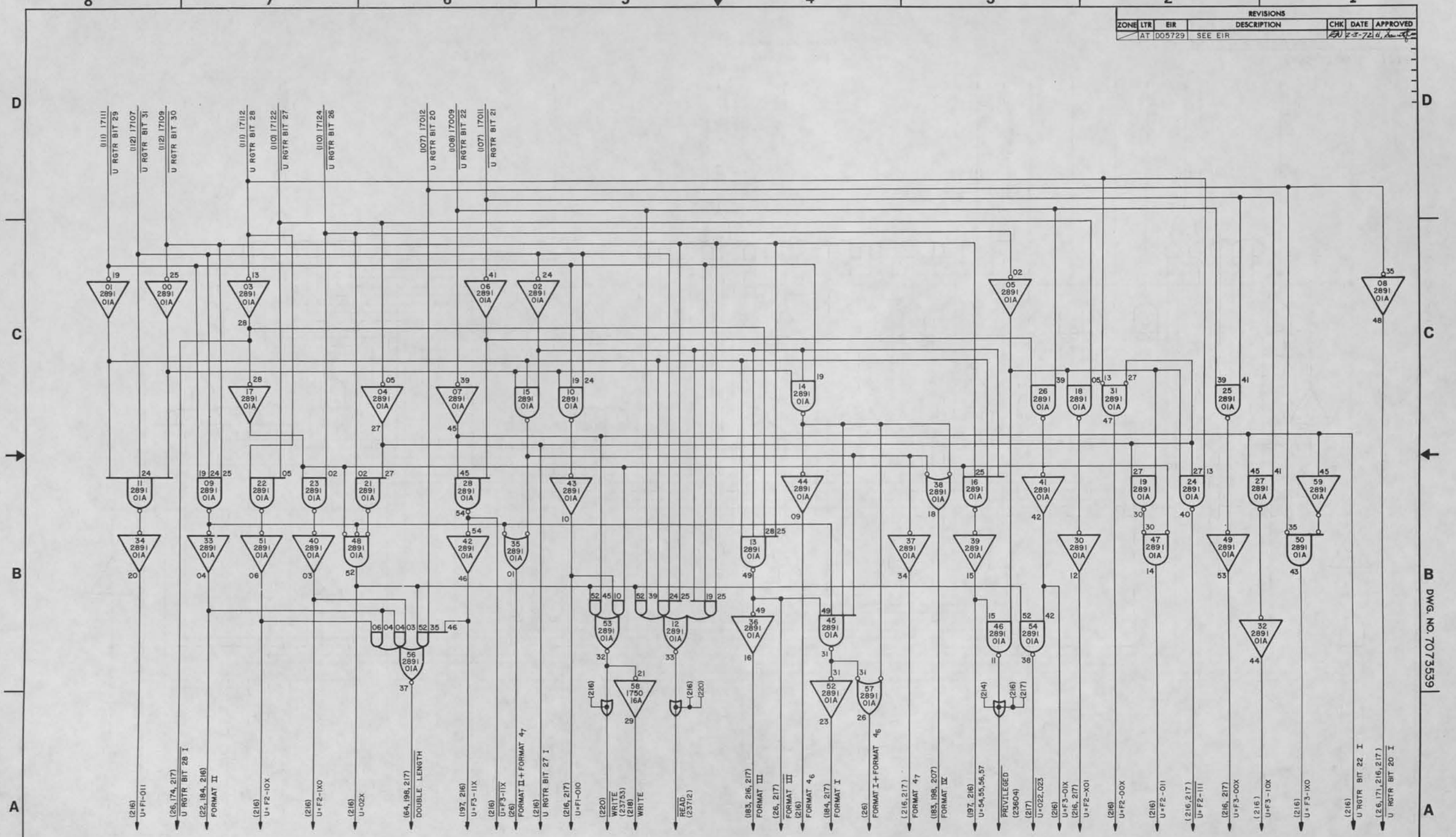

U TRANSLATION I 237

SIZE	CODE IDENT	DWG NO.
D	90536	7073539
SCALE	CLASS A	SHEET 215

UD 1-8534C

REVISIONS						
ZONE	LTR	EIR	DESCRIPTION	CHK	DATE	APPROVED
	W	D03391	SEE EIR	RFB	6-18-71	Fulmer

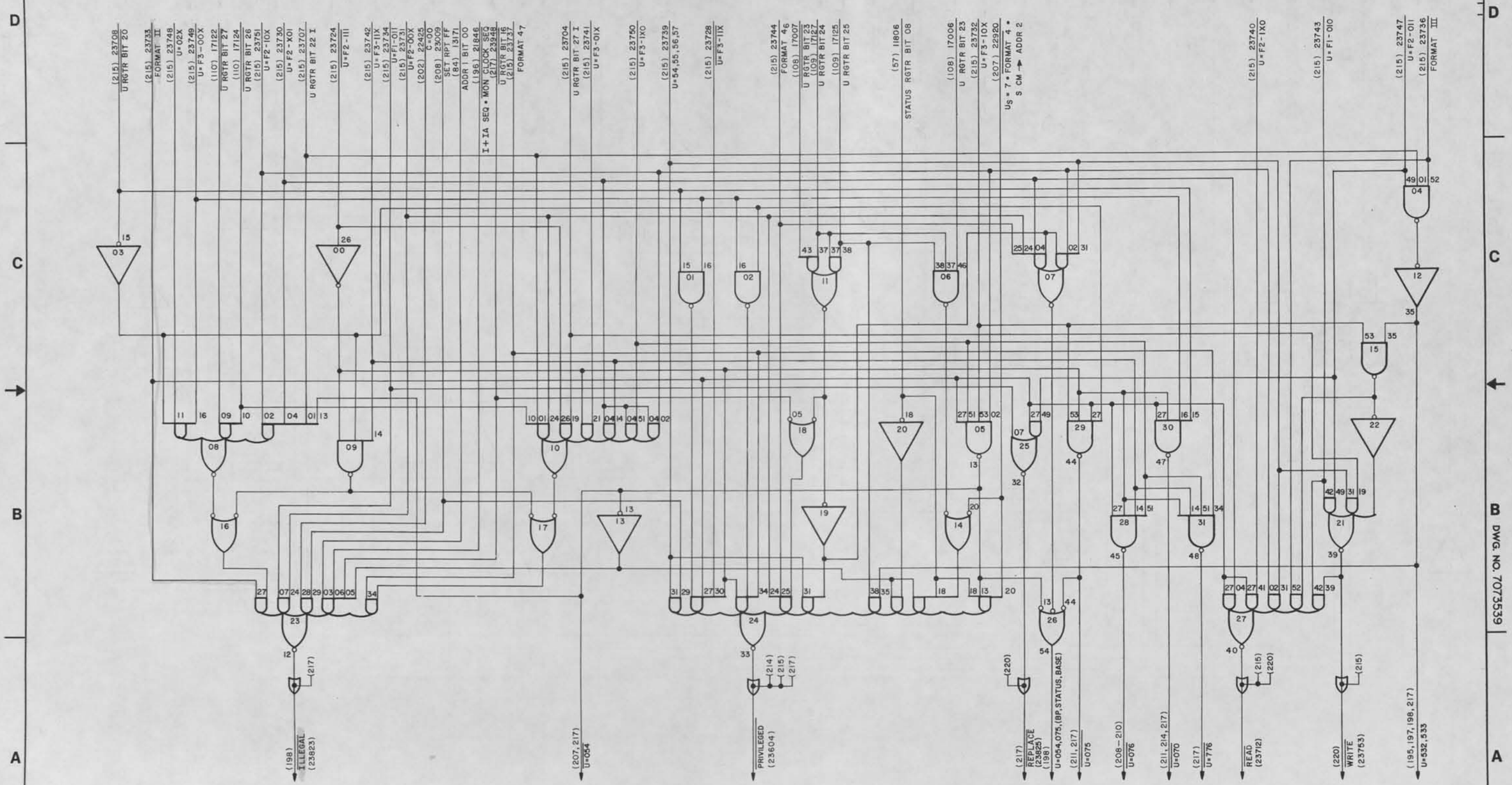

NOTES:

1. CARD TYPE - 2895
2. CARD LOCATION - 02A

U TRANSLATION 2 238

SIZE	CODE IDENT	DWG NO.
D	90536	7073539
SCALE	CLASS A	SHEET 216

DWG. NO. 7073539

UD 1-8534C

REVISIONS						
ZONE	LTR	EIR	DESCRIPTION	CHK	DATE	APPROVED
	CA	D06588	SEE EIR			

REVISIONS						
ZONE	LTR	EIR	DESCRIPTION	CHK	DATE	APPROVED
	AE	D04734	SEE EIR		1-27-72	
	AY	D05804	SEE EIR		2-8-72	
	BC	D05859	SEE EIR		2-11-72	
	BD	D06049	SEE EIR		2-16-72	
	BJ	D06509	SEE EIR		2-14-72	
	BK	D06510	SEE EIR		2-14-72	
	BT	D06552	SEE EIR		2-17-72	

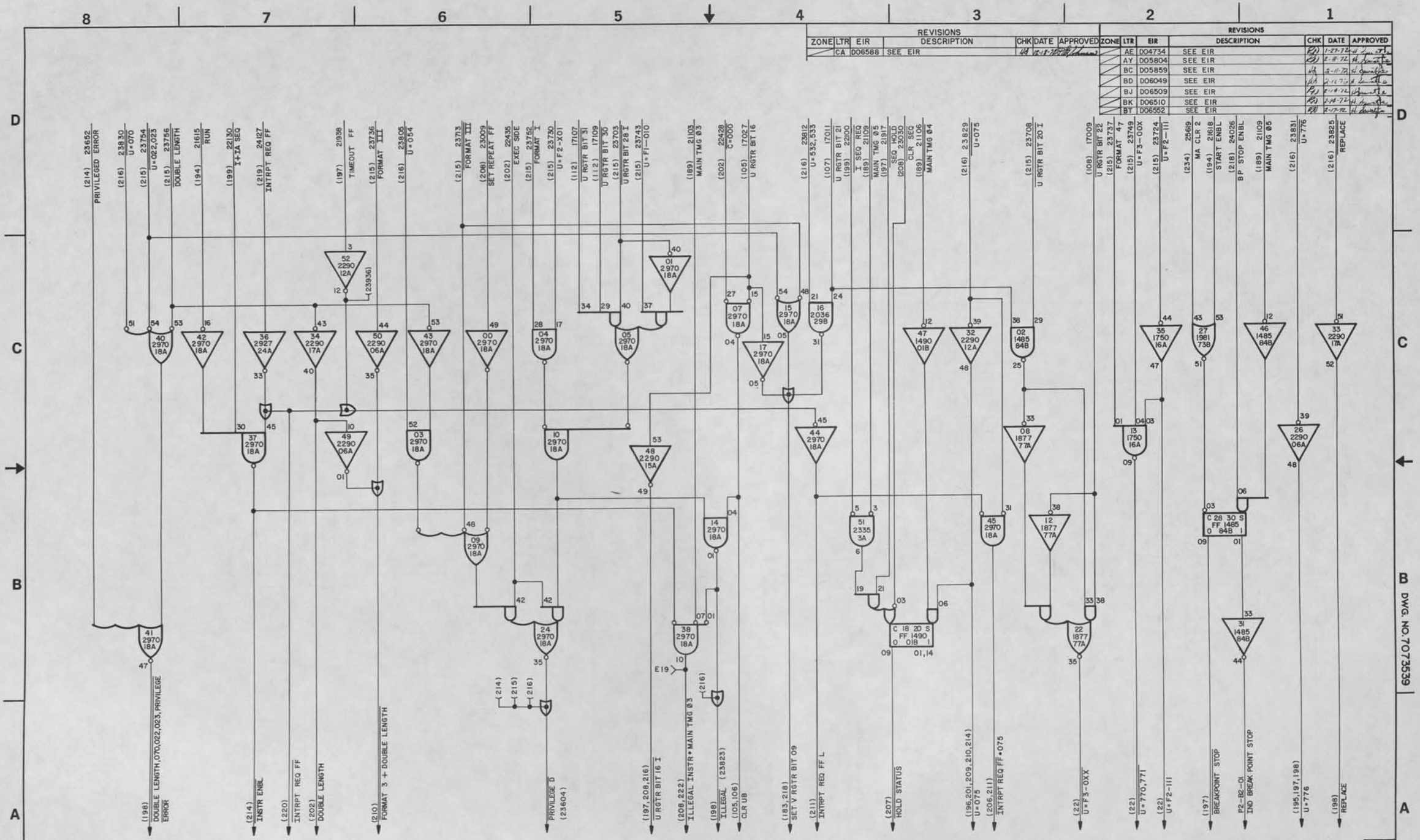

MISCELLANEOUS U TRANSLATION 239

SIZE	CODE IDENT	DWG NO.
D	90536	7073539
SCALE	CLASS A	SHEET 217

DWG. NO. 7073539

CHANGE 2

UD 1-8534C

REVISIONS						
ZONE	LTR	EIR	DESCRIPTION	CHK	DATE	APPROVED
	W	D03391	SEE EIR		6-18-71	
	Y	D03399	SEE EIR			
	CA	D06588	SEE EIR		12-19-72	
	CE	D07197	SEE EIR		2-4-78	

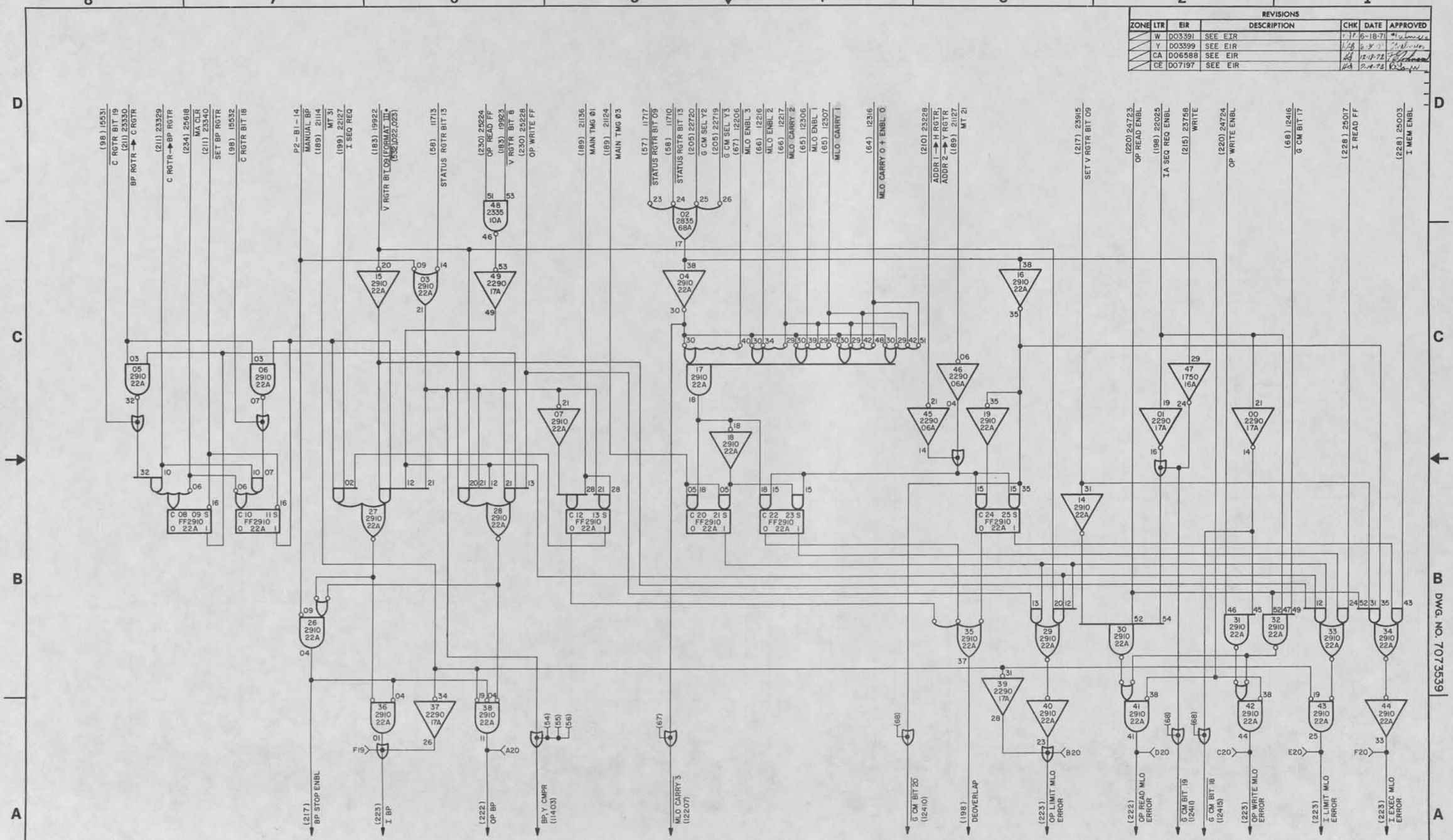

BP & MLO ERRORS 240

SIZE	CODE IDENT	DWG NO.
D	90536	7073539
SCALE	CLASS A	SHEET 218

CHANGE 2

UD 1-8534C

REVISIONS						
ZONE	LTR	EIR	DESCRIPTION	CHK	DATE	APPROVED
	V	D03370	SEE EIR	KAJ	6-17-71	Steelman
	AC	D05087	SEE EIR	KJ	1-21-72	H. Lewis
	AE	D04734	SEE EIR	KJ	1-27-72	H. Lewis
	AT	D05729	SEE EIR	KJ	2-2-72	H. Lewis
	AU	D05750	SEE EIR	KJ	2-9-72	H. Lewis
	BJ	D06509	SEE EIR	KJ	2-18-72	H. Lewis
	CA	D06588	SEE EIR	KJ	12-19-72	[illegible]

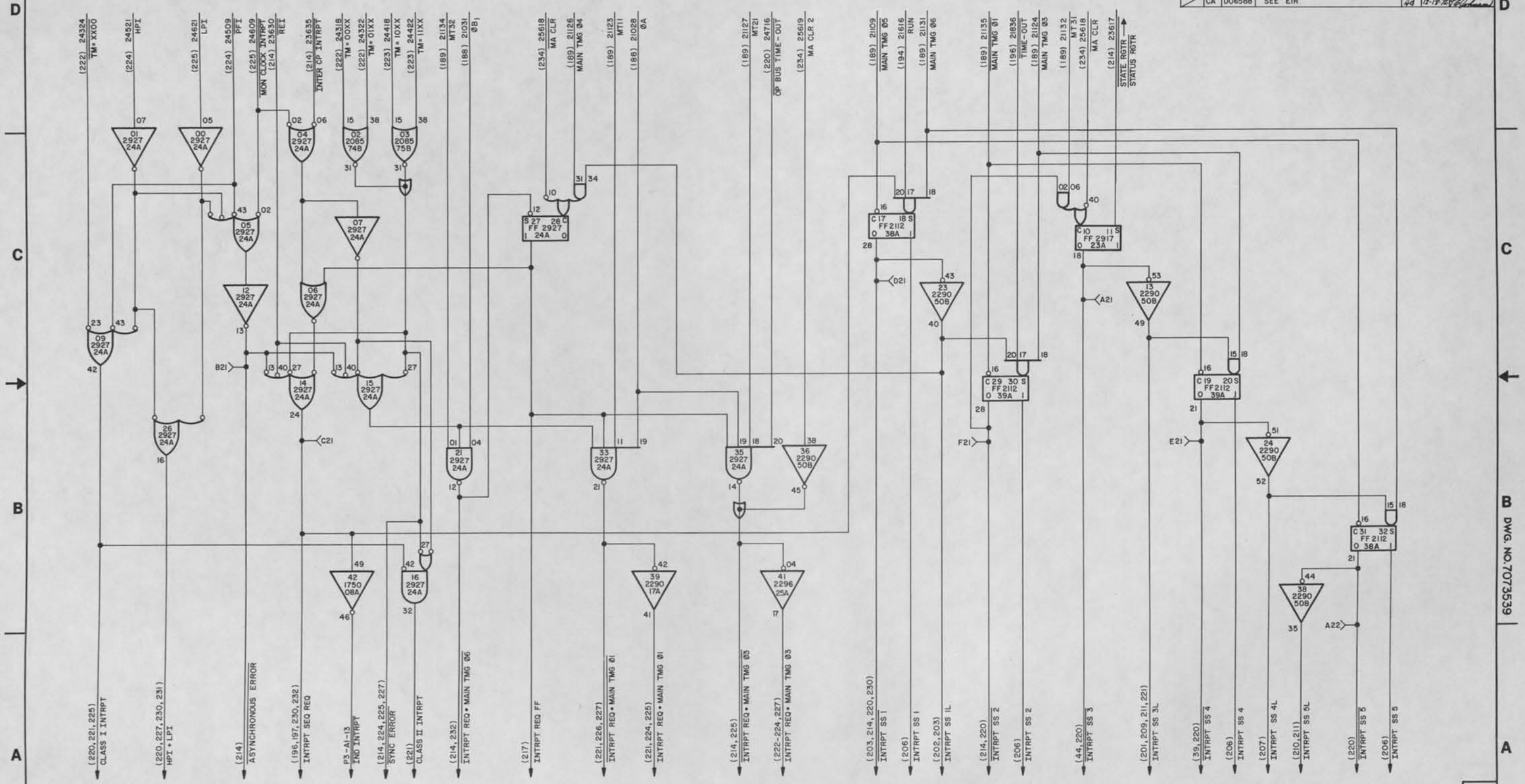

CHANGE 2

INTERRUPT CONTROL I 241

SIZE	CODE IDENT	DWG NO.
D	90536	7073539
SCALE	CLASS A	SHEET 219

UD 1-8534C

REVISIONS						
ZONE	LTR	EIR	DESCRIPTION	CHK	DATE	APPROVED
	AC	D05087	SEE EIR		1-21-72	
	AK	D05145	SEE EIR		2-1-72	
	AZ	D05882	SEE EIR		2-9-72	
	BD	D06049	SEE EIR		2-12-72	
	BM	D06512	SEE EIR		2-15-72	

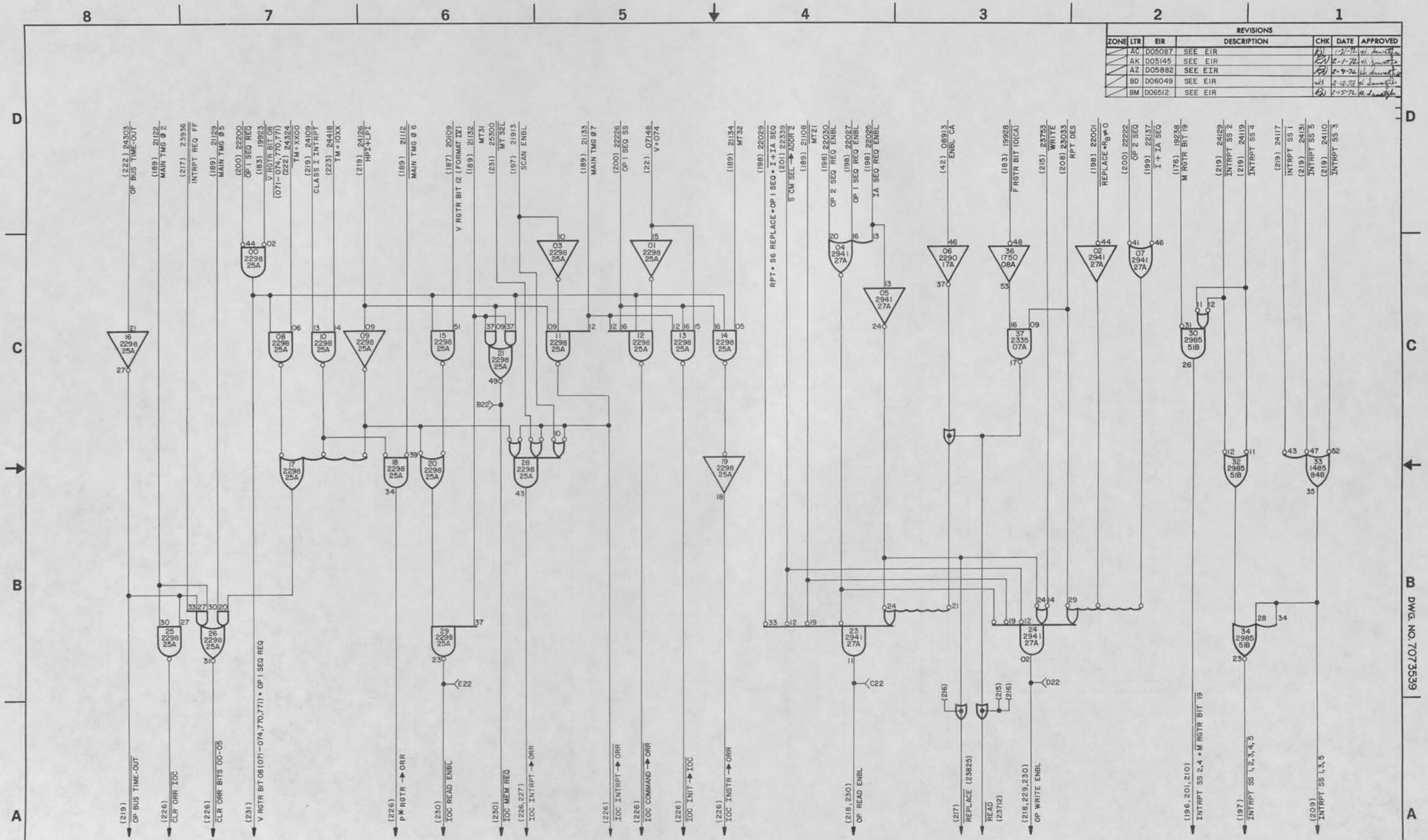

INTERRUPT CONTROL 2 247

SIZE	CODE IDENT	DWG NO.
D	90536	7073539
SCALE	CLASS A	SHEET 220

DWG. NO. 7073539

UD 1-8534C

REVISIONS						
ZONE	LTR	EIR	DESCRIPTION	CHK	DATE	APPROVED
	AE	D04734	SEE EIR	RJ	1-27-72	
	AS	D05195	SEE EIR	RJ	2-3-72	
	BJ	D06509	SEE EIR	RJ	2-10-72	

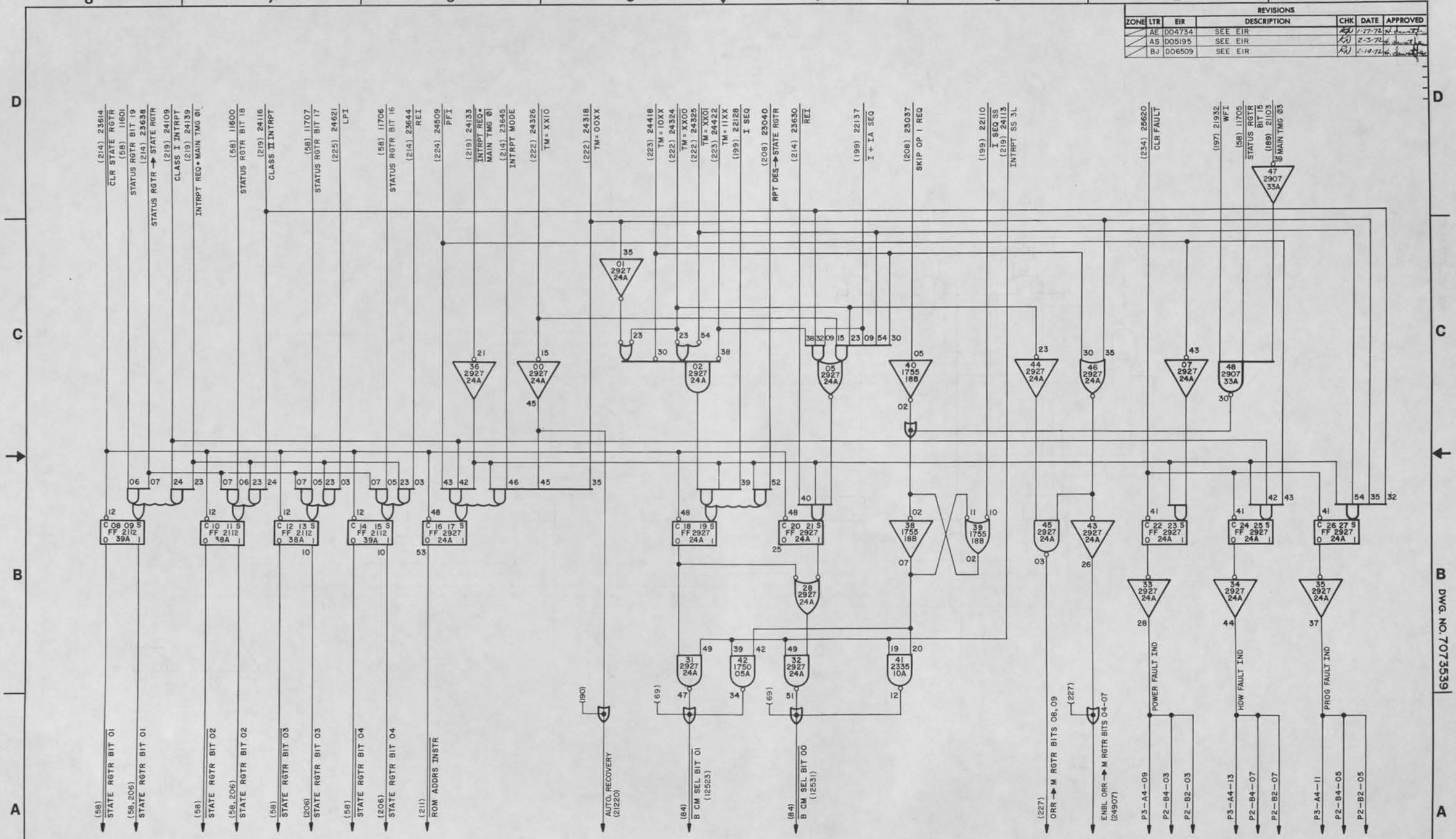

STATE REGISTER 242

SIZE	CODE IDENT	DWG NO.
D	90536	7073539
SCALE	CLASS A	SHEET 221

DWG. NO. 7073539

UD 1-8534C

REVISIONS						
ZONE	LTR	EIR	DESCRIPTION	CHK	DATE	APPROVED
	BC	D05859	SEE EIR		2-11-74	

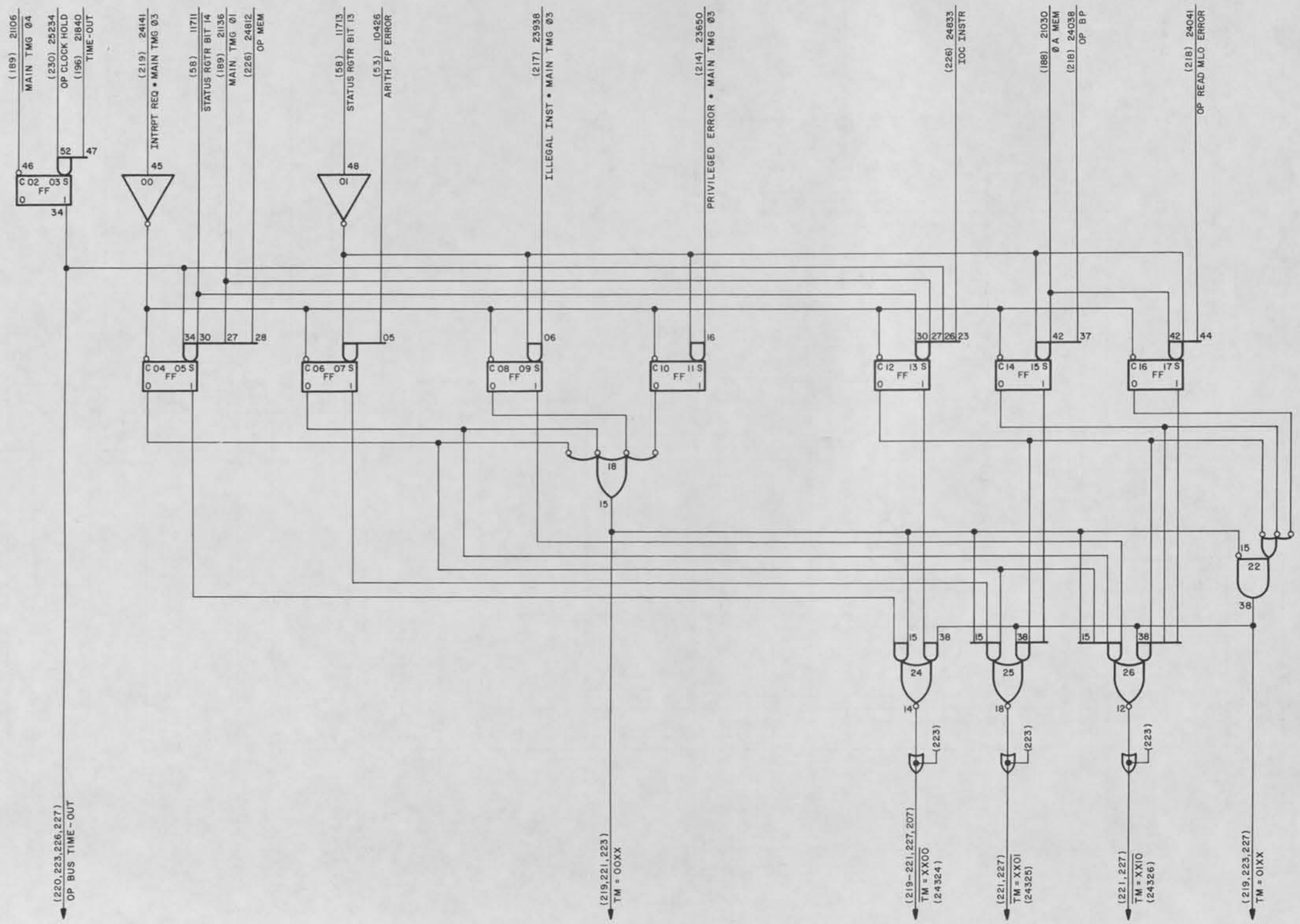

NOTES:
1. CARD TYPE — 2085
2. CARD LOCATION — 74B

SYNCHRONOUS ERRORS I | 243

SIZE	CODE IDENT	DWG NO.
D	90536	7073539
SCALE	CLASS A	SHEET 222

DWG. NO. 7073539

UD 1-8534C

REVISIONS						
ZONE	LTR	EIR	DESCRIPTION	CHK	DATE	APPROVED
	BC	D05859	SEE EIR		7-11-72	

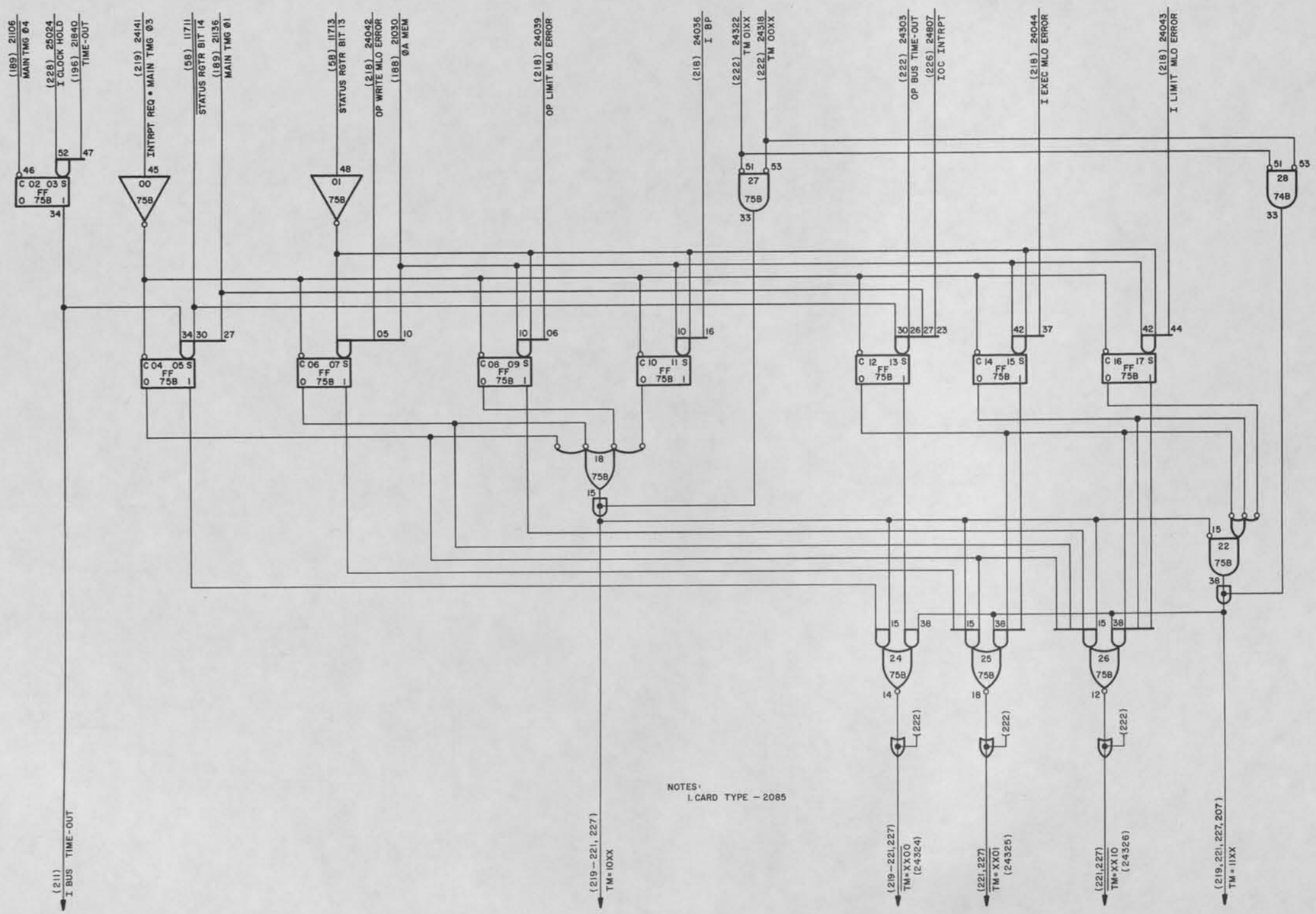

NOTES:
1. CARD TYPE – 2085

SYNCHRONOUS ERRORS 2 | 244

SIZE	CODE IDENT	DWG NO.
D	90536	7073539
SCALE	CLASS A	SHEET 223

DWG. NO. 7073539

UD 1-8534C

REVISIONS						
ZONE	LTR	EIR	DESCRIPTION	CHK	DATE	APPROVED
	U	D03206	SEE EIR		5-6-71	
	Y	D03399	SEE EIR		6 3 7	
	BJ	D06509	SEE EIR		2-14-72	
	CA	D06588	SEE EIR		12-18-72	

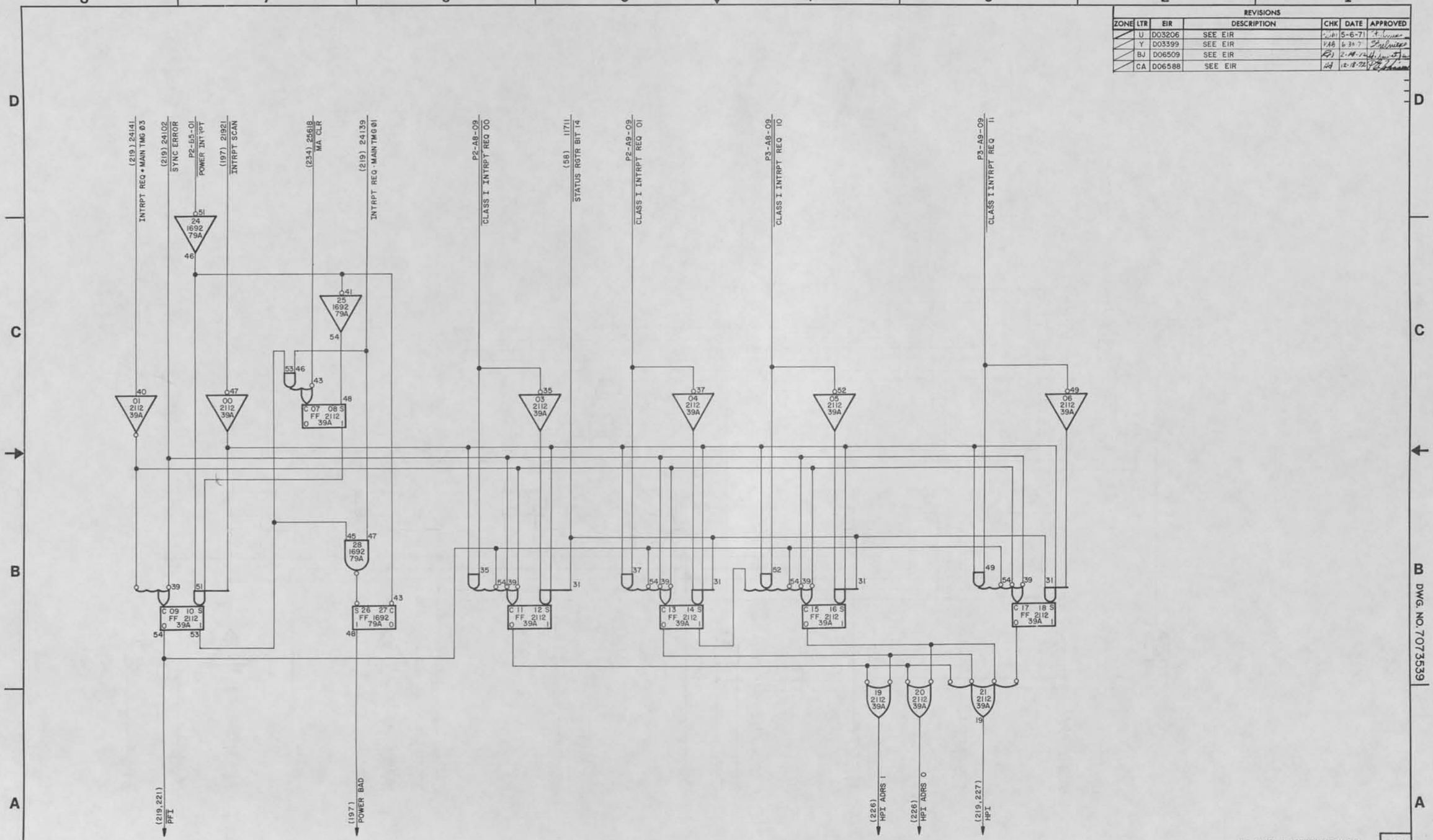

CHANGE 2

CLASS I INTERRUPT 245

SIZE	CODE IDENT	DWG NO.
D	90536	7073539
SCALE	CLASS A	SHEET 224

DWG. NO. 7073539

UD 1-8534C

REVISIONS						
ZONE	LTR	EIR	DESCRIPTION	CHK	DATE	APPROVED
	BJ	D06509	SEE EIR			
	CA	D06588	SEE EIR			

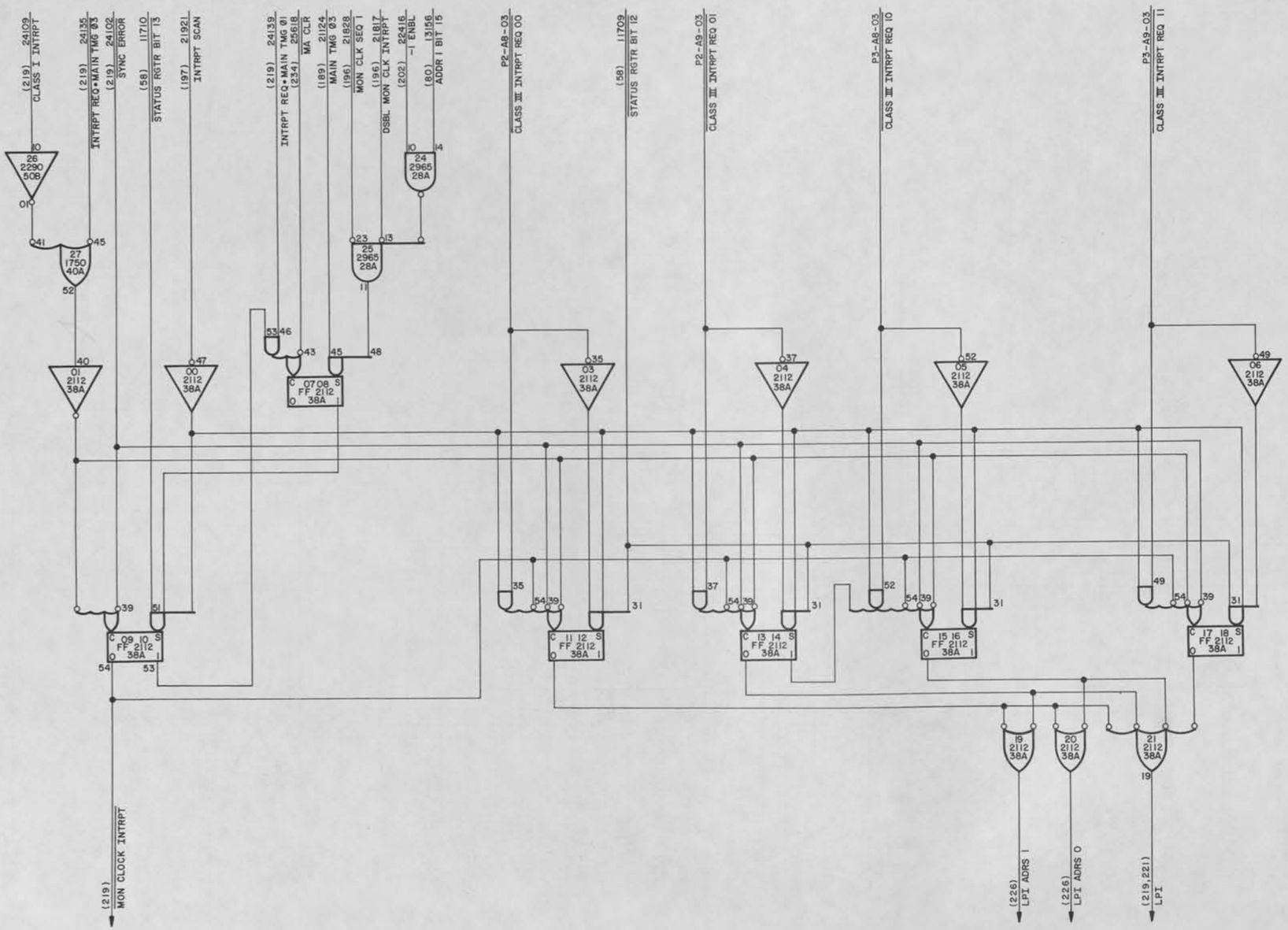

CHANGE 2

CLASS 3 INTERRUPT 246

SIZE	CODE IDENT	DWG NO.
D	90536	7073539
SCALE	CLASS A	SHEET 225

DWG. NO. 7073539

UD 1-8534C

REVISIONS						
ZONE	LTR	EIR	DESCRIPTION	CHK	DATE	APPROVED
	AC	D05087	SEE EIR	RW	1-21-72	H. Sawatzky
	AZ	D05882	SEE EIR	RW	2-9-72	H. Sawatzky
	BJ	D06509	SEE EIR	RW	2-14-72	H. Sawatzky
	BM	D06512	SEE EIR	RW	2-15-72	H. Sawatzky

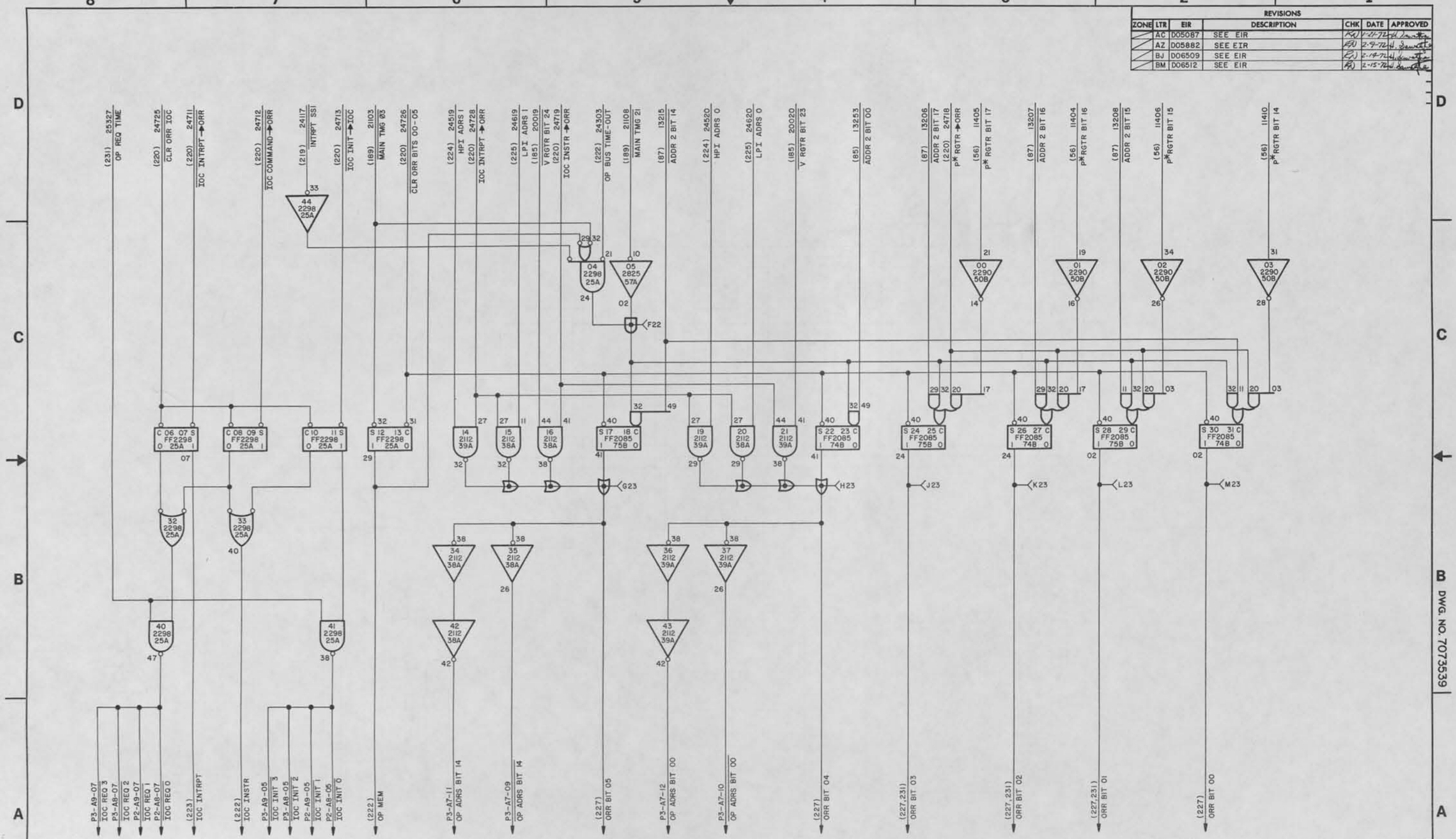

OPERAND REQUEST REGISTER 248

SIZE	CODE IDENT	DWG NO.
D	90536	7073539
SCALE	CLASS A	SHEET 226

UD 1-2534C

REVISIONS						
ZONE	LTR	EIR	DESCRIPTION	CHK	DATE	APPROVED
	AC	D05087	SEE EIR	RJ	1-26-72	[illegible]
	AZ	D05882	SEE EIR	RJ	2-9-72	[illegible]
	BM	D06512	SEE EIR	RJ	2-15-72	[illegible]
	CA	D06588	SEE EIR	RJ	12-18-72	[illegible]

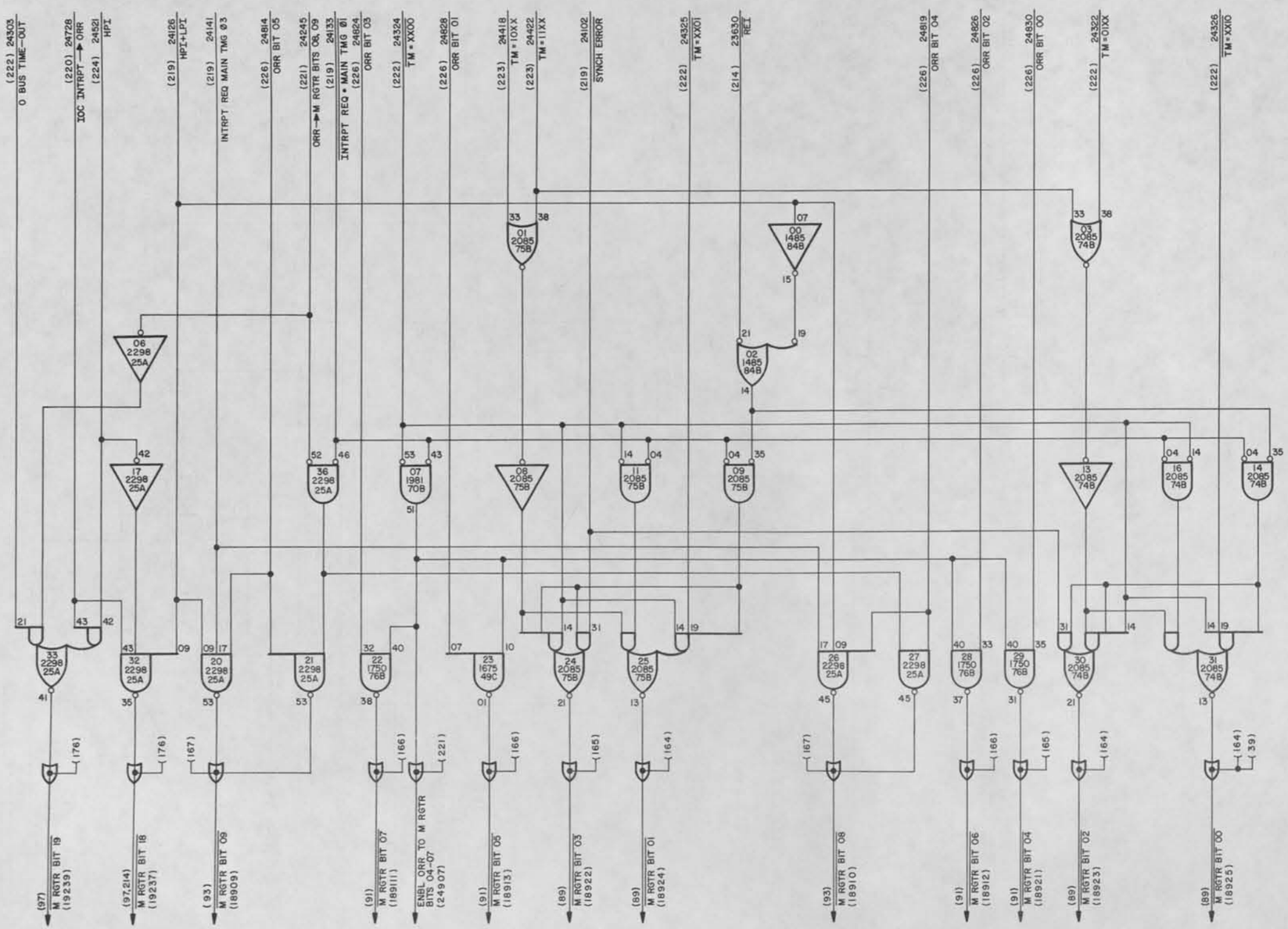

OPERAND REQUEST REGISTER
→ M REGISTER

249

SIZE	CODE IDENT	DWG NO.
D	90536	7073539
SCALE	CLASS A	SHEET 227

DWG. NO. 7073539

CHANGE 2

UD 1-8534C

REVISIONS						
ZONE	LTR	EIR	DESCRIPTION	CHK	DATE	APPROVED
	U	D03206	SEE EIR	[illegible]	5-6-71	[illegible]
	Y	D03399	SEE EIR	[illegible]	6-30-71	[illegible]
	AA	D04553	SEE EIR	[illegible]	7-1-71	[illegible]
	AK	D05145	SEE EIR	[illegible]	2-1-72	[illegible]
	BC	D05859	SEE EIR	[illegible]	2-11-72	[illegible]

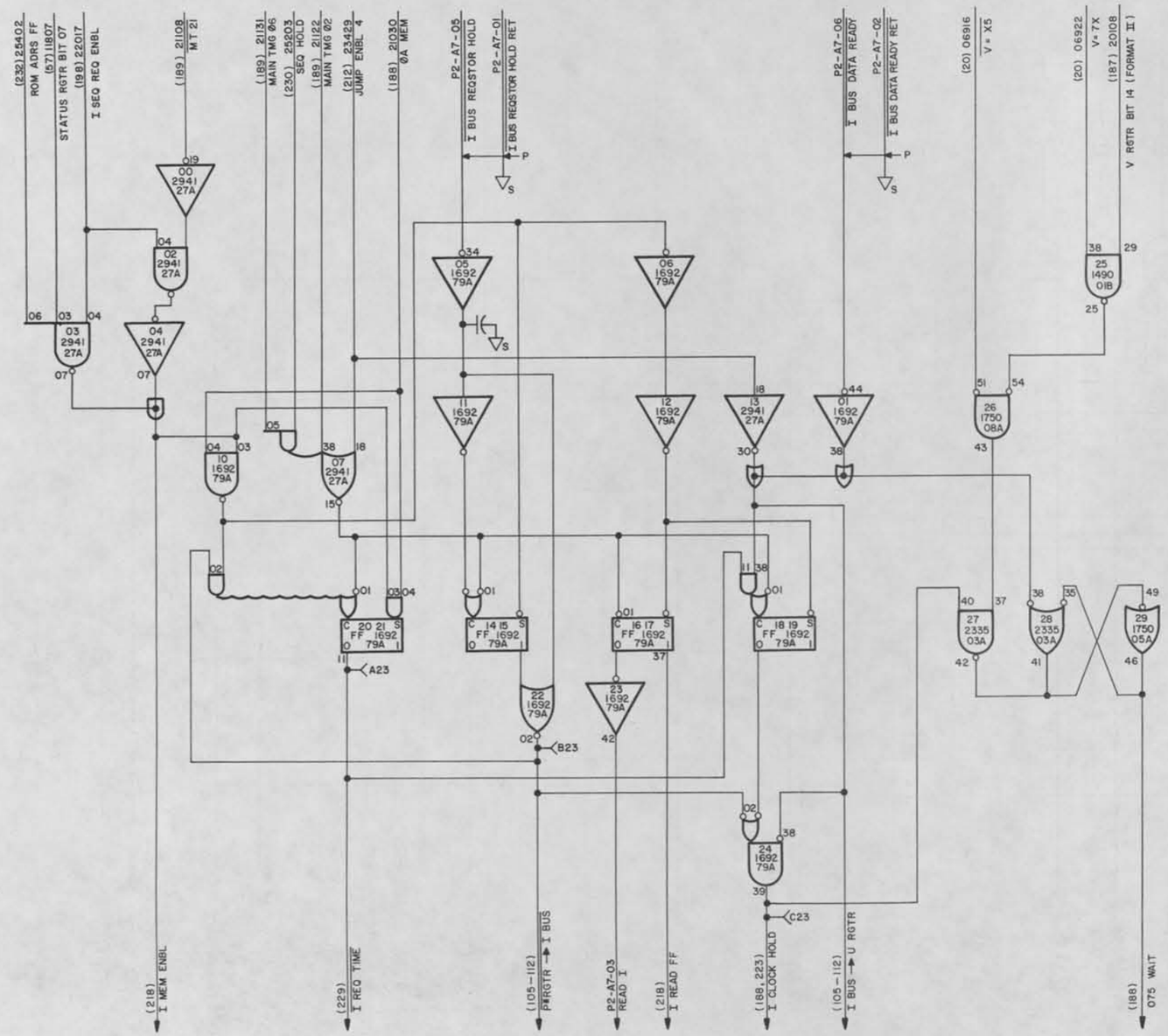

I BUS MEMORY CONTROL 250

SIZE	CODE IDENT	DWG NO.
D	90536	7073539
SCALE	CLASS A	SHEET 228

DWG. NO. 7073539

UD 1-8534C

REVISIONS						
ZONE	LTR	EIR	DESCRIPTION	CHK	DATE	APPROVED
	U	D03206	SEE EIR	[illegible]	5-6-71	[illegible]
	Y	D03399	SEE EIR	KAB	6-30-71	[illegible]

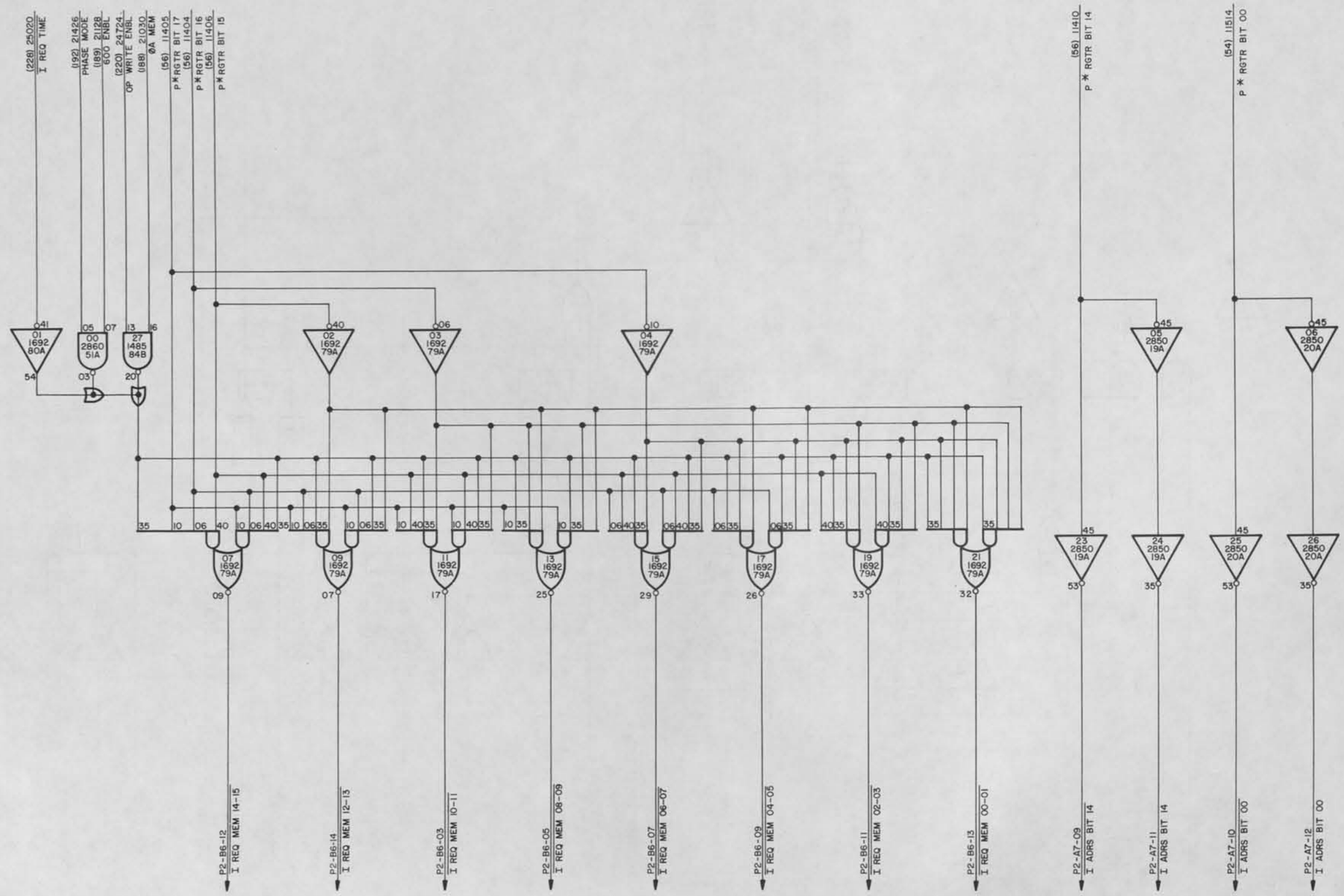

MEMORY REQUEST I BUS 251

SIZE	CODE IDENT	DWG NO.
D	90536	7073539
SCALE	CLASS A	SHEET 229

DWG. NO. 7073539

UD 1-3534C

REVISIONS							
ZONE	LTR	EIR	DESCRIPTION	CHK	DATE	APPROVED	
	U	D03206	SEE EIR	[illegible]	5-5-71	[illegible]	
	Y	D03399	SEE EIR	KAB	6-30-71	[illegible]	
	AA	D04553	SEE EIR	KAB	7-1-71	[illegible]	
	AK	D05145	SEE EIR	[illegible]	2-1-72	[illegible]	
	BB	D05858	SEE EIR	[illegible]	2-11-72	[illegible]	
	BG	D06080	SEE EIR	[illegible]	2-12-72	[illegible]	

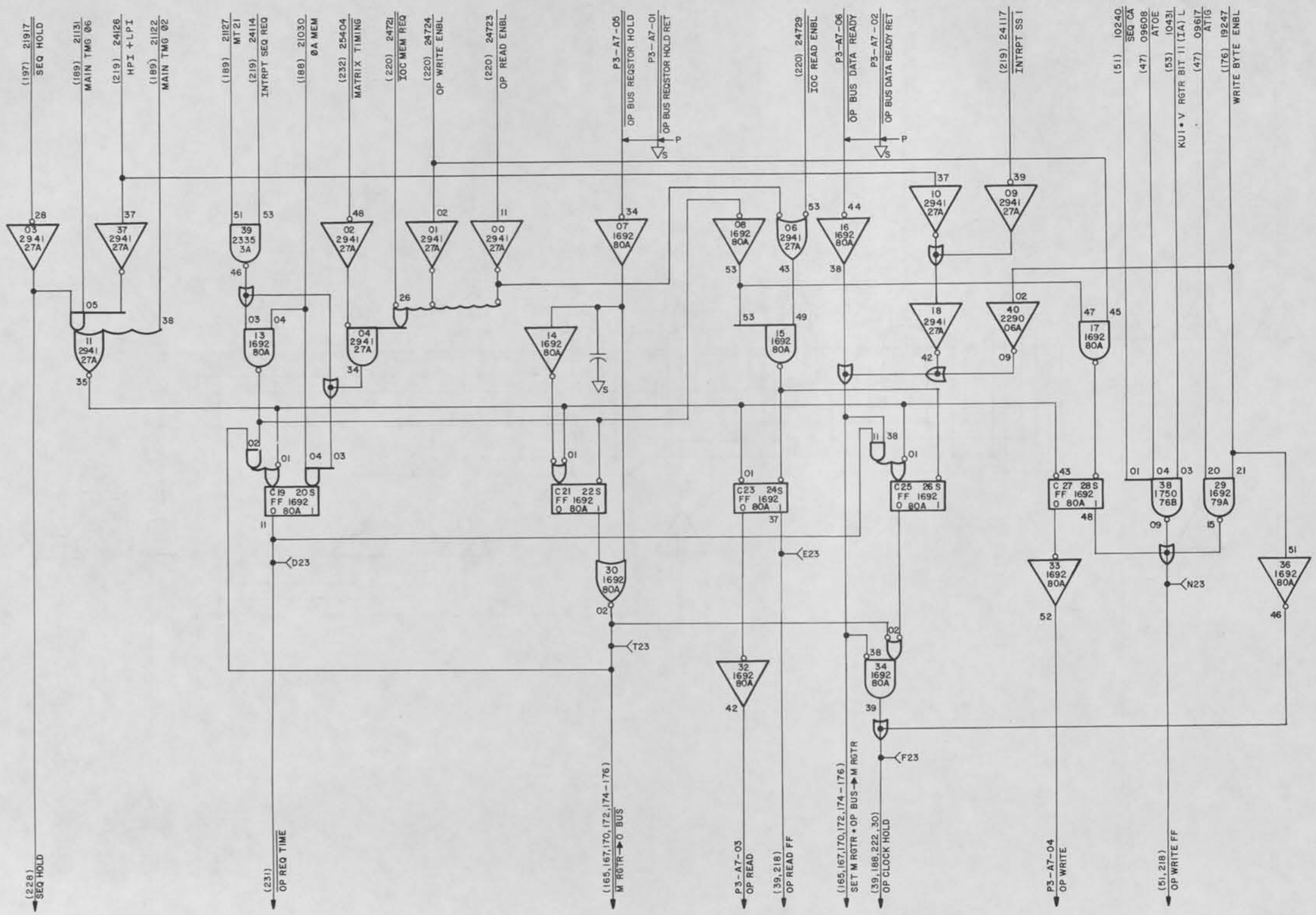

OP BUS MEMORY CONTROL 252

SIZE	CODE IDENT	DWG NO.
D	90536	7073539
SCALE	CLASS A	SHEET 230

DWG. NO. 7073539

UD 1-8534C

REVISIONS						
ZONE	LTR	EIR	DESCRIPTION	CHK	DATE	APPROVED
	U	D03260	SEE EIR		5-5-71	
	Y	D03399	SEE EIR		6-30-71	
	AC	D05087	SEE EIR		1-26-72	
	AZ	D05882	SEE EIR		2-9-72	
	BM	D06512	SEE EIR		2-15-72	

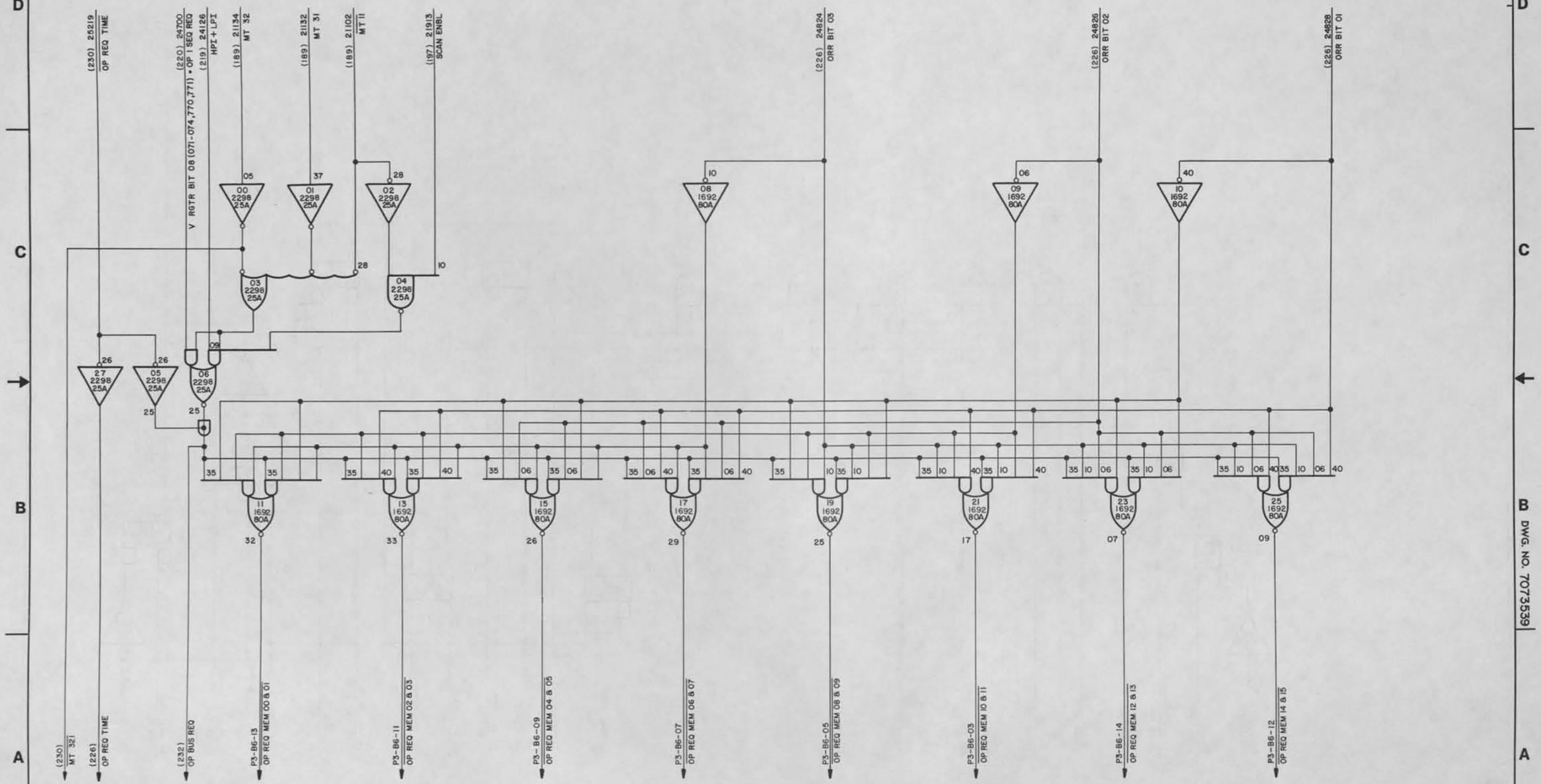

OP MEMORY REQUEST BUS 253

SIZE	CODE IDENT	DWG NO.
D	90536	7073539
SCALE	CLASS A	SHEET 231

DWG. NO. 7073539

UD 1-8534C

REVISIONS						
ZONE	LTR	EIR	DESCRIPTION	CHK	DATE	APPROVED
	CA	D06588	SEE EIR		12-13-72	
	CJ	D10544	SEE EIR		12-12-73	

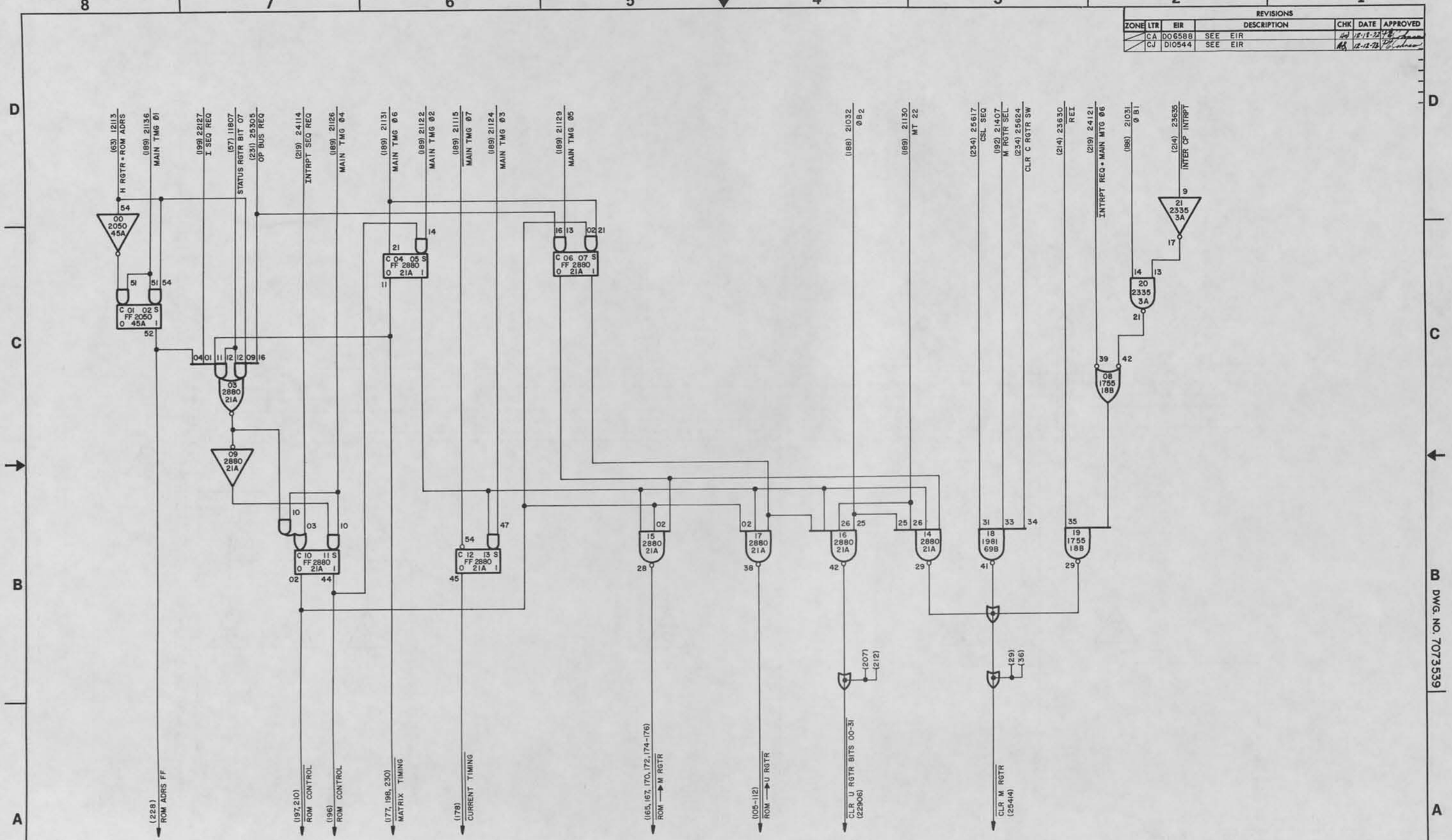

READ ONLY MEMORY CONTROL 254

SIZE	CODE IDENT	DWG NO.
D	90536	7073539
SCALE	CLASS A	SHEET 232

DWG. NO. 7073539

CHANGE 2

UD 1-8534C

REVISIONS						
ZONE	LTR	EIR	DESCRIPTION	CHK	DATE	APPROVED

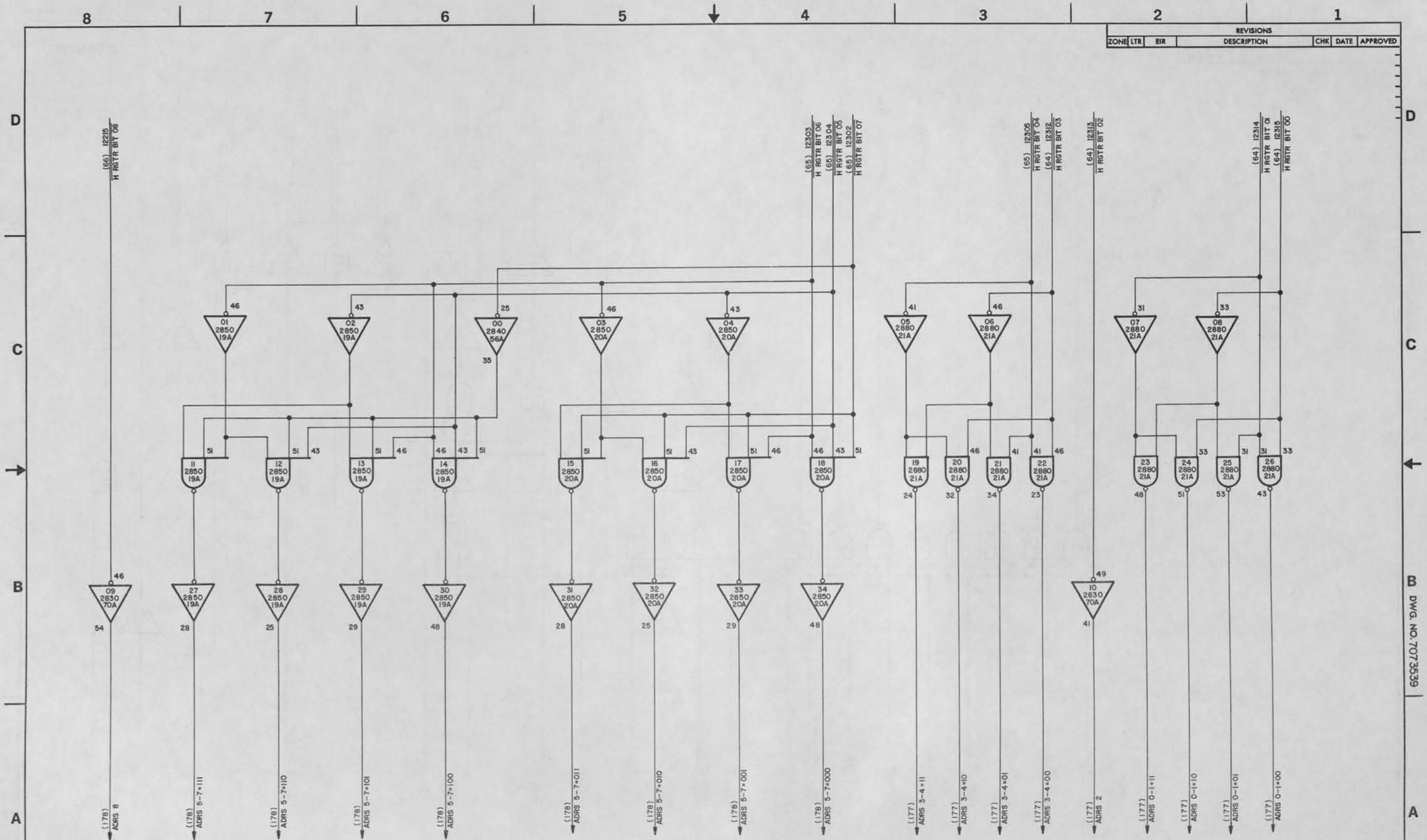

ROM ADDRESS SELECTOR 255

SIZE	CODE IDENT	DWG NO.
D	90536	7073539
SCALE	CLASS A	SHEET 233

DWG. NO. 7073539

UD 1-8534C

REVISIONS						
ZONE	LTR	EIR	DESCRIPTION	CHK	DATE	APPROVED
	V	D03370	SEE EIR		6-17-71	
	AU	D05750	SEE EIR		2-4-72	
	CA	D06588	SEE EIR		12-18-72	

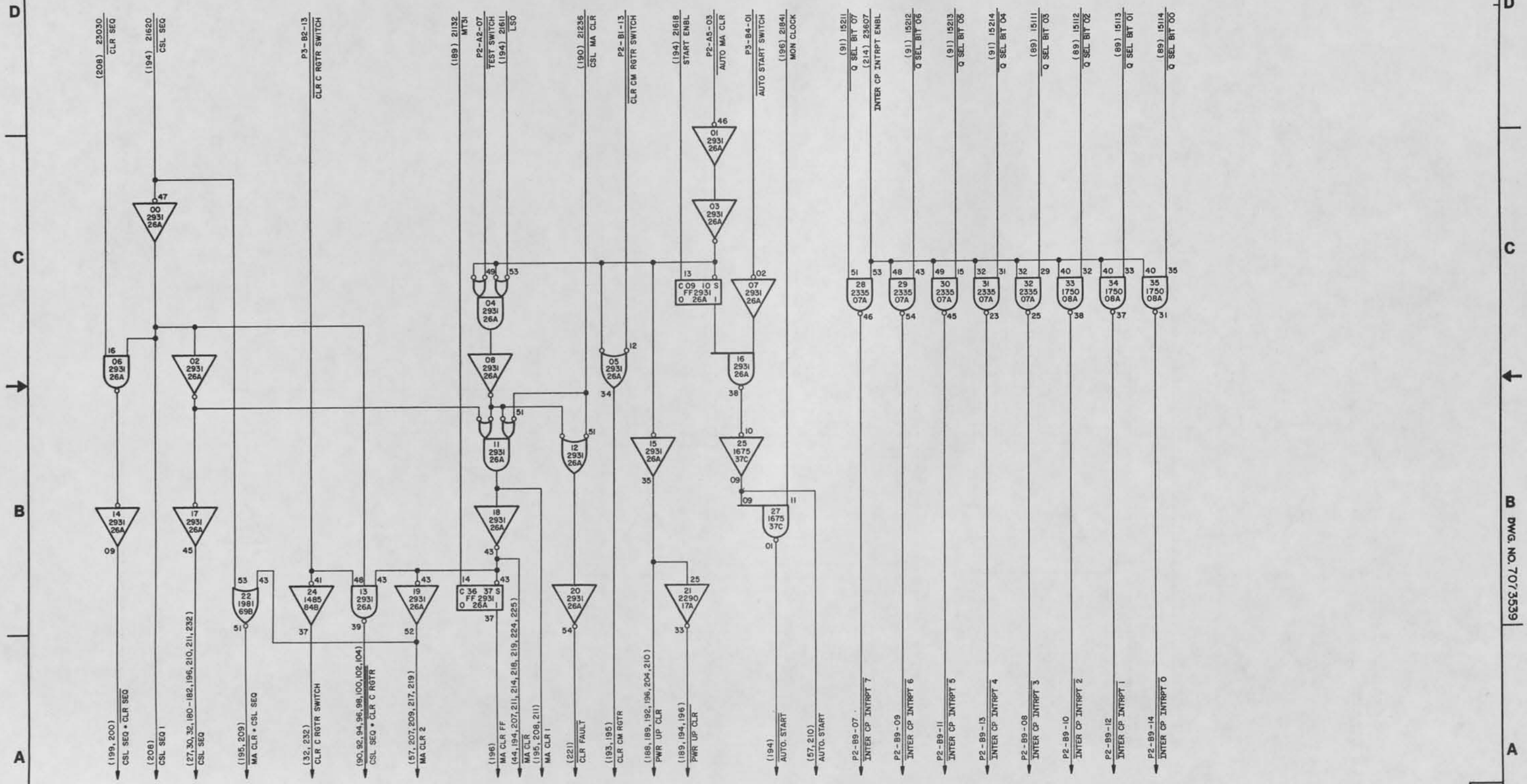

CHANGE 2

MASTER CLEAR 256

SIZE	CODE IDENT	DWG NO.
D	90536	7073539
SCALE	CLASS A	SHEET 234

UD 1-8334C

MEMORY

PART NUMBER	APPLICABLE SHEETS
7071520-00	1 THRU 71

REVISIONS						
ZONE	LTR	EIR	DESCRIPTION	CHK	DATE	APPROVED
	A	D02637	SEE EIR		8/6/70	
	B	D03855	SEE EIR		5-10-71	
	C	D04553	SEE EIR		6-11-71	
	D	D04714	SEE EIR		2-2-72	
	E	D06618	SEE EIR		8-21-72	
	F	D10537	SEE EIR		11-2-73	
	G	D09611	SEE EIR		12-27-73	
	H	D11335	SEE EIR		1-24-74	

SHEET INDEX

SHEET	REV	FIG. NO.	FUNCTIONAL DESCRIPTION
1	H		MEMORY INDEX
2	H		MEMORY CARD PLACEMENT
3	F		MEMORY TIMING BLOCK DIAGRAM
4	-		MEMORY ADDRESSING BLOCK DIAGRAM
5	-		MEMORY DATA & CONTROL
6	-		MEMORY DRIVE (ONE DIMENSION)
7	F		TIMING DIAGRAM LOGIC SIGNALS
8	-		MEMORY TIMING (READ CYCLE)
9	-		MEMORY TIMING (WRITE CYCLE)
10	F		DELAY LINE
11	F		MEMORY TIMING 1
12	-		MEMORY TIMING 2
13	-		S REGISTER BITS 00-05 & 14 ADDRESS TRANSLATION (X AXIS)
14	-		S REGISTER BITS 06-11 ADDRESS TRANSLATION (Y AXIS)
15	-		S REGISTER BITS 12 & 13 ADDRESS TRANSLATION STACK & 1/2 STACK
16	B		X SECONDARY SELECTORS 0-7
17	-		X DRIVE TRANSFORMERS 0-3 & PRIMARY SELECTORS
18	-		X DRIVE TRANSFORMERS 4-7 & PRIMARY SELECTORS
19	-		READ OR WRITE DIODE SELECTORS (X & Y AXIS)
20	-		Y SECONDARY SELECTORS, 0-7
21	-		Y DRIVE TRANSFORMERS 0-3 & PRIMARY SELECTORS
22	-		Y DRIVE TRANSFORMERS 4-7 & PRIMARY SELECTORS

SHEET INDEX

SHEET	REV	FIG. NO.	FUNCTIONAL DESCRIPTION
23	-		DRIVE CURRENT REGULATORS (X & Y AXIS)
24	C		CHANNEL REQUEST REGISTER, CHANNELS 0-3
25	C		CHANNEL REQUEST REGISTER, CHANNELS 4-7
26	-		PRIORITY EVALUATION
27	-		INTERFACE CONTROL 1
28	-		INTERFACE CONTROL 2
29	H		BYTE CONTROL
30	-		Z REGISTER BITS 00 AND 24 AND SELECTOR
31	-		Z REGISTER BITS 01 AND 25 AND SELECTOR
32	-		Z REGISTER BITS 02 AND 26 AND SELECTOR
33	-		Z REGISTER BITS 03 AND 22 AND SELECTOR
34	-		Z REGISTER BITS 04 AND 27 AND SELECTOR
35	-		Z REGISTER BITS 05 AND 28 AND SELECTOR
36	-		Z REGISTER BITS 06 AND 29 AND SELECTOR
37	-		Z REGISTER BITS 07 AND 30 AND SELECTOR
38	-		Z REGISTER BITS 08 AND 31 AND SELECTOR
39	-		Z REGISTER BITS 09 AND 21 AND SELECTOR
40	-		Z REGISTER BITS 10 AND 20 AND SELECTOR
41	-		Z REGISTER BITS 11 AND 19 AND SELECTOR
42	-		Z REGISTER BITS 12 AND 18 AND SELECTOR
43	-		Z REGISTER BITS 13 AND 17 AND SELECTOR
44	-		Z REGISTER BITS 14 AND 23 AND SELECTOR
45	-		Z REGISTER BITS 15 AND 16 AND SELECTOR

SHEET INDEX

SHEET	REV	FIG. NO.	FUNCTIONAL DESCRIPTION
46	-		INHIBIT CURRENT REGULATORS, BITS 00-10
47	-		INHIBIT CURRENT REGULATORS, BITS 11-21
48	-		INHIBIT CURRENT REGULATORS, BITS 22-31
49	-		INHIBIT HALF STACK SELECTORS, STACK 0
50	-		SENSE AND INHIBIT LINES, STACK 0
51	B		SENSE AMPLIFIERS, STACK 0, BITS 00-31
52	-		INHIBIT HALF STACK SELECTORS, STACK 1
53	-		SENSE AND INHIBIT LINES, STACK 1
54	B		SENSE AMPLIFIERS, STACK 1, BITS 00-31
55	-		INHIBIT HALF STACK SELECTORS, STACK 2
56	-		SENSE AND INHIBIT LINES, STACK 2
57	B		SENSE AMPLIFIERS, STACK 2, BITS 00-31
58	-		INHIBIT HALF STACK SELECTORS, STACK 3
59	-		SENSE AND INHIBIT LINES, STACK 3
60	B		SENSE AMPLIFIERS, STACK 3, BITS 00-31
61	-		STACK CONNECTOR (SIGNALS)
62	-		MEMORY STACK DRIVE LINES(X AXIS)(STACK 0)
63	-		MEMORY STACK DRIVE LINES(X AXIS)(STACK 1)
64	-		MEMORY STACK DRIVE LINES(X AXIS)(STACK 2)
65	-		MEMORY STACK DRIVE LINES(X AXIS)(STACK 3)
66	-		MEMORY STACK DRIVE LINES(Y AXIS)(STACK 0)
67	-		MEMORY STACK DRIVE LINES(Y AXIS)(STACK 1)
68	-		MEMORY STACK DRIVE LINES(Y AXIS)(STACK 2)
69	-		MEMORY STACK DRIVE LINES(Y AXIS)(STACK 3)
70	G		REAR CONNECTOR PLATE
71	-		TEST POINT BLOCK (MEMORY CHASSIS)

PART NO.

~~FOR MATL REQUIREMENTS SEE PL~~

NEXT ASSY	USED ON
APPLICATION	

UNLESS OTHERWISE SPECIFIED
DIMENSIONS IN INCHES TOL ON

2 PLACE DECIMALS	3 PLACE DECIMALS	ANGLES
±	±	±

HOLE DIA TOL

0 THRU .250	.251 THRU .500	.501 AND LARGER
+ .003 − .002	+ .005 − .003	+ .010 − .005

THREADS: EXT CL 2A, INT CL 2B

CONTRACT NO.

LAYOUT		
DRAWN R. MILLER		5/20/70
CHECKED		11/10
ENGR		8-5-70
ENGR		
APPROVED		

UNIVAC | FEDERAL SYSTEMS DIVISION
UNIVAC PARK, P.O. BOX 3525, ST. PAUL, MINN. 55101

TITLE
FUNCTIONAL SCHEMATIC, MEMORY CHASSIS ASSEMBLY

SIZE	CODE IDENT	DWG NO.
D	90536	7072000

SCALE | CLASS A | SHEET | OF 7

A B C D E F G H

SPERRY RAND

DWG. NO. 7072000

CHANGE 2

UD1-2534

REVISIONS						
ZONE	LTR	EIR	DESCRIPTION	CHK	DATE	APPROVED
	D	D04714	SEE EIR	RD	2-2-72	H. Dunwoody
	E	D06618	SEE EIR	HR	2-21-72	H. Dunwoody
	F	D10537	SEE EIR	RB	11-2-73	F. G. Cardwell
	H	D11335	SEE EIR	JH	1-24-74	H. Dunwoody

76

STACK 2
7071530
(23,56,64,68)
A2

STACK 0
7071530
(23,50,62,66)
A4

POWER CONVERTER
7217074—TYPE B
(29)
A5

STACK 3
7071530
(23,59,65,69)
A1

STACK 1
7071530
(23,53,63,67)
A3

Slot	Stack 2	Stack 0	Power Converter	Stack 3	Stack 1
01	1435 (57)			1435 (60)	
02	1435 (57)			1435 (60)	
03	1435 (57)			1435 (60)	
04					
05					
06					
07					
08					
09					
10					
11					
12					
13					
14					
15					
16					
17					
18					
19					
20					
21					
22					
23					
24					
25					
26					
27					
28	1620 (55)			1620 (58)	
29					
30	1620 (55)			1620 (58)	
31					
32					
33					
34	1435 (51)			1435 (54)	
35	1435 (51)			1435 (54)	
36	1435 (51)			1435 (54)	
37					
38					
39					
40					
41					
42					
43					
44					
45					
46					
47					
48					
49					
50					
51					
52					
53					
54					
55					
56					
57					
58					
59					
60					
61					
62	1620 (49)			1620 (52)	
63	1620 (49)			1620 (52)	
64					
65					
66					
67	SPARE			SPARE	
68	SPARE			1665 (10,11,15,26,27,29)	
69	SPARE			2995 (10)	
70	SPARE				
71	SPARE			1470 (12,15,26)	
72	1465 (11,12,15,24,27,28)			1465 (11,12,15,25,27,28)	
73	1465 (11,12,15,24,27,28,29)			1465 (11,12,15,25,27,28)	
74	1465 (11,15,24,27,28,29)			1465 (11,12,15,25,27,28)	
75	1460 (11,13,44)			1465 (11,12,15,25,27,28,29)	
76	1460 (13,30)			1465 (11,15,24,27,28,29)	
77	1460 (13,31)			1460 (11,13,45)	
78	1460 (11,13,27,32)			1460 (11,15,15,43)	
79	1460 (13,34)			1460 (13,15,26,42)	
80	1460 (13,14,35)			1460 (14,41)	
81	1460 (11,14,36)			1460 (14,40)	
82	1460 (11,14,37)			1460 (11,14,39)	
83	1460 (11,14,26,38)			1460 (11,13,14,33)	
84	1485 (14,15,26,29)			SPARE	

Slot	Stack 2	Stack 0	Power Converter	Stack 3	Stack 1
01	1490 (29)			1435 (60)	
02	1420 (22)			1435 (60)	
03	1420 (21)			1435 (60)	
04					
05					
06	1405 (20)				
07	1405 (20)				
08	1440 (23)				
09					
10	1400 (19)				
11					
12	1400 (19)				
13					
14					
15	1440 (23)				
16	1405 (16)				
17	1405 (16)				
18	1420 (18)				
19					
20	1420 (17)				
21					
22	1615 (14,48)				
23					
24	1615 (48)				
25					
26	1615 (48)				
27					
28	1615 (47,48)			1620 (58)	
29					
30	1615 (47)			1620 (58)	
31					
32					
33					
34	1615 (47)			1435 (54)	
35				1435 (54)	
36	1615 (47)			1435 (54)	
37					
38	1615 (46,47)				
39					
40	1615 (11,46)				
41					
42	1615 (11,46)				
43					
44	1615 (10,46)				
45					
46					
47					
48					
49					
50					
51					
52					
53					
54					
55					
56					
57					
58					
59					
60					
61					
62				1620 (52)	
63				1620 (52)	
64					
65					
66					
67				SPARE	
68				1665 (10,11,15,26,27,29)	
69				2995 (10)	
70					
71				1470 (12,15,26)	
72				1465 (11,12,15,25,27,28)	
73				1465 (11,12,15,25,27,28)	
74				1465 (11,12,15,25,27,28)	
75				1465 (11,12,15,25,27,28,29)	
76				1465 (11,15,24,27,28,29)	
77				1460 (11,13,45)	
78				1460 (11,15,15,43)	
79				1460 (13,15,26,42)	
80				1460 (14,41)	
81				1460 (14,40)	
82				1460 (11,14,39)	
83				1460 (11,13,14,33)	
84				SPARE	

NOTE:
1. UNLESS OTHERWISE SPECIFIED, PREFIX ALL MEMORY MODULE PART NUMBERS WITH 711-----.
2. FOR PRINTED CIRCUIT INTERCHANGEABILITY DATA REFER TO DRAWING 7073474.

DWG. NO. 7072000

MEMORY CARD PLACEMENT

SIZE	CODE IDENT	DWG NO.
D	90536	7072000
SCALE	CLASS A	SHEET 2

CHANGE 2

UD 1-8534C

REVISIONS						
ZONE	LTR	EIR	DESCRIPTION	CHK	DATE	APPROVED
	B	D03855	SEE EIR		5-10-71	
	F	D10537	SEE EIR		11-2-73	

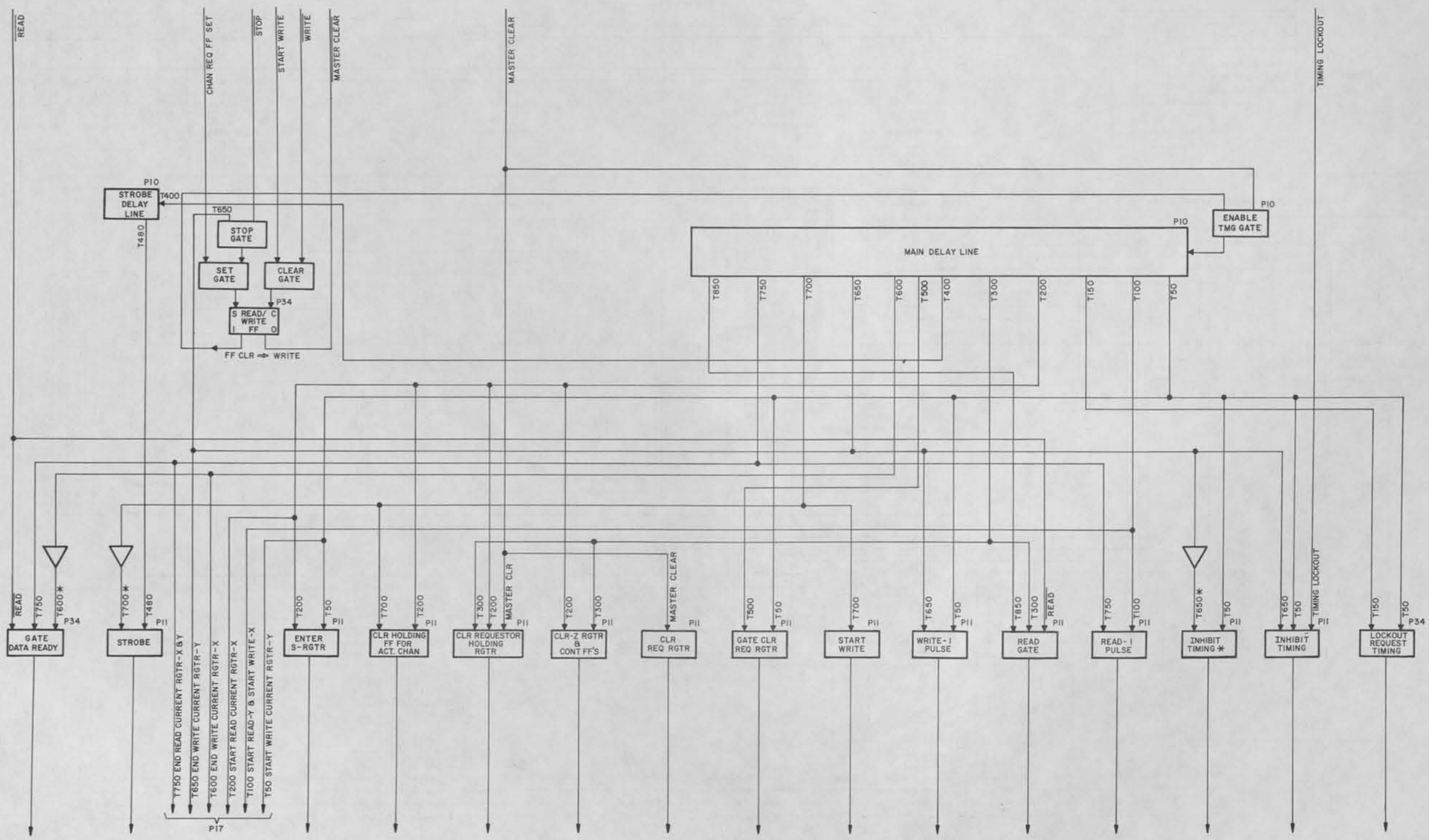

DWG. NO. 7072000

MEMORY TIMING BLOCK DIAGRAM

SIZE	CODE IDENT	DWG NO.
D	90536	7072000
SCALE	CLASS A	SHEET 3

CHANGE 2

UD 1-3534C

REVISIONS						
ZONE	LTR	EIR	DESCRIPTION	CHK	DATE	APPROVED

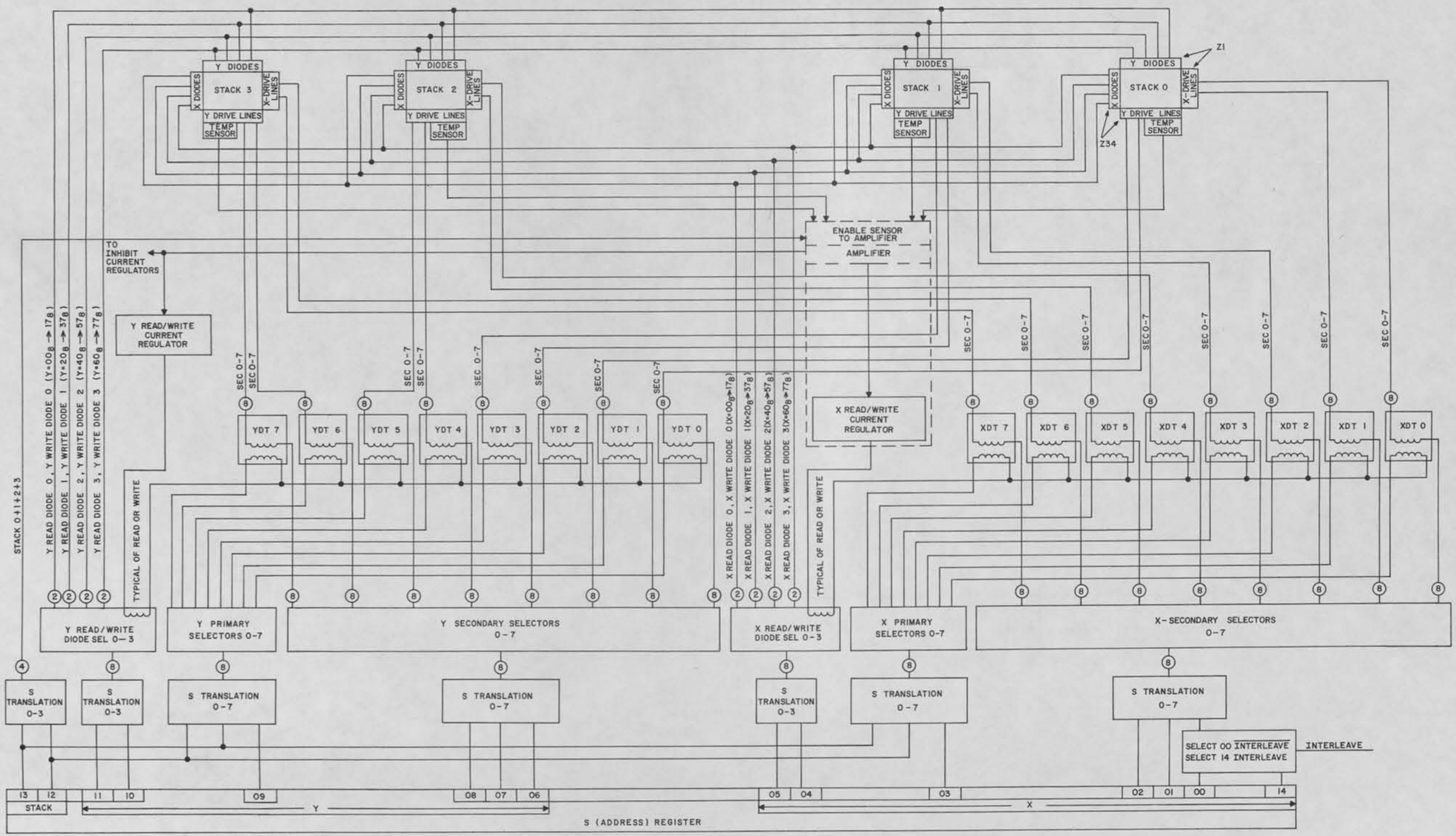

MEMORY ADDRESSING BLOCK DIAGRAM

SIZE	CODE IDENT	DWG NO.
D	90536	7072000
SCALE	CLASS A	SHEET 4

DWG. NO. 7072000

UD 1-8534C

ZONE	LTR	EIR	REVISIONS DESCRIPTION	CHK	DATE	APPROVED

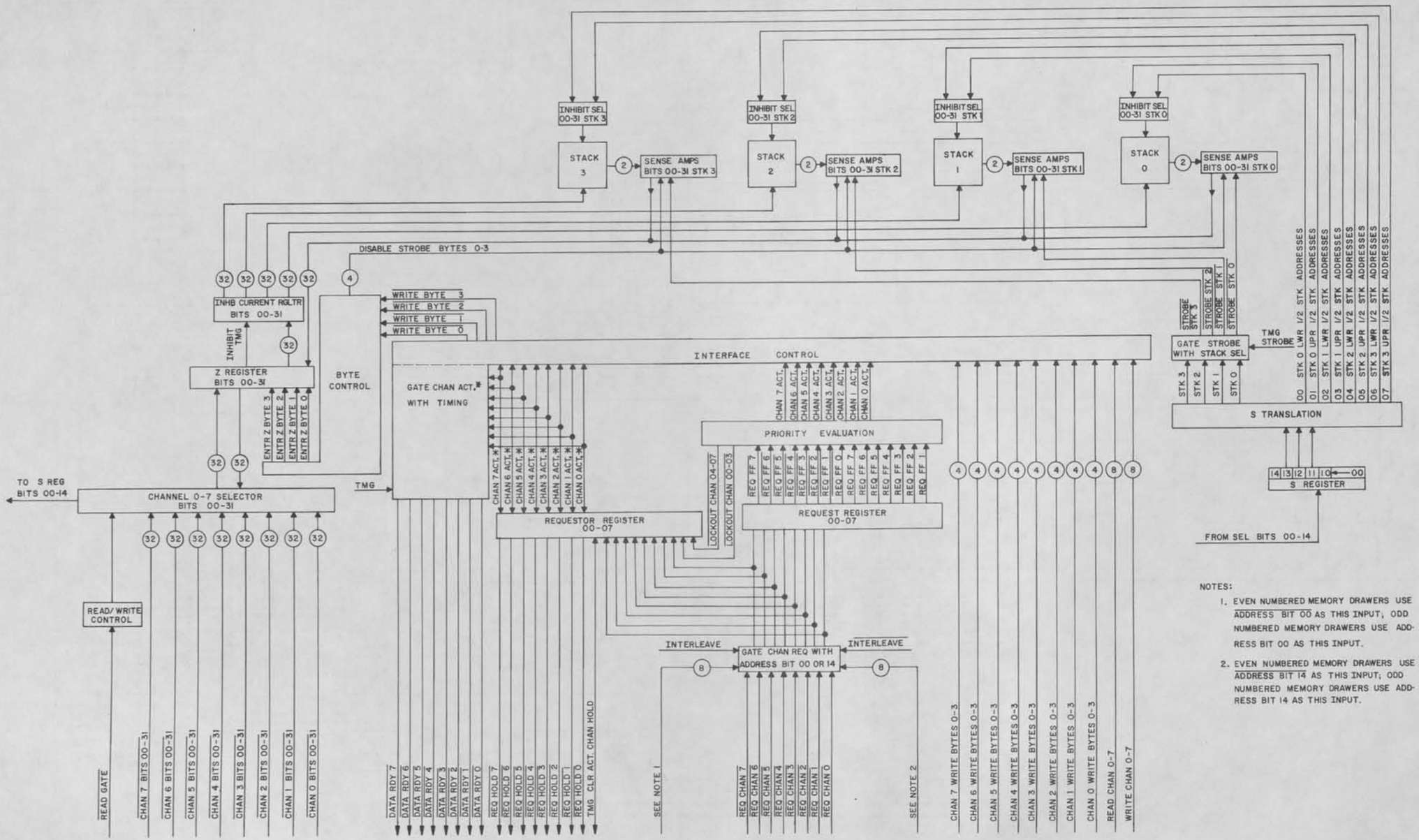

NOTES:

1. EVEN NUMBERED MEMORY DRAWERS USE ADDRESS BIT 00 AS THIS INPUT; ODD NUMBERED MEMORY DRAWERS USE ADDRESS BIT 00 AS THIS INPUT.
2. EVEN NUMBERED MEMORY DRAWERS USE ADDRESS BIT 14 AS THIS INPUT; ODD NUMBERED MEMORY DRAWERS USE ADDRESS BIT 14 AS THIS INPUT.

DWG. NO. 7072000

MEMORY DATA & CONTROL

SIZE	CODE IDENT	DWG NO.
D	90536	7072000
SCALE	CLASS A	SHEET 5

UD 1-2534C

REVISIONS						
ZONE	LTR	EIR	DESCRIPTION	CHK	DATE	APPROVED

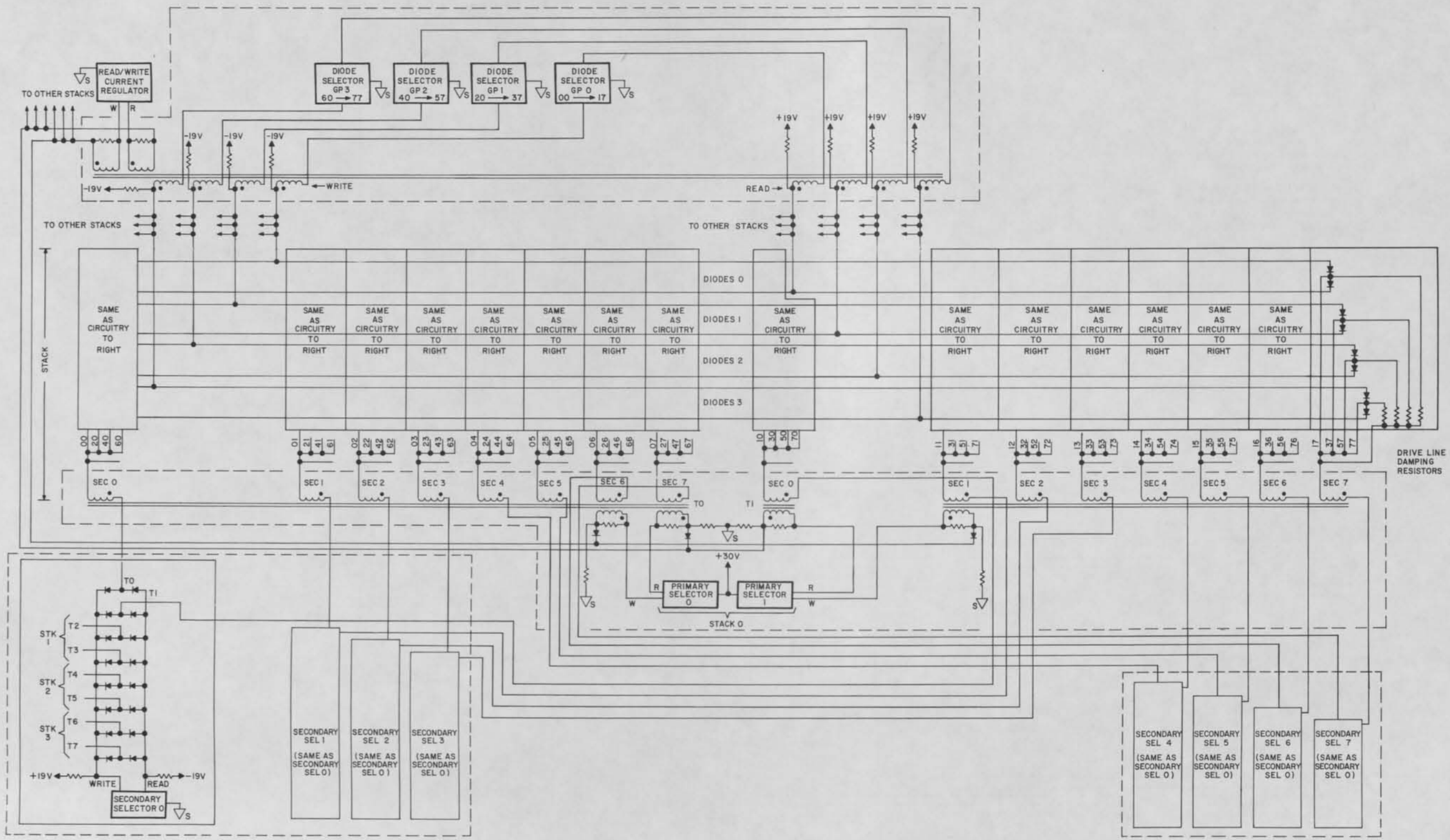

MEMORY DRIVE (ONE DIMENSION)

SIZE	CODE IDENT	DWG NO.
D	90536	7072000
SCALE	CLASS A	SHEET 6

DWG. NO. 7072000

UD 1-8534C

REVISIONS						
ZONE	LTR	EIR	DESCRIPTION	CHK	DATE	APPROVED
	F	D10537	SEE EIR		11-2-73	

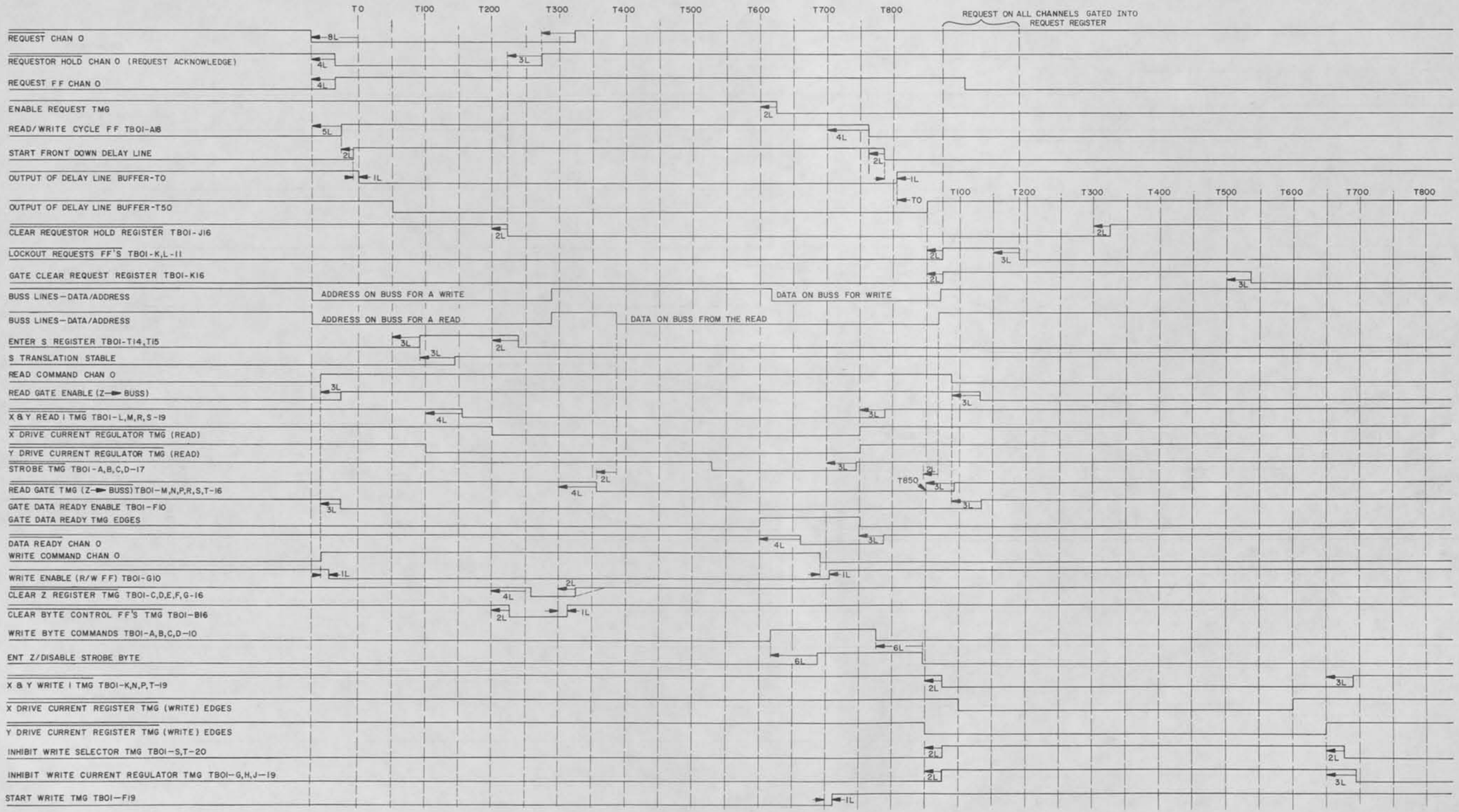

CHANGE 2

TIMING DIAGRAM LOGIC SIGNALS

SIZE	CODE IDENT	DWG NO.
D	90536	7072000
SCALE	CLASS A	SHEET 7

DWG. NO. 7072000

UD 1-8534C

REVISIONS						
ZONE	LTR	EIR	DESCRIPTION	CHK	DATE	APPROVED

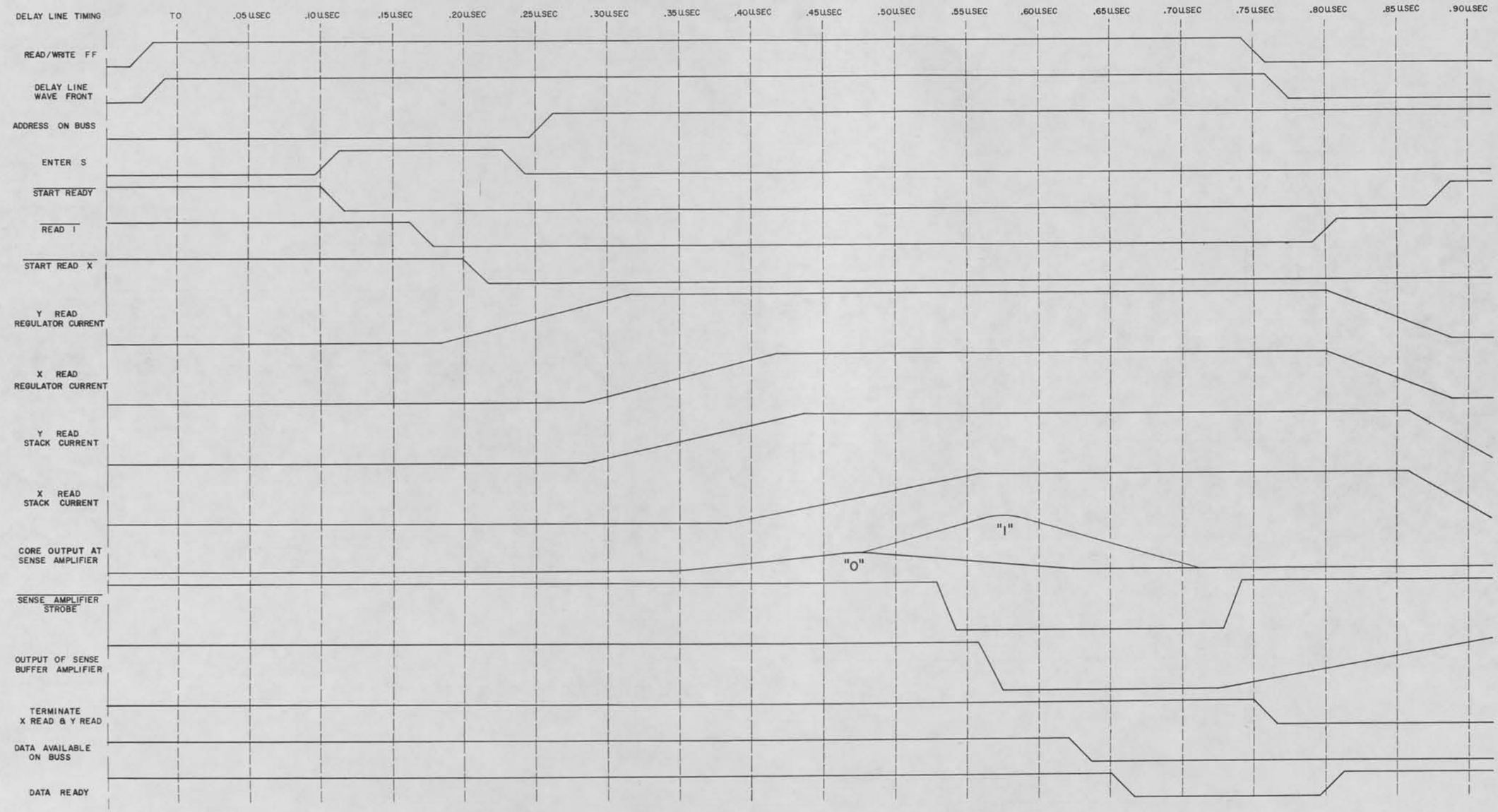

MEMORY TIMING (READ CYCLE)

SIZE	CODE IDENT	DWG NO.
D	90536	7072000
SCALE	CLASS A	SHEET 8

DWG. NO. 7072000

UD 1-8534C

REVISIONS						
ZONE	LTR	EIR	DESCRIPTION	CHK	DATE	APPROVED

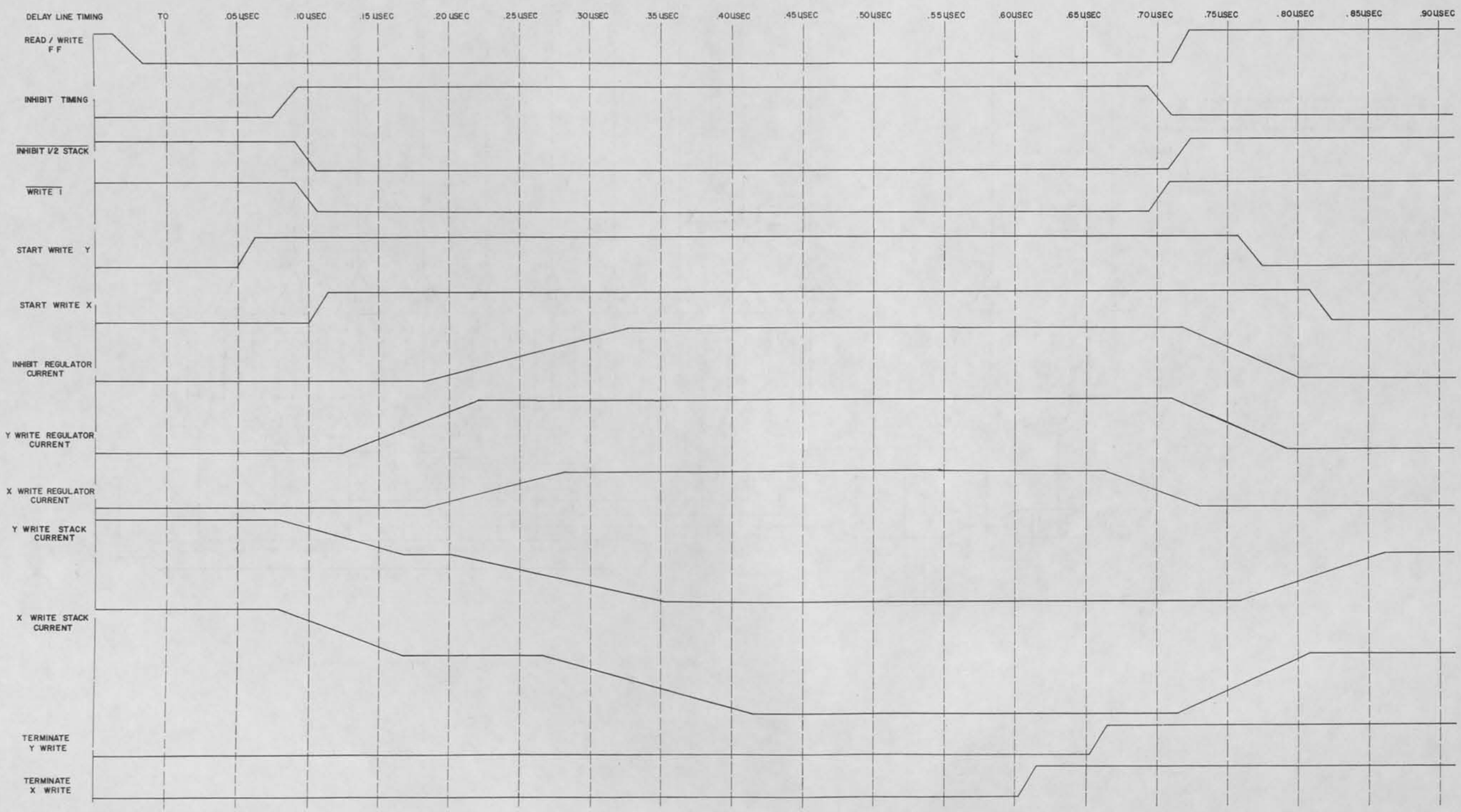

MEMORY TIMING (WRITE CYCLE)

SIZE	CODE IDENT	DWG NO.
D	90536	7072000
SCALE	CLASS	SHEET 9

DWG. NO. 7072000

UD 1-8534C

REVISIONS						
ZONE	LTR	EIR	DESCRIPTION	CHK	DATE	APPROVED
	B	D03855	SEE EIR		5-10-71	
	F	D10537	SEE EIR		11-2-73	

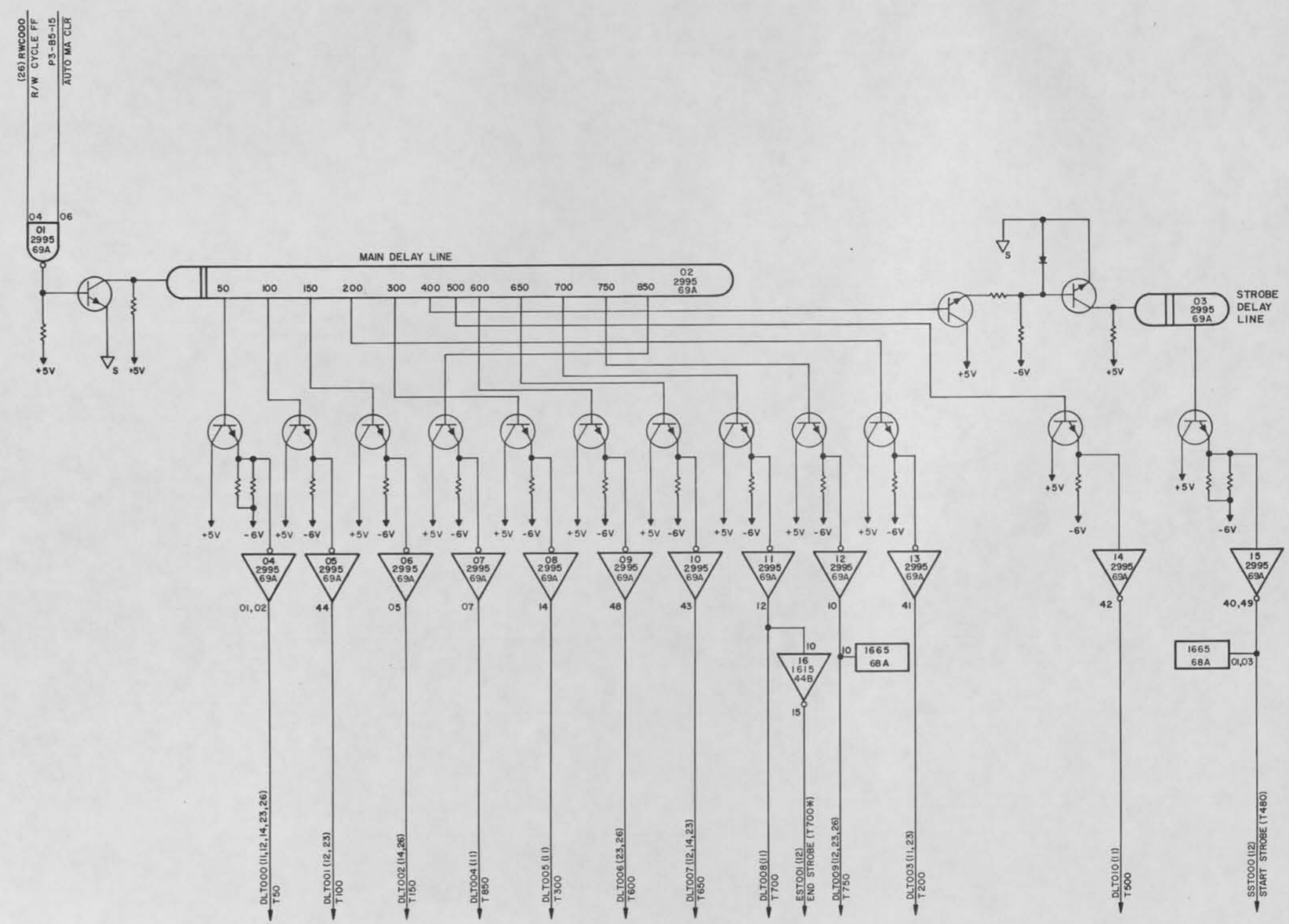

NOTES:

1. OUTPUTS OF LOGIC GATES CONNECTED TO MAIN DELAY LINE GO HIGH DURING WRITE AND GO LOW DURING READ.
2. OUTPUTS OF LOGIC GATES CONNECTED TO STROBE DELAY LINE GO LOW DURING WRITE AND GO HIGH DURING READ.

DWG. NO. 7072000

DELAY LINE

SIZE	CODE IDENT	DWG NO.
D	90536	7072000
SCALE	CLASS A	SHEET 10

CHANGE 2

UD 1-8534C

REVISIONS						
ZONE	LTR	EIR	DESCRIPTION	CHK	DATE	APPROVED
	F	D10537	SEE EIR		11-2-73	

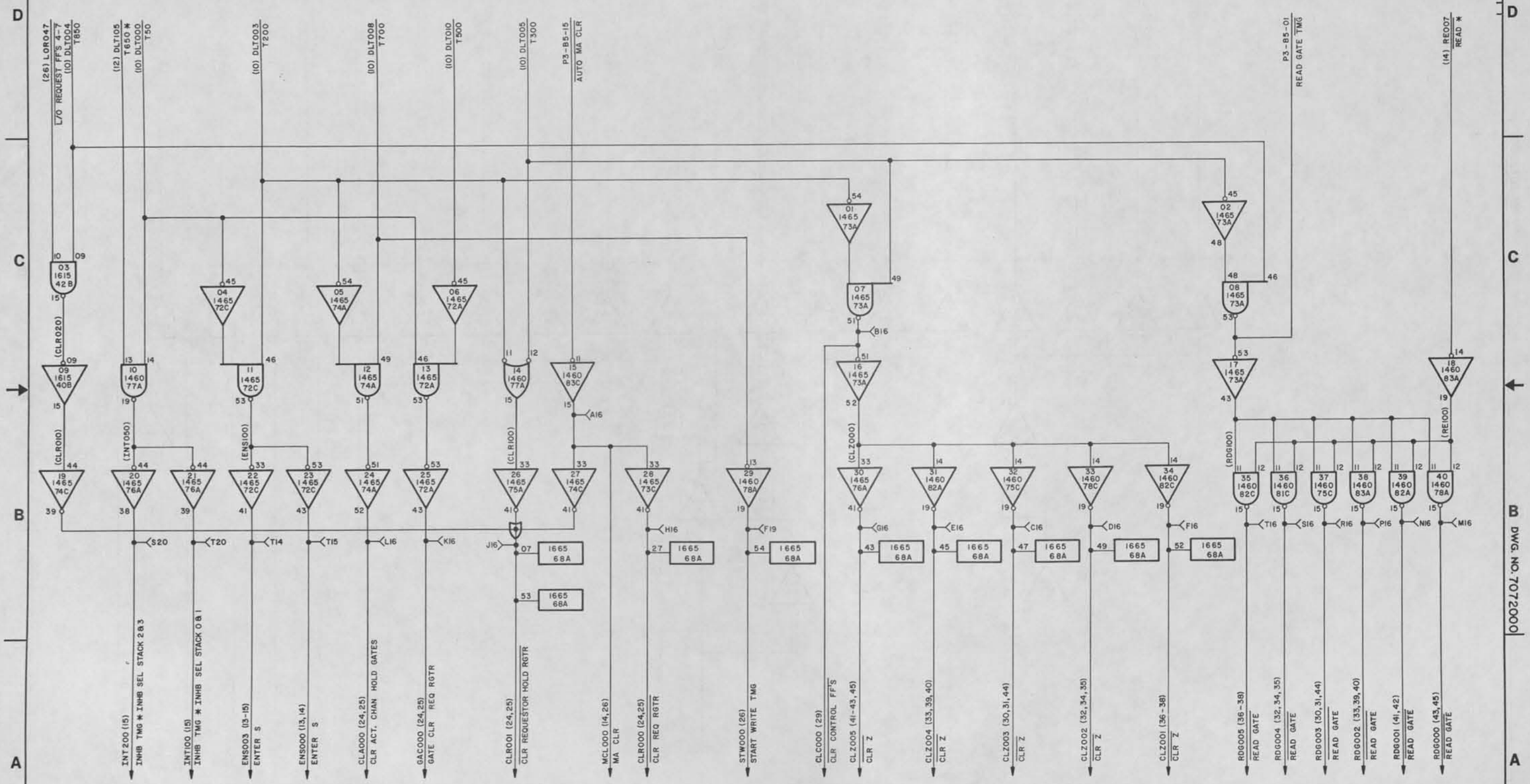

DWG. NO. 7072000

MEMORY TIMING I

CHANGE 2

SIZE	CODE IDENT	DWG NO.
D	90536	7072000
SCALE	CLASS A	SHEET 11

UD 1-8534C

REVISIONS						
ZONE	LTR	EIR	DESCRIPTION	CHK	DATE	APPROVED

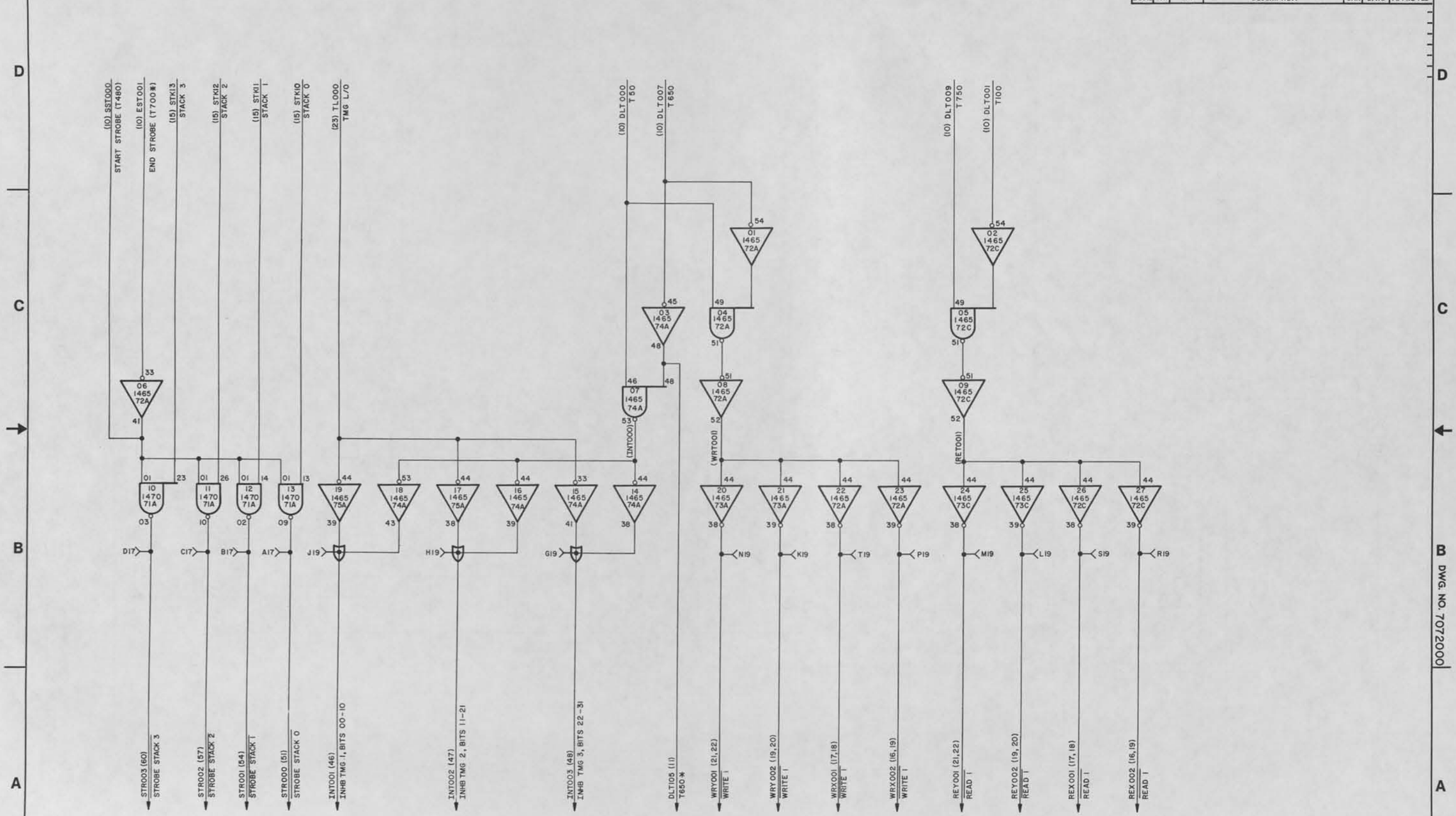

DWG. NO. 7072000

MEMORY TIMING 2

SIZE	CODE IDENT	DWG NO.
D	90536	7072000
SCALE	CLASS A	SHEET 2

UD 1-2534C

REVISIONS						
ZONE	LTR	EIR	DESCRIPTION	CHK	DATE	APPROVED

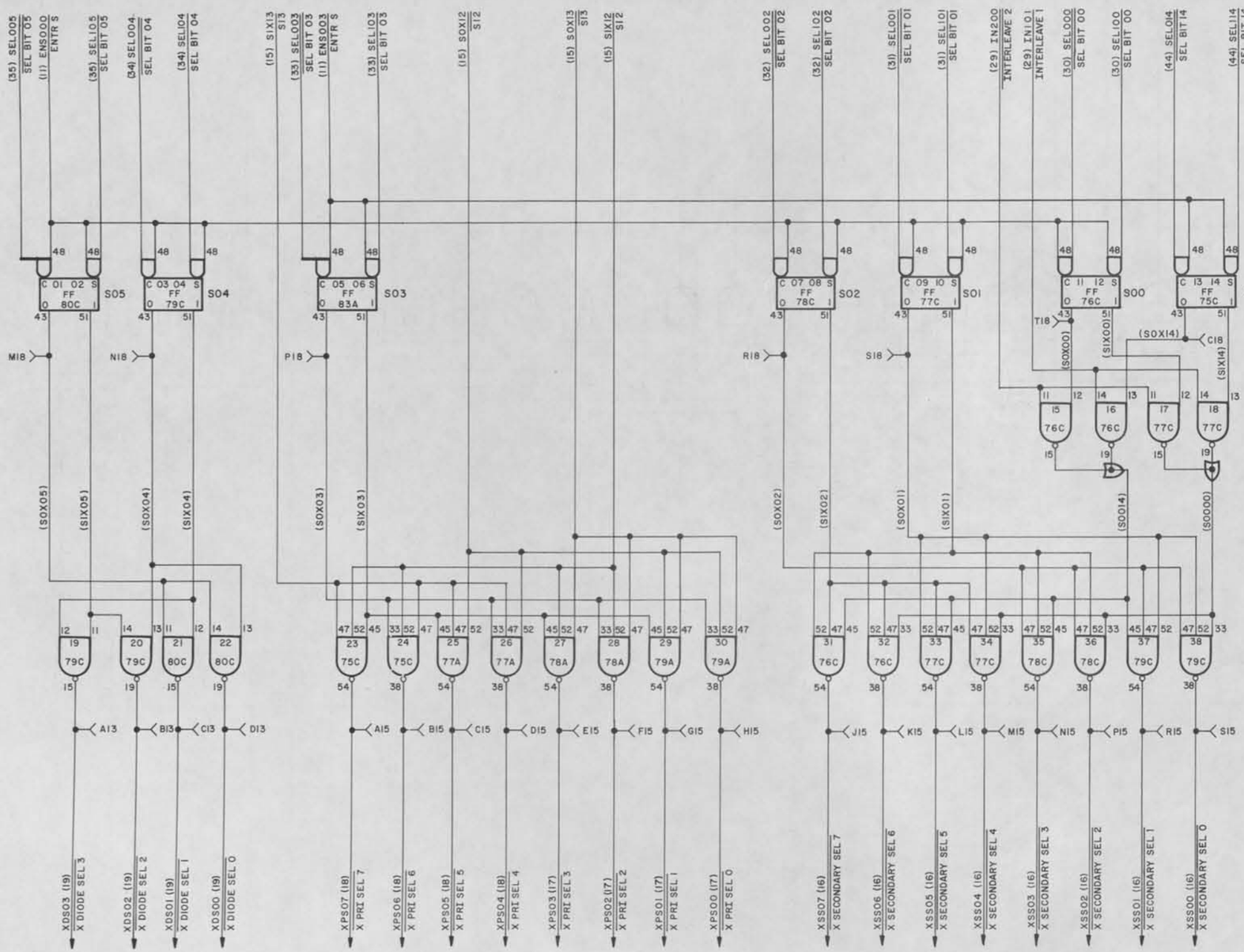

NOTE:
CARD TYPE 1460

S REGISTER BITS 00-05 & 14
ADDRESS TRANSLATION (X AXIS)

SIZE	CODE IDENT	DWG NO.
D	90536	7072000
SCALE	CLASS A	SHEET 13

DWG. NO. 7072000

UD 1-2534C

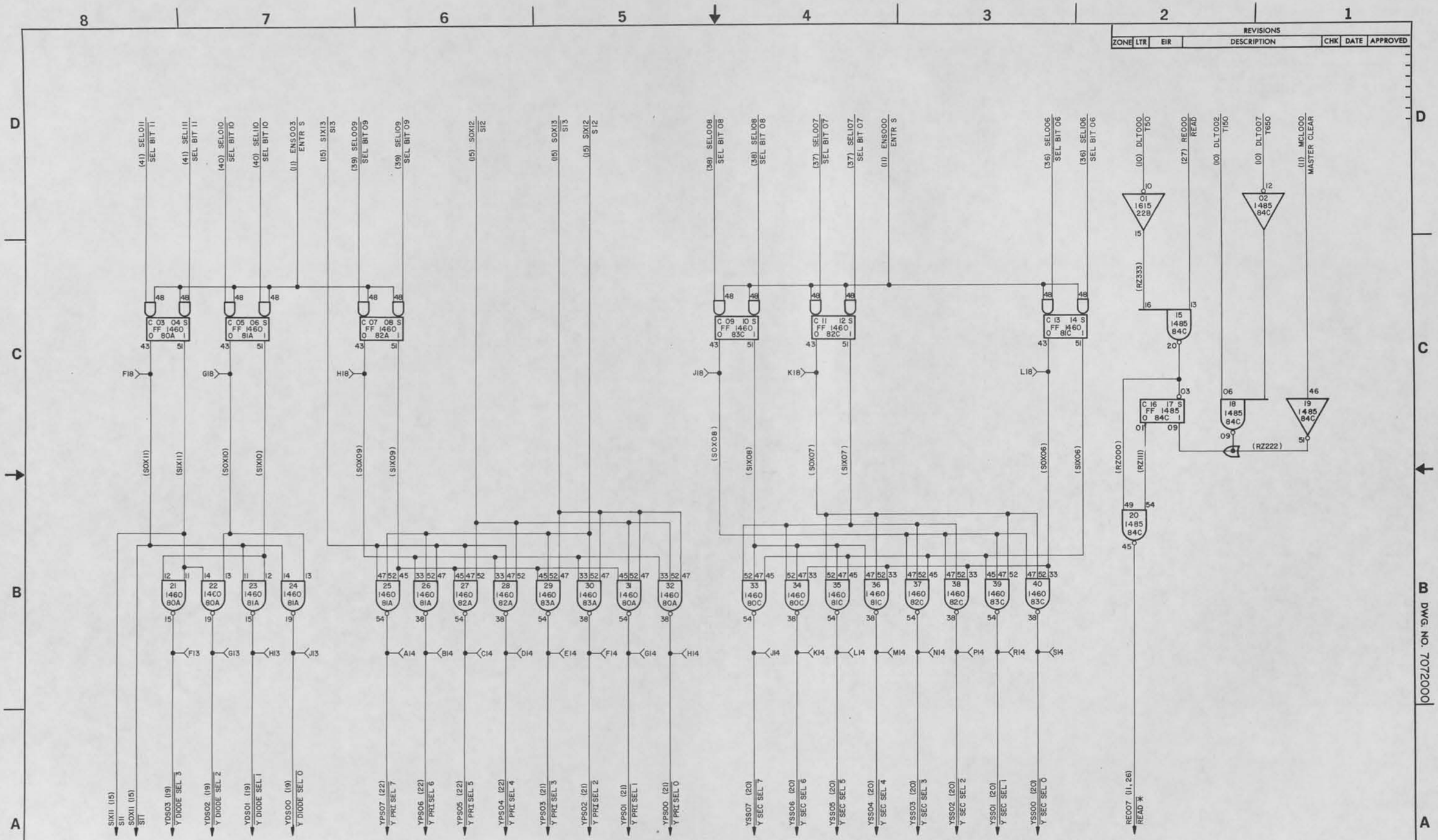

S REGISTER BITS 06–11
ADDRESS TRANSLATION (Y AXIS)

SIZE	CODE IDENT	DWG NO.
D	90536	7072000
SCALE	CLASS A	SHEET 4

UD 1-2534C

REVISIONS						
ZONE	LTR	EIR	DESCRIPTION	CHK	DATE	APPROVED

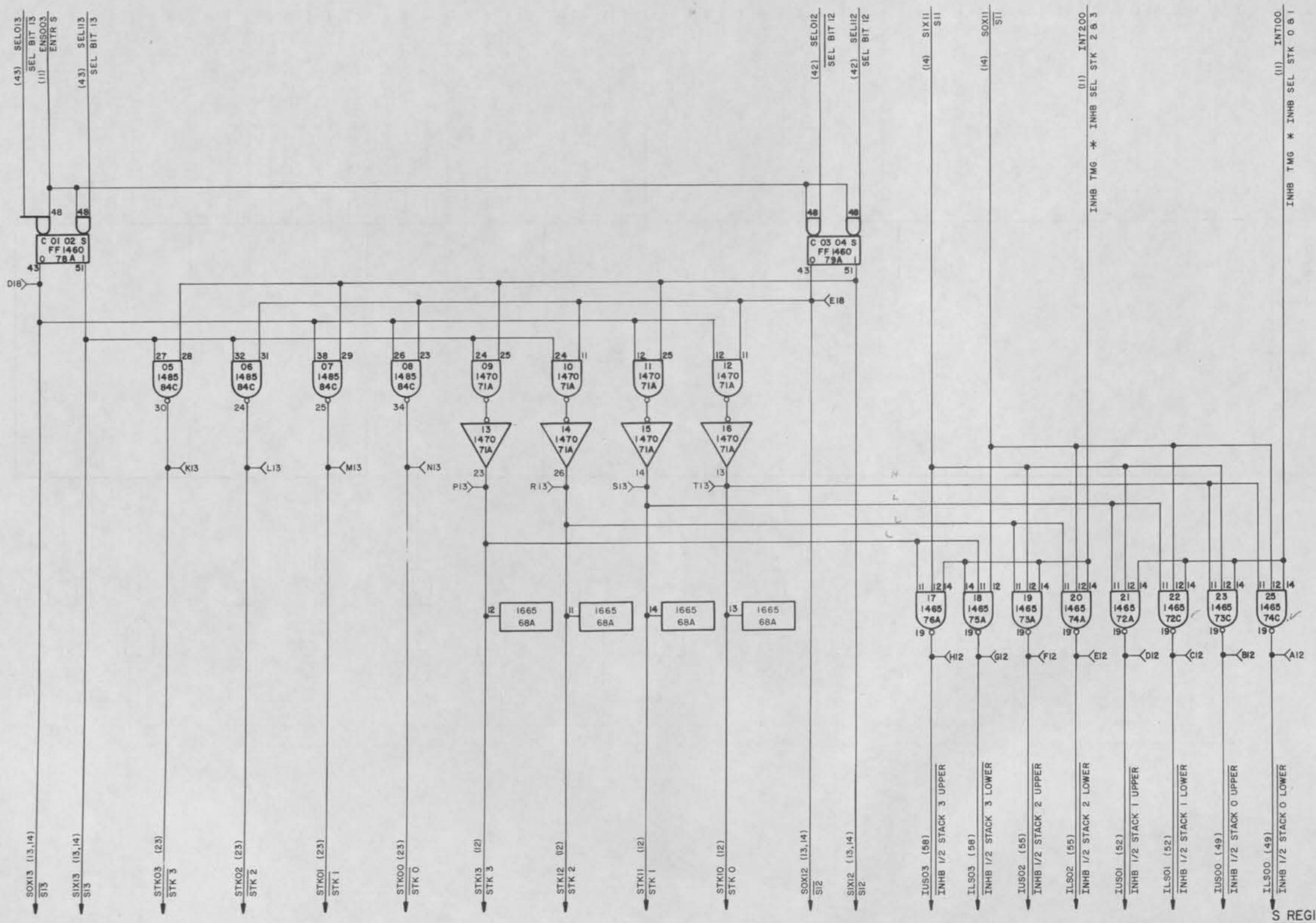

S REGISTER BITS 12 & 13,
ADDRESS TRANSLATION STACK & 1/2 STACK

SIZE	CODE IDENT	DWG NO.
D	90536	7072000
SCALE	CLASS A	SHEET 15

DWG. NO. 7072000

UD 1-2534C

REVISIONS						
ZONE	LTR	EIR	DESCRIPTION	CHK	DATE	APPROVED
	B	D03855	SEE EIR		5-10-71	

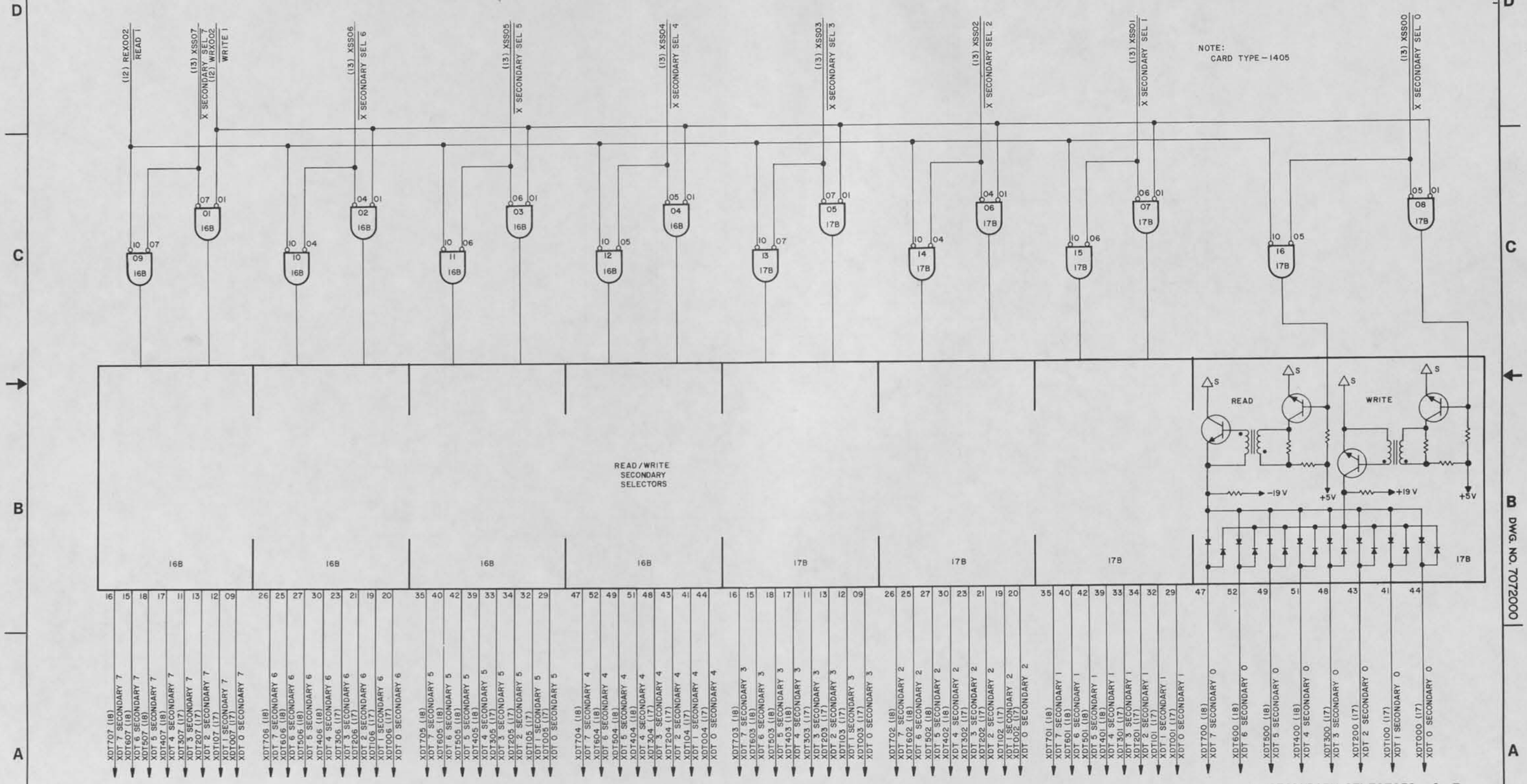

SIZE	CODE IDENT	DWG NO.
D	90536	7072000
SCALE	CLASS A	SHEET 16

DWG. NO. 7072000

UD 1-2534C

REVISIONS						
ZONE	LTR	EIR	DESCRIPTION	CHK	DATE	APPROVED

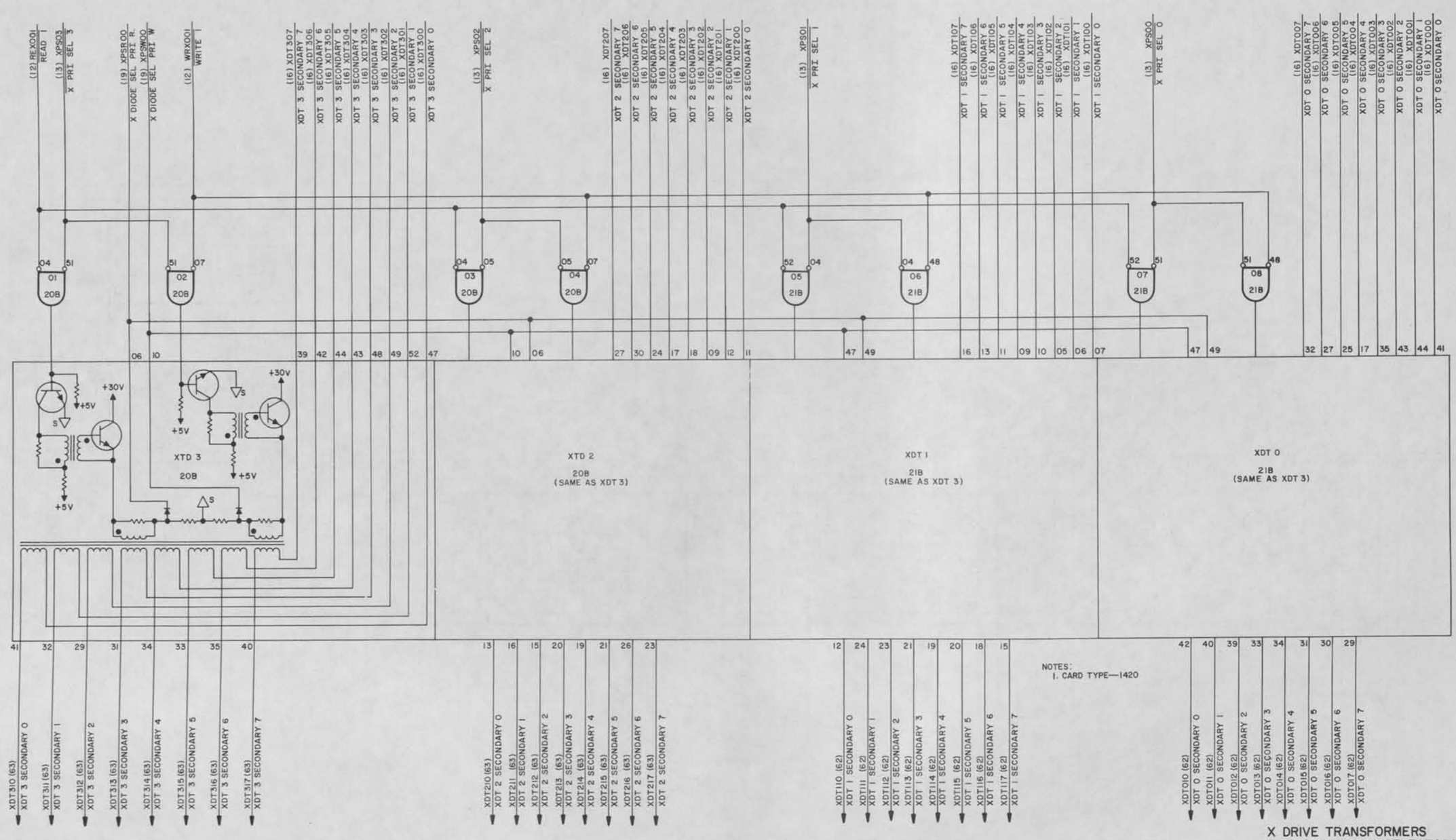

NOTES:
1. CARD TYPE—1420

X DRIVE TRANSFORMERS
0-3 & PRIMARY SELECTORS

SIZE	CODE IDENT	DWG NO.
D	90536	7072000
SCALE	CLASS A	SHEET 17

DWG. NO. 7072000

UD 1-8534C

REVISIONS						
ZONE	LTR	EIR	DESCRIPTION	CHK	DATE	APPROVED

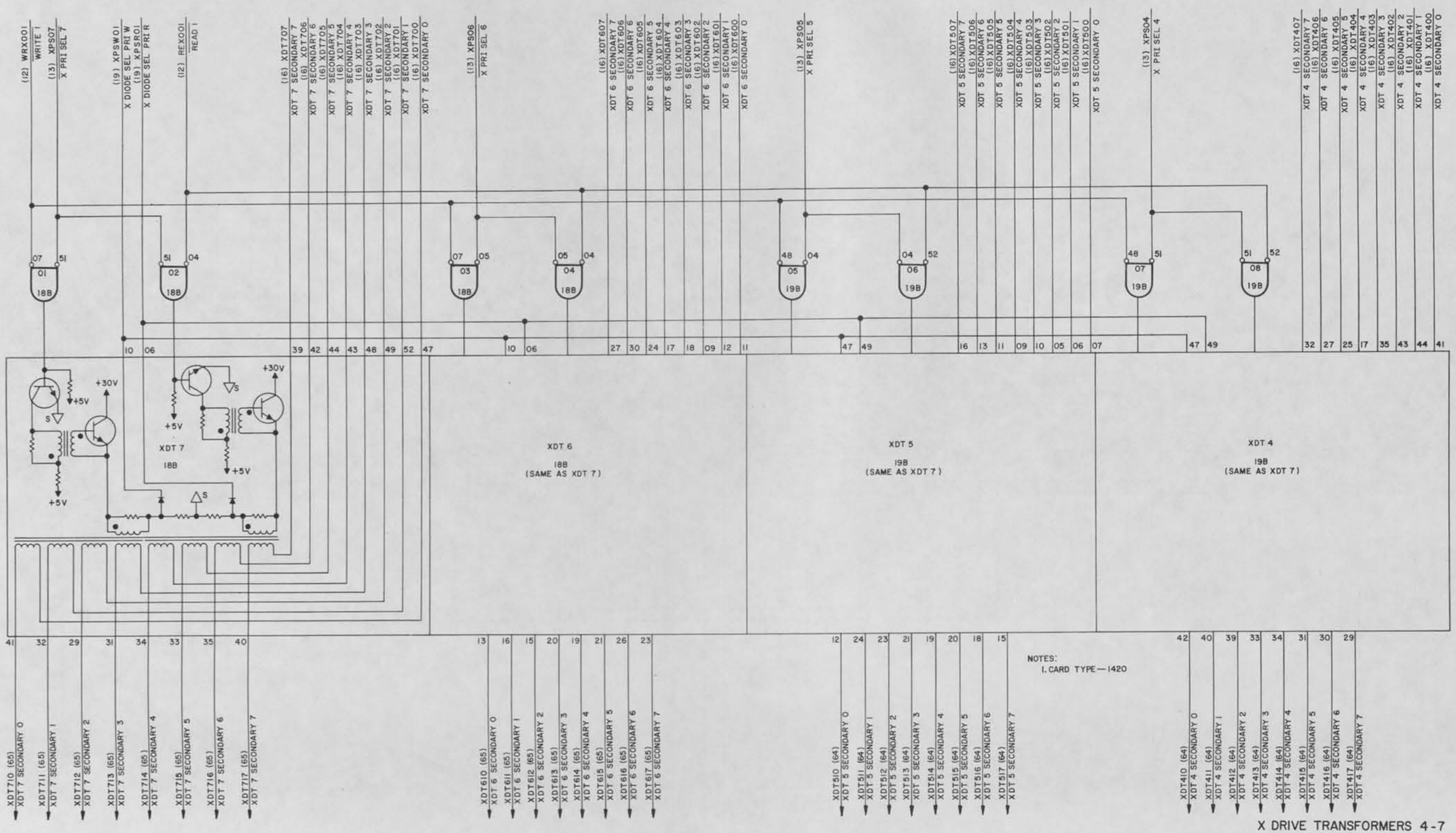

NOTES:
1. CARD TYPE—1420

X DRIVE TRANSFORMERS 4-7
& PRIMARY SELECTORS

SIZE	CODE IDENT	DWG NO.
D	90536	7072000
SCALE	CLASS A	SHEET 18

DWG. NO. 7072000

UD 1-8534C

REVISIONS						
ZONE	LTR	EIR	DESCRIPTION	CHK	DATE	APPROVED

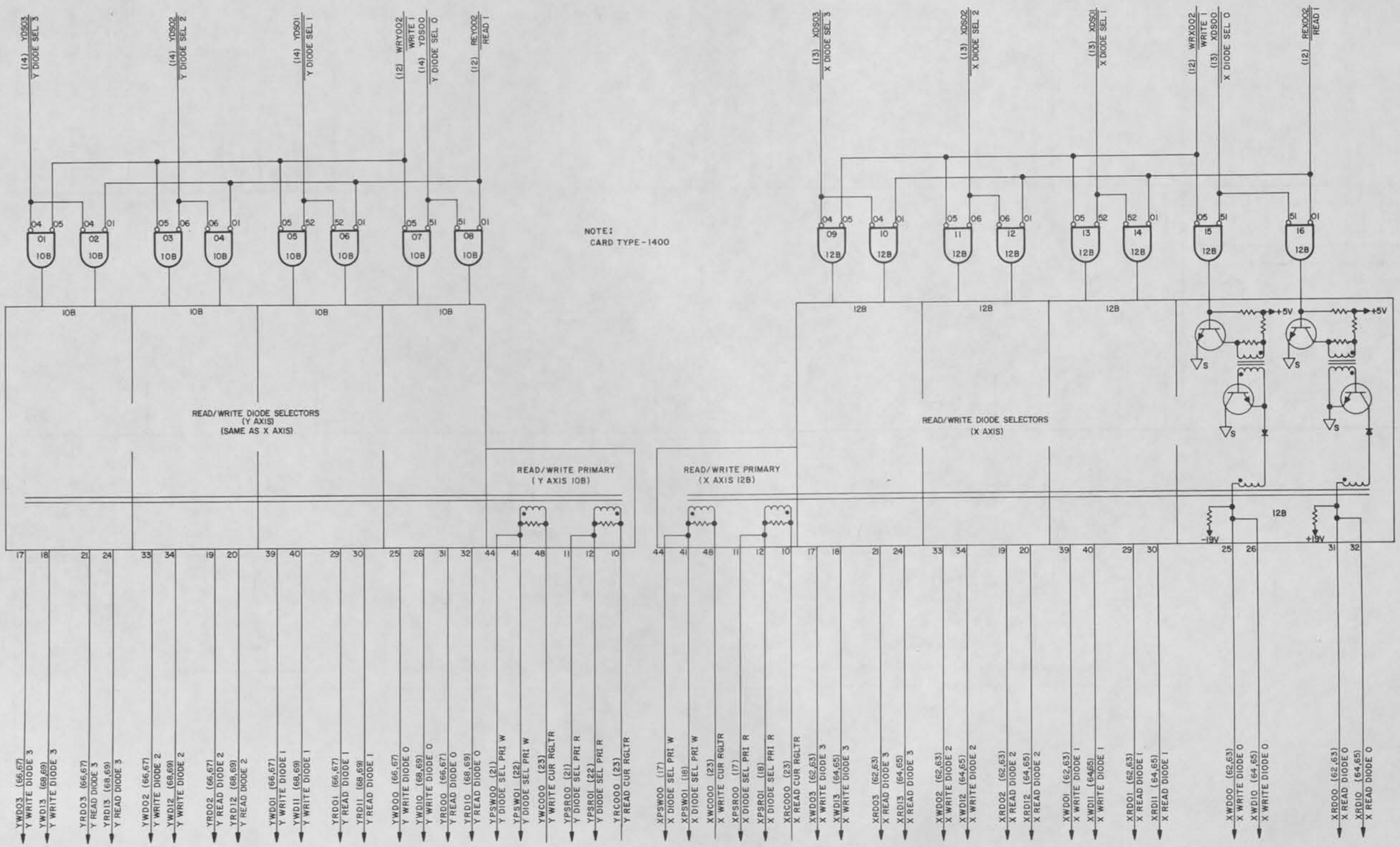

NOTE:
CARD TYPE-1400

READ OR WRITE DIODE SELECTORS (X & Y AXIS)

SIZE	CODE IDENT	DWG NO.
D	90536	7072000
SCALE	CLASS A	SHEET 9

DWG. NO. 7072000

UD 1-9534C

REVISIONS						
ZONE	LTR	EIR	DESCRIPTION	CHK	DATE	APPROVED

NOTE:
CARD TYPE - 1405

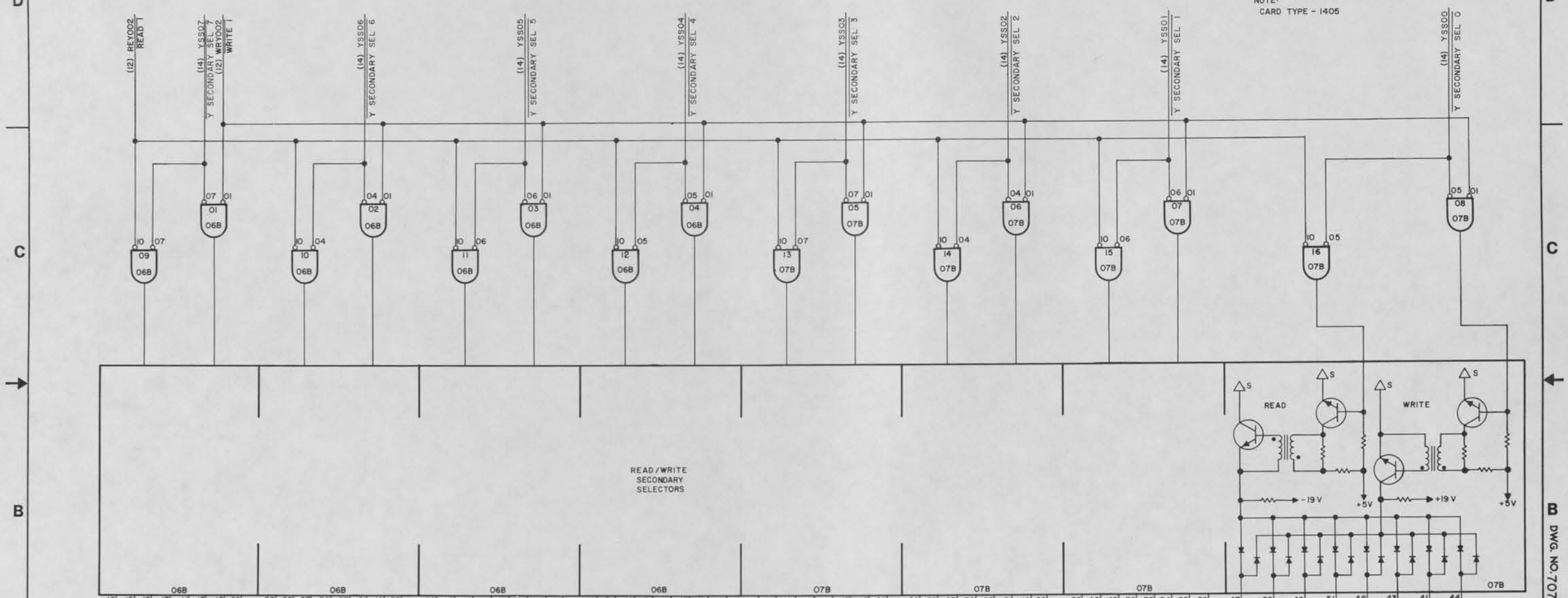

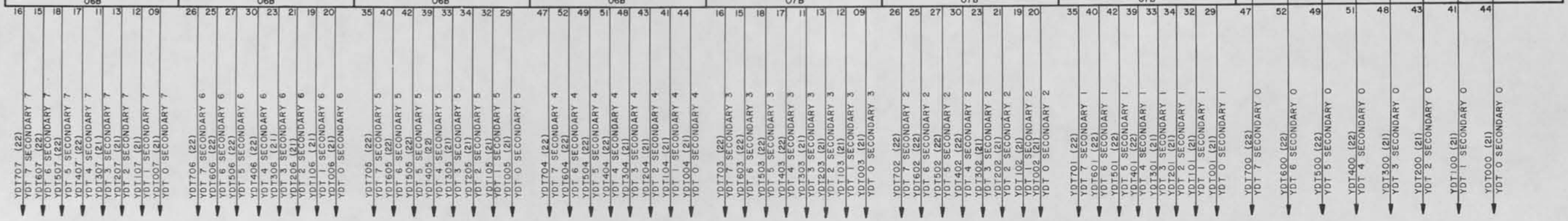

Y SECONDARY SELECTORS, 0-7

DWG. NO. 7072000

SIZE	CODE IDENT	DWG NO.
D	90536	7072000
SCALE	CLASS A	SHEET 20

UD 1-8534C

REVISIONS						
ZONE	LTR	EIR	DESCRIPTION	CHK	DATE	APPROVED

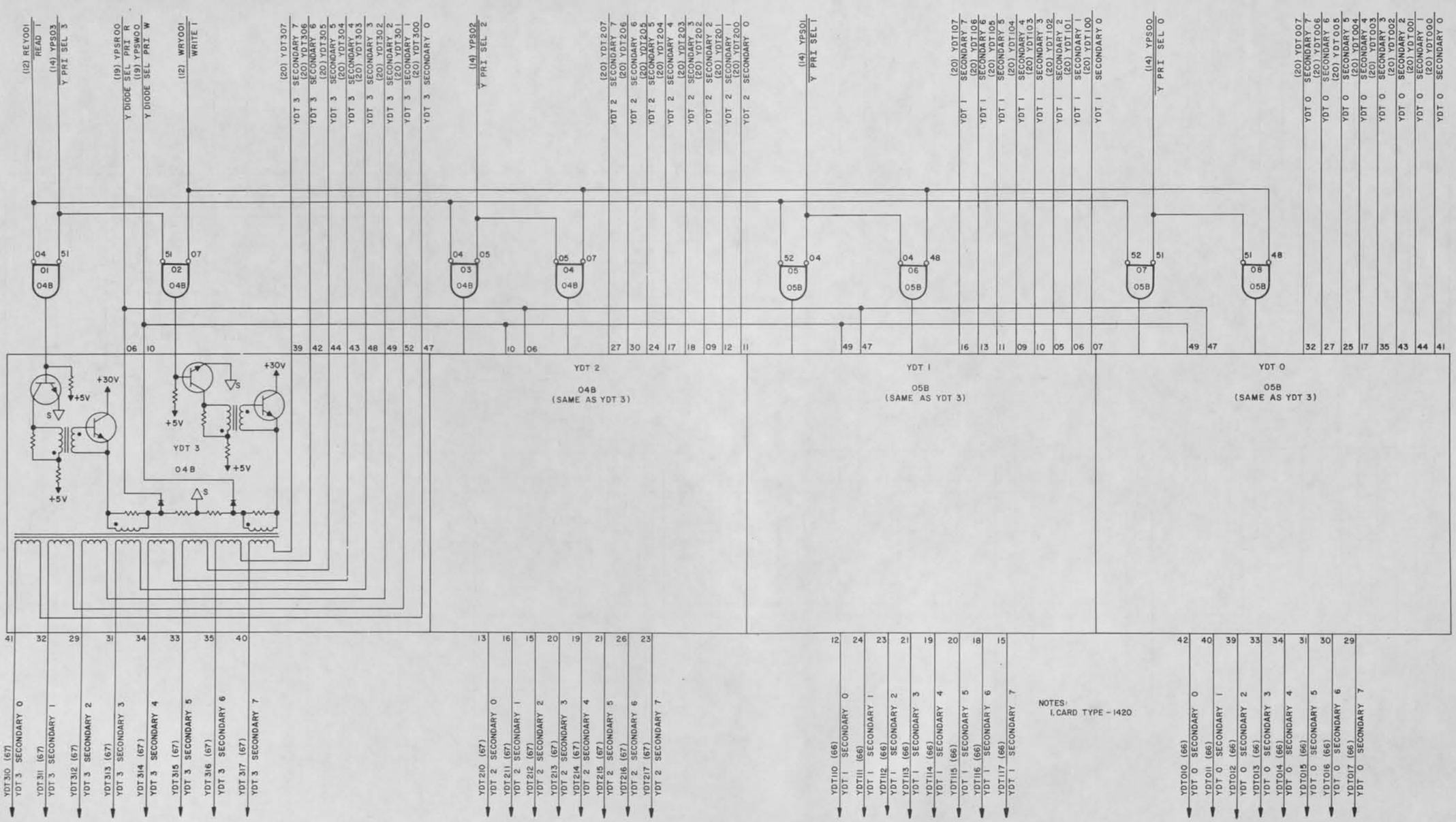

NOTES:
1. CARD TYPE - 1420

Y DRIVE TRANSFORMERS
0-3 & PRIMARY SELECTORS

SIZE	CODE IDENT	DWG NO.
D	90536	7072000
SCALE	CLASS A	SHEET 21

DWG. NO. 7072000

UD 1-8534C

REVISIONS						
ZONE	LTR	EIR	DESCRIPTION	CHK	DATE	APPROVED

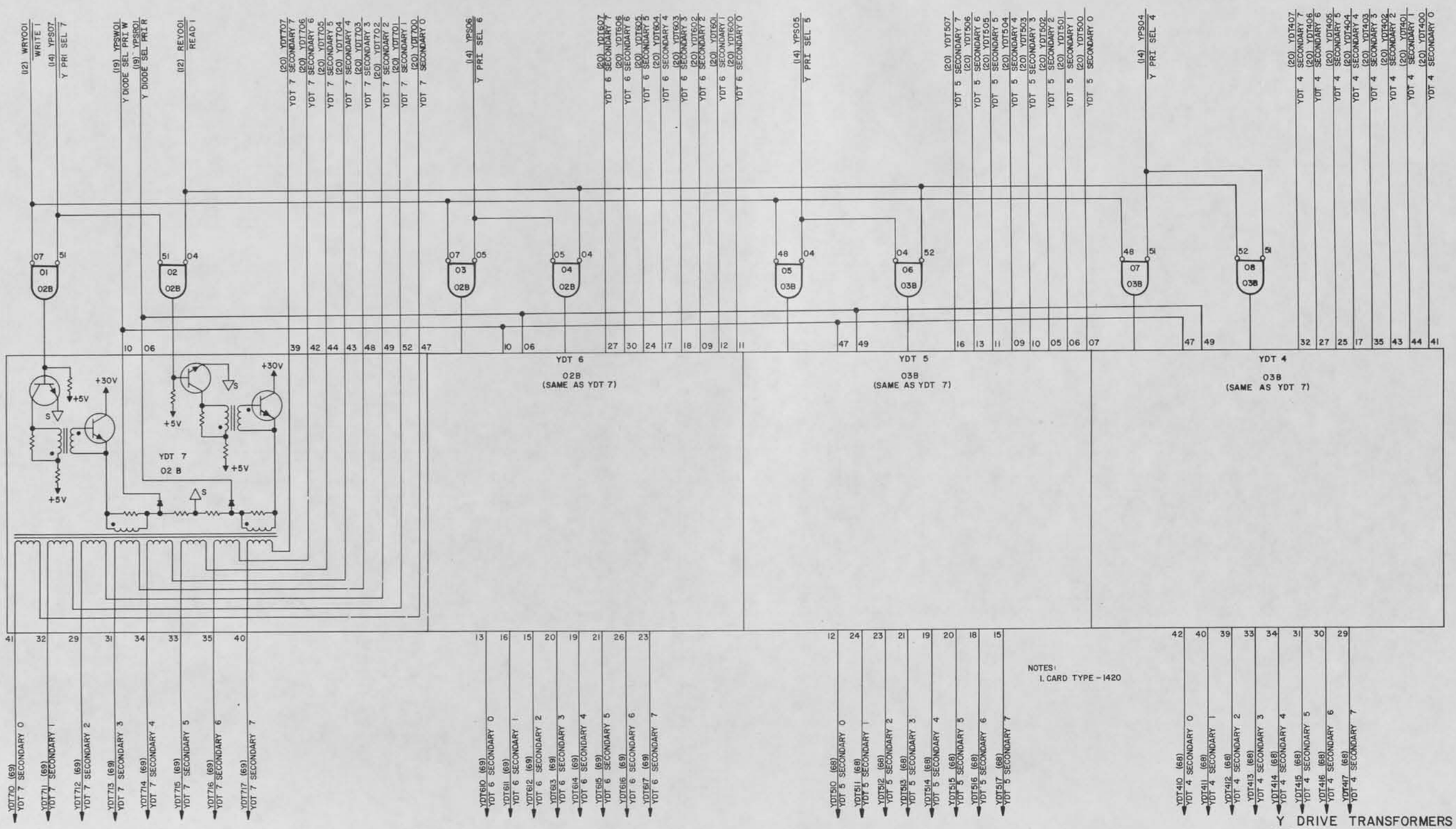

NOTES:
1. CARD TYPE - 1420

Y DRIVE TRANSFORMERS
4-7 & PRIMARY SELECTORS

SIZE	CODE IDENT	DWG NO.
D	90536	7072000
SCALE	CLASS A	SHEET 22

DWG. NO. 7072000

UD 1-9534C

REVISIONS						
ZONE	LTR	EIR	DESCRIPTION	CHK	DATE	APPROVED

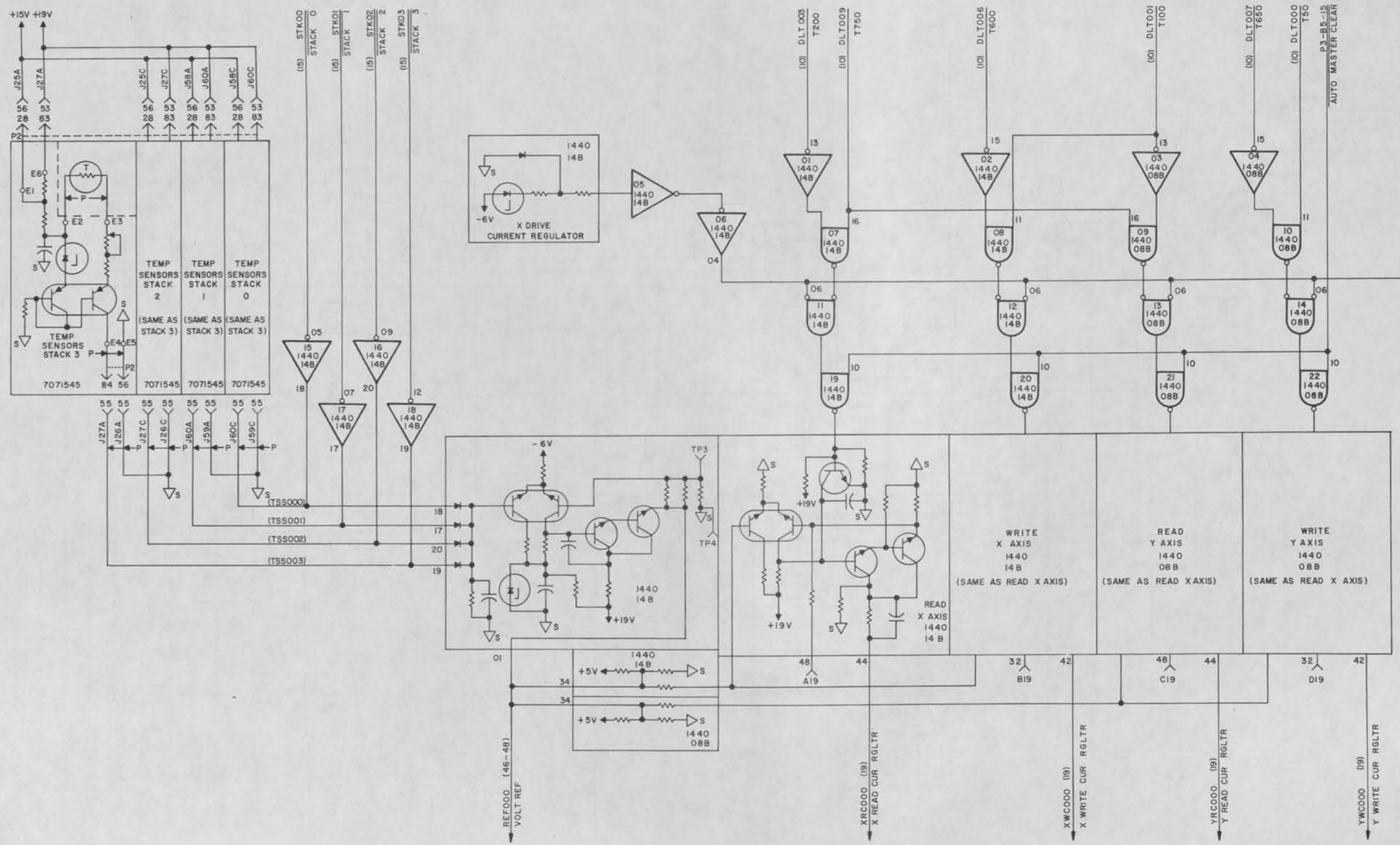

DRIVE CURRENT REGULATORS (X & Y AXIS)

SIZE	CODE IDENT	DWG NO.
D	90536	7072000
SCALE	CLASS A	SHEET 23

DWG. NO. 7072000

UD 1-8534C

REVISIONS						
ZONE	LTR	EIR	DESCRIPTION	CHK	DATE	APPROVED
	C	D04553	SEE EIR		6-11-71	

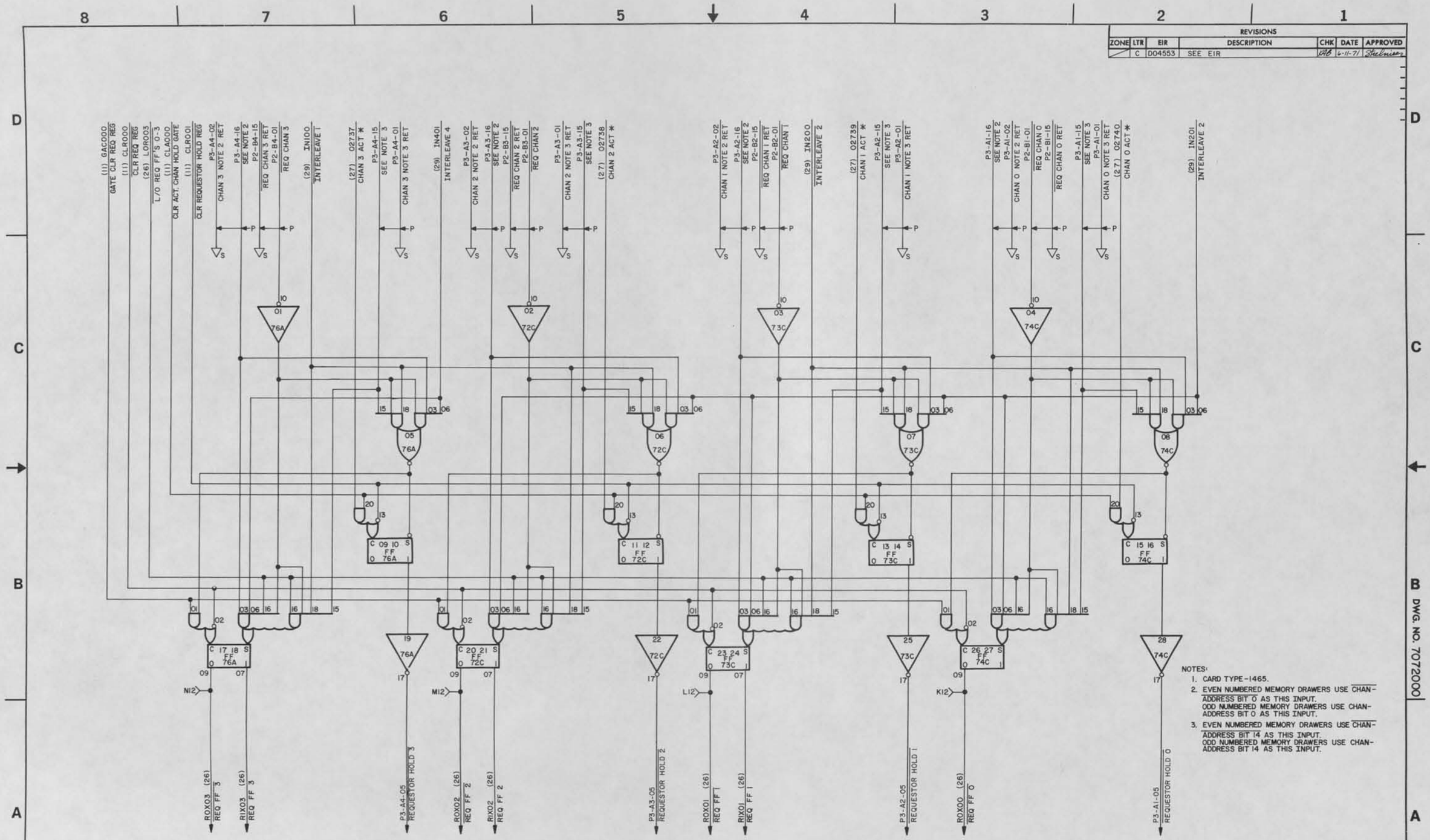

NOTES:

1. CARD TYPE-1465.
2. EVEN NUMBERED MEMORY DRAWERS USE $\overline{\text{CHAN-ADDRESS BIT 0}}$ AS THIS INPUT.
   ODD NUMBERED MEMORY DRAWERS USE CHAN-ADDRESS BIT 0 AS THIS INPUT.
3. EVEN NUMBERED MEMORY DRAWERS USE $\overline{\text{CHAN-ADDRESS BIT 14}}$ AS THIS INPUT.
   ODD NUMBERED MEMORY DRAWERS USE CHAN-ADDRESS BIT 14 AS THIS INPUT.

CHANNEL REQUEST REGISTER, CHANNELS 0-3

SIZE	CODE IDENT	DWG NO.
D	90536	7072000
SCALE	CLASS A	SHEET 24

DWG. NO. 7072000

UD 1-8534C

REVISIONS						
ZONE	LTR	EIR	DESCRIPTION	CHK	DATE	APPROVED
	C	D04553	SEE EIR		6-11-71	

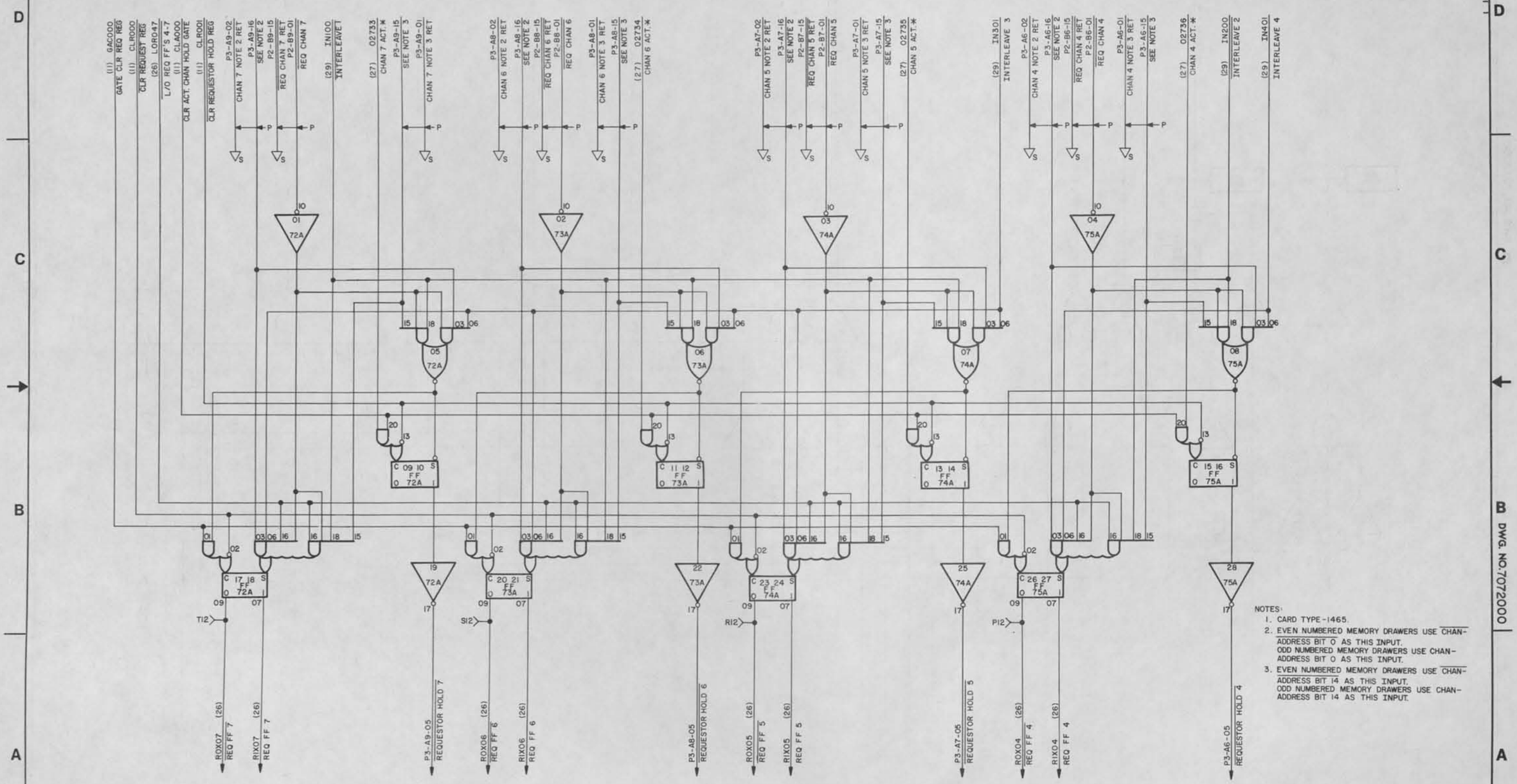

NOTES:
1. CARD TYPE-1465.
2. EVEN NUMBERED MEMORY DRAWERS USE $\overline{\text{CHAN-ADDRESS BIT 0}}$ AS THIS INPUT.
   ODD NUMBERED MEMORY DRAWERS USE CHAN-ADDRESS BIT 0 AS THIS INPUT.
3. EVEN NUMBERED MEMORY DRAWERS USE $\overline{\text{CHAN-ADDRESS BIT 14}}$ AS THIS INPUT.
   ODD NUMBERED MEMORY DRAWERS USE CHAN-ADDRESS BIT 14 AS THIS INPUT.

CHANNEL REQUEST REGISTER, CHANNELS 4-7

SIZE	CODE IDENT	DWG NO.
D	90536	7072000
SCALE	CLASS A	SHEET 25

DWG. NO. 7072000

UD 1-8534C

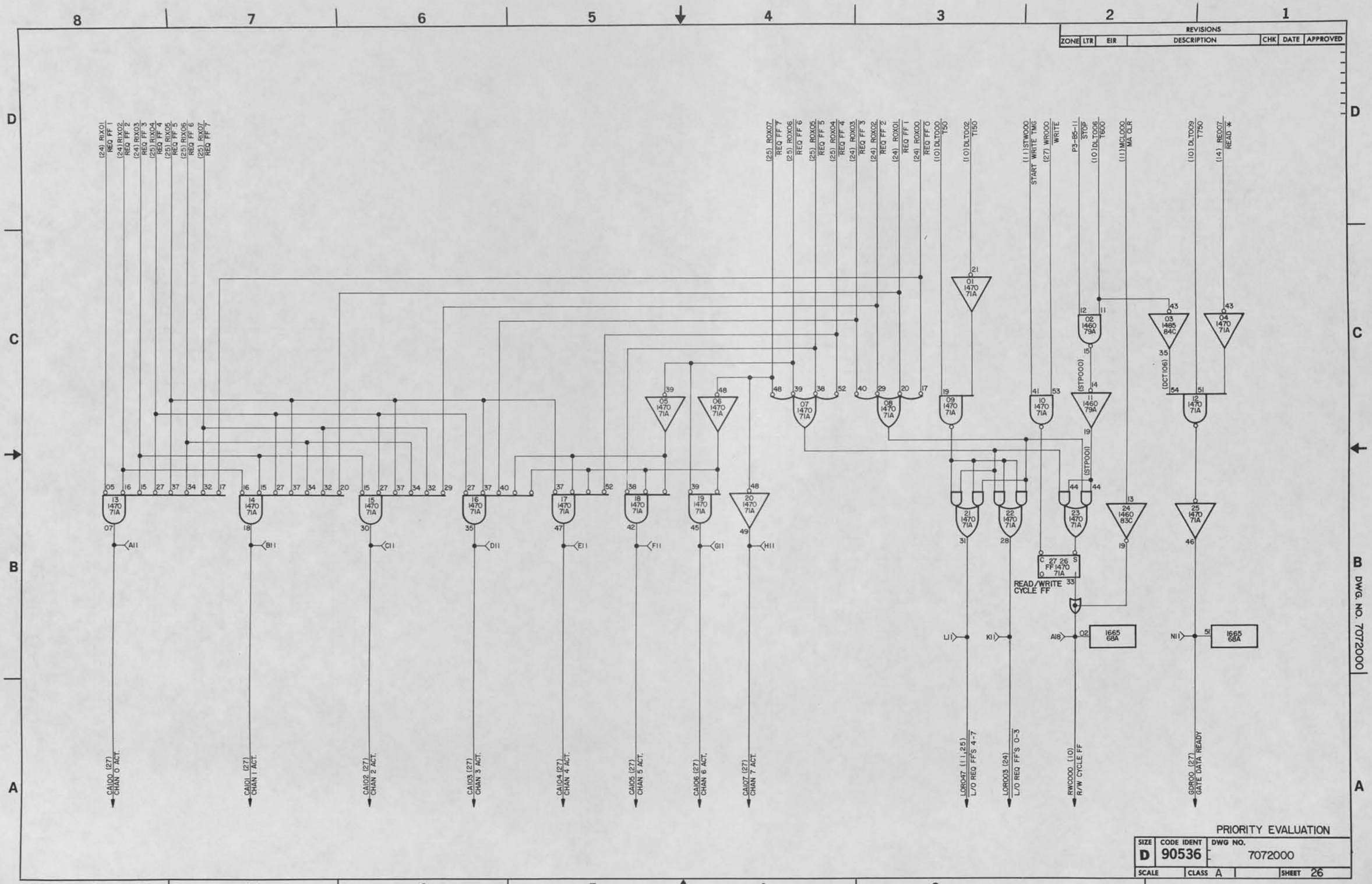
REVISIONS
ZONE LTR EIR DESCRIPTION CHK DATE APPROVED
(24) RIX01 REQ FF 1
(24) RIX02 REQ FF 2
(24) RIX03 REQ FF 3
(25) RIX04 REQ FF 4
(25) RIX05 REQ FF 5
(25) RIX06 REQ FF 6
(25) RIX07 REQ FF 7
(25) ROX07 REQ FF 7
(25) ROX06 REQ FF 6
(25) ROX05 REQ FF 5
(25) ROX04 REQ FF 4
(24) ROX03 REQ FF 3
(24) ROX02 REQ FF 2
(24) ROX01 REQ FF 1
(24) ROX00 REQ FF 0
(10) DLT000 T50
(10) DLT002 T150
(11) STW000 START WRITE TMG
(27) WR000 WRITE
P3-B5-11 STOP
(10) DLT006 T600
(11) MCL000 MA CLR
(10) DLT009 T750
(14) REC07 READ *
CA100 (27) CHAN 0 ACT.
CA101 (27) CHAN 1 ACT.
CA102 (27) CHAN 2 ACT.
CA103 (27) CHAN 3 ACT.
CA104 (27) CHAN 4 ACT.
CA105 (27) CHAN 5 ACT.
CA106 (27) CHAN 6 ACT.
CA107 (27) CHAN 7 ACT.
LOR047 (11,25) L/O REQ FF'S 4-7
LOR003 (24) L/O REQ FF'S 0-3
RWC000 (10) R/W CYCLE FF
GDR00 (27) GATE DATA READY
READ/WRITE CYCLE FF
1665 68A
1665 68A
PRIORITY EVALUATION
SIZE D
CODE IDENT 90536
DWG NO. 7072000
SCALE
CLASS A
SHEET 26
DWG. NO. 7072000
UD 1-8534C

REVISIONS						
ZONE	LTR	EIR	DESCRIPTION	CHK	DATE	APPROVED

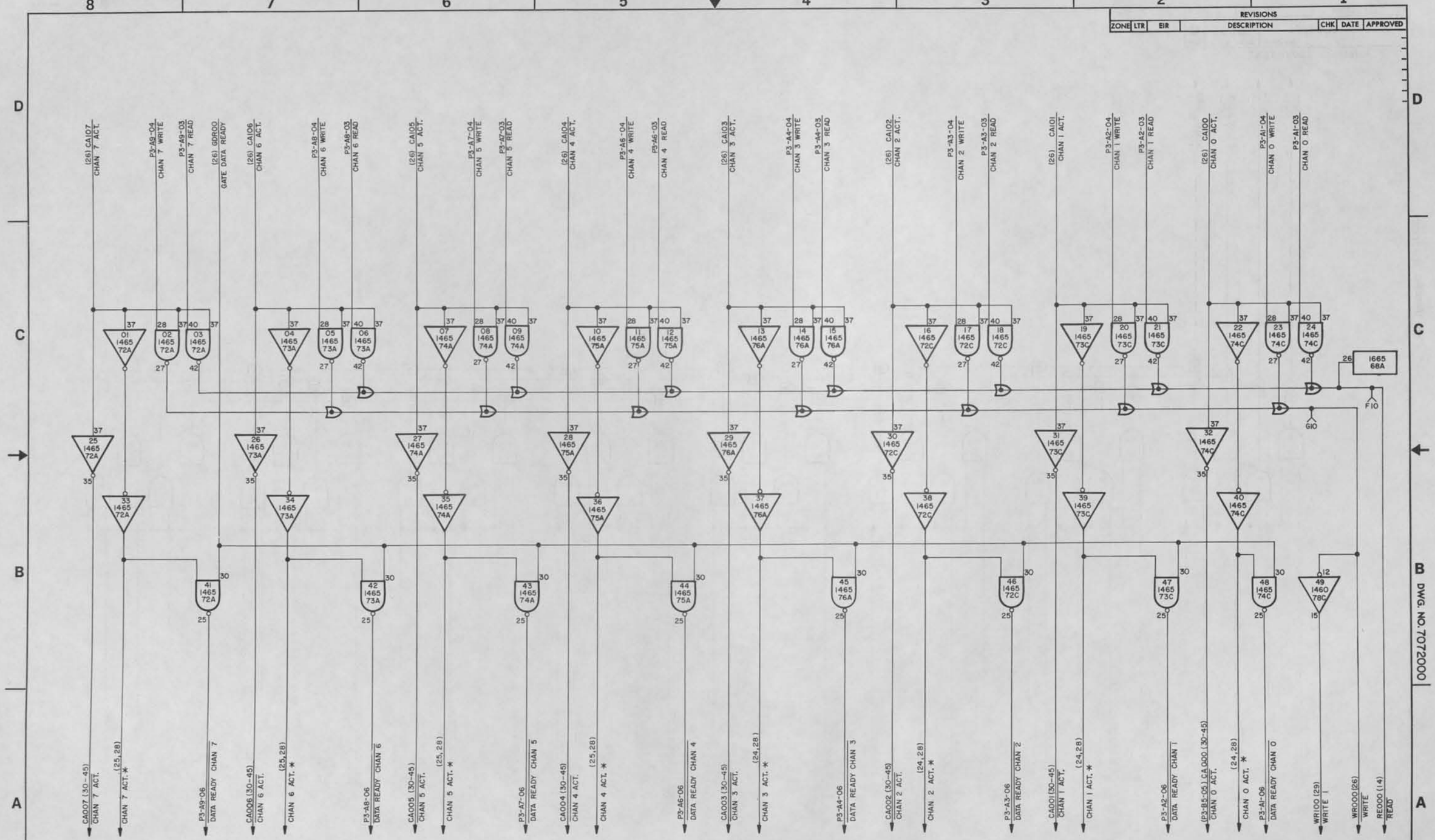

INTERFACE CONTROL I

SIZE	CODE IDENT	DWG NO.
D	90536	7072000
SCALE	CLASS A	SHEET 27

DWG. NO. 7072000

UD 1-8534C

REVISIONS						
ZONE	LTR	EIR	DESCRIPTION	CHK	DATE	APPROVED

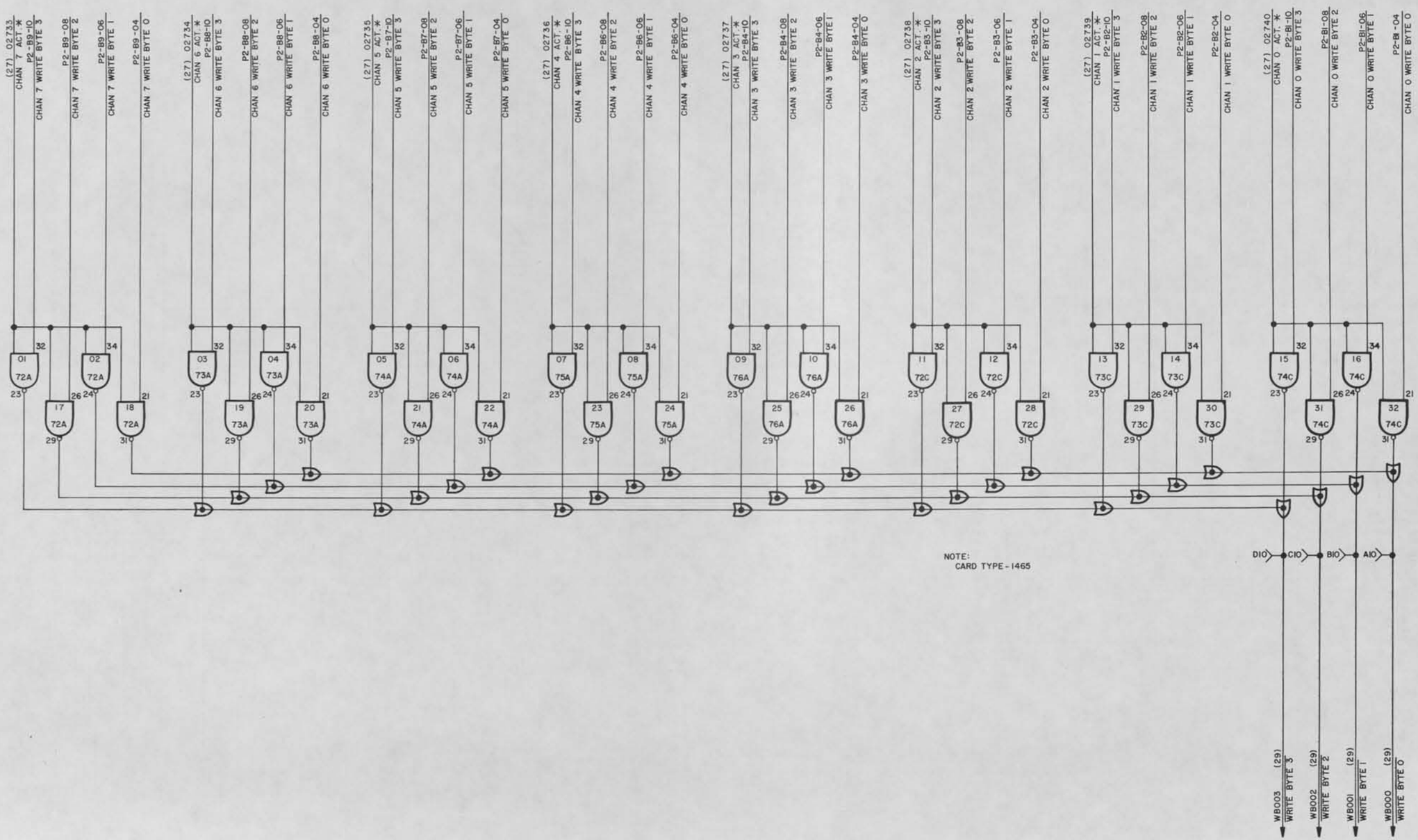

NOTE:
CARD TYPE - 1465

INTERFACE CONTROL 2

SIZE	CODE IDENT	DWG NO.
D	90536	7072000
SCALE	CLASS A	SHEET 28

DWG. NO. 7072000

UD 1-0534C

REVISIONS						
ZONE	LTR	EIR	DESCRIPTION	CHK	DATE	APPROVED
	C	D04553	SEE EIR	RAG	6-11-71	[illegible]
	G	D09611	SEE EIR	[illegible]	[illegible]	[illegible]
	H	D11335	SEE EIR	JH	11-24-74	[illegible]

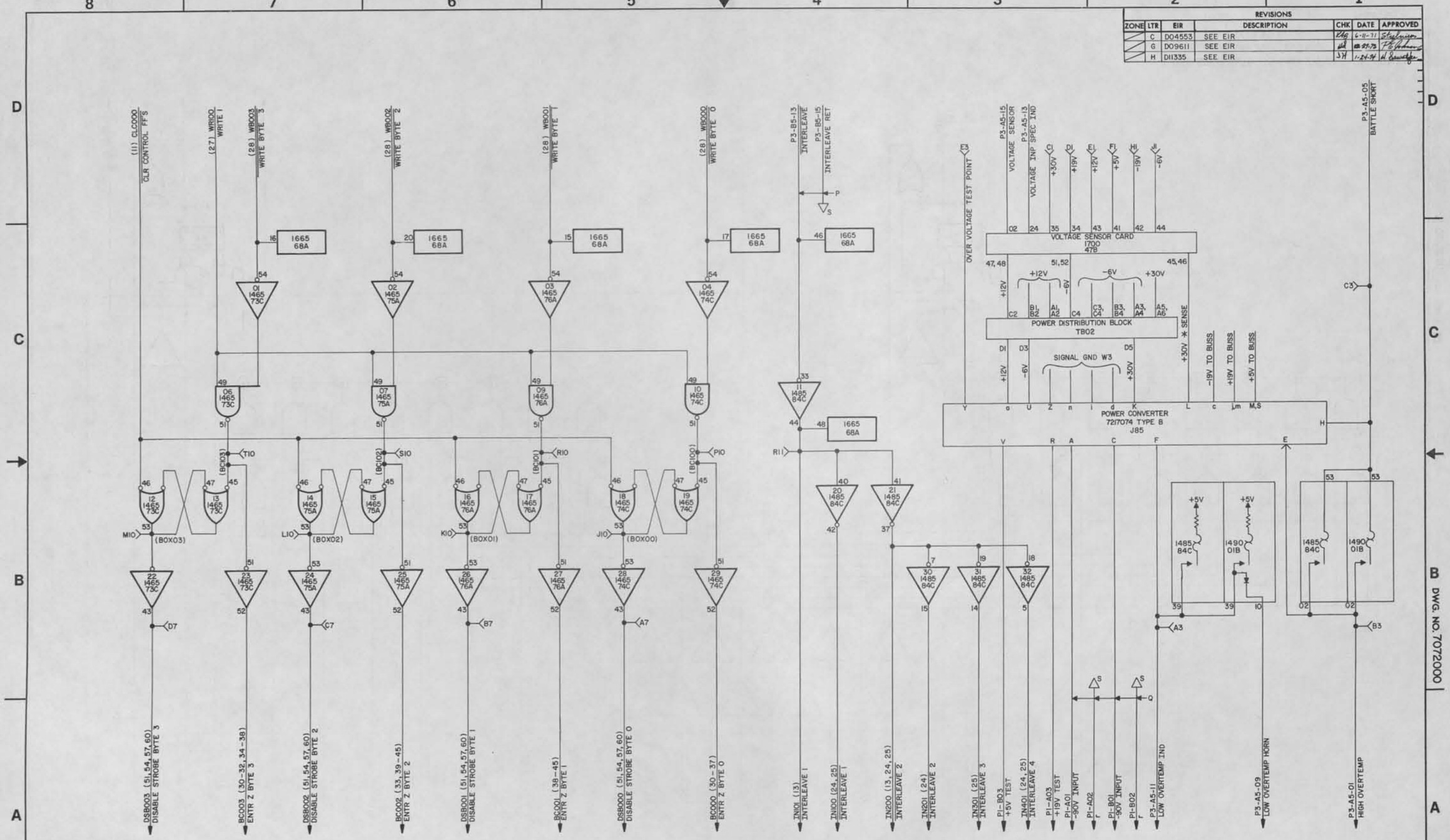

CHANGE 2

BYTE CONTROL

SIZE	CODE IDENT	DWG NO.
D	90536	7072000
SCALE	CLASS A	SHEET 29

DWG. NO. 7072000

UD 1-8534C

REVISIONS						
ZONE	LTR	EIR	DESCRIPTION	CHK	DATE	APPROVED

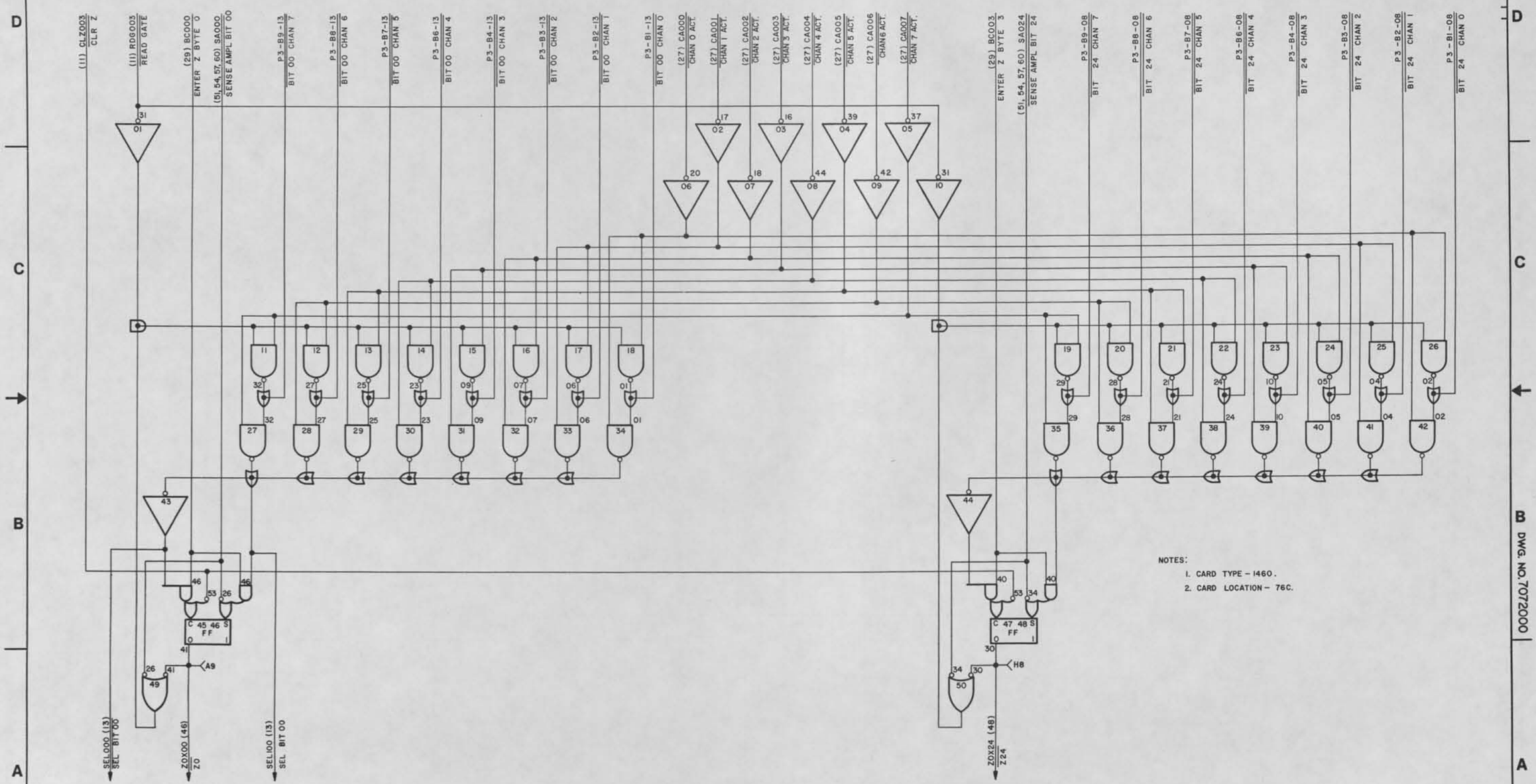

NOTES:

1. CARD TYPE – 1460.
2. CARD LOCATION – 76C.

DWG. NO. 7072000

Z REGISTER BITS 00 AND 24 AND SELECTOR

SIZE	CODE IDENT	DWG NO.
D	90536	7072000
SCALE	CLASS A	SHEET 30

UD 1-8534C

REVISIONS						
ZONE	LTR	EIR	DESCRIPTION	CHK	DATE	APPROVED

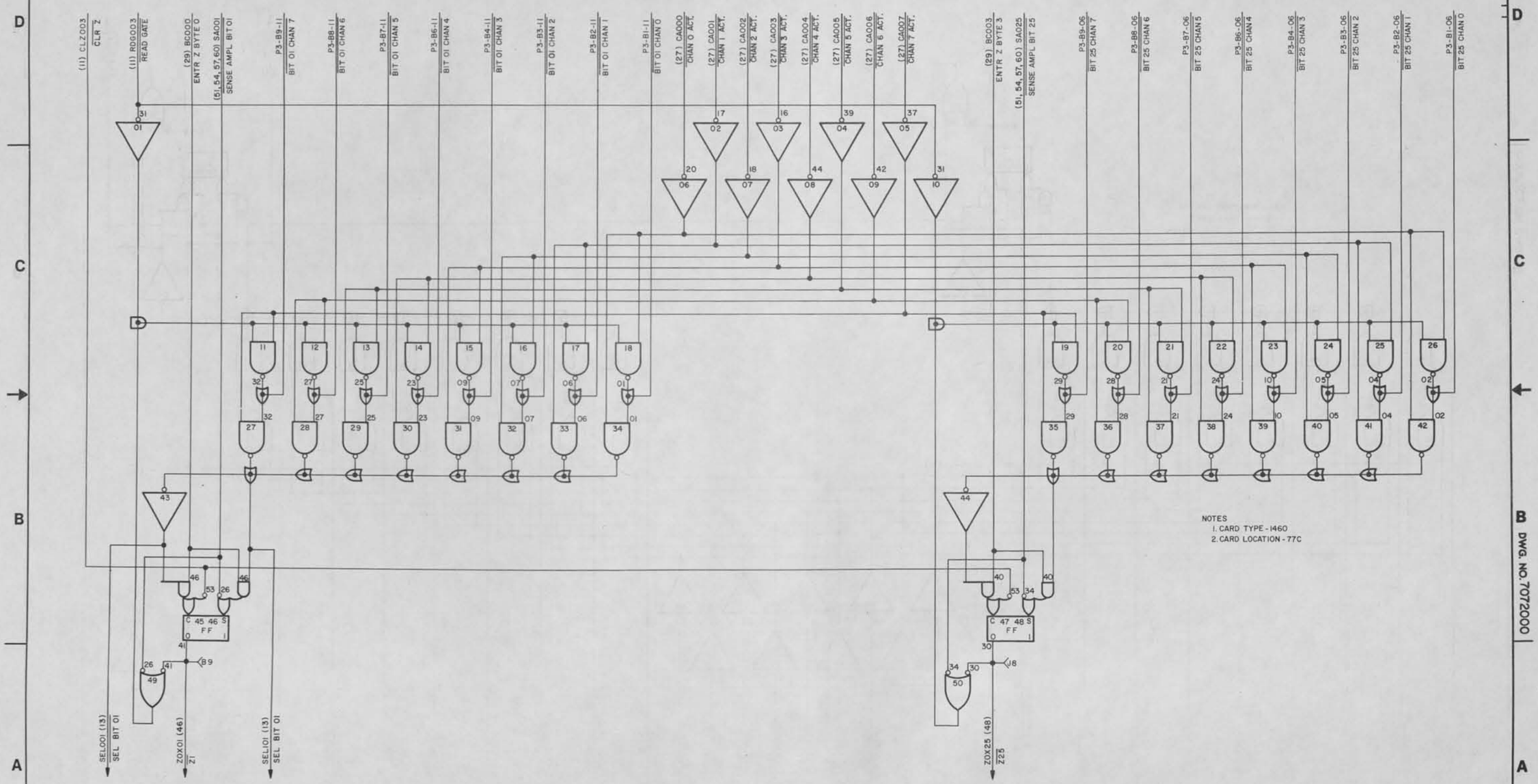

NOTES
1. CARD TYPE - 1460
2. CARD LOCATION - 77C

Z REGISTER BITS 01 AND 25 AND SELECTOR

SIZE	CODE IDENT	DWG NO.
D	90536	7072000
SCALE	CLASS A	SHEET 31

DWG. NO. 7072000

UD 1-8534C

REVISIONS						
ZONE	LTR	EIR	DESCRIPTION	CHK	DATE	APPROVED

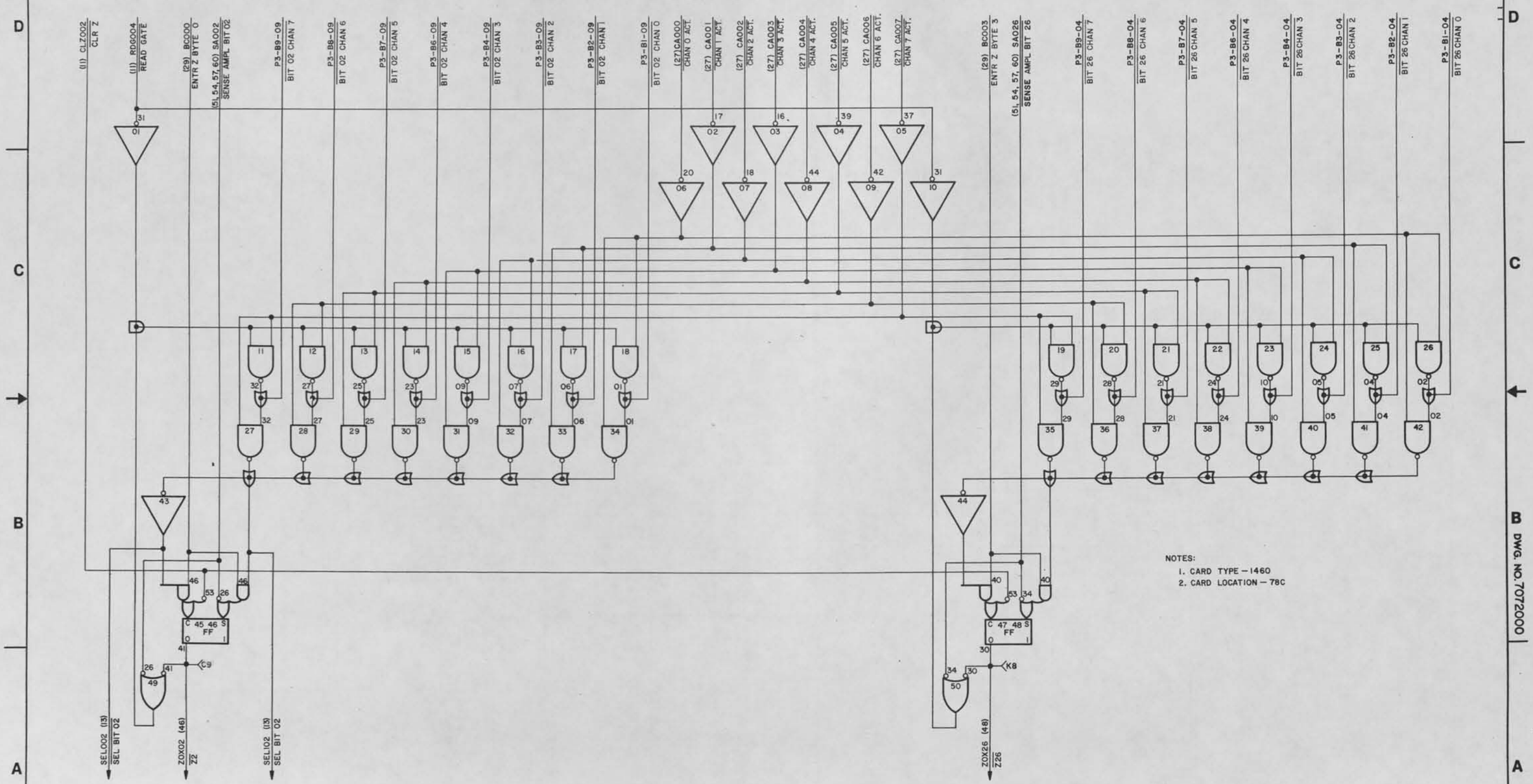

NOTES:
1. CARD TYPE — 1460
2. CARD LOCATION — 78C

DWG. NO. 7072000

Z REGISTER BITS 02 AND 26 AND SELECTOR

SIZE	CODE IDENT	DWG NO.
D	90536	7072000
SCALE	CLASS A	SHEET 32

UD 1-2534C

REVISIONS						
ZONE	LTR	EIR	DESCRIPTION	CHK	DATE	APPROVED

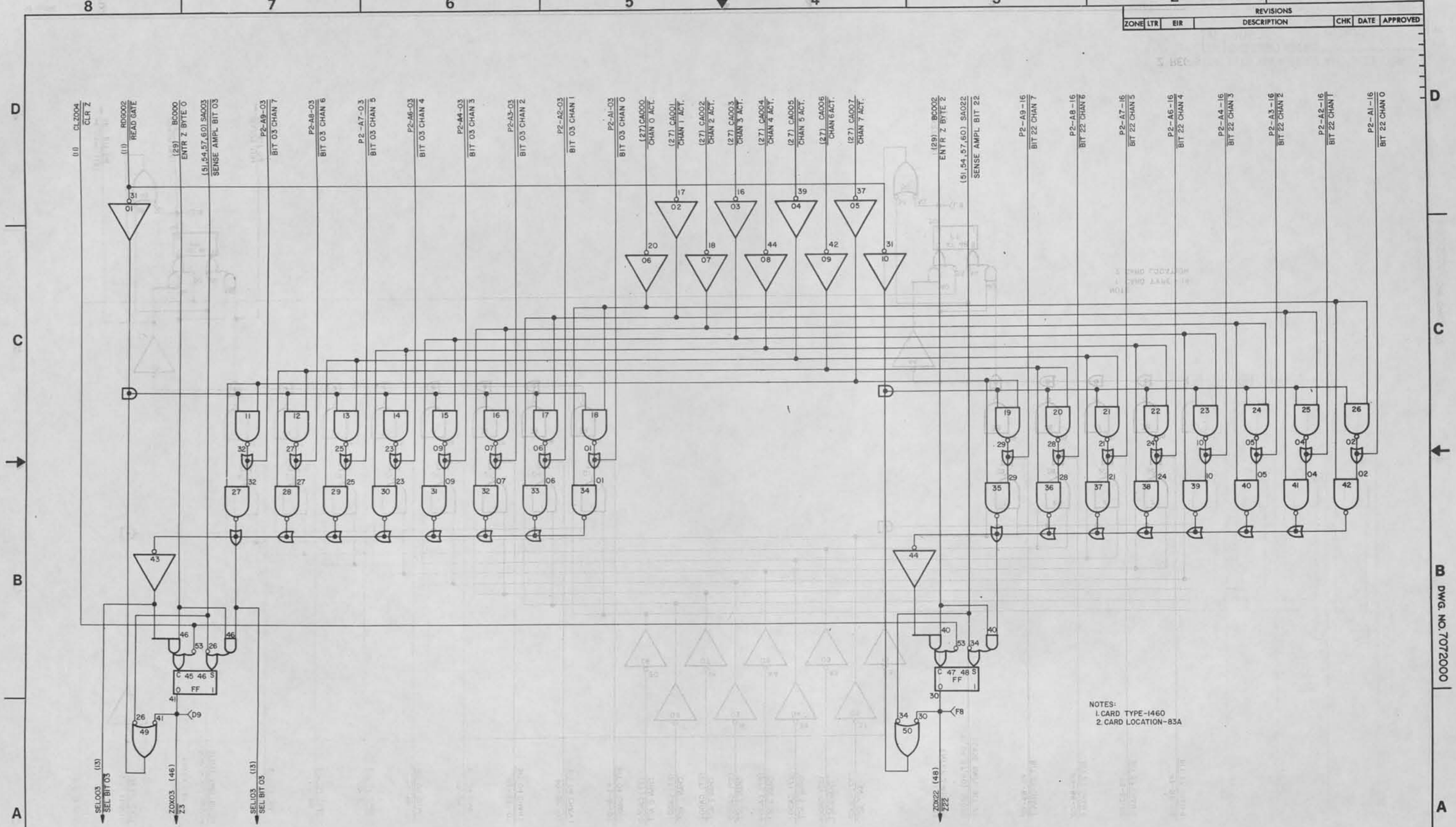

NOTES:
1. CARD TYPE-1460
2. CARD LOCATION-83A

Z REGISTER BITS 03 AND 22 AND SELECTOR

SIZE	CODE IDENT	DWG NO.
D	90536	7072000
SCALE	CLASS A	SHEET 33

DWG. NO. 7072000

UD 1-8534C

REVISIONS						
ZONE	LTR	EIR	DESCRIPTION	CHK	DATE	APPROVED

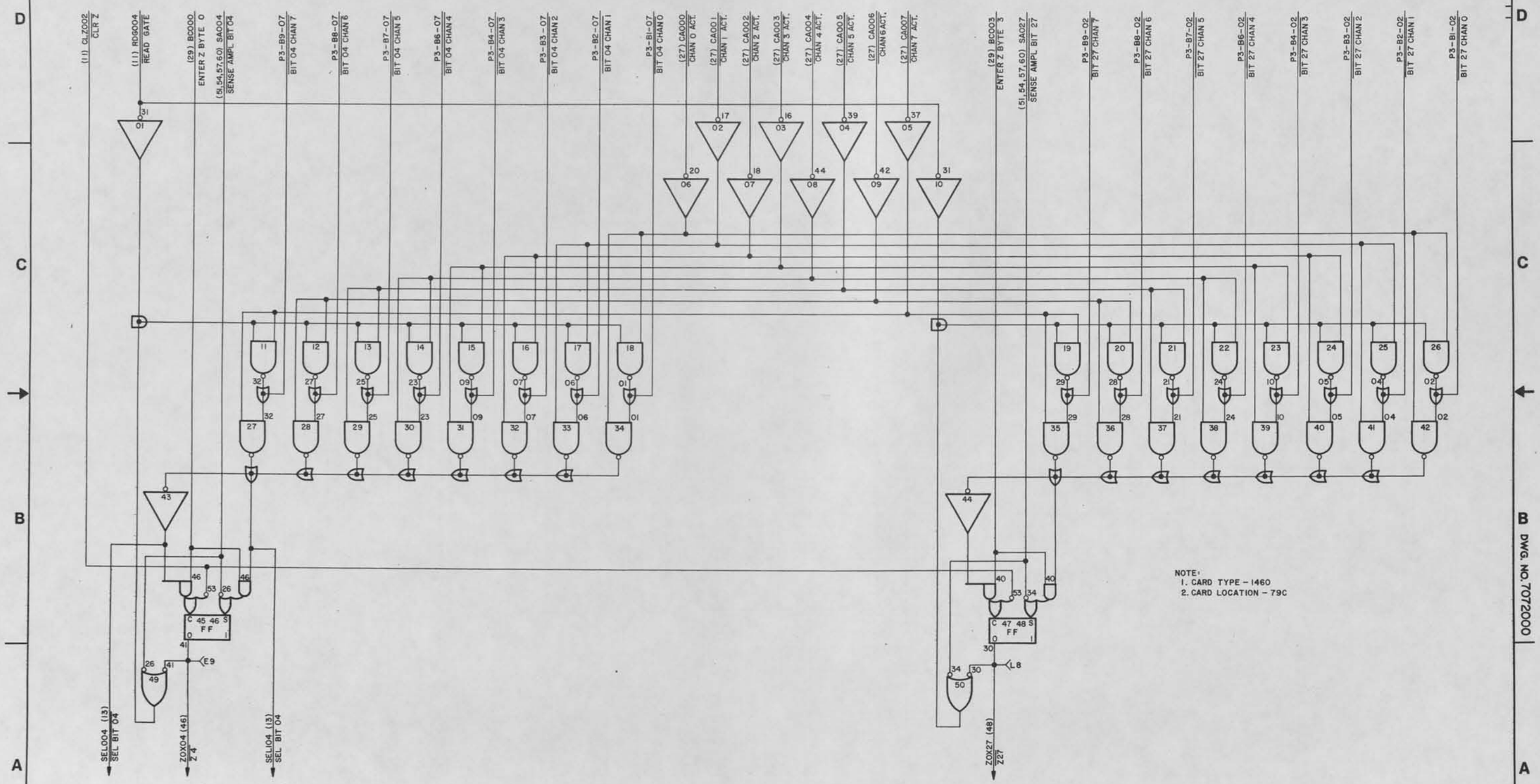

NOTE:
1. CARD TYPE – 1460
2. CARD LOCATION – 79C

DWG. NO. 7072000

Z REGISTER BITS 04 AND 27 AND SELECTOR

SIZE	CODE IDENT	DWG NO.
D	90536	7072000
SCALE	CLASS A	SHEET 34

UD 1-8534C

REVISIONS						
ZONE	LTR	EIR	DESCRIPTION	CHK	DATE	APPROVED

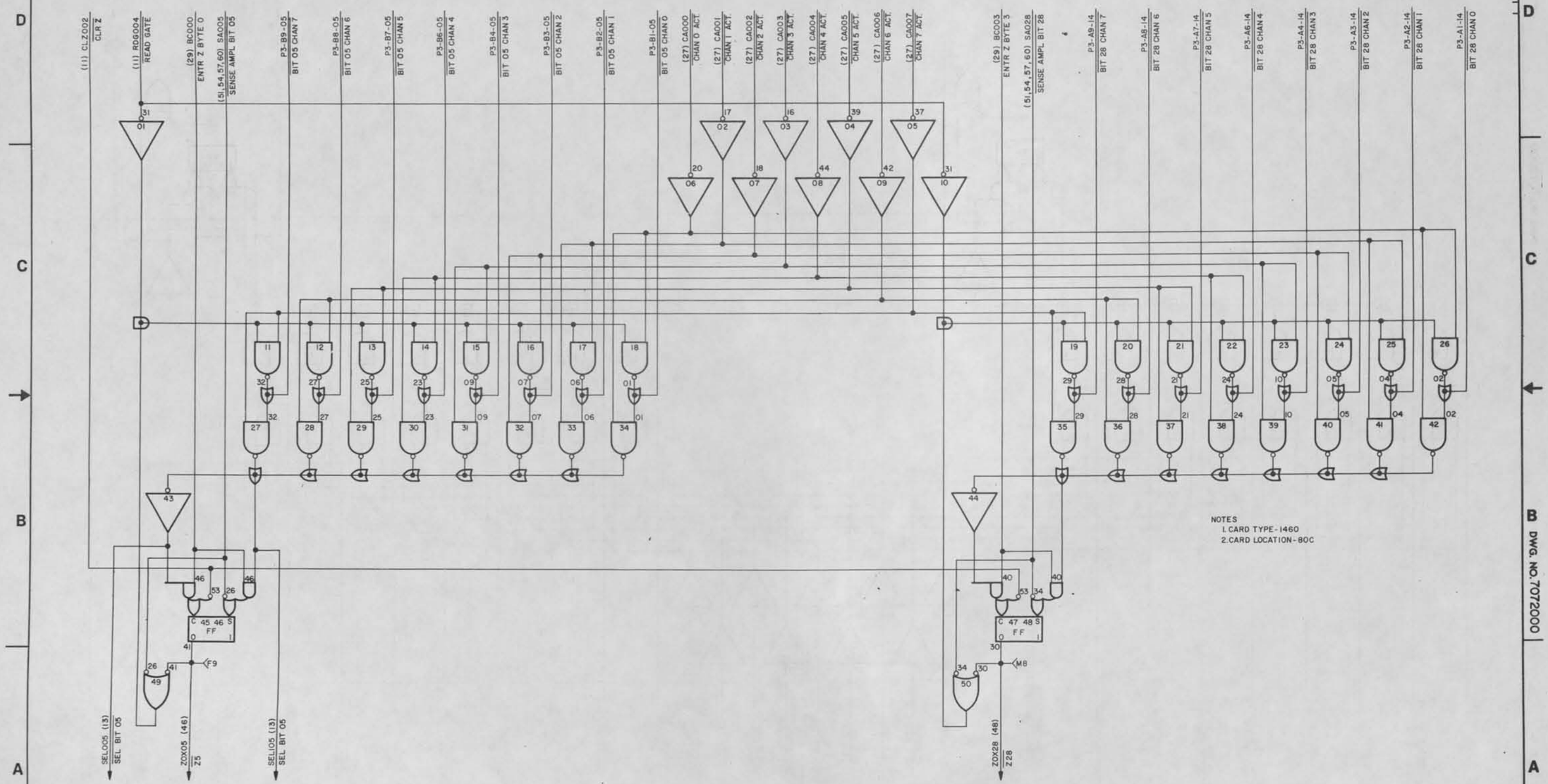

NOTES
1. CARD TYPE-1460
2. CARD LOCATION-80C

DWG. NO. 7072000

Z REGISTER BITS 05 AND 28 AND SELECTOR

SIZE	CODE IDENT	DWG NO.
D	90536	7072000
SCALE	CLASS A	SHEET 35

UD 1-2534C

REVISIONS						
ZONE	LTR	EIR	DESCRIPTION	CHK	DATE	APPROVED

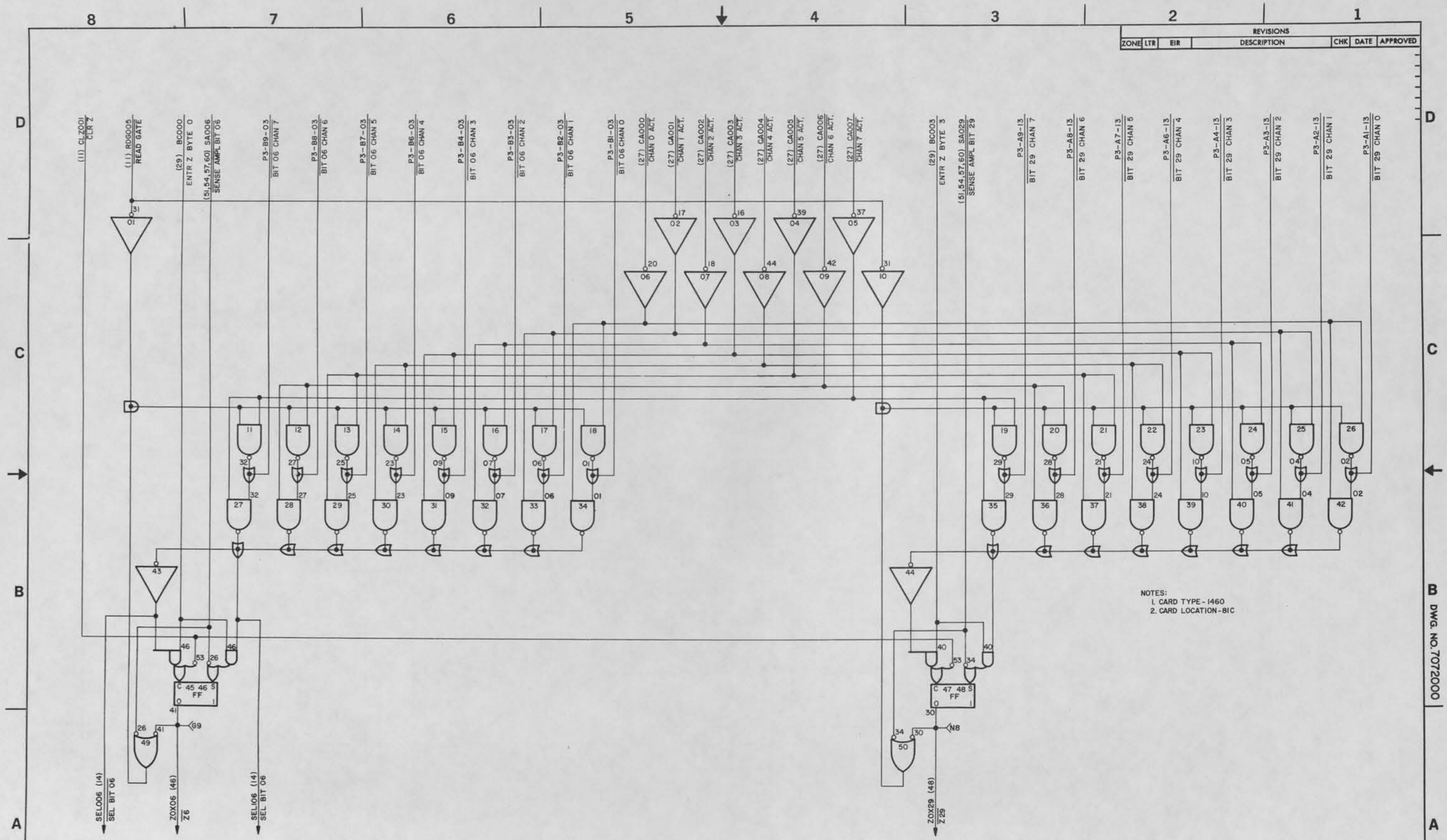

NOTES:
1. CARD TYPE - 1460
2. CARD LOCATION - 81C

DWG. NO. 7072000

Z REGISTER BITS 06 AND 29 AND SELECTOR

SIZE	CODE IDENT	DWG NO.
D	90536	7072000
SCALE	CLASS A	SHEET 36

UD 1-8534C

REVISIONS						
ZONE	LTR	EIR	DESCRIPTION	CHK	DATE	APPROVED

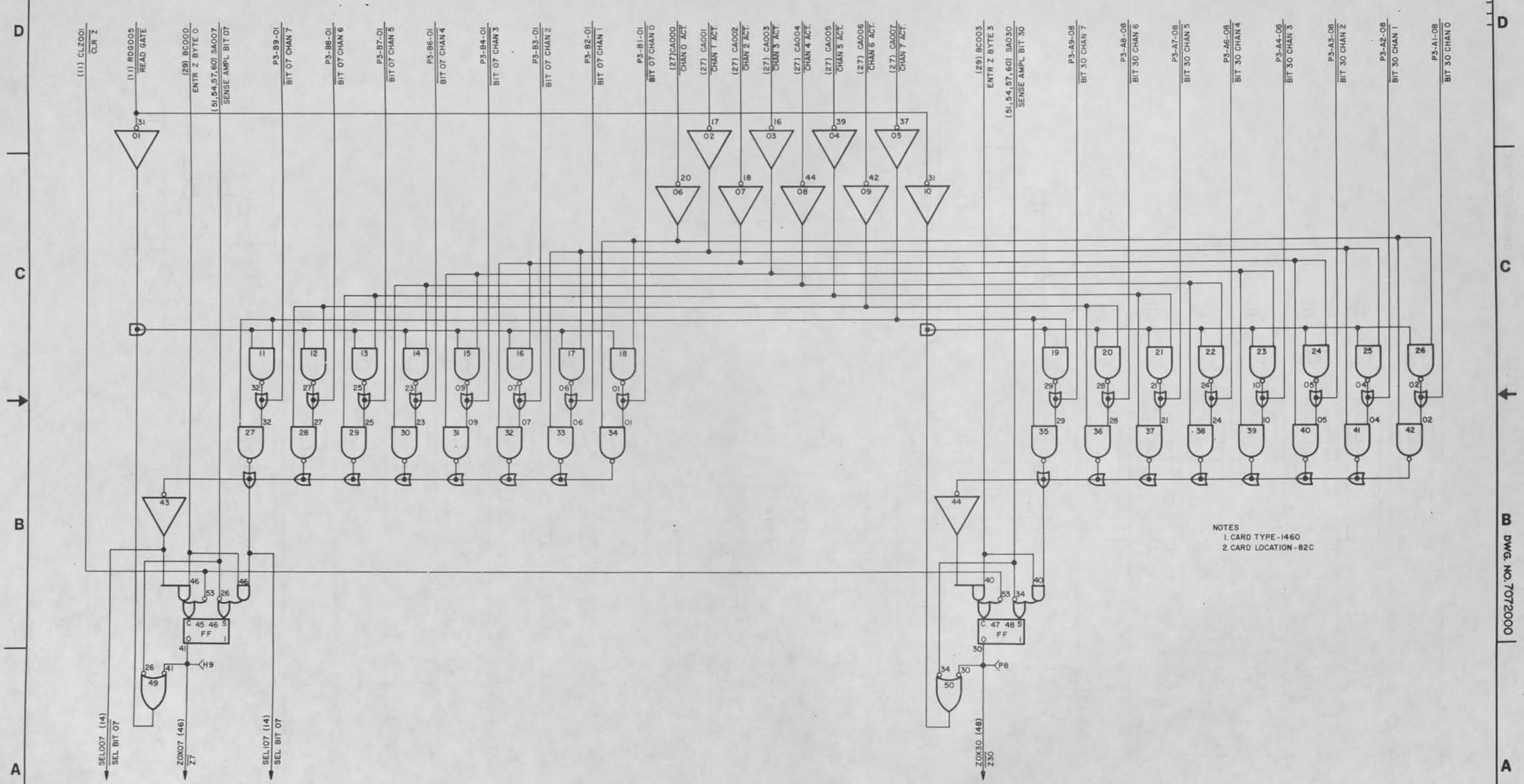

NOTES
1. CARD TYPE-1460
2. CARD LOCATION-82C

Z REGISTER BITS 07 AND 30 AND SELECTOR

SIZE	CODE IDENT	DWG NO.
D	90536	7072000
SCALE	CLASS A	SHEET 37

DWG. NO. 7072000

UD 1-8534C

REVISIONS						
ZONE	LTR	EIR	DESCRIPTION	CHK	DATE	APPROVED

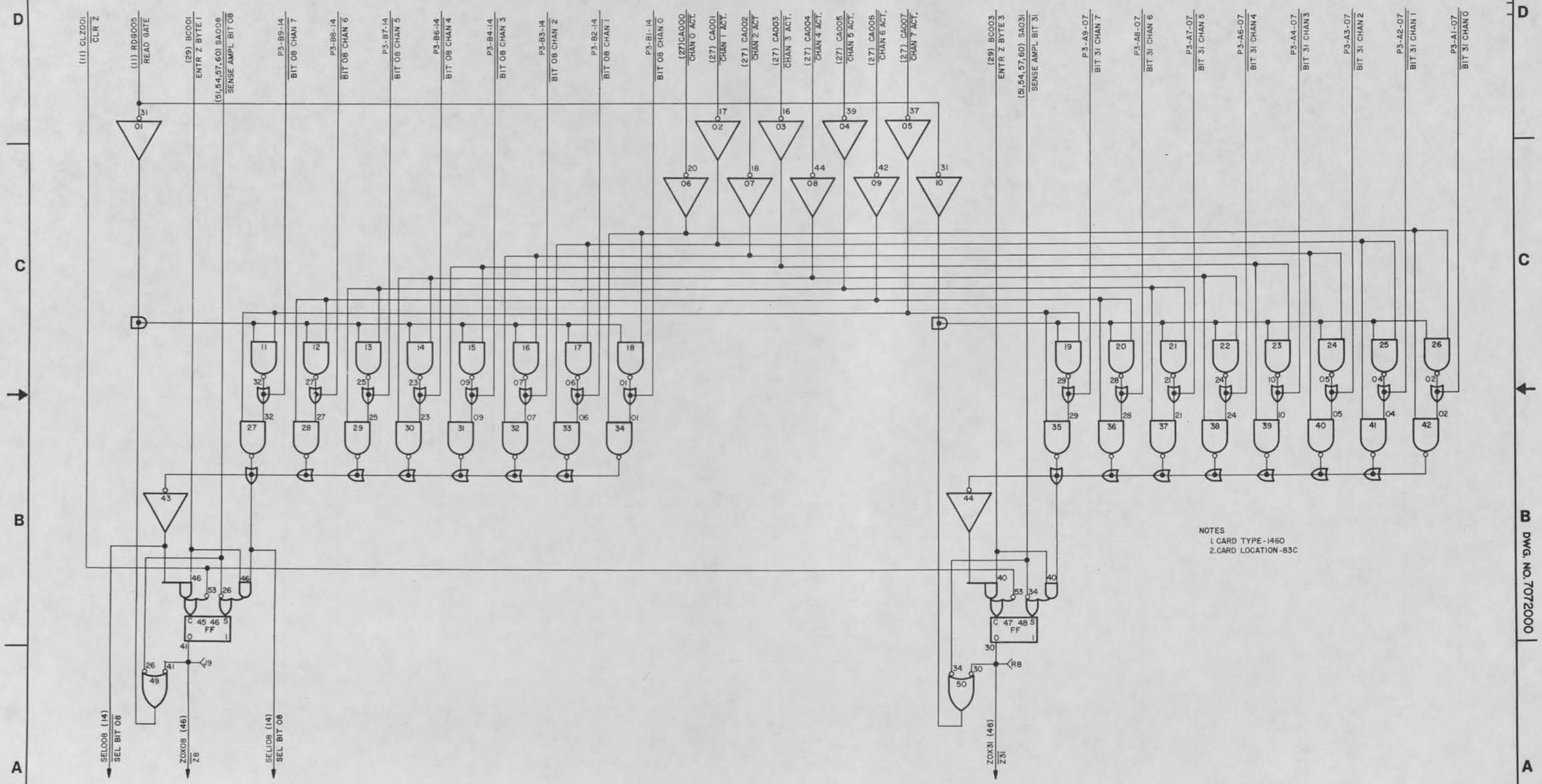

NOTES
1. CARD TYPE-1460
2. CARD LOCATION-83C

DWG. NO. 7072000

Z REGISTER BITS 08 AND 31 AND SELECTOR

SIZE	CODE IDENT	DWG NO.
D	90536	7072000
SCALE	CLASS A	SHEET 38

UD 1-8534C

REVISIONS						
ZONE	LTR	EIR	DESCRIPTION	CHK	DATE	APPROVED

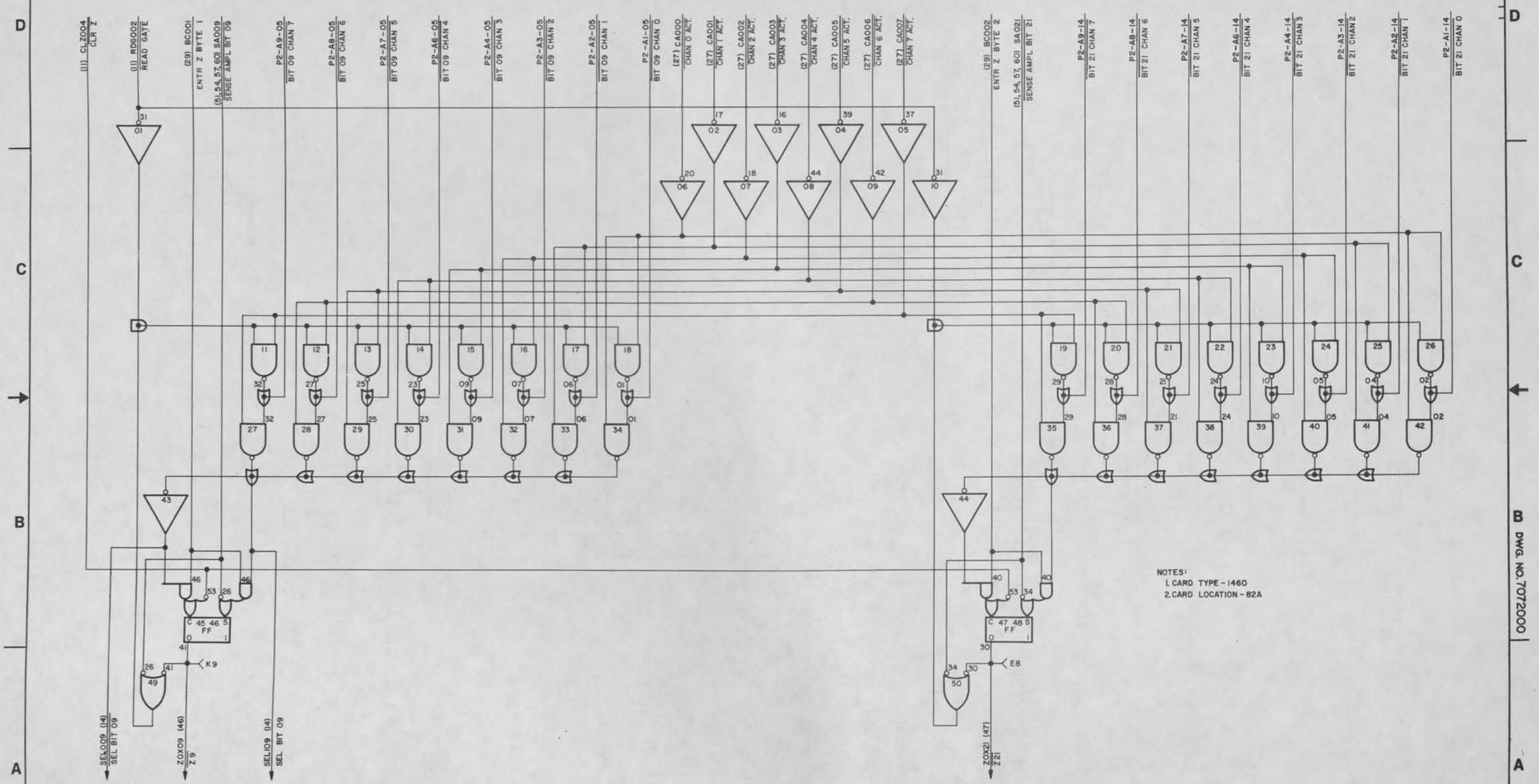

NOTES:
1. CARD TYPE - 1460
2. CARD LOCATION - 82A

Z REGISTER BITS 09 AND 21 AND SELECTOR

SIZE	CODE IDENT	DWG NO.
D	90536	7072000
SCALE	CLASS A	SHEET 39

DWG. NO. 7072000

UD 1-8534C

REVISIONS						
ZONE	LTR	EIR	DESCRIPTION	CHK	DATE	APPROVED

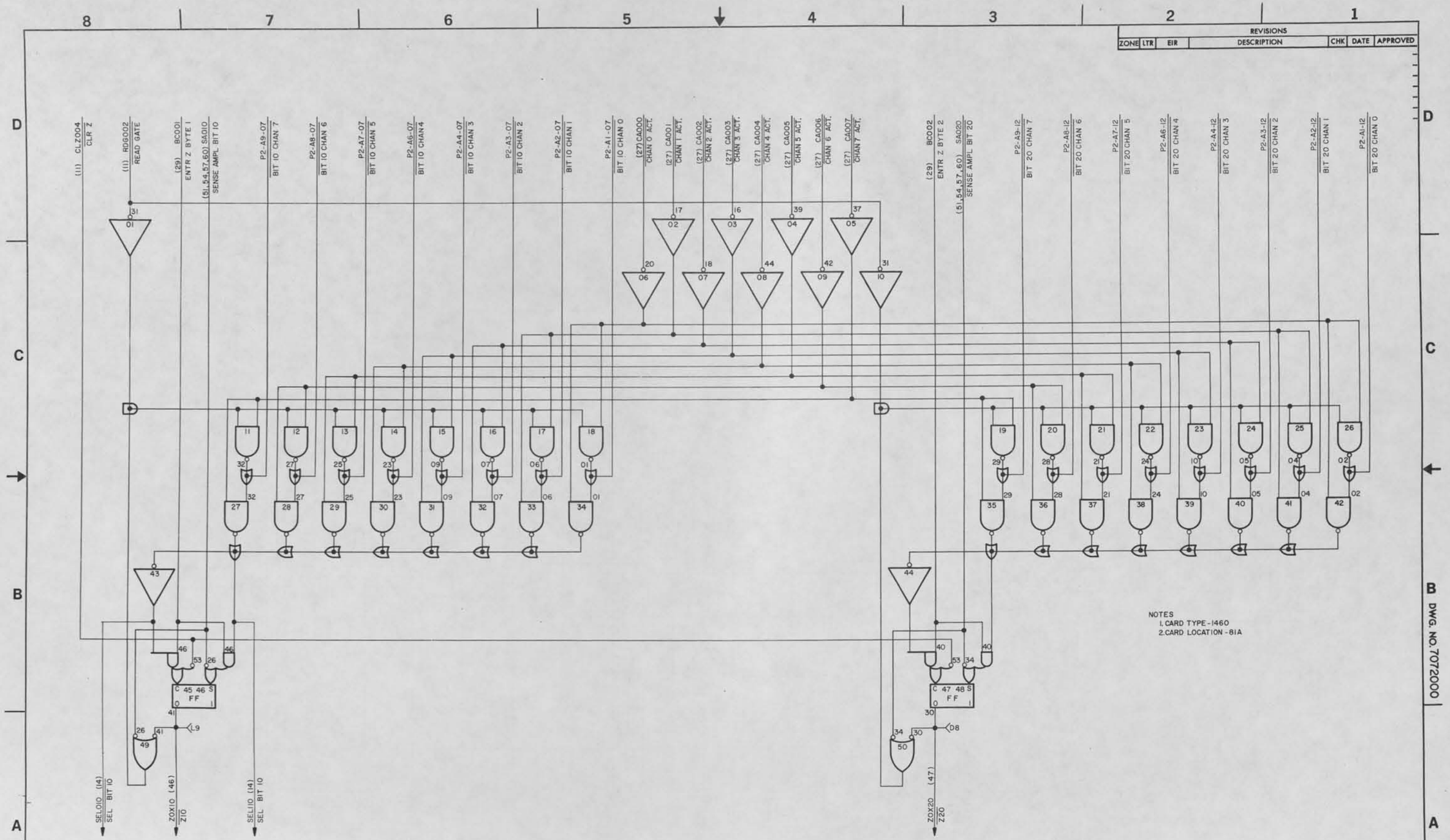

NOTES
1. CARD TYPE-1460
2. CARD LOCATION-81A

Z REGISTER BITS 10 AND 20 AND SELECTOR

SIZE	CODE IDENT	DWG NO.
D	90536	7072000
SCALE	CLASS A	SHEET 40

DWG. NO. 7072000

UD 1-8534C

REVISIONS						
ZONE	LTR	EIR	DESCRIPTION	CHK	DATE	APPROVED

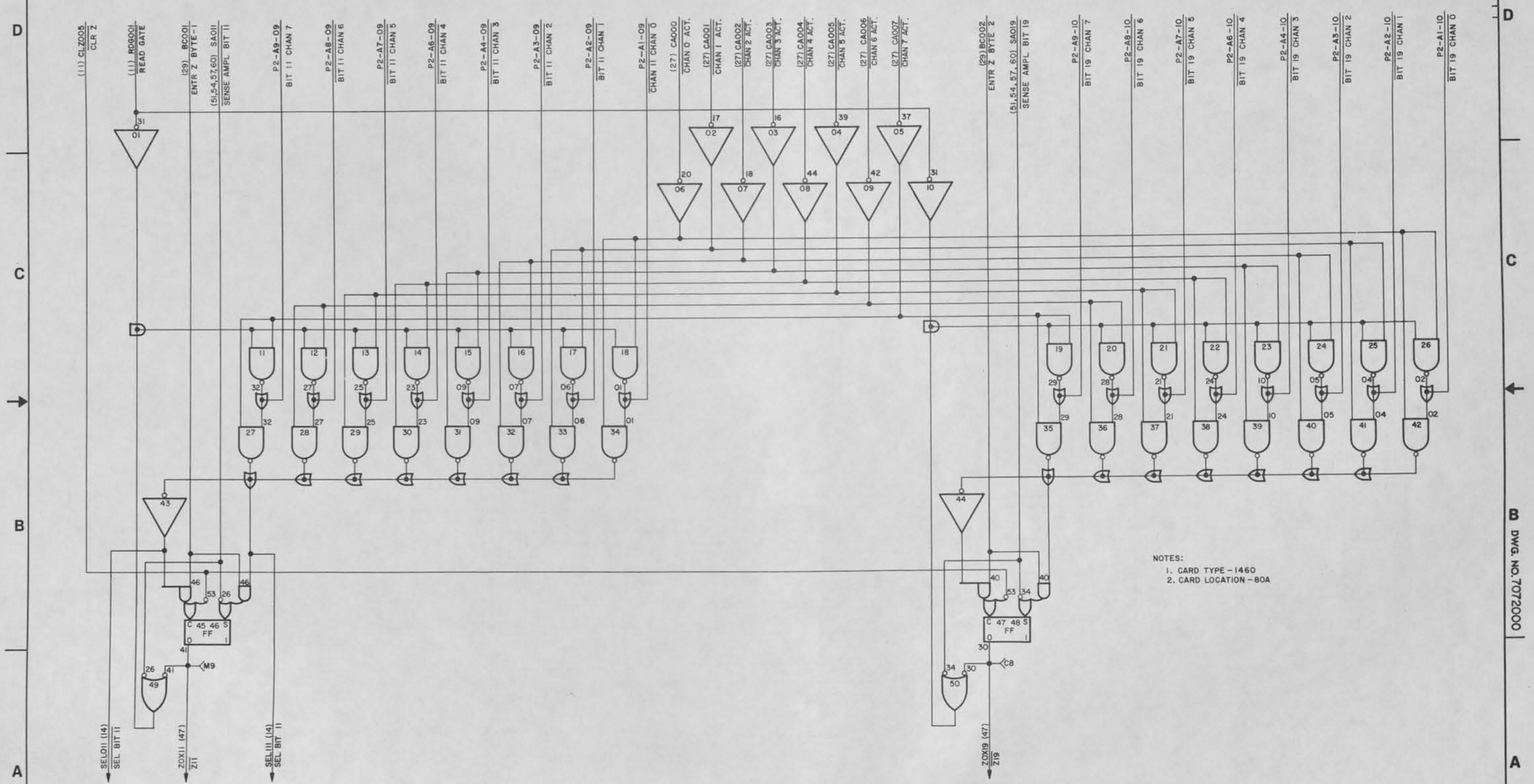

NOTES:
1. CARD TYPE - 1460
2. CARD LOCATION - 80A

Z REGISTER BITS 11 AND 19 AND SELECTOR

SIZE	CODE IDENT	DWG NO.
D	90536	7072000
SCALE	CLASS A	SHEET 41

DWG. NO. 7072000

UD 1-2534C

REVISIONS						
ZONE	LTR	EIR	DESCRIPTION	CHK	DATE	APPROVED

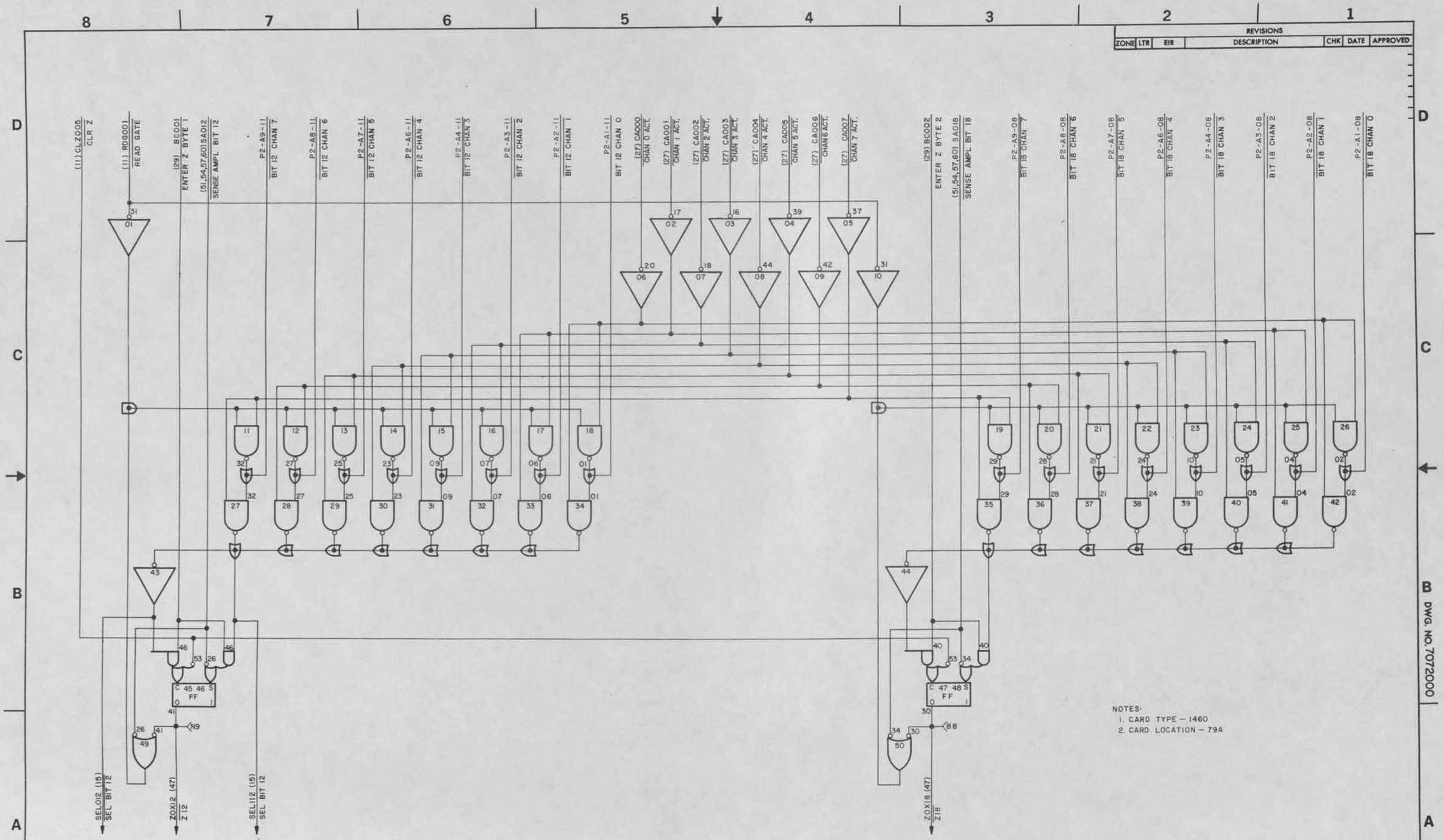

NOTES:
1. CARD TYPE – 1460
2. CARD LOCATION – 79A

Z REGISTER BITS 12 AND 18 AND SELECTOR

SIZE	CODE IDENT	DWG NO.
D	90536	7072000
SCALE	CLASS A	SHEET 42

DWG. NO. 7072000

UD 1-8534C

REVISIONS					
ZONE	LTR	EIR	DESCRIPTION	CHK	DATE	APPROVED

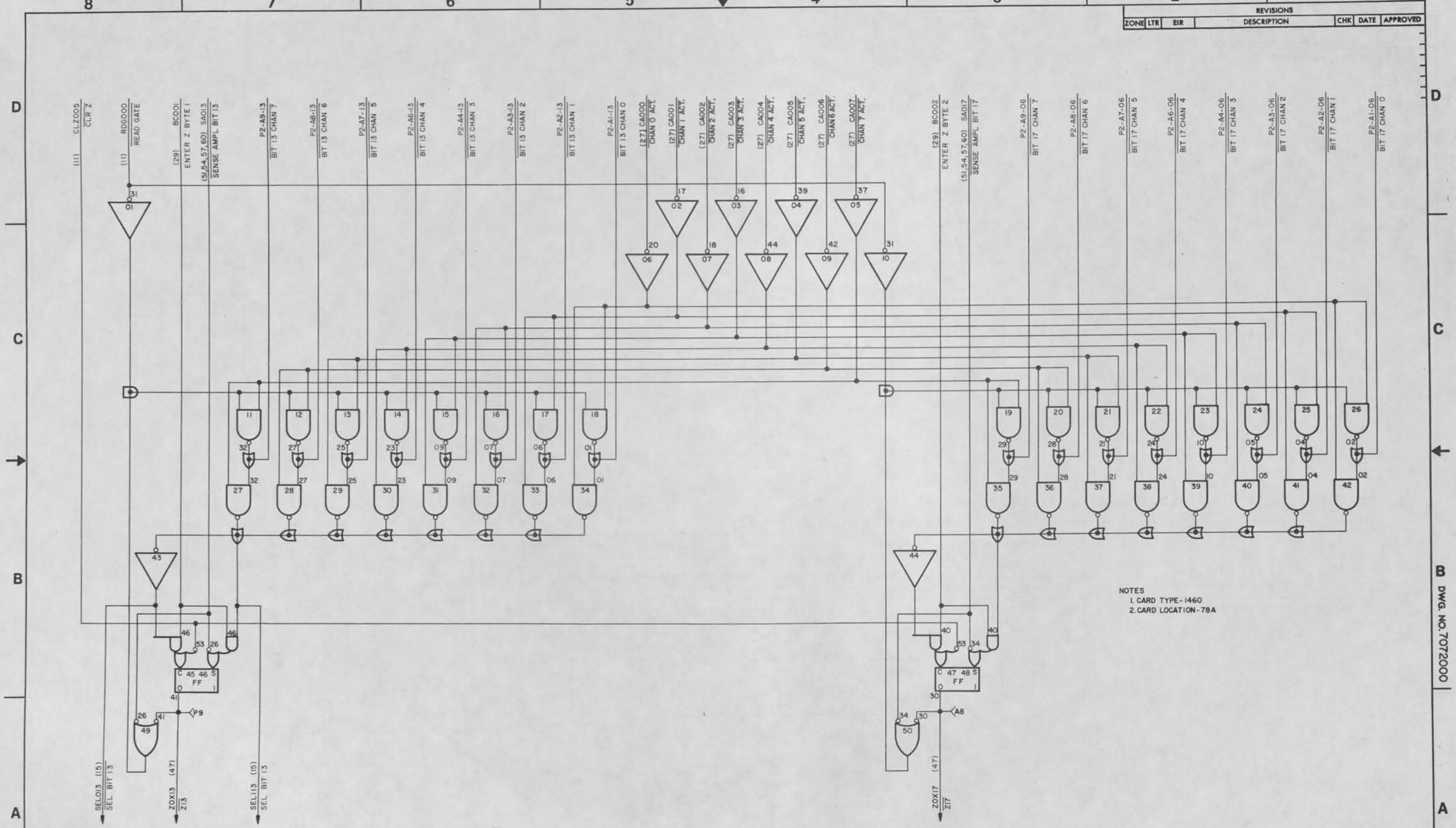

NOTES
1. CARD TYPE-1460
2. CARD LOCATION-78A

Z REGISTER BITS 13 AND 17 AND SELECTOR

SIZE	CODE IDENT	DWG NO.
D	90536	7072000
SCALE	CLASS A	SHEET 43

DWG. NO. 7072000

UD 1-8534C

REVISIONS						
ZONE	LTR	EIR	DESCRIPTION	CHK	DATE	APPROVED

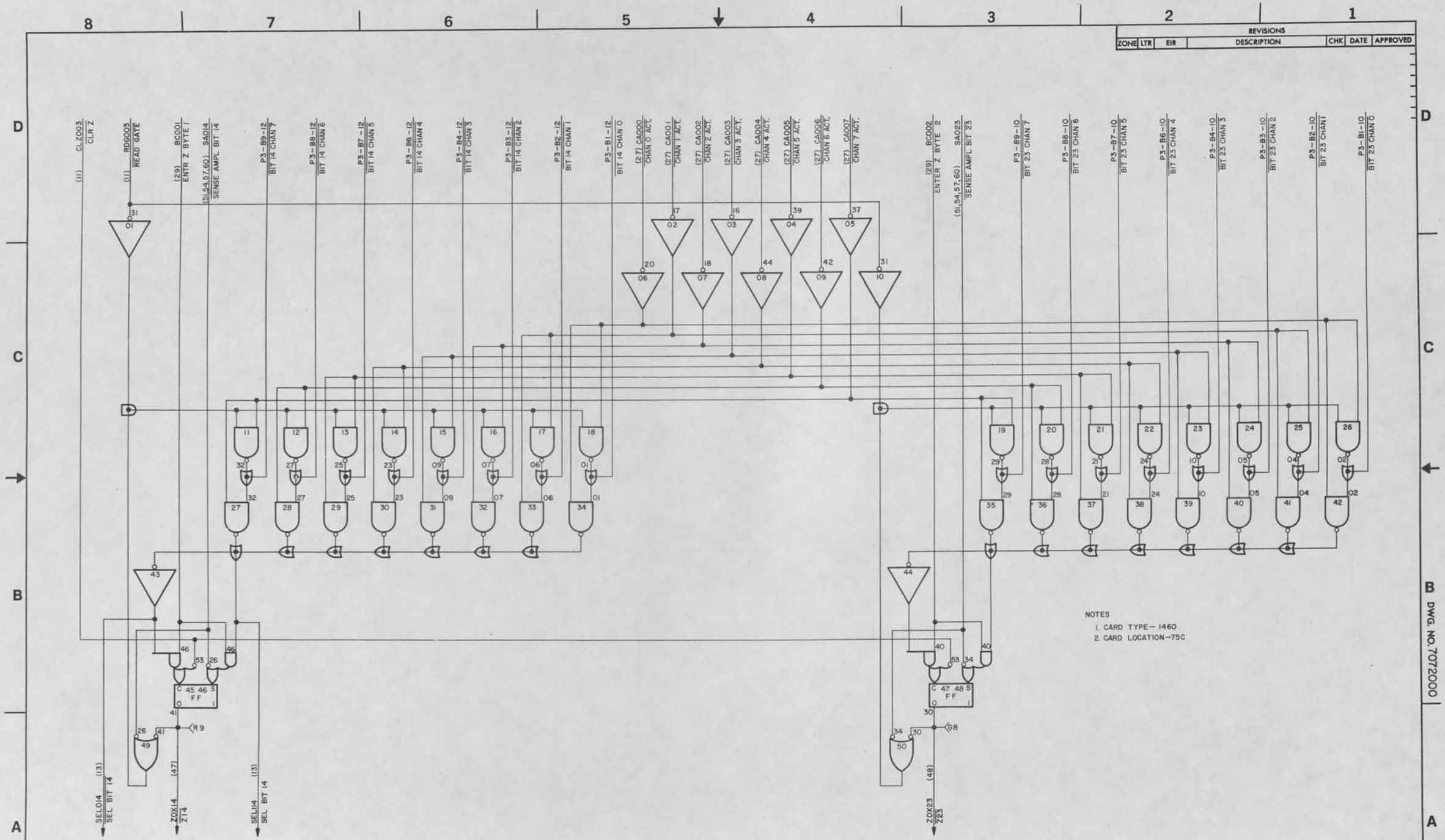

NOTES
1. CARD TYPE— 1460
2. CARD LOCATION—75C

DWG. NO. 7072000

Z REGISTER BITS 14 AND 23 AND SELECTOR

SIZE	CODE IDENT	DWG NO.
D	90536	7072000
SCALE	CLASS A	SHEET 44

UD 1-8534C

REVISIONS						
ZONE	LTR	EIR	DESCRIPTION	CHK	DATE	APPROVED

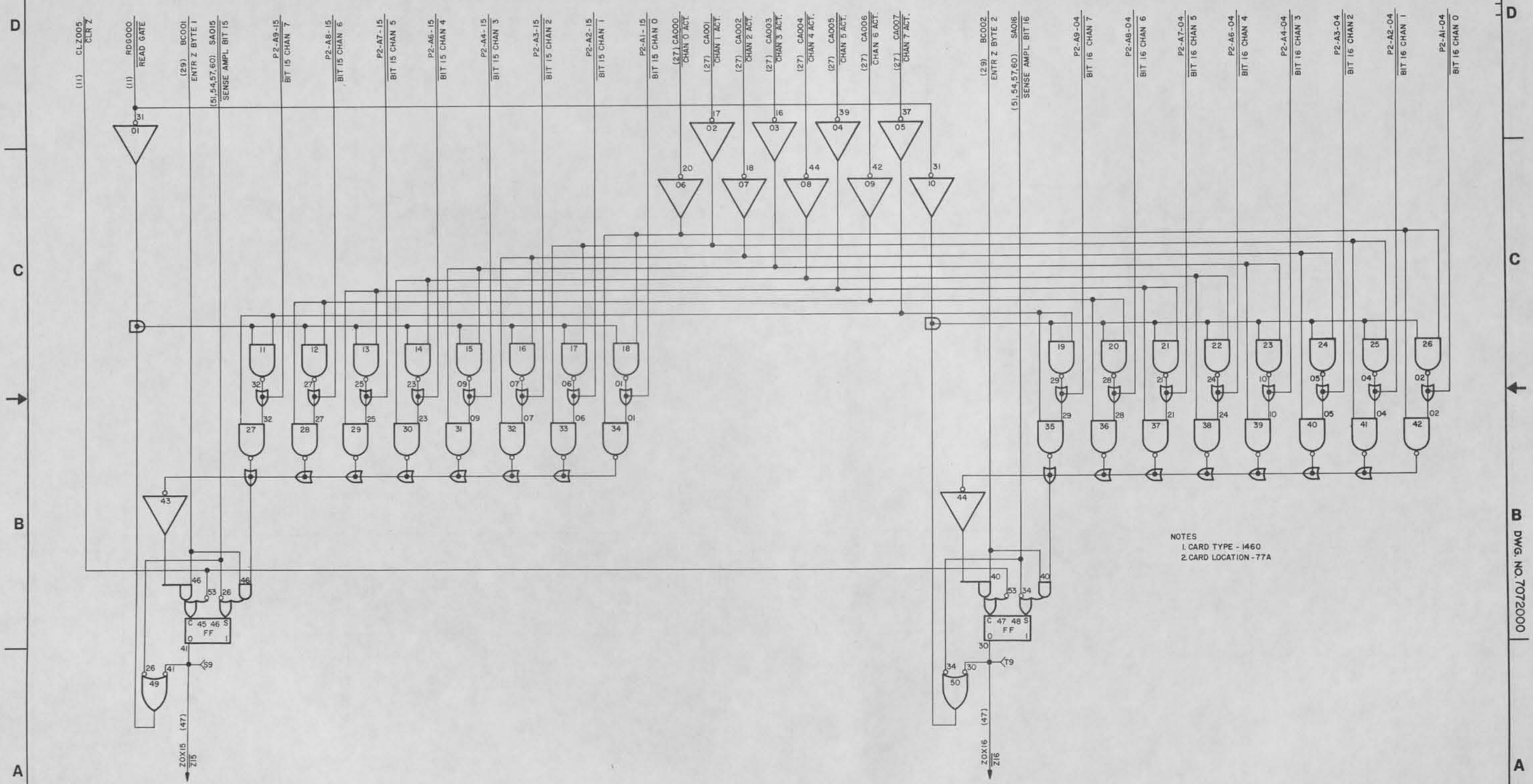

NOTES
1. CARD TYPE - 1460
2. CARD LOCATION - 77A

DWG. NO. 7072000

Z REGISTER BITS 15 AND 16 AND SELECTOR

SIZE	CODE IDENT	DWG NO.
D	90536	7072000
SCALE	CLASS A	SHEET 45

UD 1-8534C

REVISIONS						
ZONE	LTR	EIR	DESCRIPTION	CHK	DATE	APPROVED

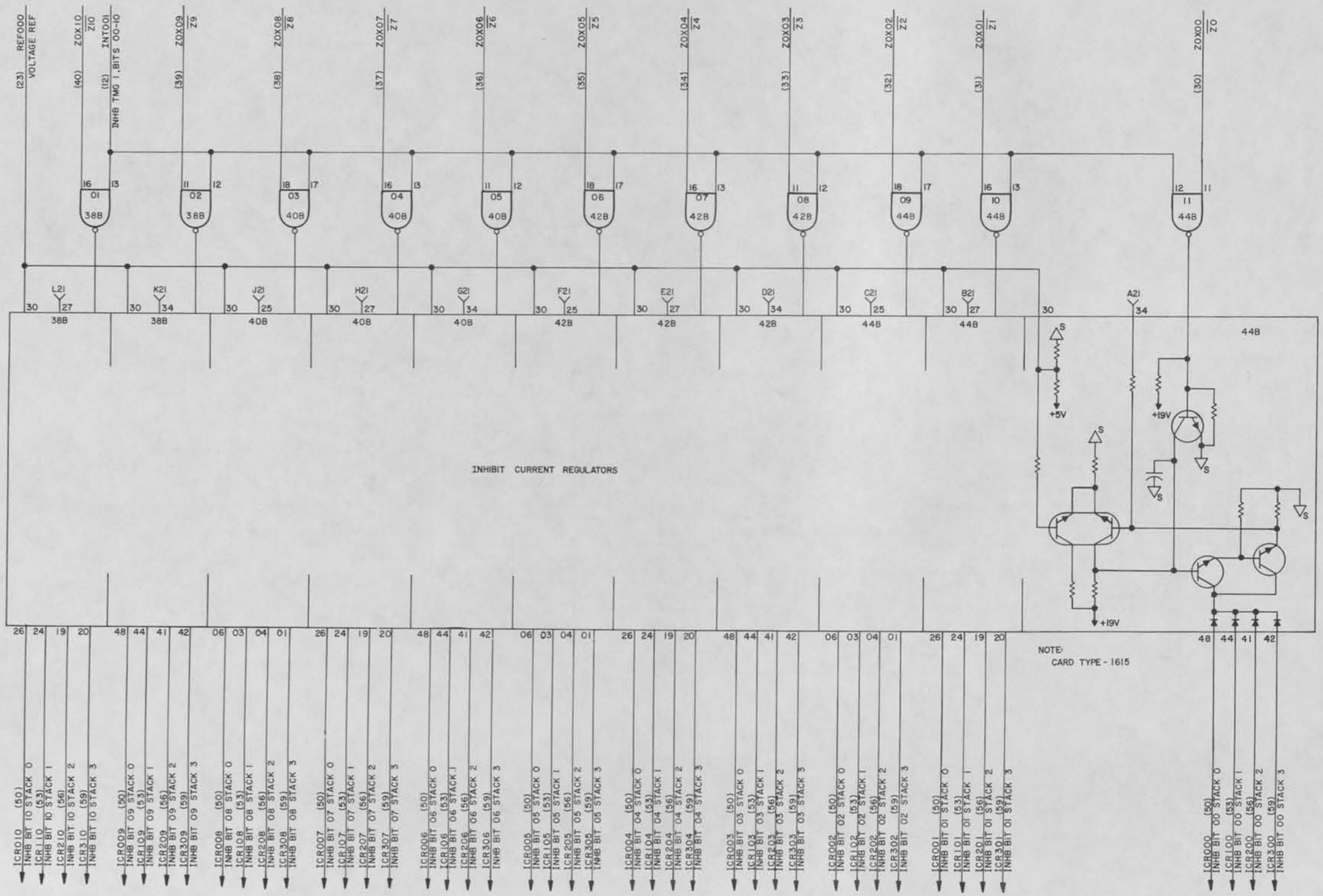

INHIBIT CURRENT REGULATORS, BITS 00-10

SIZE	CODE IDENT	DWG NO.
D	90536	7072000
SCALE	CLASS A	SHEET 46

DWG. NO. 7072000

UD 1-8534C

REVISIONS						
ZONE	LTR	EIR	DESCRIPTION	CHK	DATE	APPROVED

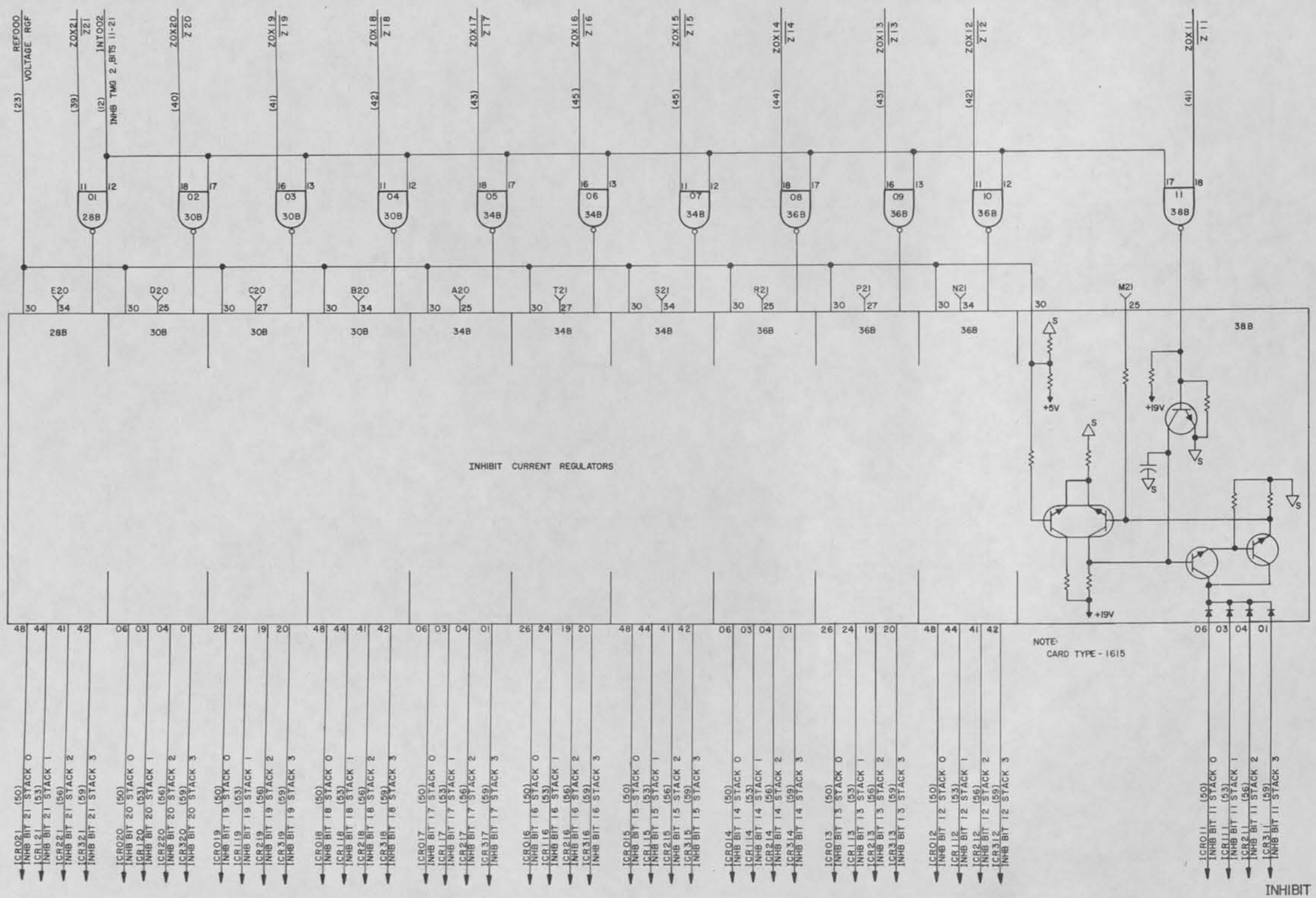

INHIBIT CURRENT REGULATORS, BITS 11 TO 21

SIZE	CODE IDENT	DWG NO.
D	90536	7072000
SCALE	CLASS A	SHEET 47

DWG. NO. 7072000

UD 1-2534C

REVISIONS						
ZONE	LTR	EIR	DESCRIPTION	CHK	DATE	APPROVED

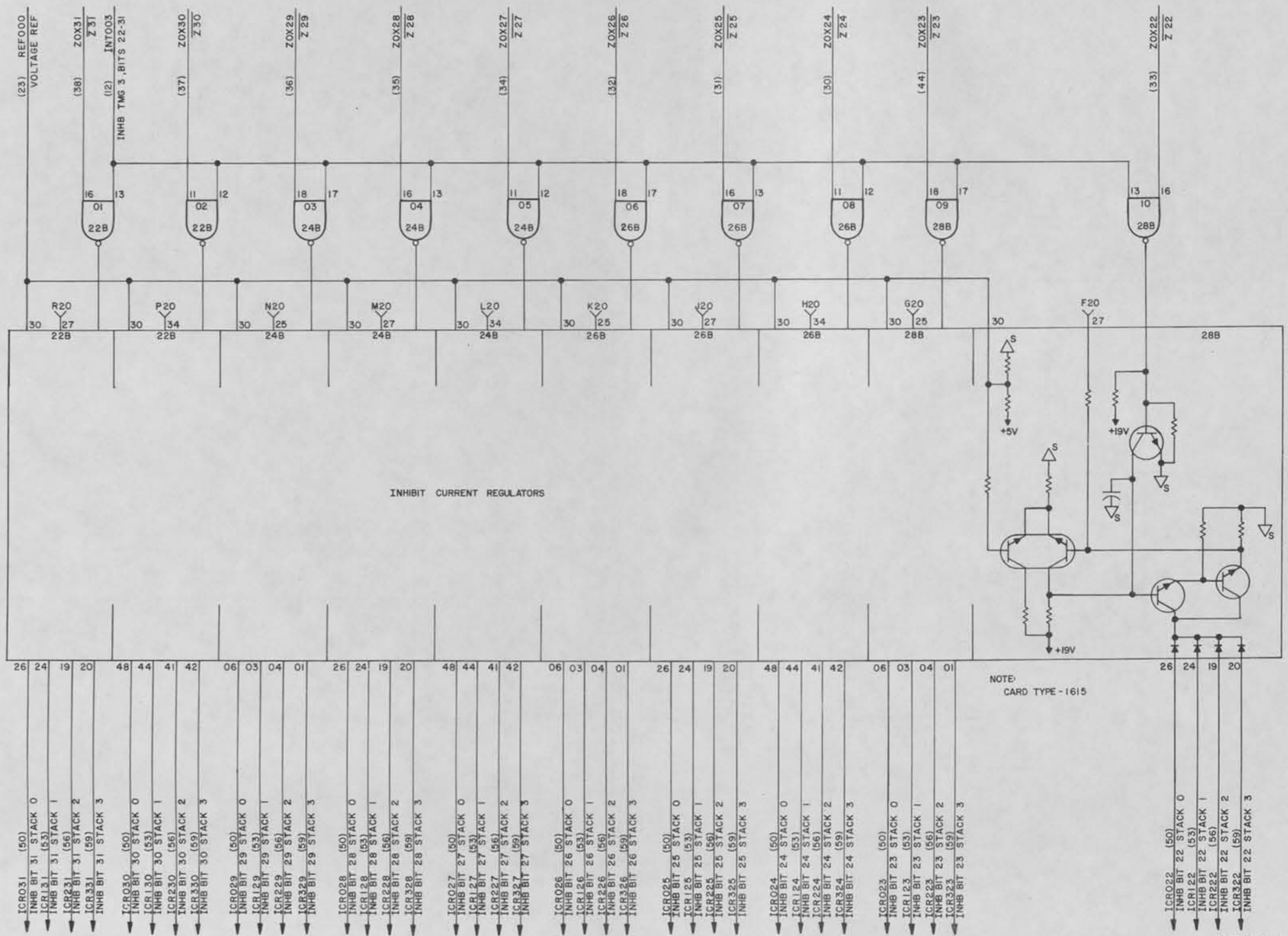

INHIBIT CURRENT REGULATORS, BITS 22 TO 31

SIZE	CODE IDENT	DWG NO.
D	90536	7072000
SCALE	CLASS A	SHEET 48

DWG. NO. 7072000

UD 1-8534C

REVISIONS						
ZONE	LTR	EIR	DESCRIPTION	CHK	DATE	APPROVED

NOTE:
CARD TYPE – 1620

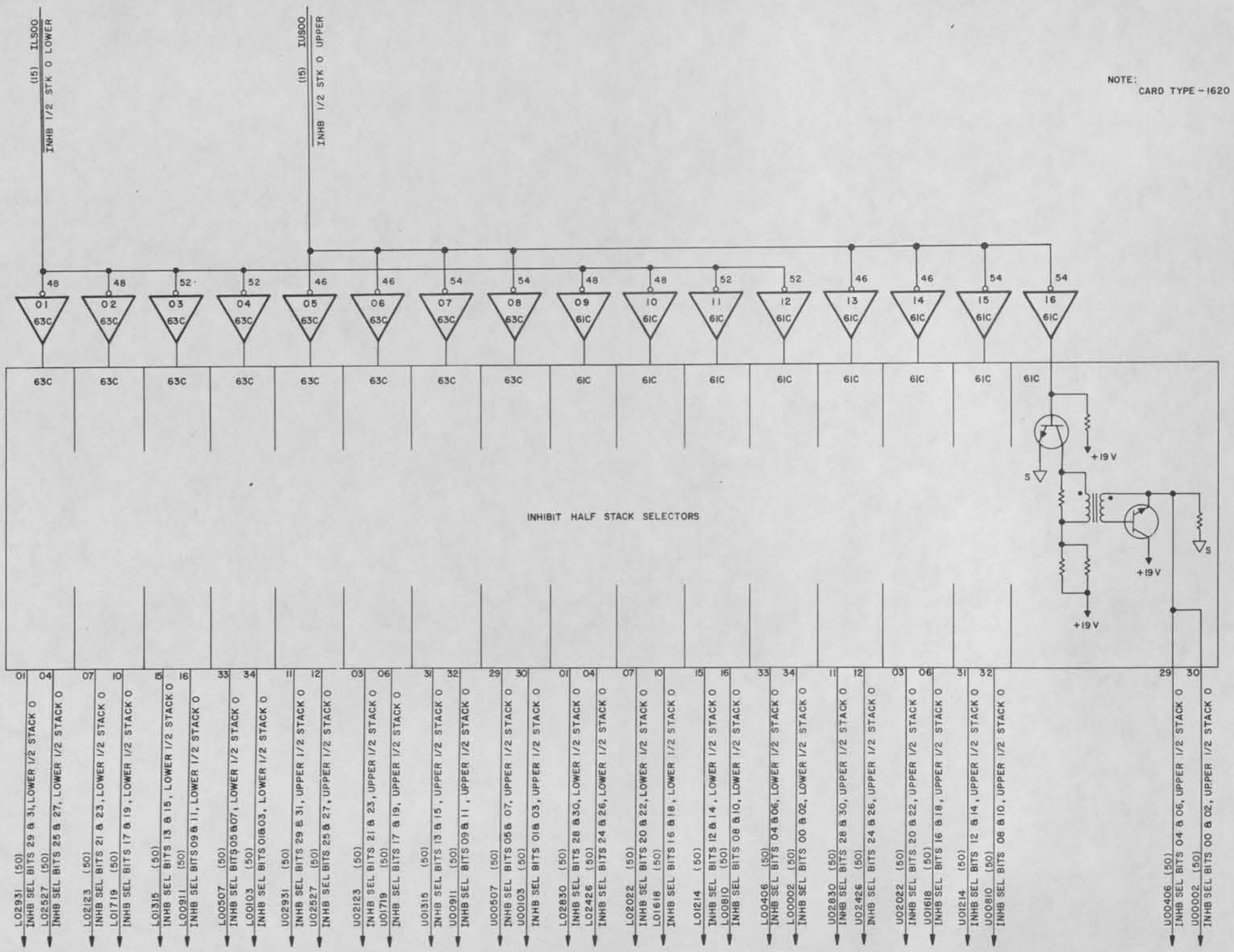

INHIBIT HALF STACK SELECTORS, STACK 0

SIZE	CODE IDENT	DWG NO.
D	90536	7072000
SCALE	CLASS A	SHEET 49

DWG. NO. 7072000

UD 1-8534C

ZONE	LTR	EIR	REVISIONS DESCRIPTION	CHK	DATE	APPROVED

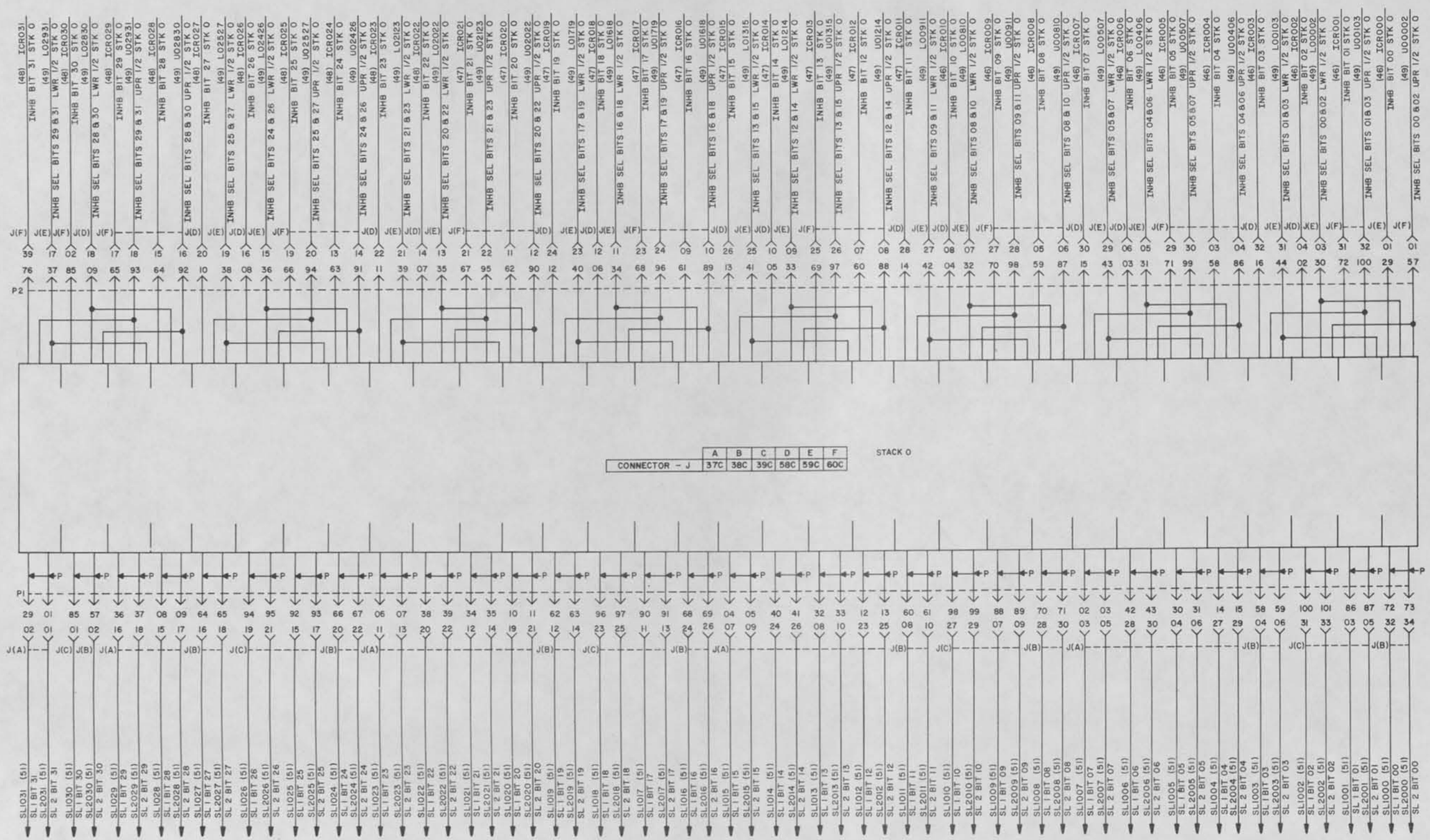

SENSE & INHIBIT LINES, STACK 0

SIZE	CODE IDENT	DWG NO.
D	90536	7072000
SCALE	CLASS A	SHEET 50

DWG. NO. 7072000

UD 1-8534C

REVISIONS						
ZONE	LTR	EIR	DESCRIPTION	CHK	DATE	APPROVED
	B	D03855	SEE EIR	D.T	5-10-71	[illegible]

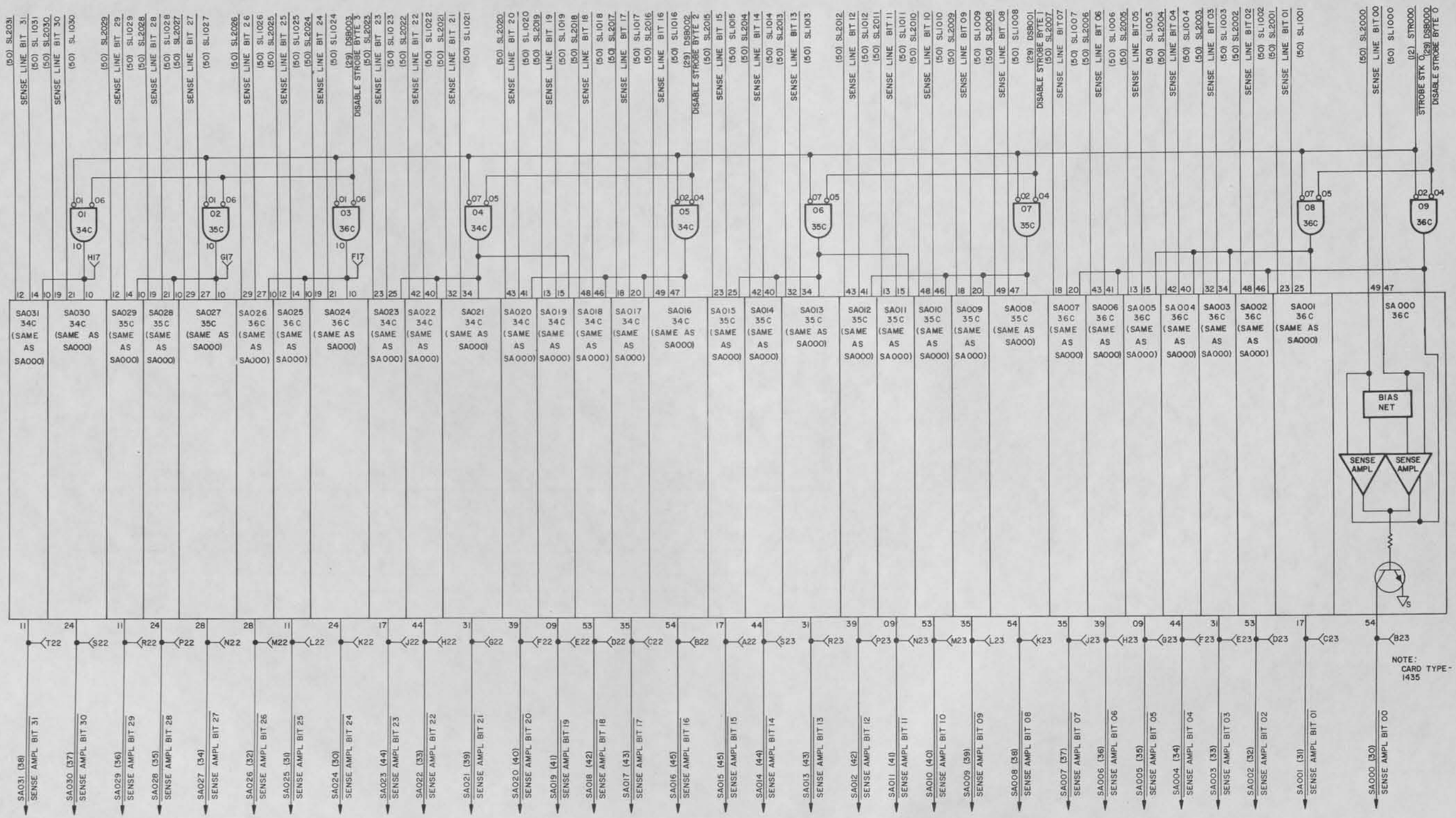

SENSE AMPLIFIERS, STACK 0, BITS 00-31

SIZE	CODE IDENT	DWG NO.
D	90536	7072000
SCALE	CLASS A	SHEET 5

DWG. NO. 7072000

UD 1-2534C

M22

REVISIONS						
ZONE	LTR	EIR	DESCRIPTION	CHK	DATE	APPROVED

NOTE:
CARD TYPE – 1620

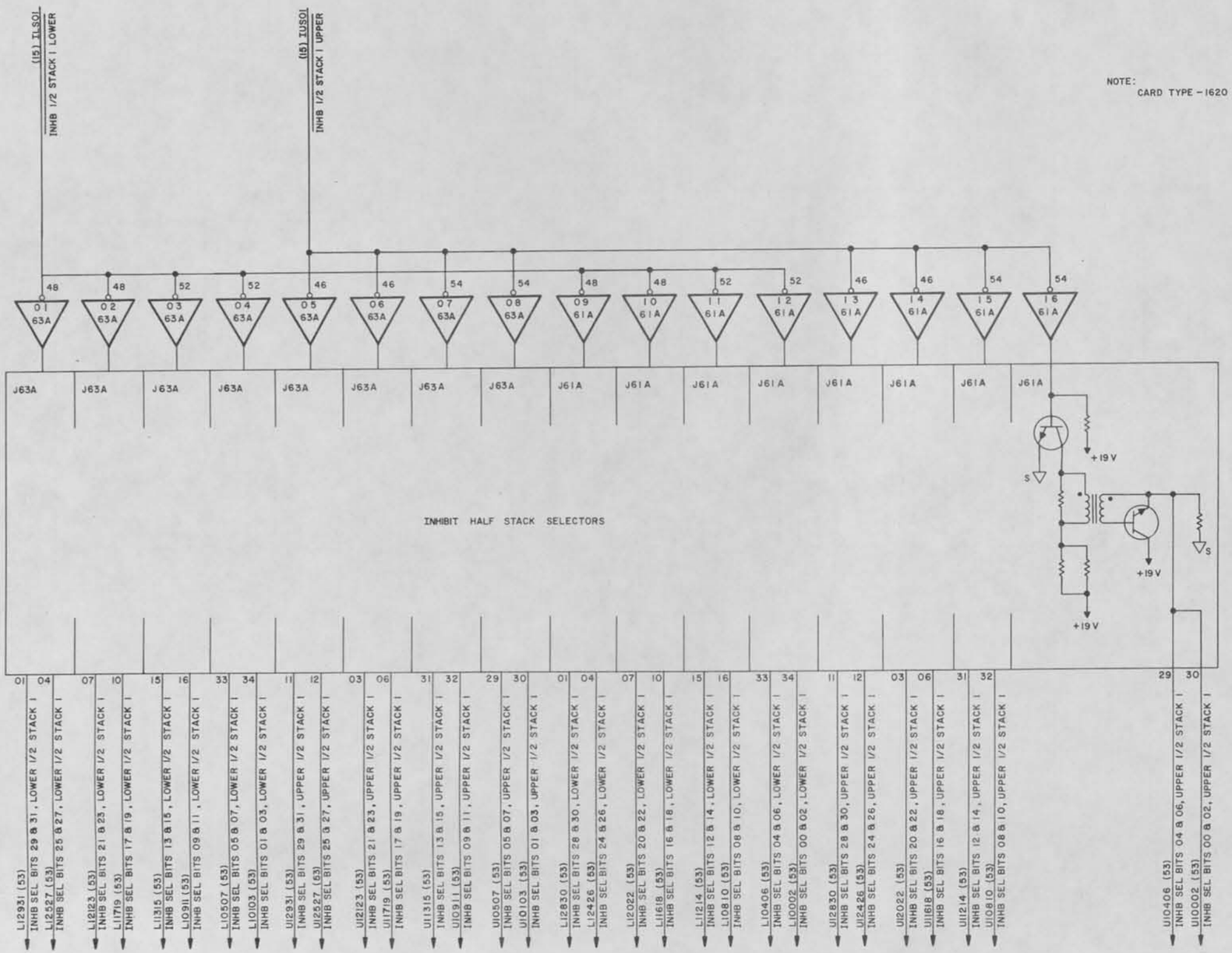

INHIBIT HALF STACK SELECTORS, STACK 1

SIZE	CODE IDENT	DWG NO.
D	90536	7072000
SCALE	CLASS A	SHEET 52

DWG. NO. 7072000

UD 1-2534C

ZONE	LTR	EIR	REVISIONS DESCRIPTION	CHK	DATE	APPROVED

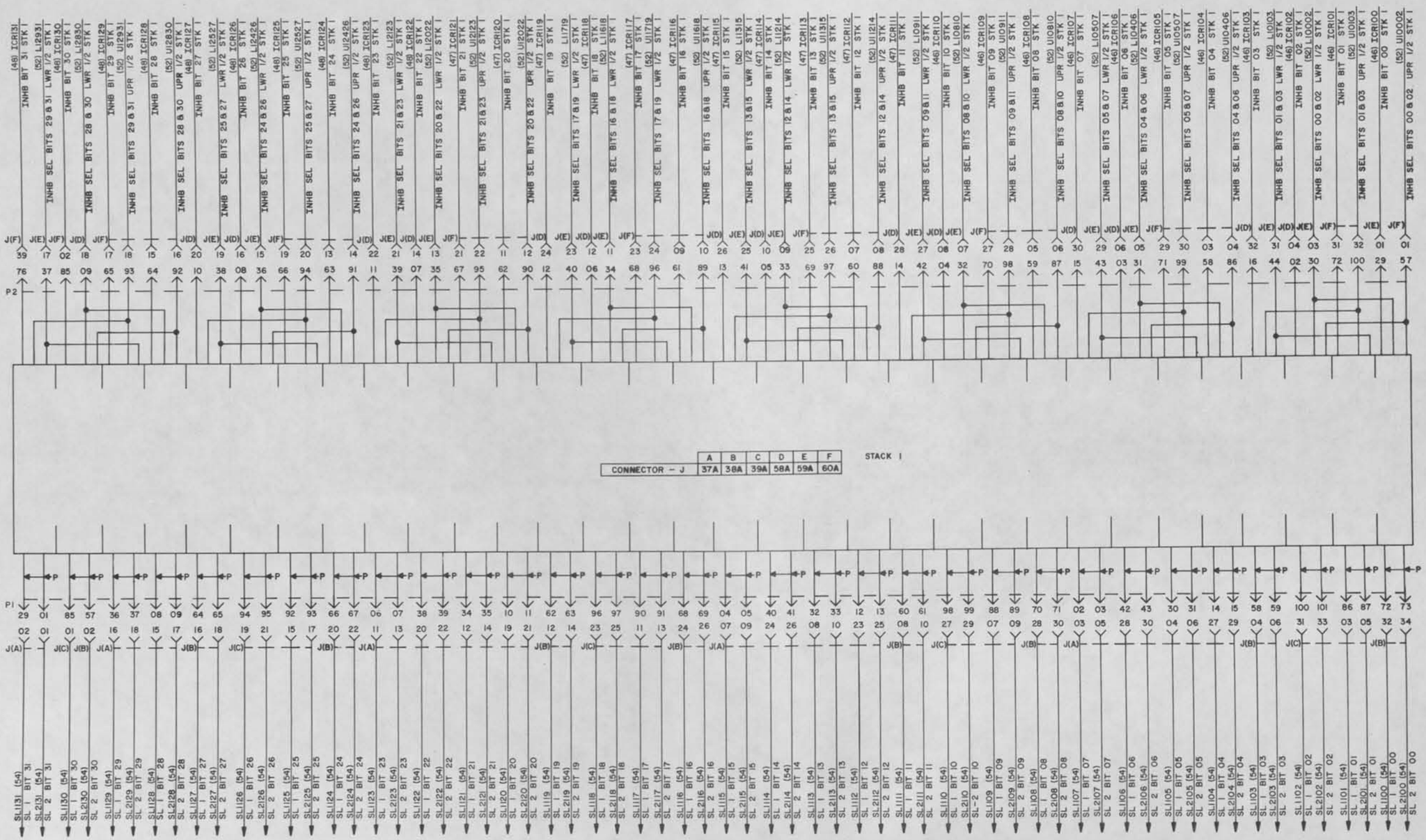

SENSE & INHIBIT LINES, STACK I

SIZE	CODE IDENT	DWG NO.
D	90536	7072000
SCALE	CLASS A	SHEET 53

DWG. NO. 7072000

UD 1-8534C

REVISIONS						
ZONE	LTR	EIR	DESCRIPTION	CHK	DATE	APPROVED
	B	D03855	SEE EIR	DJS	5-10-71	[illegible]

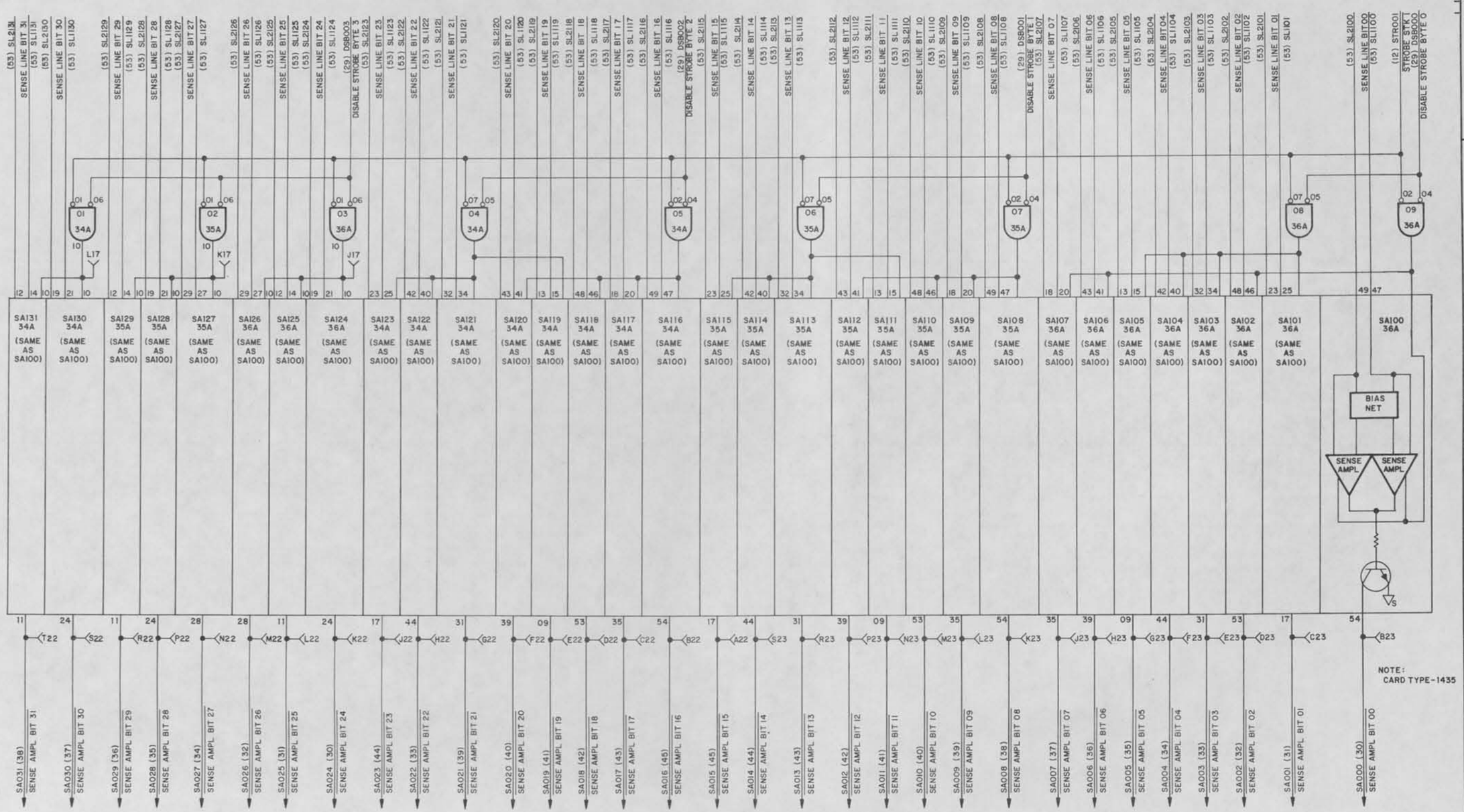

NOTE:
CARD TYPE-1435

SENSE AMPLIFIERS, STACK I, BITS 00-31

SIZE	CODE IDENT	DWG NO.
D	90536	7072000
SCALE	CLASS A	SHEET 54

DWG. NO. 7072000

UD 1-8534C

REVISIONS						
ZONE	LTR	EIR	DESCRIPTION	CHK	DATE	APPROVED

NOTE:
CARD TYPE - 1620

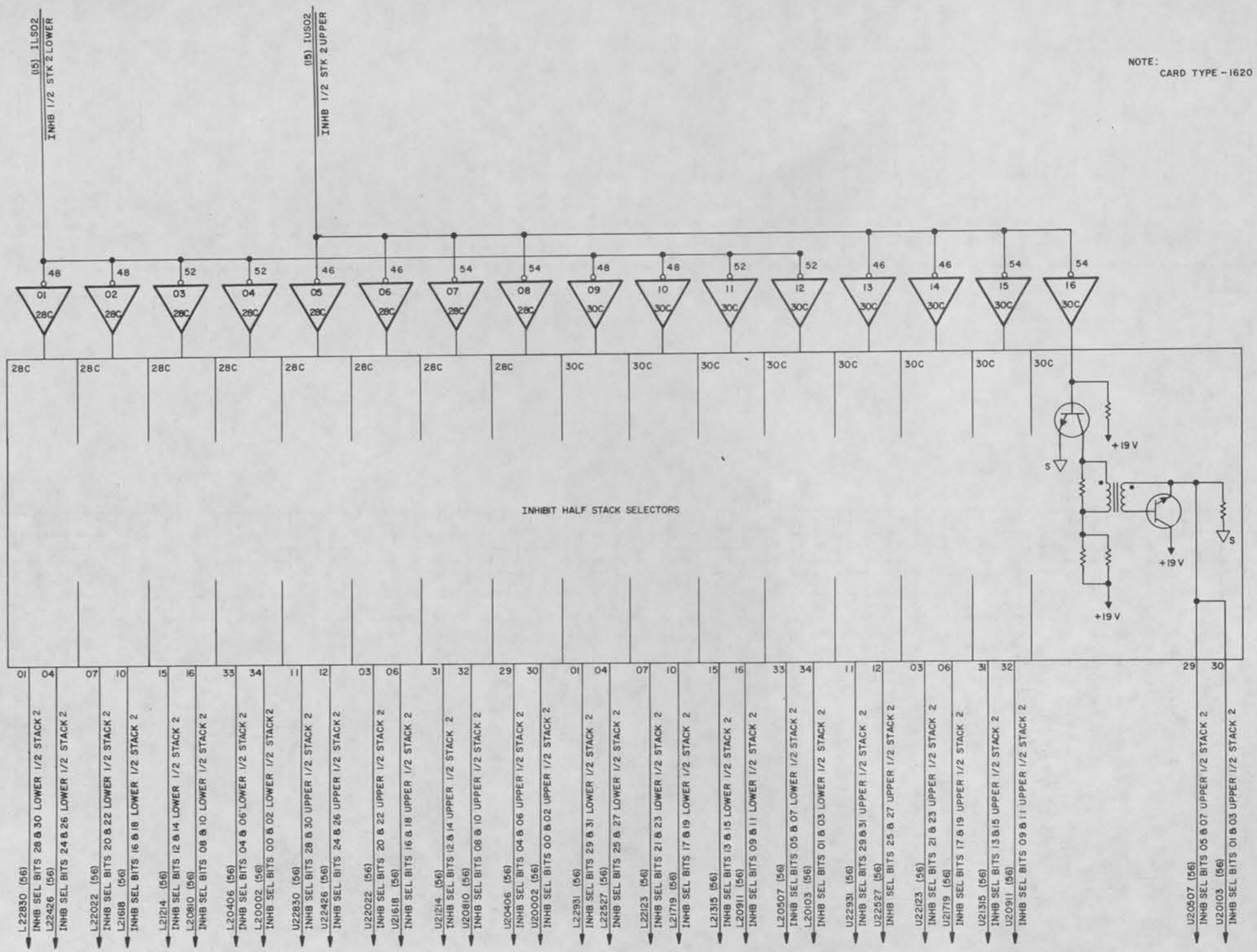

INHIBIT HALF STACK SELECTORS, STACK 2

SIZE	CODE IDENT	DWG NO.
D	90536	7072000
SCALE	CLASS A	SHEET 55

DWG. NO. 7072000

UD 1-8534C

ZONE	LTR	EIR	DESCRIPTION	CHK	DATE	APPROVED

REVISIONS

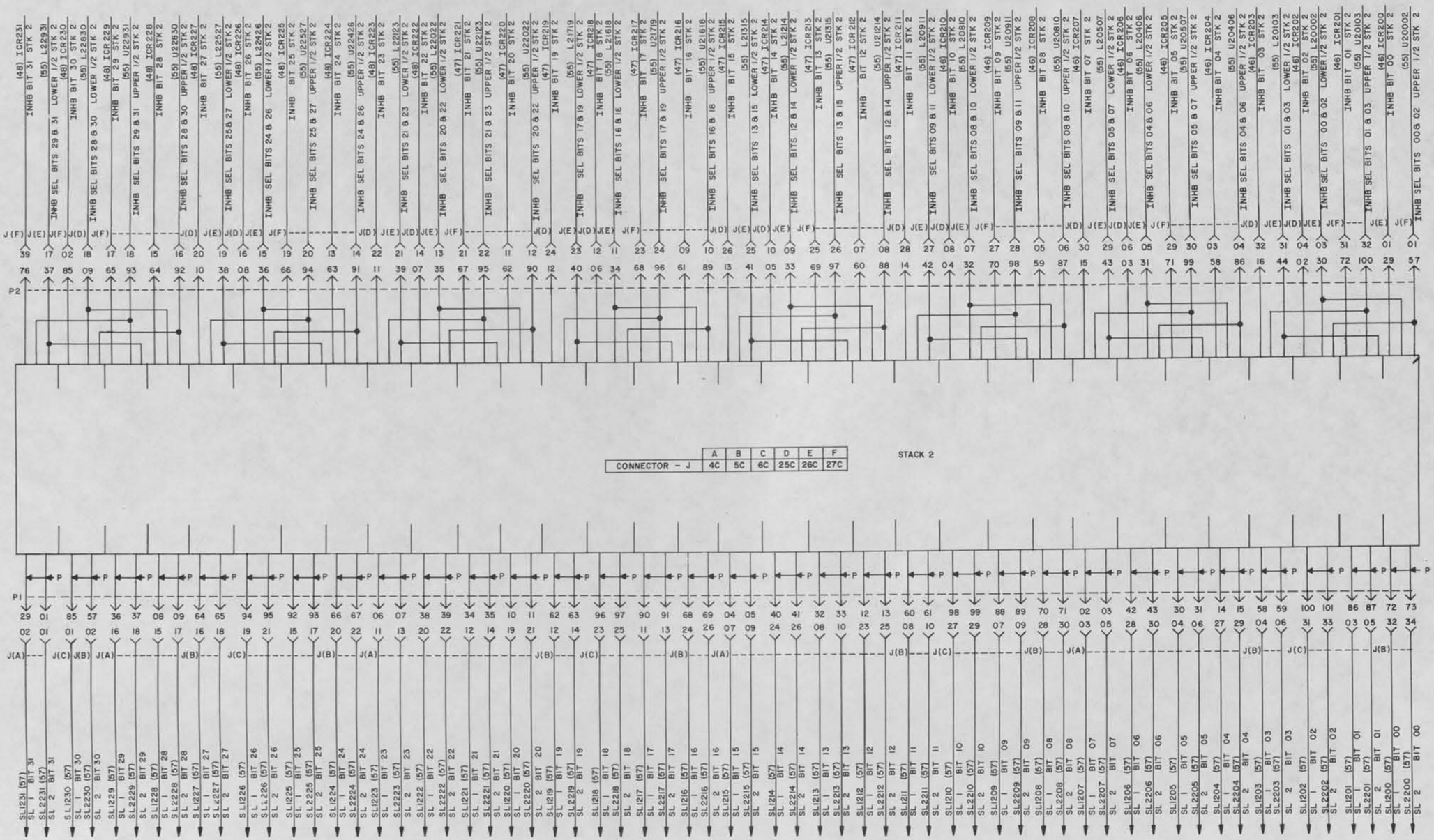

SENSE & INHIBIT LINES, STACK 2

SIZE	CODE IDENT	DWG NO.
D	90536	7072000
SCALE	CLASS A	SHEET 56

DWG. NO. 7072000

UD 1-2534C

REVISIONS						
ZONE	LTR	EIR	DESCRIPTION	CHK	DATE	APPROVED
	B	D03855	SEE EIR	DJ	5-10-71	[illegible]
		104877-001			7-12-72	[illegible]

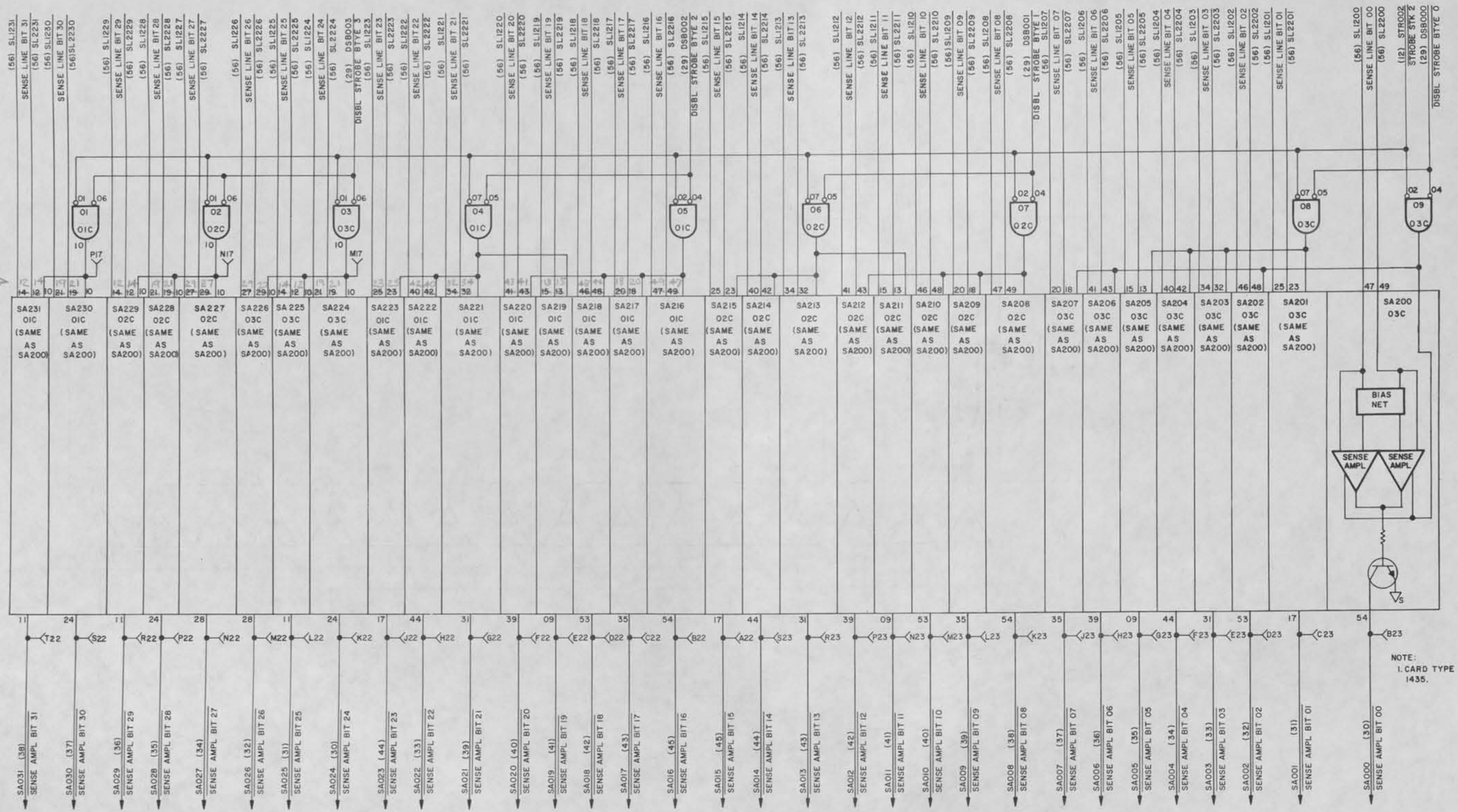

NOTE:
1. CARD TYPE 1435.

DWG. NO. 7072000

SENSE AMPLIFIERS, STACK 2, BITS 00-31

SIZE	CODE IDENT	DWG NO.
D	90536	7072000
SCALE	CLASS A	SHEET 57

UD 1-8534C

REVISIONS						
ZONE	LTR	EIR	DESCRIPTION	CHK	DATE	APPROVED

NOTE:
CARD TYPE - 1620

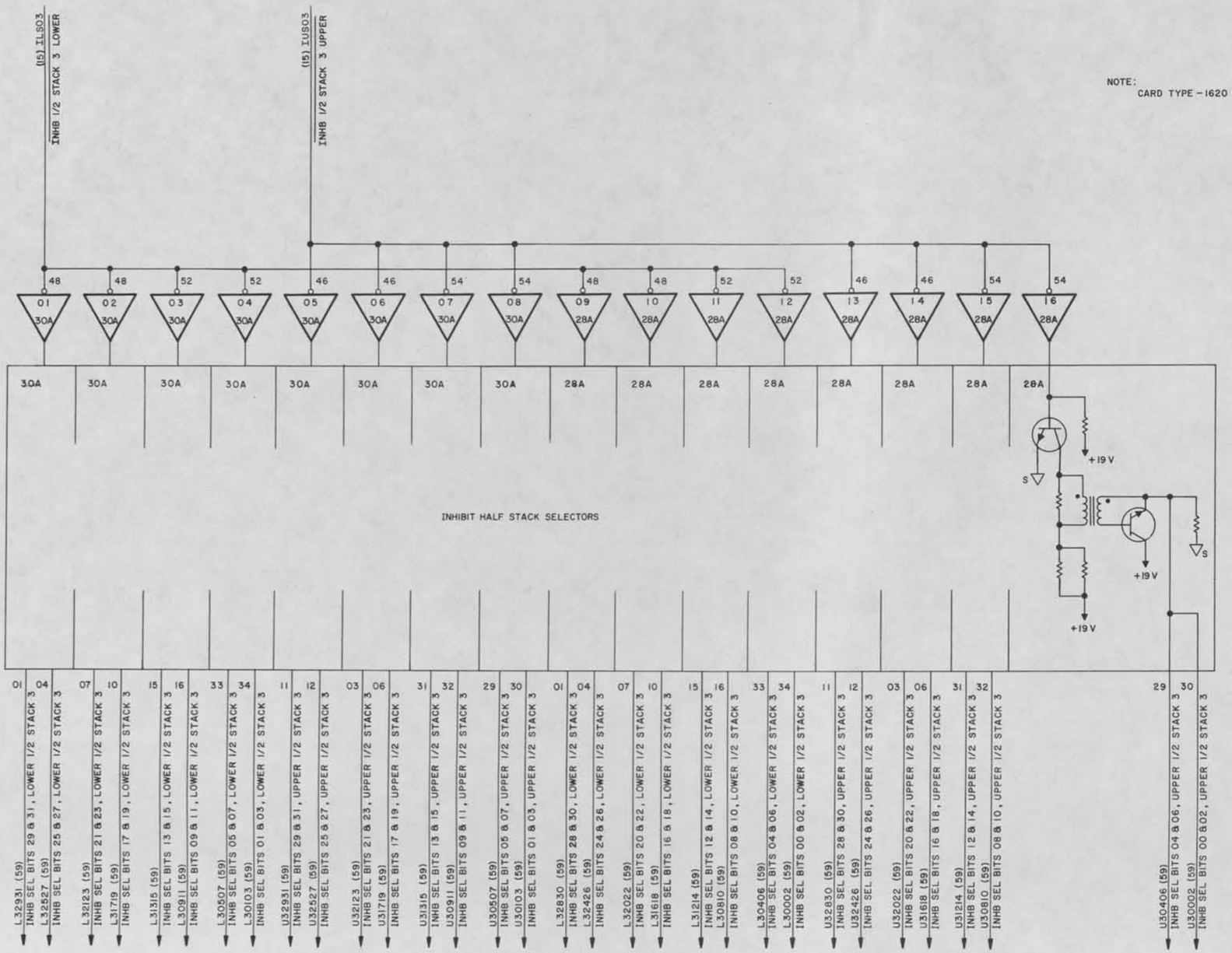

DWG. NO. 7072000

INHIBIT HALF STACK SELECTORS, STACK 3

SIZE	CODE IDENT	DWG NO.
D	90536	7072000
SCALE	CLASS A	SHEET 58

UD 1-2534C

ZONE	LTR	EIR	REVISIONS DESCRIPTION	CHK	DATE	APPROVED

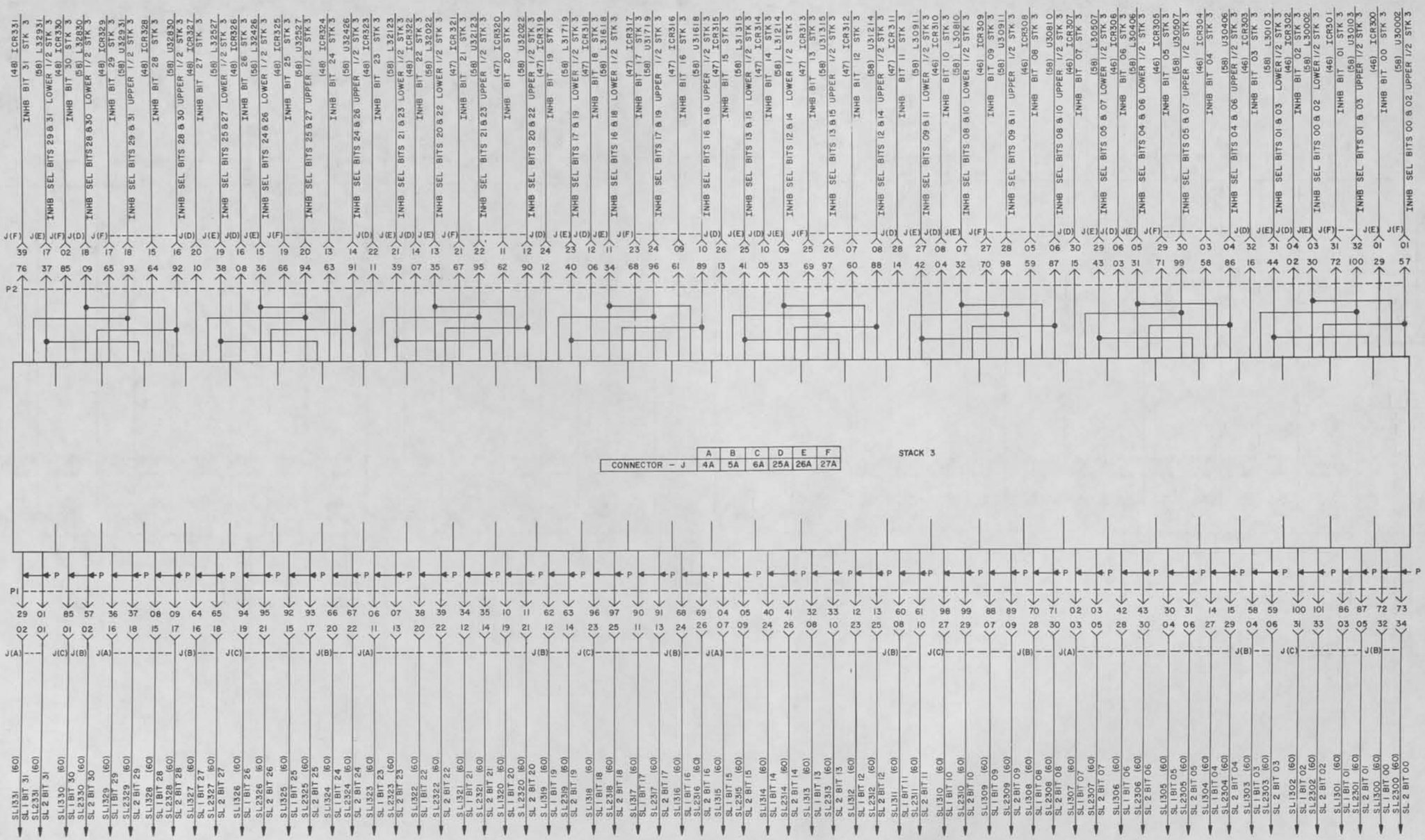

SENSE & INHIBIT LINES, STACK 3

SIZE	CODE IDENT	DWG NO.
D	90536	7072000
SCALE	CLASS A	SHEET 59

DWG. NO. 7072000

UD 1-2534C

REVISIONS						
ZONE	LTR	EIR	DESCRIPTION	CHK	DATE	APPROVED
	B	D03855	SEE EIR	DJ	5-10-71	

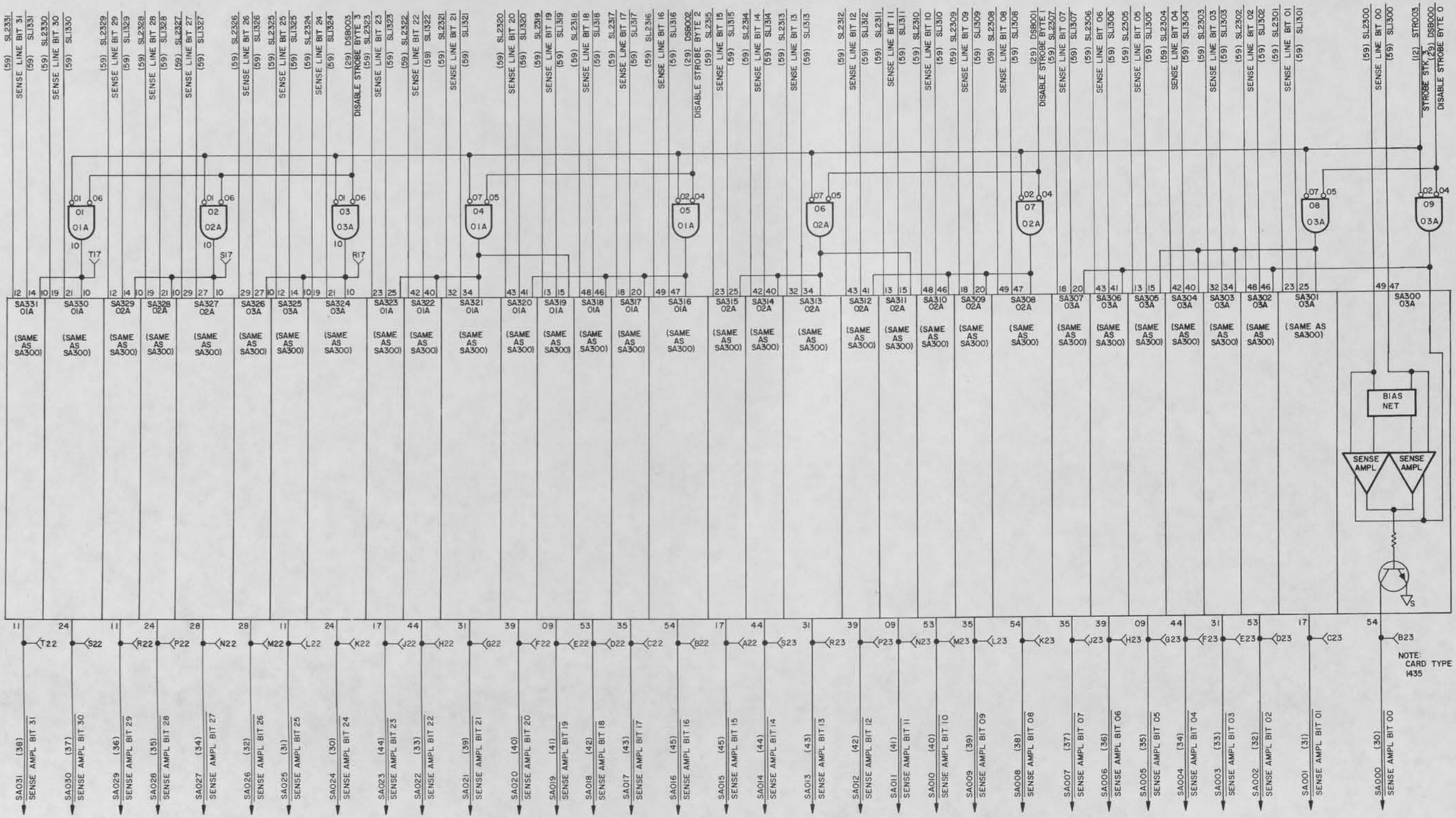

SENSE AMPLIFIERS, STACK 3, BITS 00-31

SIZE	CODE IDENT	DWG NO.
D	90536	7072000
SCALE	CLASS A	SHEET 60

DWG. NO. 7072000

UD 1-8534C

REVISIONS						
ZONE	LTR	EIR	DESCRIPTION	CHK	DATE	APPROVED

P2-112 56 CODE	P2-84 55 TEMP SENSOR	DRIVE LINES
P2-111 54 YDT SEC 2	P2-83 53 +19V	
P2-110 52 RES TO PI-80	P2-82 51 RES TO PI-27	
P2-109 50 RES TO PI-25	P2-81 49 RES TO PI-53	
P2-108 48 YDT SEC 2	P2-80 47 YDT SEC 4	
P2-107 46 X WRITE DIODE 0	P2-79 45 X READ DIODE 0	
P2-106 44 X WRITE DIODE 2	P2-78 43 X WRITE DIODE 1	DRIVE LINES
P2-105 42 X WRITE DIODE 3	P2-77 41 YDT SEC 7	
P2-104 40 YDT SEC 0	P2-76 39 INHIBIT BIT 31	
P2-103 38 RES TO PI-103	P2-75 37 RES TO PI-16	
P2-102 36 RES TO PI-18	P2-74 35 RES TO PI-46	DRIVE LINES
P2-101 34 YDT SEC 4	P2-73 33 YDT SEC 5	
P2-100 32 INHB SEL BITS 01 & 03 UPR	P2-72 31 INHIBIT BIT 01	INHIBIT SELECTOR BITS
P2-99 30 INHB SEL BITS 05 & 07 UPR	P2-71 29 INHIBIT BIT 05	
P2-98 28 INHB SEL BITS 09 & 11 UPR	P2-70 27 INHIBIT BIT 09	
P2-97 26 INHB SEL BITS 13 & 15 UPR	P2-69 25 INHIBIT BIT 13	
P2-96 24 INHB SEL BITS 17 & 19 UPR	P2-68 23 INHIBIT BIT 17	
P2-95 22 INHB SEL BITS 21 & 23 UPR	P2-67 21 INHIBIT BIT 21	
P2-94 20 INHB SEL BITS 25 & 27 UPR	P2-66 19 INHIBIT BIT 25	
P2-93 18 INHB SEL BITS 29 & 31 UPR	P2-65 17 INHIBIT BIT 29	
P2-92 16 INHB SEL BITS 28 & 30 UPR	P2-64 15 INHIBIT BIT 28	
P2-91 14 INHB SEL BITS 24 & 26 UPR	P2-63 13 INHIBIT BIT 24	
P2-90 12 INHB SEL BITS 20 & 22 UPR	P2-62 11 INHIBIT BIT 20	
P2-89 10 INHB SEL BITS 16 & 18 UPR	P2-61 09 INHIBIT BIT 16	
P2-88 08 INHB SEL BITS 12 & 14 UPR	P2-60 07 INHIBIT BIT 12	
P2-87 06 INHB SEL BITS 08 & 10 UPR	P2-59 05 INHIBIT BIT 08	
P2-86 04 INHB SEL BITS 04 & 06 UPR	P2-58 03 INHIBIT BIT 04	
P2-85 02 INHIBIT BIT 30	P2-57 01 INHB SEL BITS 00 & 02 UPR	
J27 OR J60	J27 OR J60	

P2-56 55 TEMP SNSR RTN	P2-28 56 (NOT USED)	DRIVE LINES
P2-55 53 YDT SEC 0	P2-27 54 YDT SEC 1	
P2-54 51 RES TO PI-108	P2-26 52 RES TO PI-110	
P2-53 49 RES TO PI-81	P2-25 50 RES TO PI-55	
P2-52 47 YDT SEC 5	P2-24 48 YDT SEC 6	
P2-51 45 YDT SEC 1	P2-23 46 YDT SEC 3	
P2-50 43 X READ DIODE 2	P2-22 44 X READ DIODE 1	
P2-49 41 RES TO PI-44	P2-21 42 (NOT USED)	DRIVE LINES
P2-48 39 YDT SEC 3	P2-20 40 X READ DIODE 3	
P2-47 37 (NOT USED)	P2-19 38 RES TO PI-75	
P2-46 35 RES TO PI-20	P2-18 36 RES TO PI-45	
P2-45 33 YDT SEC 6	P2-17 34 YDT SEC 7	
P2-44 31 INHB SEL BITS 01 & 03 LWR	P2-16 32 INHIBIT BIT 03	INHIBIT SELECTOR BITS
P2-43 29 INHB SEL BITS 05 & 07 LWR	P2-15 30 INHIBIT BIT 07	
P2-42 27 INHB SEL BITS 09 & 11 LWR	P2-14 28 INHIBIT BIT 11	
P2-41 25 INHB SEL BITS 13 & 15 LWR	P2-13 26 INHIBIT BIT 15	
P2-40 23 INHB SEL BITS 17 & 19 LWR	P2-12 24 INHIBIT BIT 19	
P2-39 21 INHB SEL BITS 21 & 23 LWR	P2-11 22 INHIBIT BIT 23	
P2-38 19 INHB SEL BITS 25 & 27 LWR	P2-10 20 INHIBIT BIT 27	INHIBIT BITS
P2-37 17 INHB SEL BITS 29 & 31 LWR	P2-09 18 INHB SEL BITS 28 & 30 LWR	
P2-36 15 INHB SEL BITS 24 & 26 LWR	P2-08 16 INHIBIT BIT 26	
P2-35 13 INHB SEL BITS 20 & 22 LWR	P2-07 14 INHIBIT BIT 22	
P2-34 11 INHB SEL BITS 16 & 18 LWR	P2-06 12 INHIBIT BIT 18	
P2-33 09 INHB SEL BITS 12 & 14 LWR	P2-05 10 INHIBIT BIT 14	INHIBIT BITS
P2-32 07 INHB SEL BITS 08 & 10 LWR	P2-04 08 INHIBIT BIT 10	
P2-31 05 INHB SEL BITS 04 & 06 LWR	P2-03 06 INHIBIT BIT 06	
P2-30 03 INHB SEL BITS 00 & 02 LWR	P2-02 04 INHIBIT BIT 02	
P2-29 01 INHIBIT BIT 00	P2-01 02 CODE	
J26 OR J59	J25 OR J58	

P2

PI-112 55 CODE	PI-84 56	DRIVE LINES
PI-111 53 RES TO P2-55	PI-83 54 (NOT USED)	
PI-110 51 XDT SEC 7	PI-82 52 Y WRITE DIODE 2	
PI-109 49 Y READ DIODE 3	PI-81 50 XDT SEC 4	
PI-108 47 XDT SEC 4	PI-80 48 XDT SEC 6	
PI-107 45 RES TO P2-111	PI-79 46 RES TO P2-48	
PI-106 43 RES TO P2-108	PI-78 44 RES TO P2-23	
PI-105 41 RES TO P2-73	PI-77 42 RES TO P2-101	DRIVE LINES
PI-104 39 RES TO P2-52	PI-76 40 (NOT USED)	
PI-103 37 XDT SEC 1	PI-75 38 XDT SEC 3	
PI-102 35 Y WRITE DIODE 1	PI-74 36 Y WRITE DIODE 0	
PI-101 33 BIT 02 SL 02	PI-73 34 BIT 00 SL 02	SENSE LINES
PI-100 31 BIT 02 SL 01	PI-72 32 BIT 00 SL 01	
PI-99 29 BIT 10 SL 02	PI-71 30 BIT 08 SL 02	
PI-98 27 BIT 10 SL 01	PI-70 28 BIT 08 SL 01	
PI-97 25 BIT 18 SL 02	PI-69 26 BIT 16 SL 02	
PI-96 23 BIT 18 SL 01	PI-68 24 BIT 16 SL 01	
PI-95 21 BIT 26 SL 02	PI-67 22 BIT 24 SL 02	
PI-94 19 BIT 26 SL 01	PI-66 20 BIT 24 SL 01	
PI-93 17 BIT 25 SL 02	PI-65 18 BIT 27 SL 02	
PI-92 15 BIT 25 SL 01	PI-64 16 BIT 27 SL 01	
PI-91 13 BIT 17 SL 02	PI-63 14 BIT 19 SL 02	
PI-90 11 BIT 17 SL 01	PI-62 12 BIT 19 SL 01	
PI-89 09 BIT 09 SL 02	PI-61 10 BIT 11 SL 02	
PI-88 07 BIT 09 SL 01	PI-60 08 BIT 11 SL 01	
PI-87 05 BIT 01 SL 02	PI-59 06 BIT 03 SL 02	
PI-86 03 BIT 01 SL 01	PI-58 04 BIT 03 SL 01	
PI-85 01 BIT 30 SL 01	PI-57 02 BIT 30 SL 02	
J6 OR J39	J5 OR J38	

PI-56 56	PI-28 55 (NOT USED)	DRIVE LINES
PI-55 54 XDT SEC 7	PI-27 53 XDT SEC 5	
PI-54 52 Y WRITE DIODE 3	PI-26 51 Y READ DIODE 2	
PI-53 50 XDT SEC 5	PI-25 49 XDT SEC 6	
PI-52 48 CODE	PI-24 47 RES TO P2-51	
PI-51 46 RES TO P2-104	PI-23 45 RES TO P2-27	
PI-50 44 RES TO P2-17	PI-22 43 RES TO P2-45	
PI-49 42 RES TO P2-77	PI-21 41 RES TO P2-24	DRIVE LINES
PI-48 40 (NOT USED)	PI-20 39 XDT SEC 3	
PI-47 38 Y READ DIODE 1	PI-19 37 Y READ DIODE 0	
PI-46 36 XDT SEC 0	PI-18 35 XDT SEC 1	
PI-45 34 XDT SEC 2	PI-17 33 RES TO P2-80	
PI-44 32 XDT SEC 2	PI-16 31 XDT SEC 0	
PI-43 30 BIT 06 SL 02	PI-15 29 BIT 04 SL 02	SENSE LINES
PI-42 28 BIT 06 SL 01	PI-14 27 BIT 04 SL 01	
PI-41 26 BIT 14 SL 02	PI-13 25 BIT 12 SL 02	
PI-40 24 BIT 14 SL 01	PI-12 23 BIT 12 SL 01	
PI-39 22 BIT 22 SL 02	PI-11 21 BIT 20 SL 02	
PI-38 20 BIT 22 SL 01	PI-10 19 BIT 20 SL 01	
PI-37 18 BIT 29 SL 02	PI-09 17 BIT 28 SL 02	
PI-36 16 BIT 29 SL 01	PI-08 15 BIT 28 SL 01	
PI-35 14 BIT 21 SL 02	PI-07 13 BIT 23 SL 02	
PI-34 12 BIT 21 SL 01	PI-06 11 BIT 23 SL 01	
PI-33 10 BIT 13 SL 02	PI-05 09 BIT 15 SL 02	
PI-32 08 BIT 13 SL 01	PI-04 07 BIT 15 SL 01	
PI-31 06 BIT 05 SL 02	PI-03 05 BIT 07 SL 02	
PI-30 04 BIT 05 SL 01	PI-02 03 BIT 07 SL 01	
PI-29 02 BIT 31 SL 01	PI-01 01 BIT 31 SL 02	
J4 OR J37	J4 OR J37	

STACKS 1,3 (A ROW) OR STACKS 0,2 (C ROW)

PI

STACKS 1,3 (A ROW) OR STACKS 0,2 (C ROW)

DWG. NO. 7072000

STACK CONNECTOR (SIGNALS)

SIZE	CODE IDENT	DWG NO.
D	90536	7072000
SCALE	CLASS A	SHEET 61

UD 1-8534C

REVISIONS						
ZONE	LTR	EIR	DESCRIPTION	CHK	DATE	APPROVED

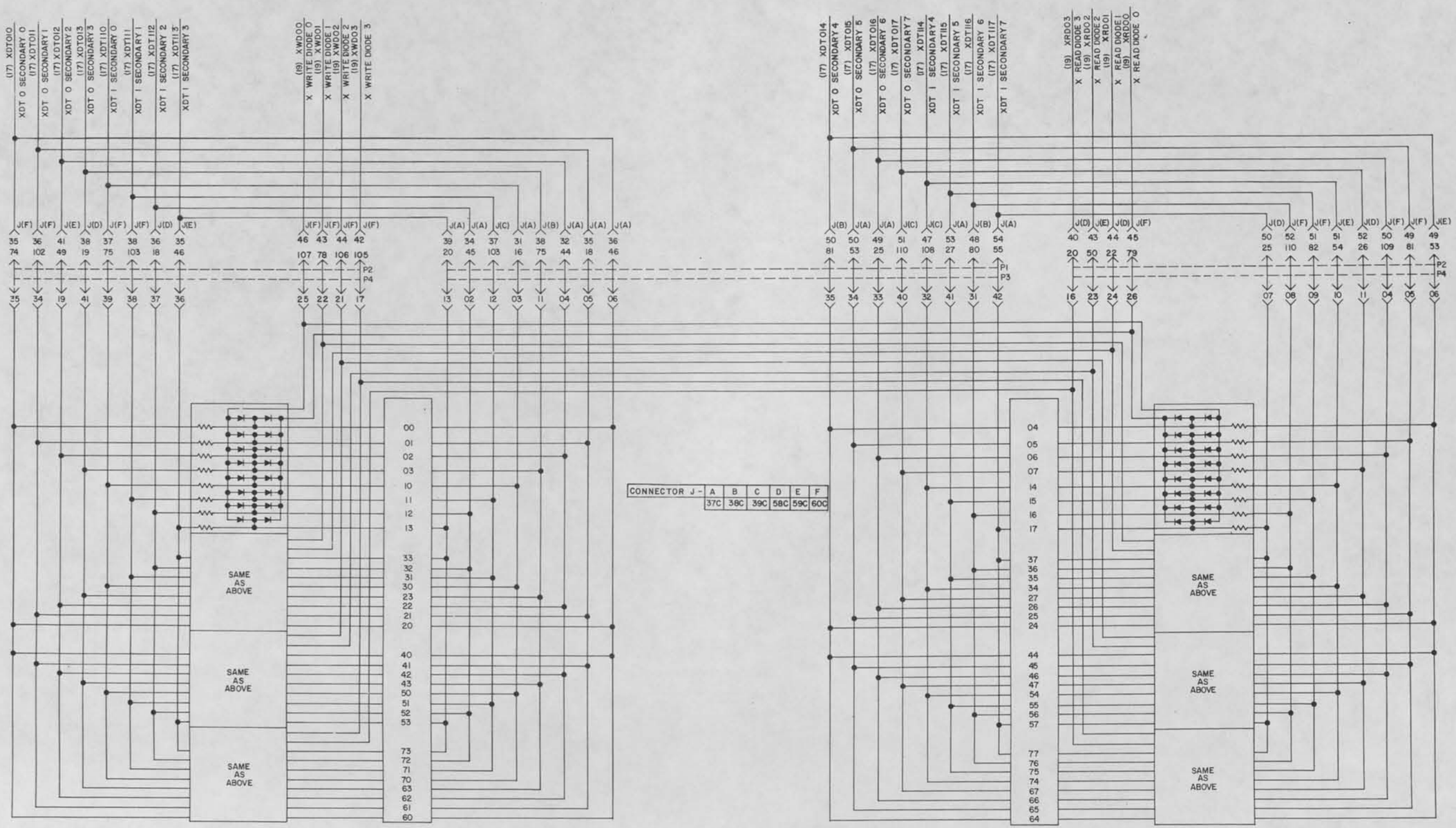

CONNECTOR J -	A	B	C	D	E	F
	37C	38C	39C	58C	59C	60C

MEMORY STACK DRIVE LINES, X AXIS (STACK 0)

SIZE	CODE IDENT	DWG NO.
D	90536	7072000
SCALE	CLASS A	SHEET 62

DWG. NO. 7072000

UD 1-8534C

REVISIONS						
ZONE	LTR	EIR	DESCRIPTION	CHK	DATE	APPROVED

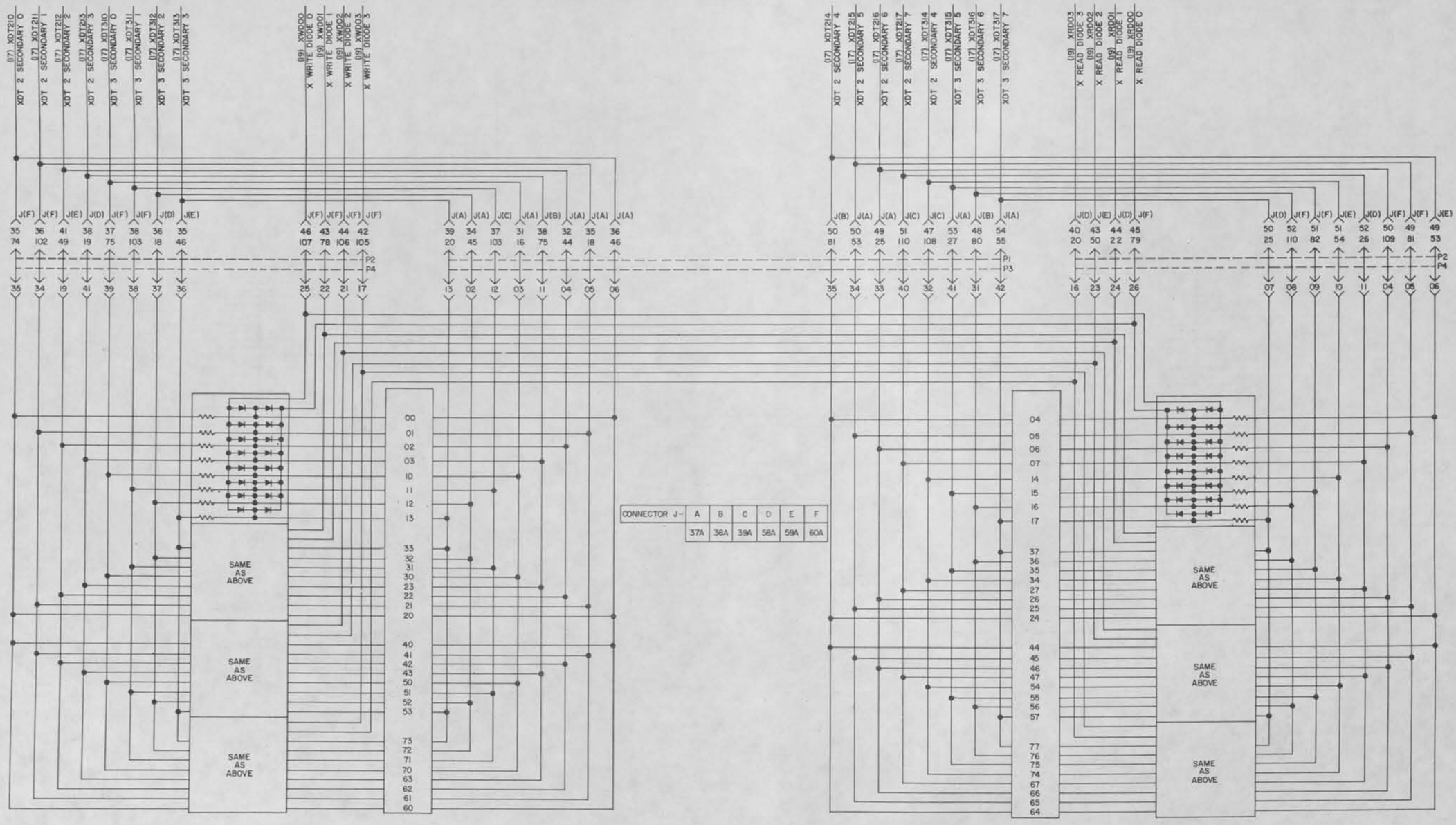

CONNECTOR J-	A	B	C	D	E	F
	37A	38A	39A	58A	59A	60A

MEMORY STACK DRIVE LINES, X AXIS (STACK I)

SIZE	CODE IDENT	DWG NO.
D	90536	7072000
SCALE	CLASS A	SHEET 63

DWG. NO. 7072000

UD 1-8534C

REVISIONS						
ZONE	LTR	EIR	DESCRIPTION	CHK	DATE	APPROVED

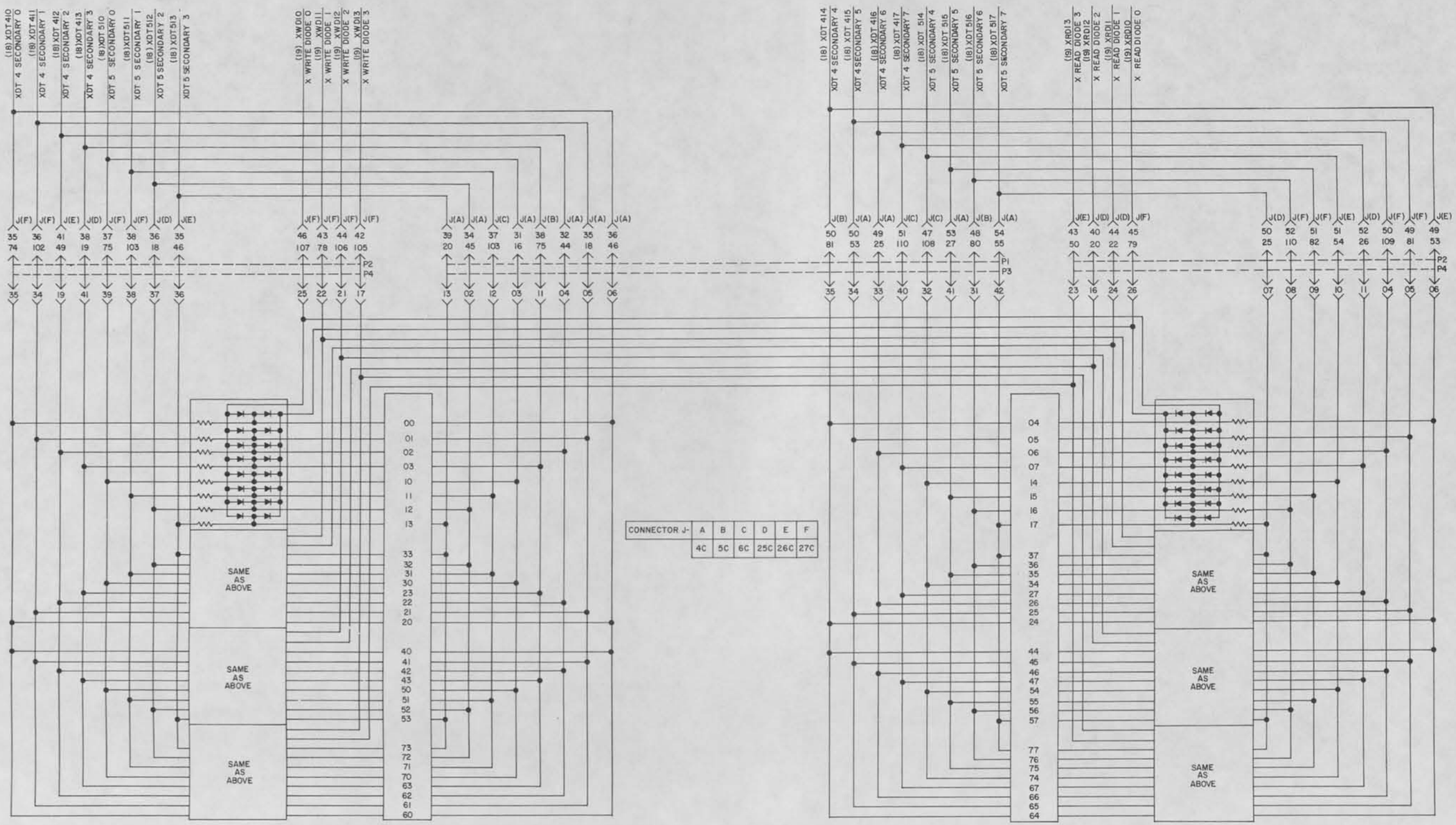

CONNECTOR J-	A	B	C	D	E	F
	4C	5C	6C	25C	26C	27C

MEMORY STACK DRIVE LINES, X AXIS (STACK 2)

SIZE	CODE IDENT	DWG NO.
D	90536	7072000
SCALE	CLASS A	SHEET 64

DWG. NO. 7072000

UD 1-5534C

REVISIONS						
ZONE	LTR	EIR	DESCRIPTION	CHK	DATE	APPROVED

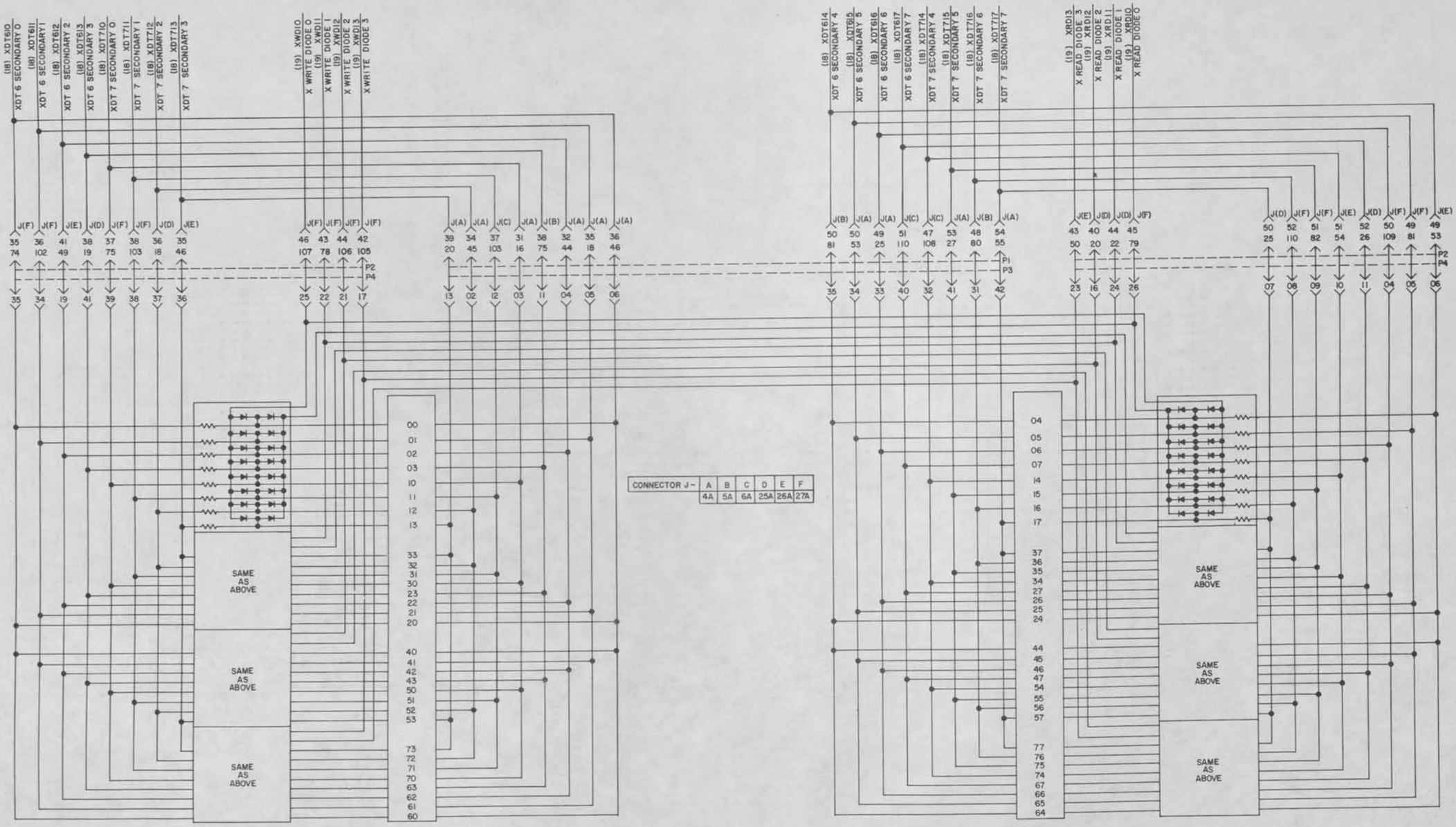

CONNECTOR J-	A	B	C	D	E	F
	4A	5A	6A	25A	26A	27A

MEMORY STACK DRIVE LINE, X AXIS (STACK 3)

SIZE	CODE IDENT	DWG NO.
D	90536	7072000
SCALE	CLASS A	SHEET 65

DWG. NO. 7072000

UD 1-8534C

REVISIONS						
ZONE	LTR	EIR	DESCRIPTION	CHK	DATE	APPROVED

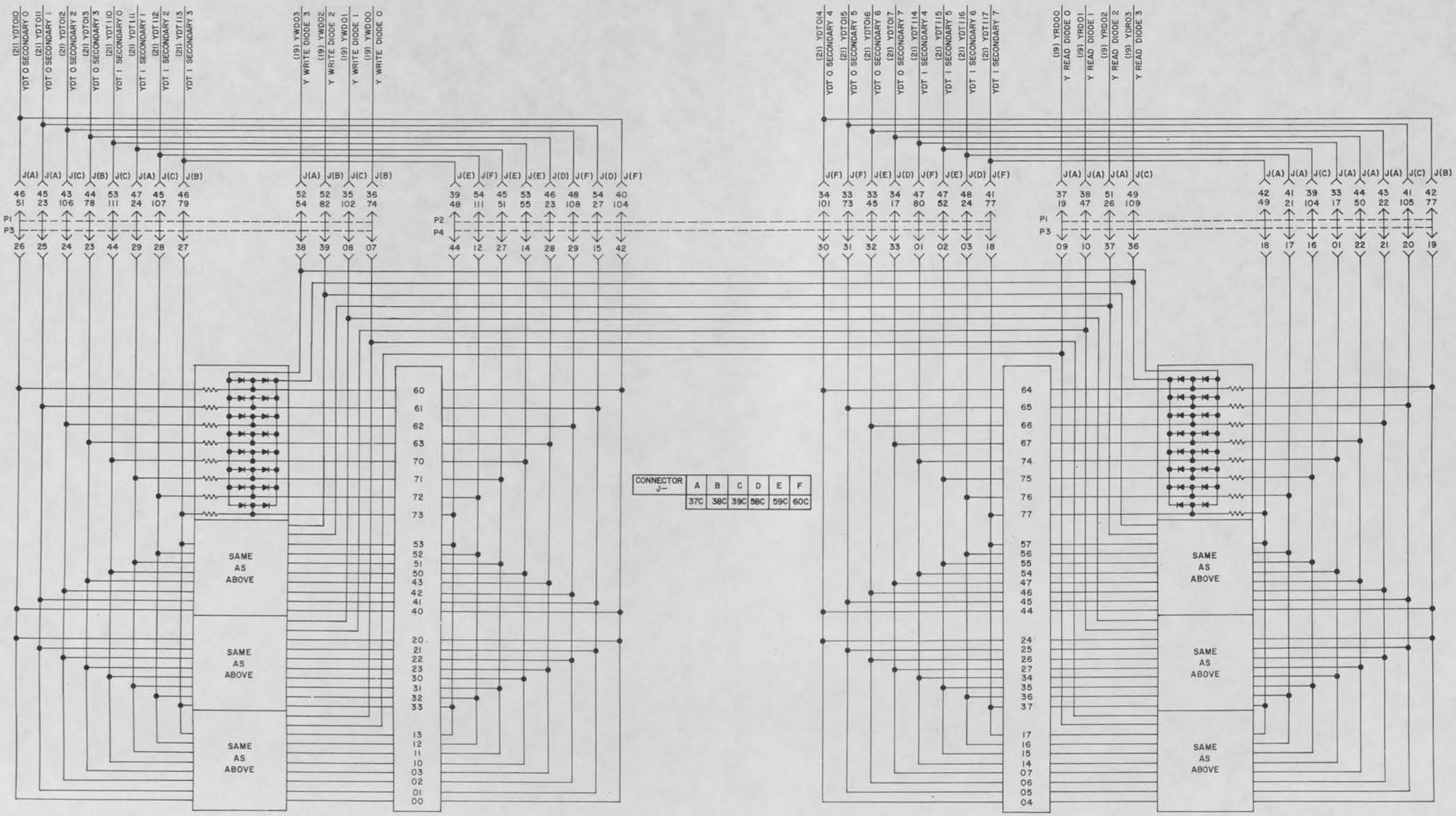

CONNECTOR J—	A	B	C	D	E	F
	37C	38C	39C	58C	59C	60C

MEMORY STACK DRIVE LINES, Y AXIS (STACK 0)

SIZE	CODE IDENT	DWG NO.
D	90536	7072000
SCALE	CLASS A	SHEET 66

DWG. NO. 7072000

UD 1-8534C

REVISIONS						
ZONE	LTR	EIR	DESCRIPTION	CHK	DATE	APPROVED

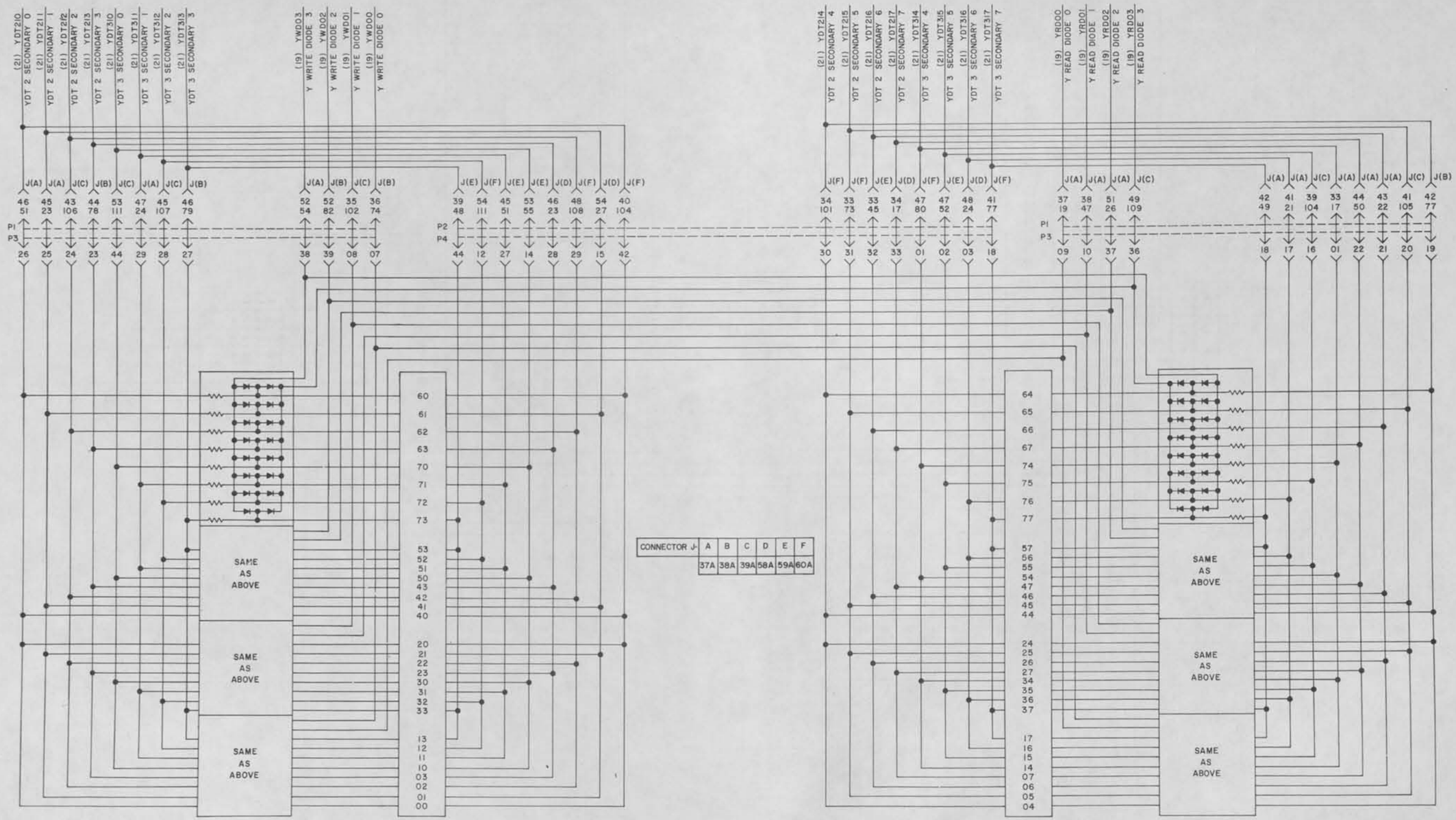

CONNECTOR J-	A	B	C	D	E	F
	37A	38A	39A	58A	59A	60A

MEMORY STACK DRIVE LINES, Y AXIS (STACK I)

SIZE	CODE IDENT	DWG NO.
D	90536	7072000
SCALE	CLASS A	SHEET 67

DWG. NO. 7072000

UD 1-8534C

REVISIONS						
ZONE	LTR	EIR	DESCRIPTION	CHK	DATE	APPROVED

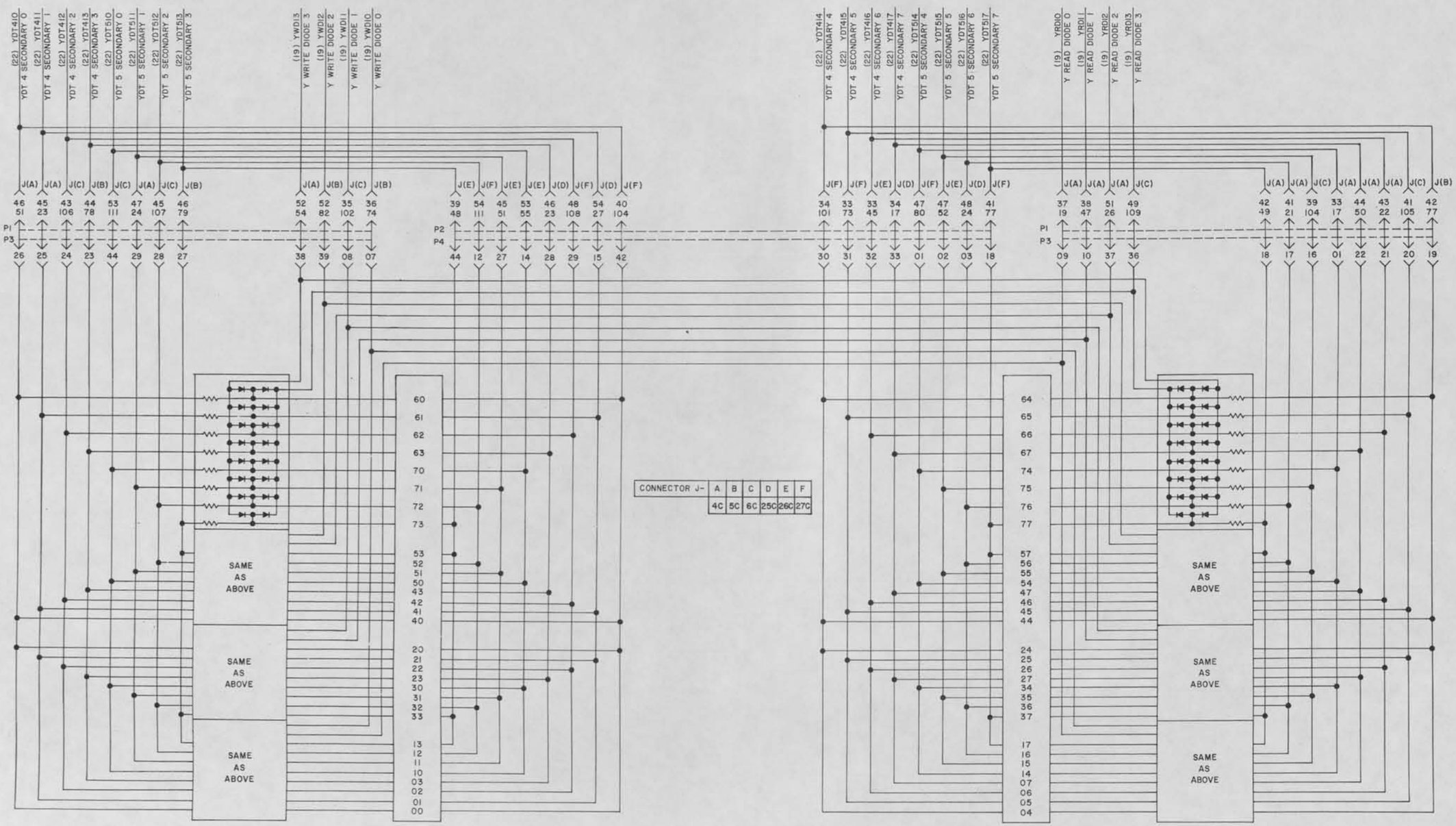

CONNECTOR J-	A	B	C	D	E	F
	4C	5C	6C	25C	26C	27C

MEMORY STACK DRIVE LINES, Y AXIS (STACK 2)

SIZE	CODE IDENT	DWG NO.
D	90536	7072000
SCALE	CLASS A	SHEET 68

DWG. NO. 7072000

UD 1-8534C

REVISIONS						
ZONE	LTR	EIR	DESCRIPTION	CHK	DATE	APPROVED

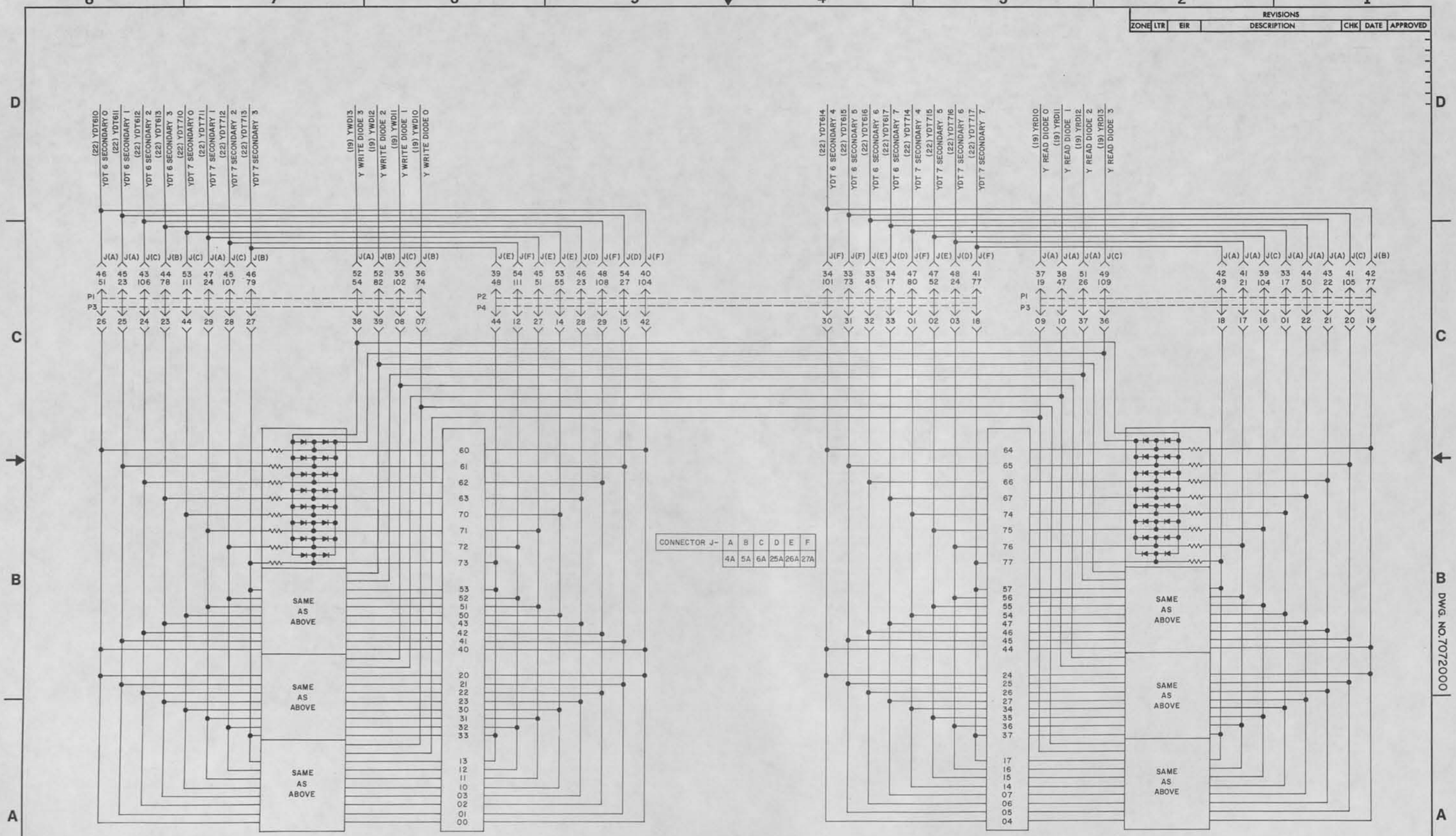

CONNECTOR J-	A	B	C	D	E	F
	4A	5A	6A	25A	26A	27A

MEMORY STACK DRIVE
LINES, Y AXIS (STACK 3)

SIZE	CODE IDENT	DWG NO.
D	90536	7072000
SCALE	CLASS A	SHEET 69

DWG. NO. 7072000

UD 1-8534C

REVISIONS						
ZONE	LTR	EIR	DESCRIPTION	CHK	DATE	APPROVED
	G	D09611	SEE EIR	AA	12-27-73	[illegible]

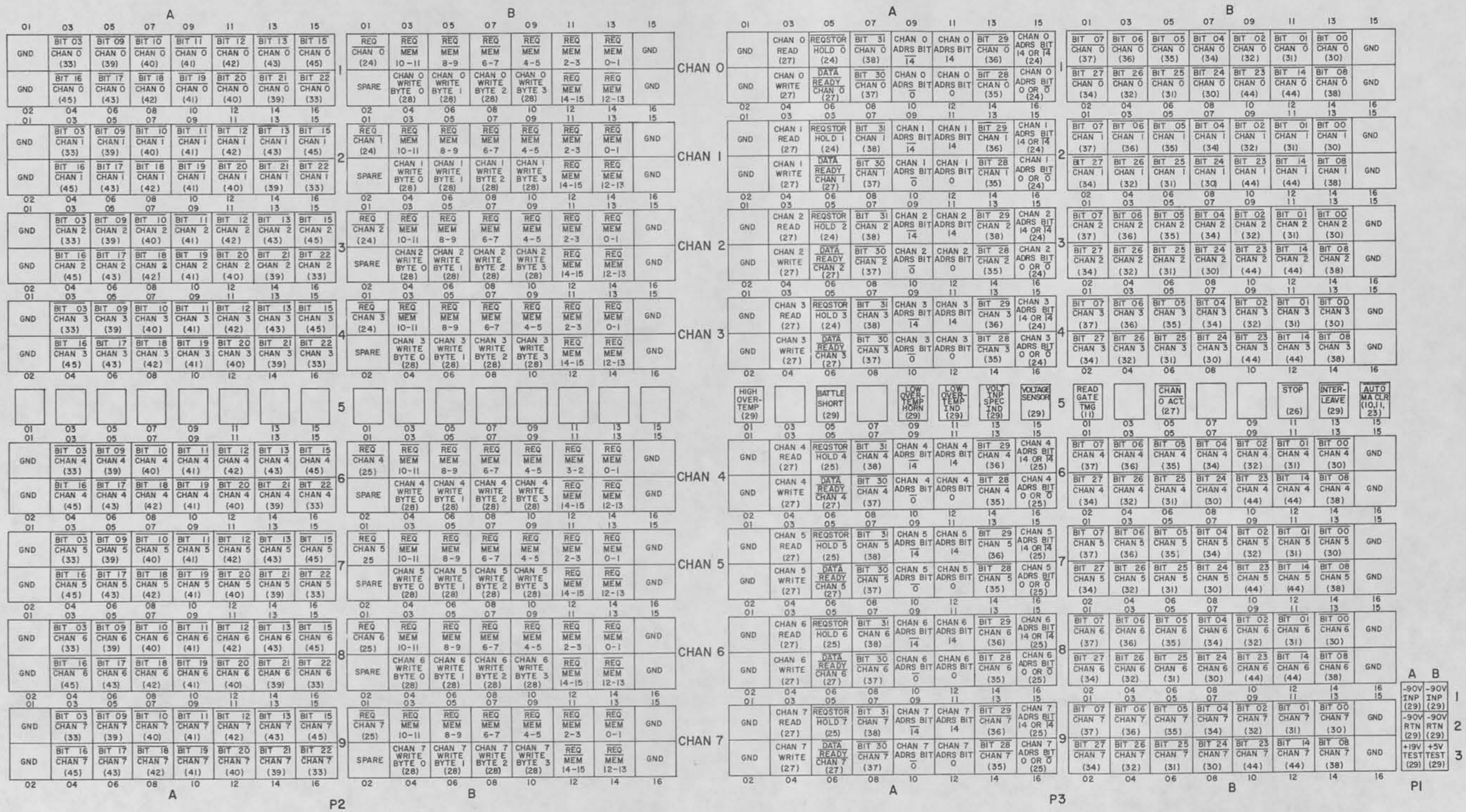

DWG. NO. 7072000

REAR CONNECTOR PLATE

SIZE	CODE IDENT	DWG NO.
D	90536	7072000
SCALE	CLASS A	SHEET 70

CHANGE 2

UD 1-8534C

ZONE	LTR	EIR	REVISIONS DESCRIPTION	CHK	DATE	APPROVED

	A	B	C	D	E	F	G	H	J	K	L	M	N	P	R	S	T	
1	GND		(29) +30V	(29) +19V	(29) +12V	(29) +5V		(29) −19V	(29) −6V								GND	1
2																		2
3	(29) LOW OVERTEMP	(29) HIGH OVERTEMP	(29) BATTLE SHORT BUSS SWITCH		(29) OVERVOLTAGE													3
4																		4
5																		5
6																		6
7	(29) DISBL STROBE BYTE 0	(29) DISBL STROBE BYTE 1	(29) DISBL STROBE BYTE 2	(29) DISBL STROBE BYTE 3														7
8	(43) Z17	(42) Z18	(41) Z19	(40) Z20	(39) Z21	(33) Z22	(44) Z23	(30) Z24	(31) Z25	(32) Z26	(34) Z27	(35) Z28	(36) Z29	(37) Z30	(38) Z31			8
9	(30) Z0	(31) Z1	(32) Z2	(33) Z3	(34) Z4	(35) Z5	(36) Z6	(37) Z7	(38) Z8	(39) Z9	(40) Z10	(41) Z11	(42) Z12	(43) Z13	(44) Z14	(45) Z15	(45) Z16	9
10	(28) WRITE BYTE 0	(28) WRITE BYTE 1	(28) WRITE BYTE 2	(28) WRITE BYTE 3		READ (27)	(27) WRITE		(29) BYTE CONTROL FF 0	(29) BYTE CONTROL FF 1	(29) BYTE CONTROL FF 2	(29) BYTE CONTROL FF 3		(29) WRITE BYTE 0	(29) WRITE BYTE 1	(29) WRITE BYTE 2	(29) WRITE BYTE 3	10
11	(26) CHAN 0 ACT.	(26) CHAN 1 ACT.	(26) CHAN 2 ACT.	(26) CHAN 3 ACT.	(26) CHAN 4 ACT.	(26) CHAN 5 ACT.	(26) CHAN 6 ACT.	(26) CHAN 7 ACT.		(26) L/O REQ FF'S 0-3	(26) L/O REQ FF'S 4-7		(26) GATE DATA READY		(29) INTERLEAVE 1			11
12	(15) INHB 1/2 STK 0 LWR	(15) INHB 1/2 STK 0 UPR	(15) INHB 1/2 STK 1 LWR	(15) INHB 1/2 STK 1 UPR	(15) INHB 1/2 STK 2 LWR	(15) INHB 1/2 STK 2 UPR	(15) INHB 1/2 STK 3 LWR	(15) INHB 1/2 STK 3 UPR		(24) REQ FF 0	(24) REQ FF 1	(24) REQ FF 2	(24) REQ FF 3	(25) REQ FF 4	(25) REQ FF 5	(25) REQ FF 6	(25) REQ FF 7	12
13	(13) X DIODE SEL 3	(13) X DIODE SEL 2	(13) X DIODE SEL 1	(13) X DIODE SEL 0		(14) Y DIODE SEL 3	(14) Y DIODE SEL 2	(14) Y DIODE SEL 1	(14) Y DIODE SEL 0	(15) STACK 3	(15) STACK 2	(15) STACK 1	(15) STACK 0	(15) STACK 3	(15) STACK 2	(15) STACK 1	(15) STACK 0	13
14	(14) Y PRI SEL 7	(14) Y PRI SEL 6	(14) Y PRI SEL 5	(14) Y PRI SEL 4	(14) Y PRI SEL 3	(14) Y PRI SEL 2	(14) Y PRI SEL 1	(14) Y PRI SEL 0	(14) Y SEC SEL 7	(14) Y SEC SEL 6	(14) Y SEC SEL 5	(14) Y SEC SEL 4	(14) Y SEC SEL 3	(14) Y SEC SEL 2	(14) Y SEC SEL 1	(14) Y SEC SEL 0	(11) ENTR S 03, 09-14	14
15	(13) X PRI SEL 7	(13) X PRI SEL 6	(13) X PRI SEL 5	(13) X PRI SEL 4	(13) X PRI SEL 3	(13) X PRI SEL 2	(13) X PRI SEL 1	(13) X PRI SEL 0	(13) X SEC SEL 7	(13) X SEC SEL 6	(13) X SEC SEL 5	(13) X SEC SEL 4	(13) X SEC SEL 3	(13) X SEC SEL 2	(13) X SEC SEL 1	(13) X SEC SEL 0	(11) ENTR S 00-02, 04-08	15
16	(11) MA CLR	(11) CLR CONT FF'S	(11) CLR Z BITS 00, 01, 14 & 23-25	(11) CLR Z BITS 02, 04, 05 & 26-28	(11) CLR Z BITS 03, 09, 10, 20-22	(11) CLR Z BITS 06-08, 29-31	(11) CLR Z BITS 11-13, 15-19	(11) CLR REQ RGTR	(11) CLR REQSTOR HOLD RGTR	(11) GATE CLR REQ RGTR	(11) CLR ACT. CHAN HOLD GATES	(11) READ GATE BITS 13, 15-17	(11) READ GATE BITS 11, 12, 18, 19	(11) READ GATE BITS 03, 09, 10, 20-22	(11) READ GATE BITS 00, 01, 14, 23-25	(11) READ GATE BITS 02, 04, 05, 26-28	(11) READ GATE BITS 06-08, 29-31	16
17	(12) STROBE STK 0 BITS 00-31	(12) STROBE STK 1 BITS 00-31	(12) STROBE STK 2 BITS 00-31	(12) STROBE STK 3 BITS 00-31		(51) STR100	(51) STR200	(51) STR300	(54) STR101	(54) STR201	(54) STR301	(57) STR102	(57) STR202	(57) STR302	(60) STR103	(60) STR203	(60) STR303	17
18	(26) READ/WRITE CYCLE FF		(13) S14	(15) S13	(15) S12	(14) S11	(14) S10	(14) S9	(14) S8	(14) S7	(14) S6	(13) S5	(13) S4	(13) S3	(13) S2	(13) S1	(13) S0	18
19	(23) X READ DRIVE CUR RGLTR	(23) X WRITE DRIVE CUR RGLTR	(23) Y READ DRIVE CUR RGLTR	(23) Y WRITE DRIVE CUR RGLTR		(11) START WRITE TMG	(12) INHB TMG 1 BITS 22-31	(12) INHB TMG 2 BITS 11-21	(12) INHB TMG 1 BITS 00-10	(12) WRITE 1 Y SEC SEL & R/W DIODE SEL	(12) READ 1 Y SEC SEL & R/W DIODE SEL	(12) READ 1 Y PRI SEL	(12) WRITE 1 Y PRI SEL	(12) WRITE 1 X SEC SEL & R/W DIODE SEL	(12) READ 1 X SEC SEL & R/W DIODE SEL	(12) READ 1 X PRI SEL	(12) WRITE 1 X PRI SEL	19
20	(47) INHB CUR RGLTR BIT 17	(47) INHB CUR RGLTR BIT 18	(47) INHB CUR RGLTR BIT 19	(47) INHB CUR RGLTR BIT 20	(47) INHB CUR RGLTR BIT 21	(48) INHB CUR RGLTR BIT 22	(48) INHB CUR RGLTR BIT 23	(48) INHB CUR RGLTR BIT 24	(48) INHB CUR RGLTR BIT 25	(48) INHB CUR RGLTR BIT 26	(48) INHB CUR RGLTR BIT 27	(48) INHB CUR RGLTR BIT 28	(48) INHB CUR RGLTR BIT 29	(48) INHB CUR RGLTR BIT 30	(48) INHB CUR RGLTR BIT 31	(11) INHB TMG *	(11) INHB TMG *	20
21	(46) INHB CUR RGLTR BIT 00	(46) INHB CUR RGLTR BIT 01	(46) INHB CUR RGLTR BIT 02	(46) INHB CUR RGLTR BIT 03	(46) INHB CUR RGLTR BIT 04	(46) INHB CUR RGLTR BIT 05	(46) INHB CUR RGLTR BIT 06	(46) INHB CUR RGLTR BIT 07	(46) INHB CUR RGLTR BIT 08	(46) INHB CUR RGLTR BIT 09	(46) INHB CUR RGLTR BIT 10	(47) INHB CUR RGLTR BIT 11	(47) INHB CUR RGLTR BIT 12	(47) INHB CUR RGLTR BIT 13	(47) INHB CUR RGLTR BIT 14	(47) INHB CUR RGLTR BIT 15	(47) INHB CUR RGLTR BIT 16	21
22	(51,54,57,60) SENSE AMPL BIT 15	(51,54,57,60) SENSE AMPL BIT 16	(51,54,57,60) SENSE AMPL BIT 17	(51,54,57,60) SENSE AMPL BIT 18	(51,54,57,60) SENSE AMPL BIT 19	(51,54,57,60) SENSE AMPL BIT 20	(51,54,57,60) SENSE AMPL BIT 21	(51,54,57,60) SENSE AMPL BIT 22	(51,54,57,60) SENSE AMPL BIT 23	(51,54,57,60) SENSE AMPL BIT 24	(51,54,57,60) SENSE AMPL BIT 25	(51,54,57,60) SENSE AMPL BIT 26	(51,54,57,60) SENSE AMPL BIT 27	(51,54,57,60) SENSE AMPL BIT 28	(51,54,57,60) SENSE AMPL BIT 29	(51,54,57,60) SENSE AMPL BIT 30	(51,54,57,60) SENSE AMPL BIT 31	22
23	GND	(51,54,57,60) SENSE AMPL BIT 00	(51,54,57,60) SENSE AMPL BIT 01	(51,54,57,60) SENSE AMPL BIT 02	(51,54,57,60) SENSE AMPL BIT 03	(51,54,57,60) SENSE AMPL BIT 04	(51,54,57,60) SENSE AMPL BIT 05	(51,54,57,60) SENSE AMPL BIT 06	(51,54,57,60) SENSE AMPL BIT 07	(51,54,57,60) SENSE AMPL BIT 08	(51,54,57,60) SENSE AMPL BIT 09	(51,54,57,60) SENSE AMPL BIT 10	(51,54,57,60) SENSE AMPL BIT 11	(51,54,57,60) SENSE AMPL BIT 12	(51,54,57,60) SENSE AMPL BIT 13	(51,54,57,60) SENSE AMPL BIT 14	GND	23

TEST POINT BLOCK (MEMORY CHASSIS)

SIZE	CODE IDENT	DWG NO.
D	90536	7072000
SCALE	CLASS A	SHEET 71.

DWG. NO. 7072000

UD 1-8534C

POWER SUPPLY

LIST OF DRAWINGS

POWER SUPPLY

Drawing	Title
7073375	Power Supply Schematic (115 Vac input)
7071630	Power Supply Schematic (208 Vac input)
7071720	-90V Switching Regulator
7071725	-90V Switching Regulator Circuit Card Assembly
7071800	Filter Assembly
7071812	DC-to-DC Converter Oscillator Assembly
7071881	Type B Converter Regulator Assembly
7071896	Filter Assembly
7071983	Filter Assembly
7073075	-20V Regulator Oscillator
7073076	-20V Regulator and Oscillator Circuit Card Assembly
7073175	Regulating Converter Assembly
7073190	Assembly Capacitor Block
7216911	Power Interrupt and Master Clear, Circuit Card Assembly
7216913	Regulating Converter, Circuit Card Assembly
7217069	DC-to-DC Converter Module Assembly, Type D
7217072	DC-to-DC Converter Module Assembly, Type E
7217074	DC-to-DC Converter Module Assembly, Type B
No Dwg. No.	Power Distribution, Block Diagram
No Dwg. No.	Over Temperature Control Circuits

REVISIONS					
ZONE	LTR	EIR	DESCRIPTION	CHK	DATE	APPROVED
	E	D02108	THIS SHEET ADDED			
	R	D00120	SEE EIR DOC CHANGE			

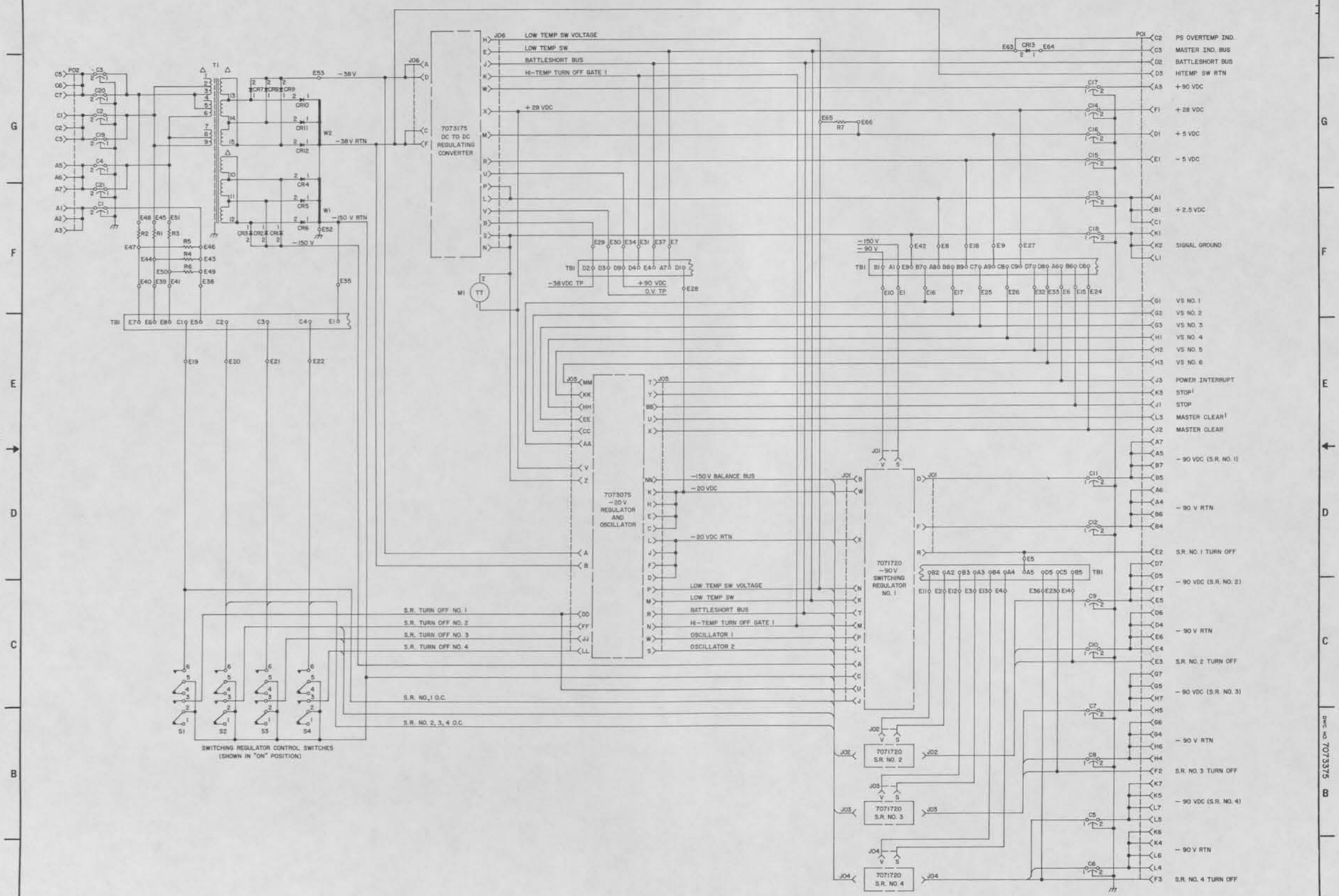

CHANGE 2

115V PWR SUPPLY

SIZE	CODE IDENT	DWG NO.
E	90536	7073375
SCALE	CLASS A	SHEET 2

DWG NO. 7073375

M01-3539C

ZONE	LTR	EIR	DESCRIPTION	CHK	DATE	APPROVED
	D	003759	CONVERTED TO CLASS A			
	E	004917	CHANGED ABOVE REV LETTER			
	M	00020	SEE EIR DOC CHANGE			

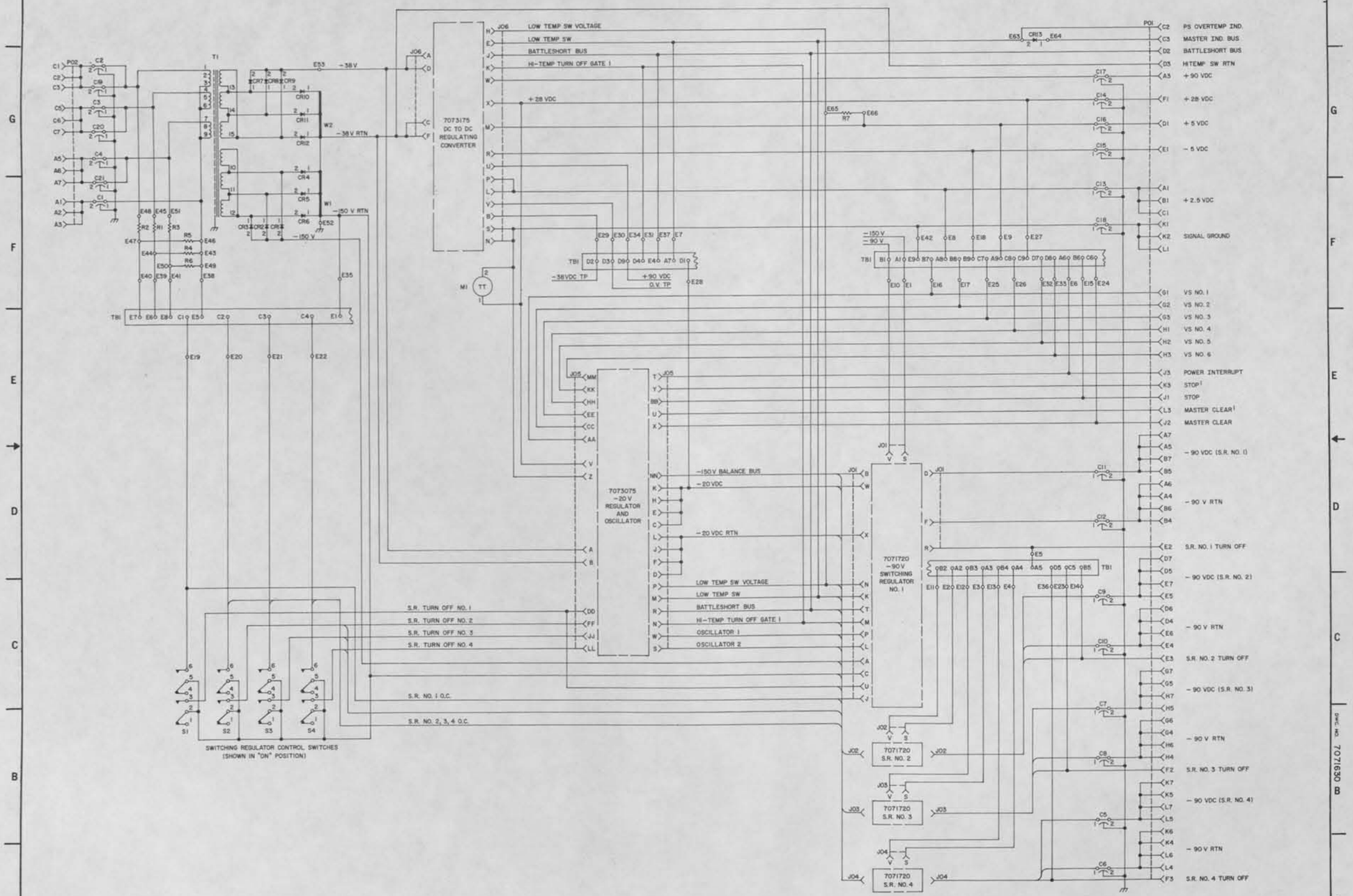

CHANGE 2

208V PWR SUPPLY

SIZE	CODE IDENT	DWG NO.
E	90536	7071630
SCALE	CLASS A	SHEET 2

DWG NO. 7071630 B

REVISIONS						
ZONE	LTR	ECO	DESCRIPTION	CHK	DATE	APPROVED
	U	00261	CONVERTED TO CLASS A	KJC	7/1/64	[illegible]

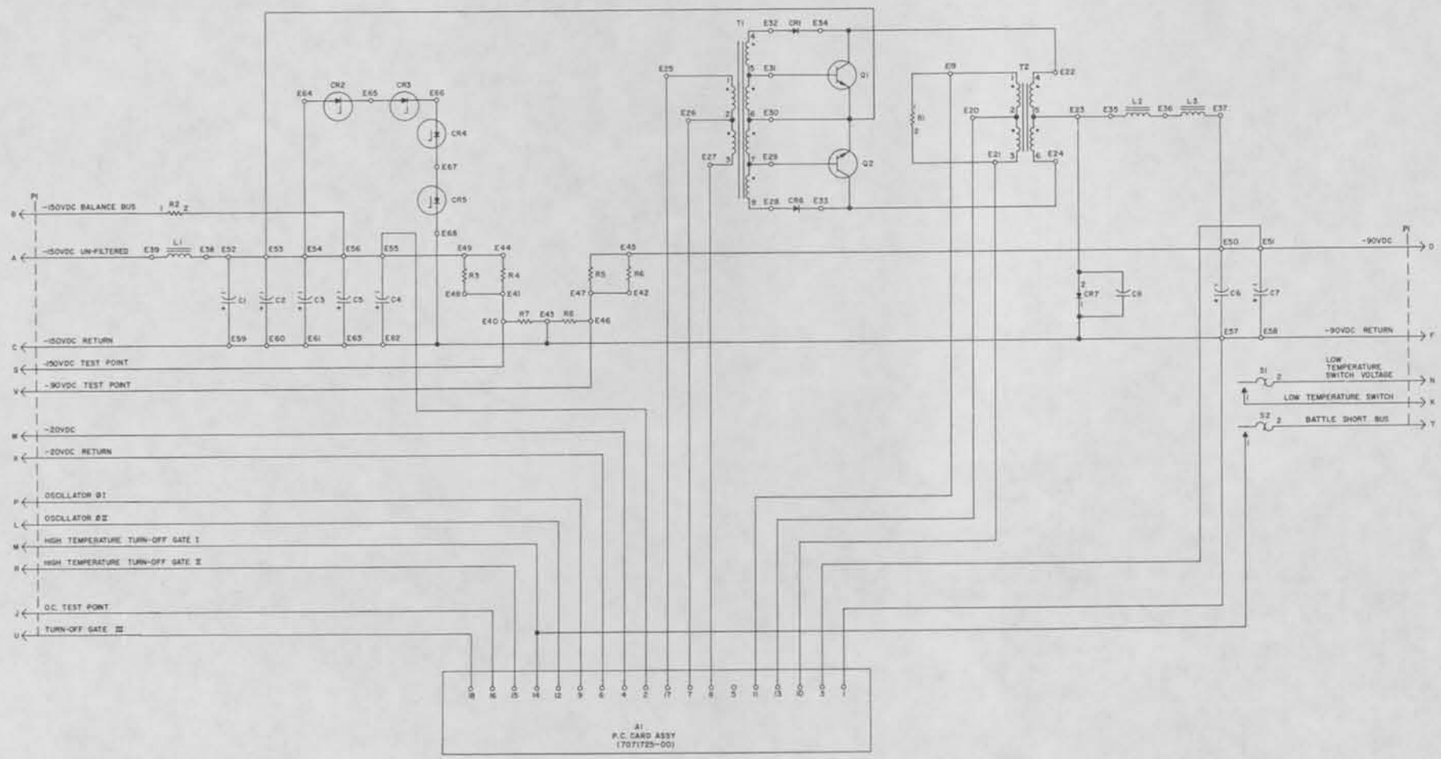

-90V SWITCHING REGULATOR

SIZE	CODE IDENT	DWG NO.
E	90536	7071720
SCALE	CLASS A	SHEET 2

DWG NO 7071720

UD1-2535C

REVISIONS						
ZONE	LTR	EIR	DESCRIPTION -- FOR DETAILS SEE EIR	CHK	DATE	APPRO/ED
	A	22434	SEE EIR		6-29-69	

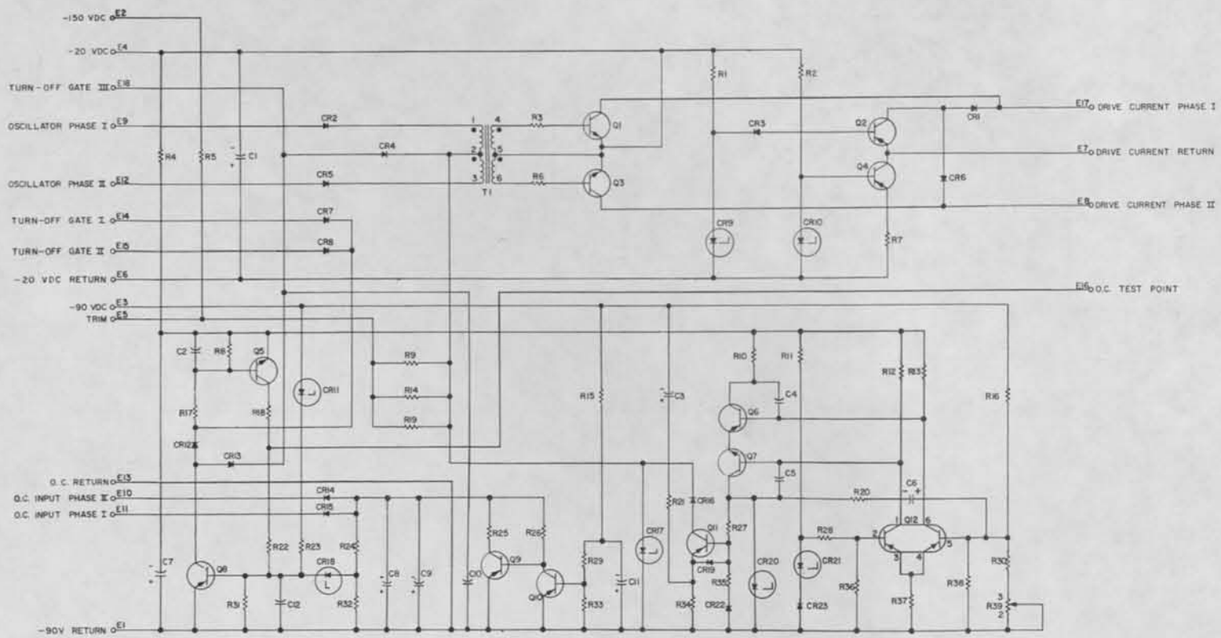

-90V SWITCHING REGULATOR CIRCUIT CARD ASSEMBLY

ELEC. ENGR		DATE
APPROVAL		
NEXT ASSY	USED ON	
APPLICATION		

UNLESS OTHERWISE SPECIFIED
DIMENSIONS IN INCHES TOL ON
2 PLACE DECIMALS ±
1 PLACE DECIMALS ±
ANGLES ±
HOLE DIA TOL
0 THRU .250 +.003 −.002
.251 THRU .500 ±.005 ±.003
.501 AND LARGER ±.010 ±.005
THREADS: EST CL 2A, INT CL 2B

CONTRACT NO.
LAYOUT D. CUMMINGS 1-23-68
DRAWN D. CUMMINGS 1-23-68
CHECKED 1-15-68
ENGR A. RIEBE 1-8-68
ENGR
APPROVED 4/9/68
RELIABILITY

FOR MATL REQUIREMENTS SEE PL

UNIVAC DEFENSE SYSTEMS DIVISION
SPERRY RAND CORPORATION · UNIVAC PARK, ST. PAUL, MINN. 55116

TITLE
CIRCUIT CARD ASSEMBLY—
-90V SWITCHING REGULATOR

SIZE	CODE IDENT NO	DWG NO
E	90536	7071725

SCALE | CLASS A | SHEET 2 OF

DO NOT SCALE THIS PRINT

DWG NO 7071725

CHANGE 2

A 2115 Rev 3-67

REVISIONS						
ZONE	LTR	EIR	DESCRIPTION	CHK	DATE	APPROVED
	B	002807	CONVERTED TO CLASS A			

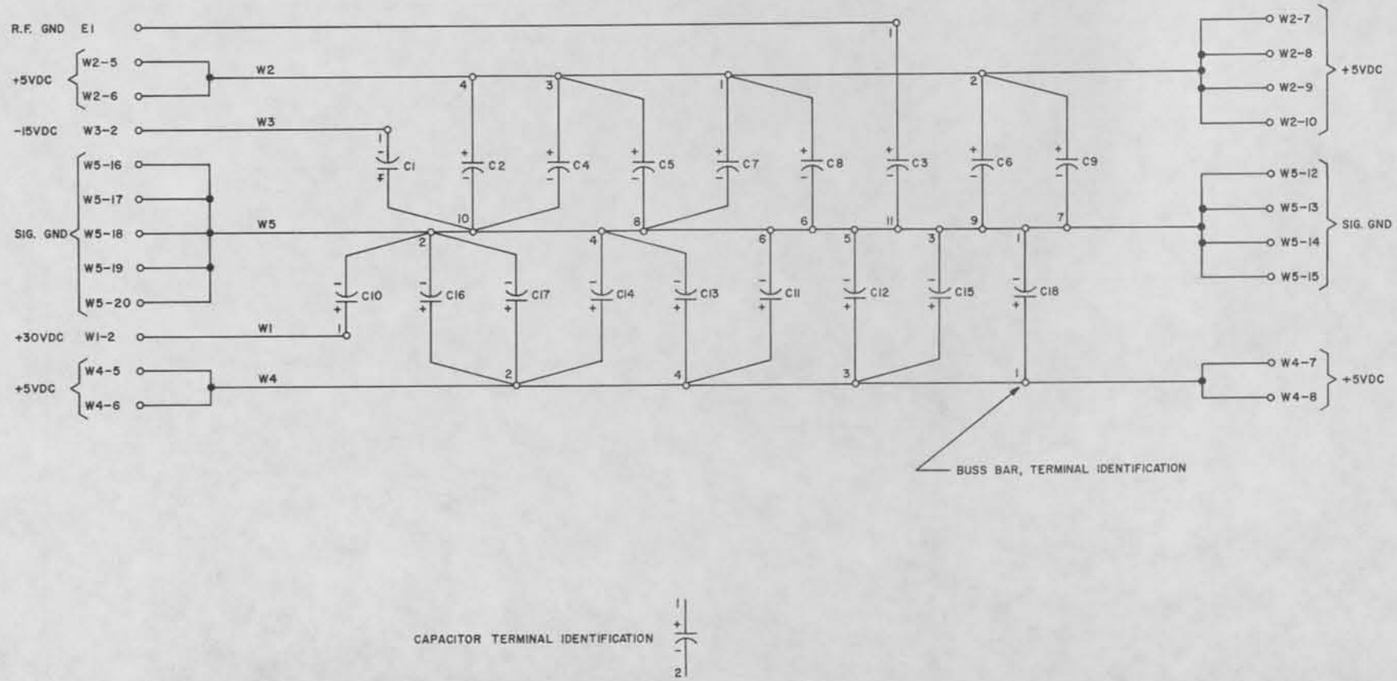

DWG. NO. 7071800

FILTER ASSEMBLY

SIZE	CODE IDENT	DWG NO.
D	90536	7071800
SCALE	CLASS A	SHEET 2

CHANGE 2

UD1-2534C

REVISIONS						
ZONE	LTR	EIR	DESCRIPTION – FOR DETAILS SEE EIR	CHK	DATE	APPROVED
	C	22293	SEE EIR		11-23-68	
	F	D02505	CONVERT TO CLASS A		11-6-70	

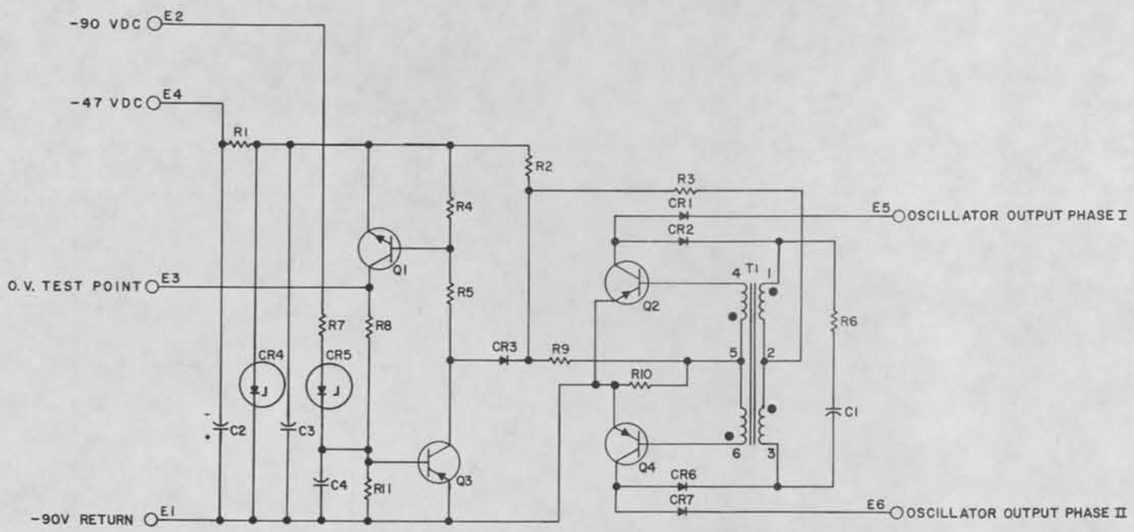

CHANGE 2

DC-TO-DC CONVERTER OSCILLATOR ASSEMBLY

SIZE	CODE IDENT NO.	DWG NO.
D	90536	7071812

SCALE | SHEET 2

DO NOT SCALE THIS PRINT

7071812

REVISIONS						
ZONE	LTR	EIR	DESCRIPTION — FOR DETAILS SEE EIR	CHK	DATE	APPROVED
	B	22166	SEE EIR			
	C	22341	SEE EIR			

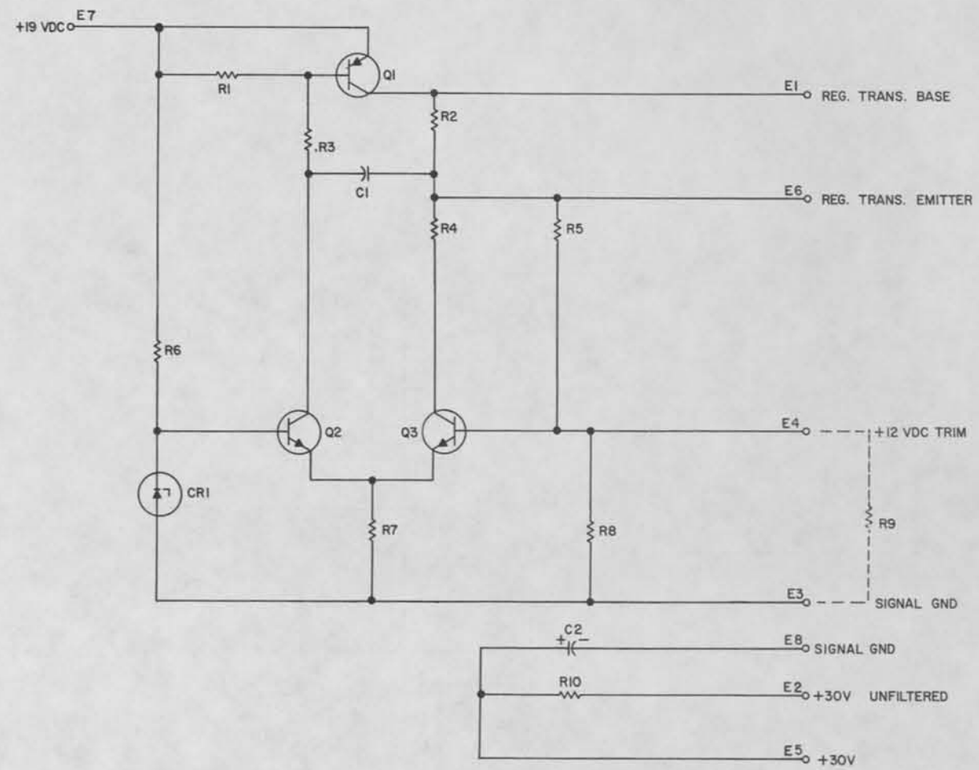

CHANGE 2

TYPE B CONVERTER REGULATOR ASSEMBLY

SIZE	CODE IDENT NO.	DWG NO.
D	90536	7071881
SCALE		SHEET 2

DO NOT SCALE THIS PRINT

A-8560

REVISIONS						
ZONE	LTR	EIR	DESCRIPTION	CHK	DATE	APPROVED
	C	002612	CONVERTED TO CLASS A			

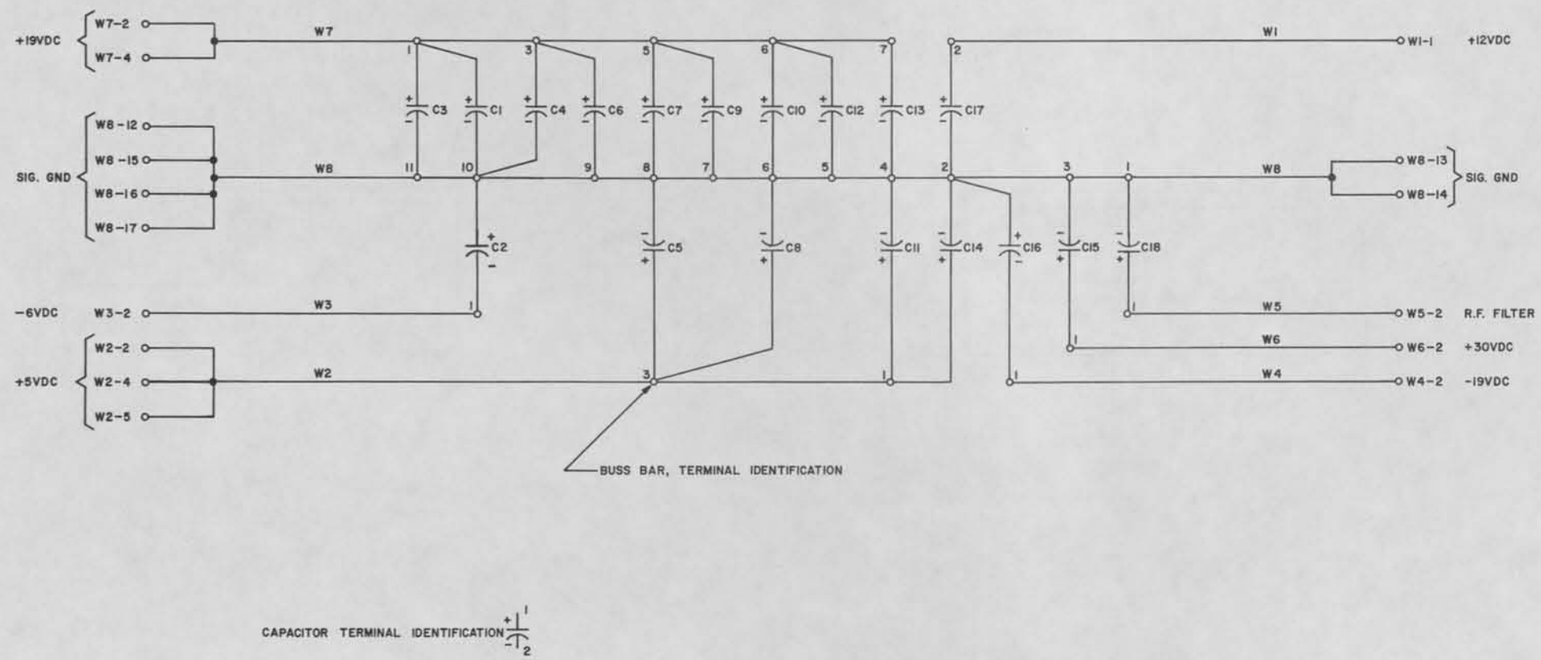

CHANGE 2

FILTER ASSEMBLY

SIZE	CODE IDENT	DWG NO.
D	90536	7071896
SCALE	CLASS A	SHEET 2

DWG. NO. 7071896

UD1-2534C

REVISIONS						
ZONE	LTR	EIR	DESCRIPTION	CHK	DATE	APPROVED
	B	D00260	CONVERTED TO CLASS A			
	C	D08713	SEE EIR	RB	7-13-73	

NOTE:

1. APPLY ITEM 5 TO THREADS OF ITEM 4 BEFORE ASSEMBLY.
2. FOR WIRING INFORMATION SEE ITEM 6.
3. SOLDER PER ITEM S01 USING ITEM 7.
4. RUBBER STAMP PART NUMBER PER ITEM S02 AND COVER COAT WITH ITEM 8. LOCATE APPROXIMATELY AS SHOWN.
5. REFERENCE DESIGNATIONS ARE FOR REFERENCE ONLY AND DO NOT NECESSARILY APPEAR ON PART.

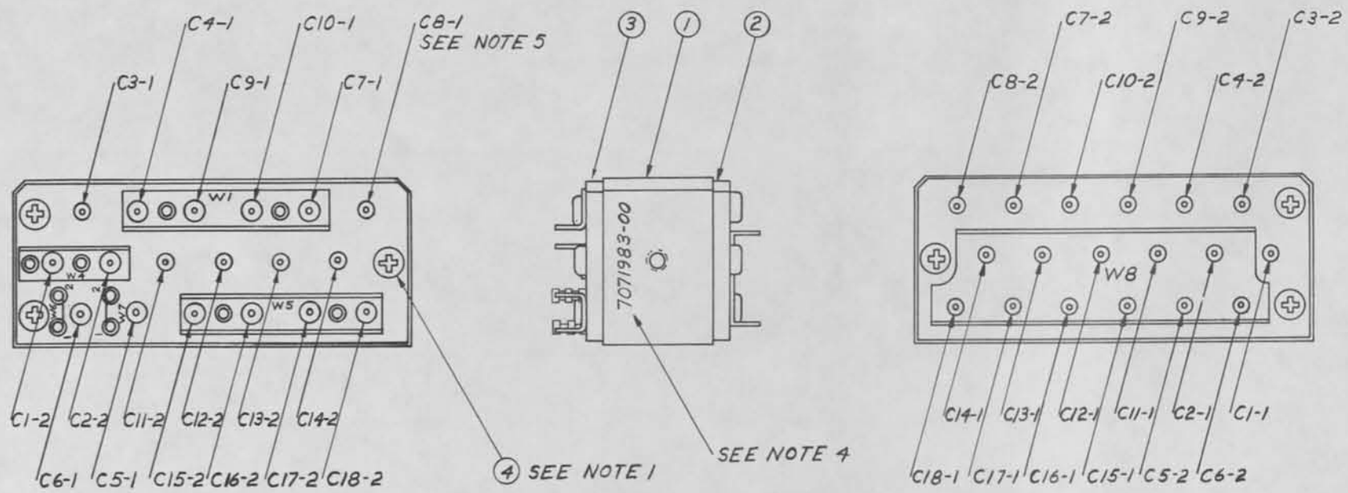

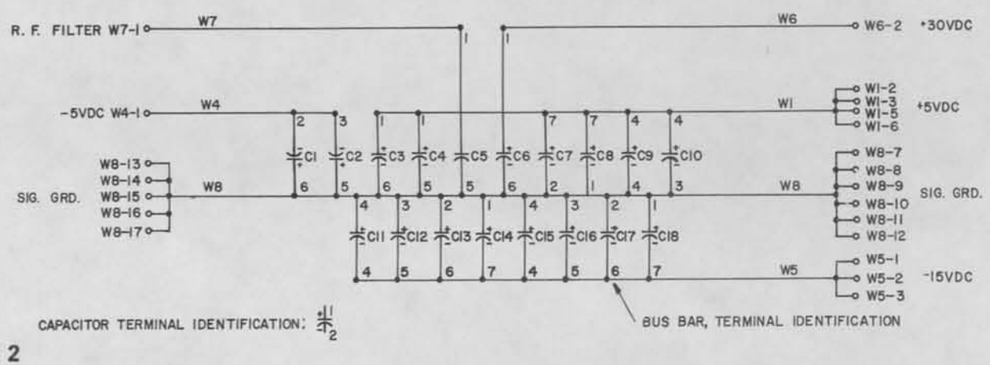

CHANGE 2

ELEC ENGR. A. Beat	DATE 11-17-69
APPROVAL C.E. Riele	11-17-69

PART NO. 7071983-00

FOR MATL REQUIREMENTS SEE PL

UNLESS OTHERWISE SPECIFIED

DIMENSIONS IN INCHES TOL ON

2 PLACE DECIMALS	3 PLACE DECIMALS	ANGLES
± /	± /	± /

HOLE DIA TOL

0 THRU .250	.251 THRU .500	.501 AND LARGER
+ .003 − .002	+ .005 − .003	+ .010 − .005

THREADS: EXT CL 2A, INT CL 2B

NEXT ASSY	USED ON
APPLICATION	

CONTRACT NO.

LAYOUT	D. ERICKSON	12-20-68
DRAWN	R. THOMSEN	8-26-69
CHECKED		11-6-69
ENGR	A. HOLM	
ENGR		
APPROVED		11-13-69

UNIVAC | FEDERAL SYSTEMS DIVISION
UNIVAC PARK, ST. PAUL, MINN. 55116

TITLE FILTER ASSY

SIZE	CODE IDENT	DWG NO.
D	90536	7071983

SCALE 2/1 | CLASS A | SHEET | OF

SPERRY RAND

DWG. NO. 7071983

UD 1-8534

REVISIONS					
ZONE	LTR	EIR	DESCRIPTION	CHK	DATE	APPROVED
	J	D10003	SHEET ADDED		7-9-73	

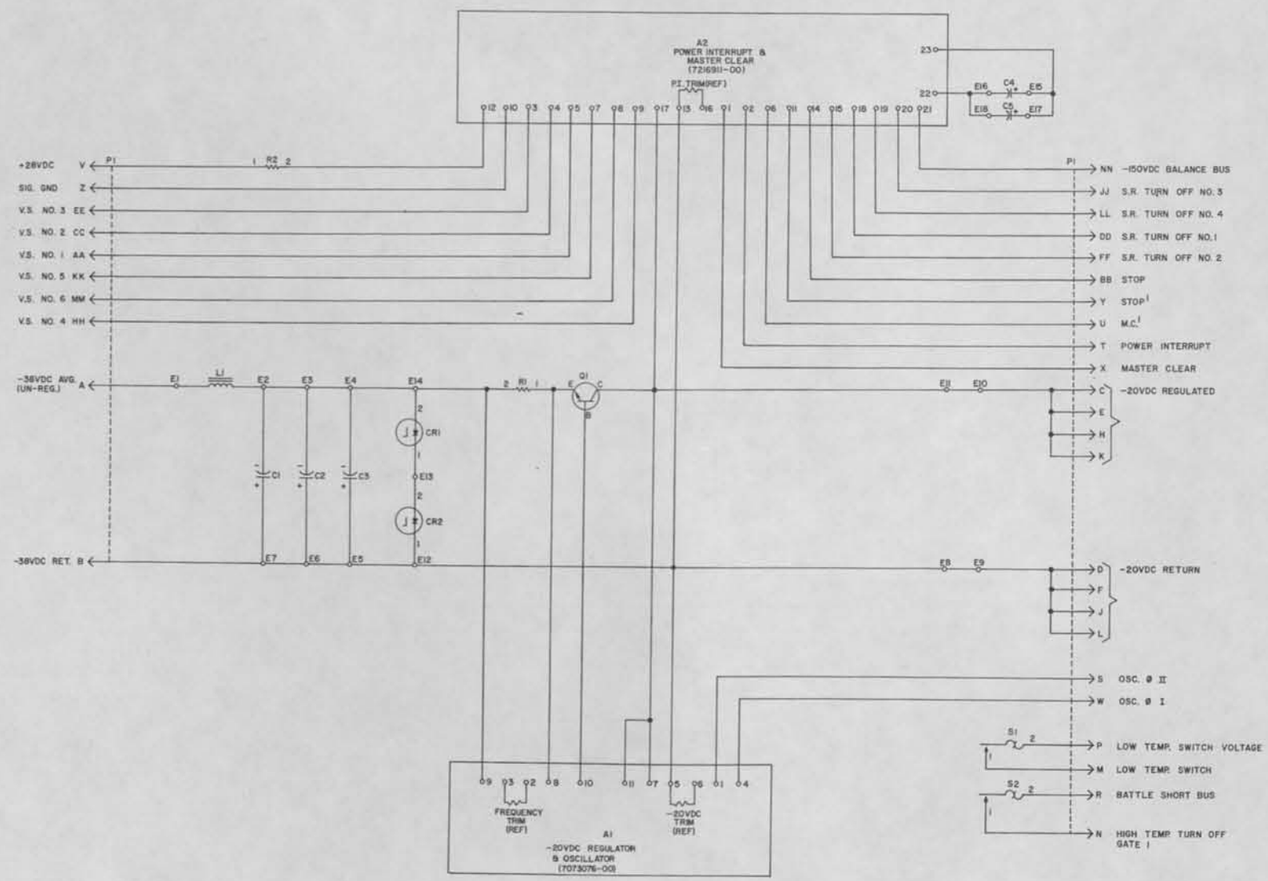

FOR 7073075-01 ONLY

DWG NO. 7073075

CHANGE 2

-20V REGULATOR OSCILLATOR

SIZE	CODE IDENT	DWG NO.
E	90536	7073075
SCALE	CLASS A	SHEET 3

UD1-2533C

ZONE	LTR	EIR	DESCRIPTION — FOR DETAILS SEE EIR	CHK	DATE	APPROVED
	A	20029	SEE EIR 20029			
	B	22208	SEE EIR			

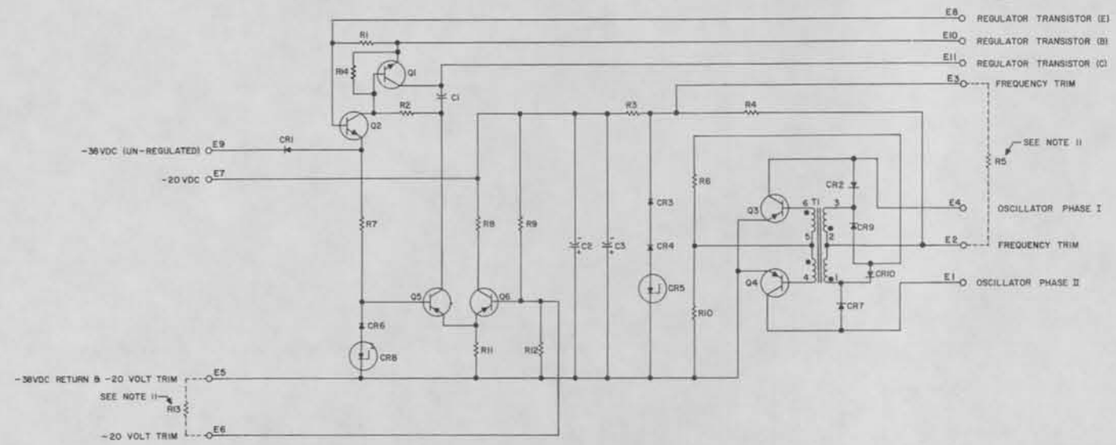

-20V REGULATOR AND OSCILLATOR CIRCUIT CARD ASSEMBLY

SIZE	CODE IDENT NO.	DWG NO.
E	90536	7073076

SCALE | CLASS A | SHEET 2 OF

DO NOT SCALE THIS PRINT

DWG NO. 7073076

A-2113 Rev 3-67

REVISIONS					
ZONE	LTR	EIR	DESCRIPTION	CHK	DATE	APPROVED
	M	D10003	SHEET ADDED			

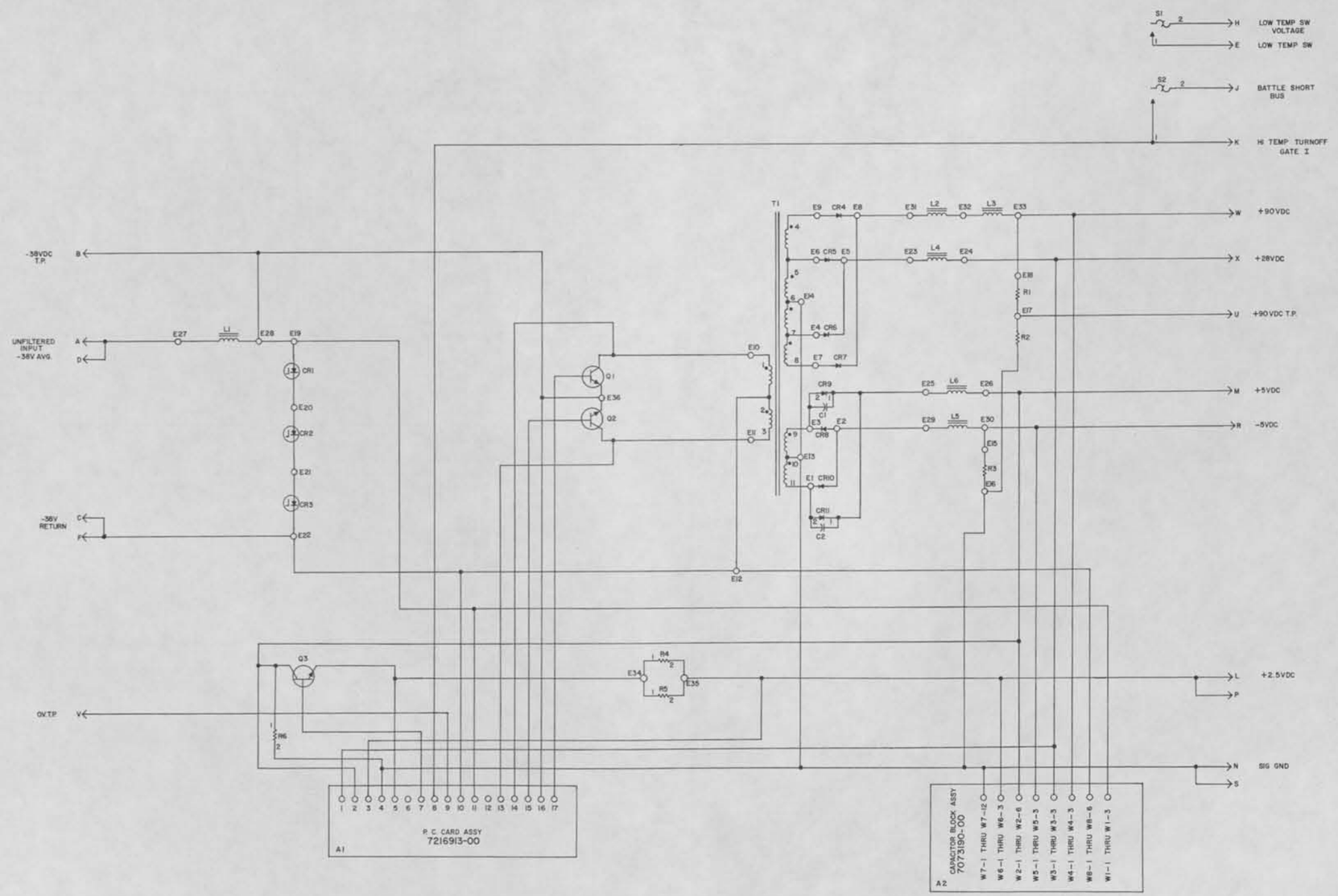

CHANGE 2

REGULATING CONVERTER ASSEMBLY

SIZE	CODE IDENT	DWG NO.
E	90536	7073175
SCALE	CLASS A	SHEET 4

DWG. NO. 7073175

U01-3533C

REVISIONS						
ZONE	LTR	EIR	DESCRIPTION	CHK	DATE	APPROVED
	C	002817	CONVERTED TO CLASS A			

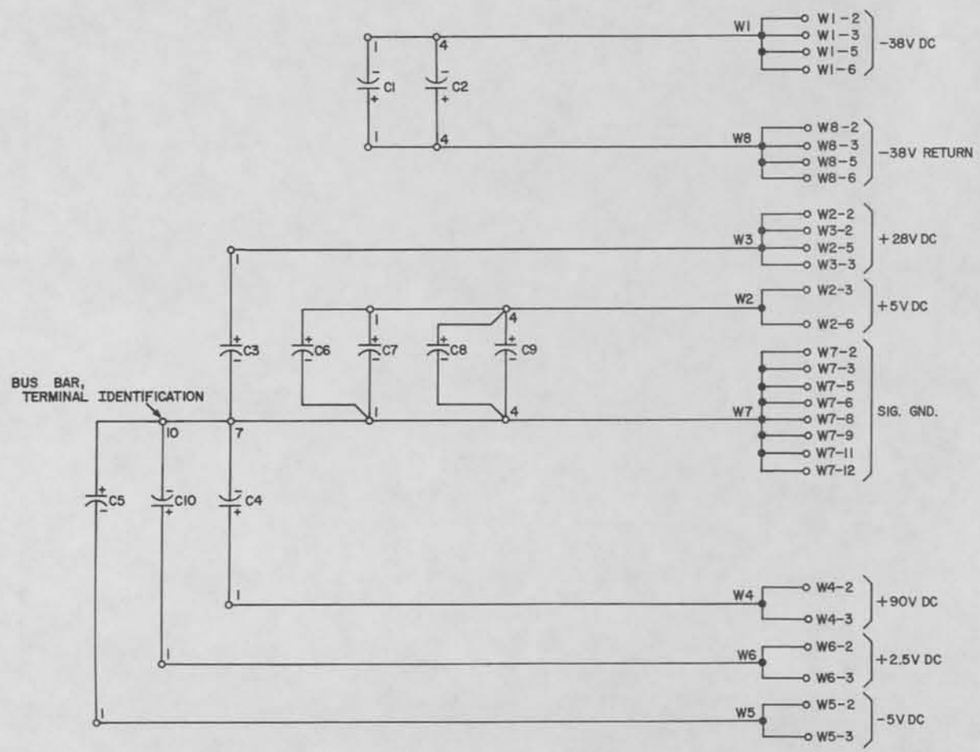

ASSEMBLY CAPACITOR BLOCK

SIZE	CODE IDENT	DWG NO.
D	90536	7073190
SCALE	CLASS A	SHEET 2

DWG. NO. 7073190

UD1-2534C

REVISIONS						
ZONE	LTR	EIR	DESCRIPTION	CHK	DATE	APPROVED

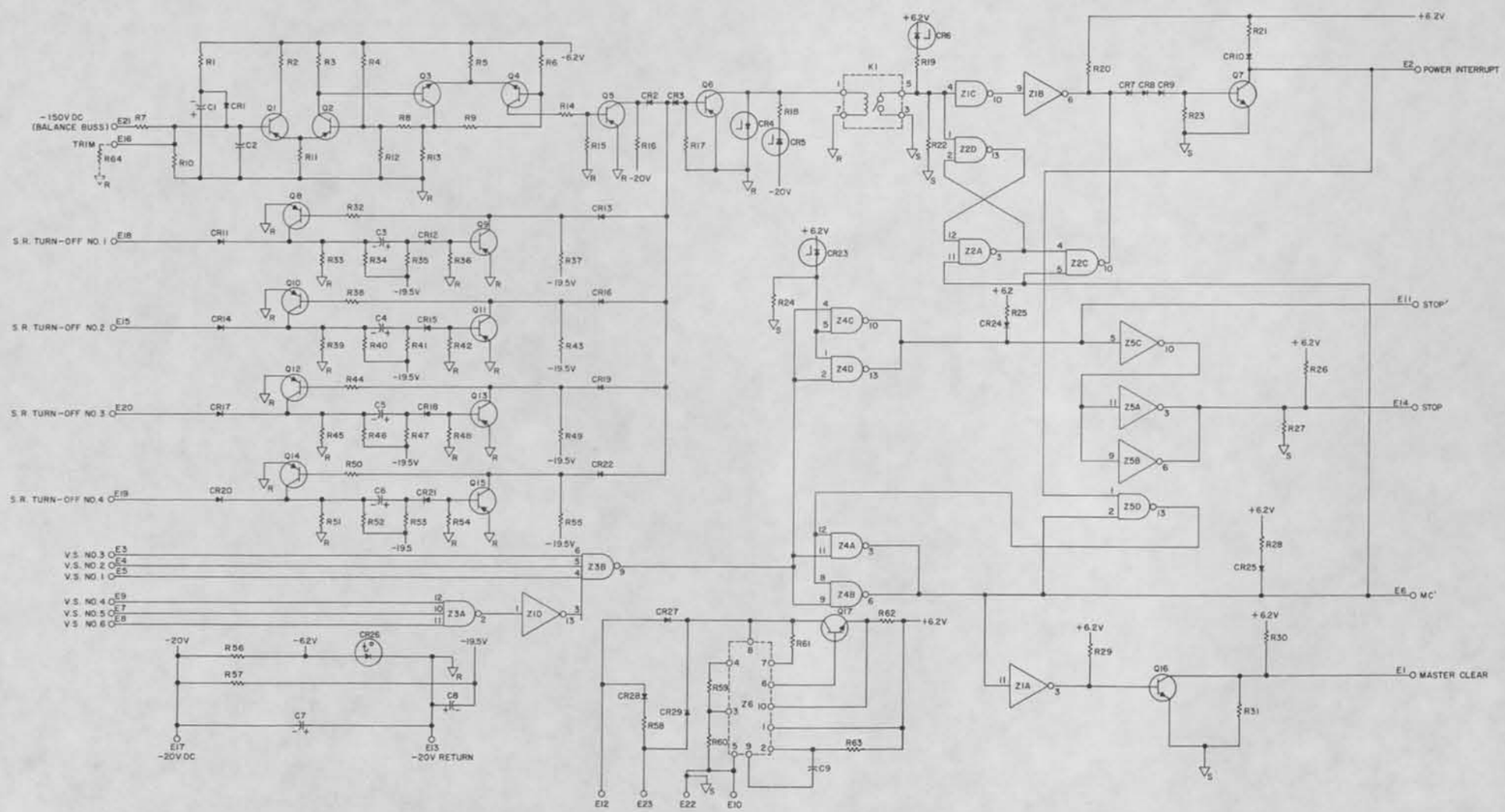

CHANGE 2

POWER INTERRUPT AND MASTER CLEAR

SIZE	CODE IDENT	DWG NO.
E	90536	7216911
SCALE	FORM 3	SHEET 2

UDI-2535C

DWG NO 7216911

REVISIONS						
ZONE	LTR	EIR	DESCRIPTION	CHK	DATE	APPROVED

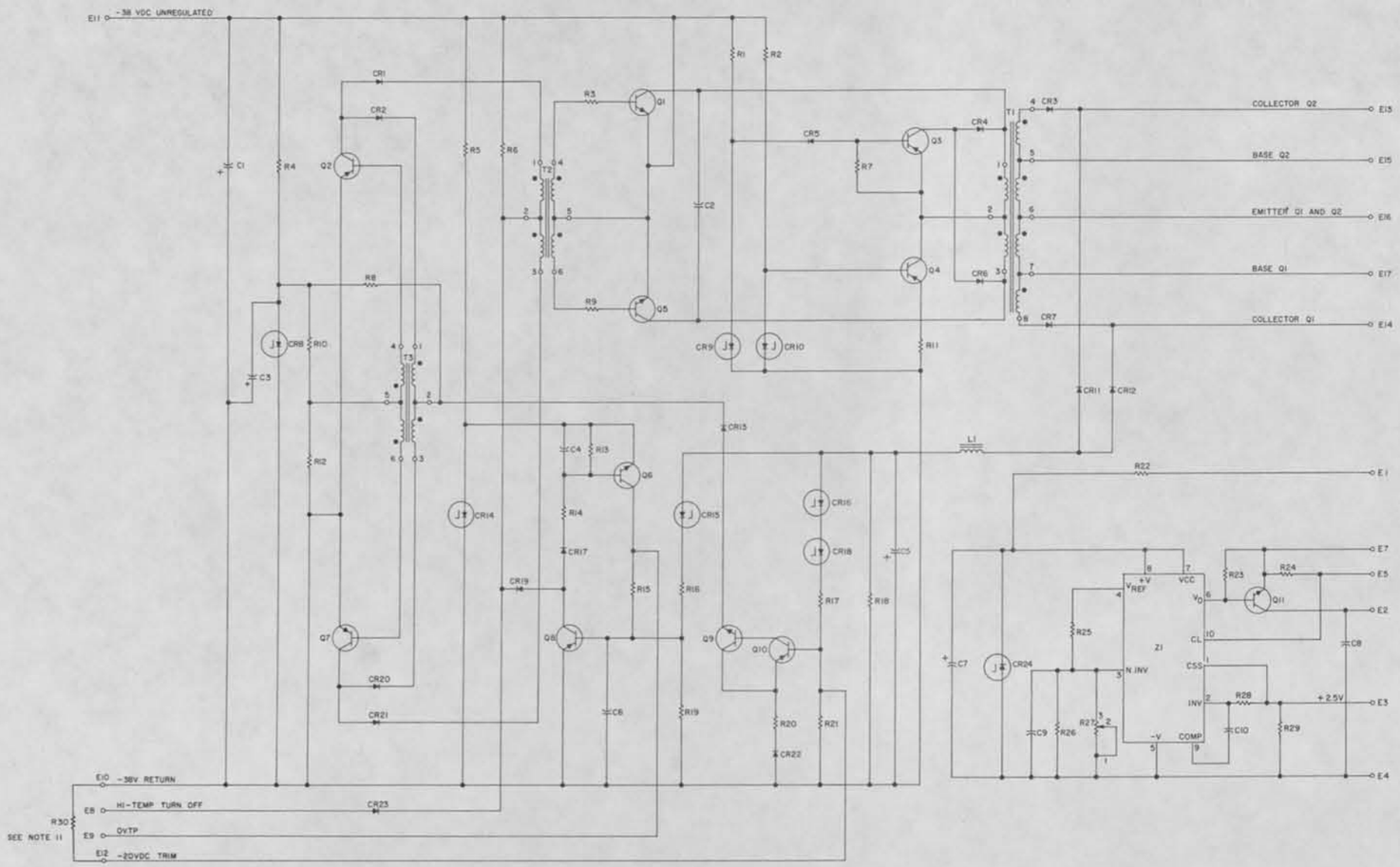

CHANGE 2

REGULATING CONVERTER CIRCUIT CARD ASSEMBLY

SIZE	CODE IDENT	DWG NO.
E	90536	7216913
SCALE	CLASS A	SHEET 2

DWG NO 7216913

UDI 2535C

REVISIONS					
ZONE	LTR	EIR	DESCRIPTION	CHK	DATE	APPROVED
	A	DI1201	SEE EIR			

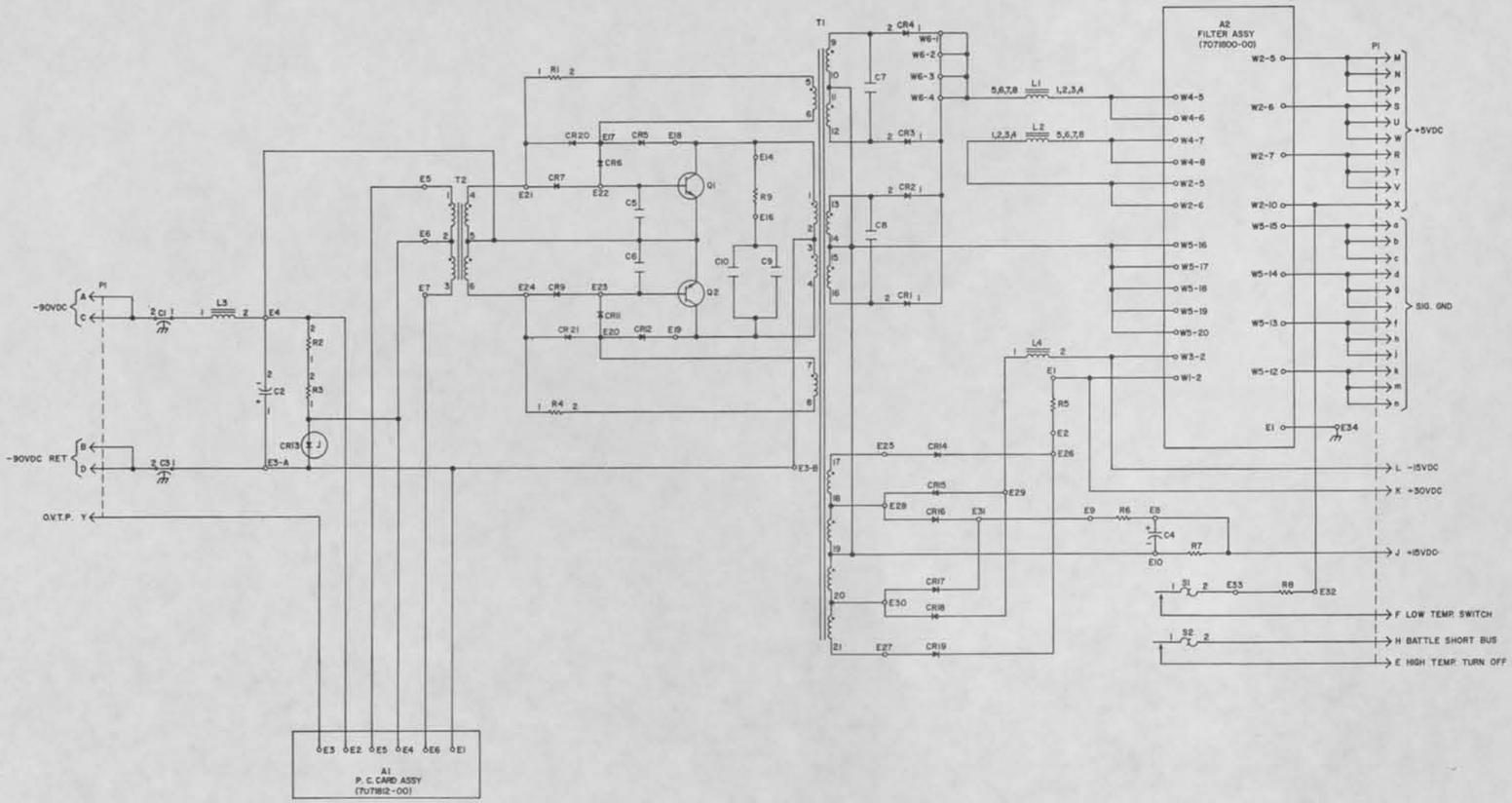

CHANGE 2

DC-TO-DC CONVERTER MODULE ASSEMBLY, TYPE D

SIZE	CODE IDENT	DWG NO.
E	90536	7217069
SCALE —	CLASS A	SHEET 2

DWG NO. 7217069

REVISIONS						
ZONE	LTR	EIR	DESCRIPTION	CHK	DATE	APPROVED

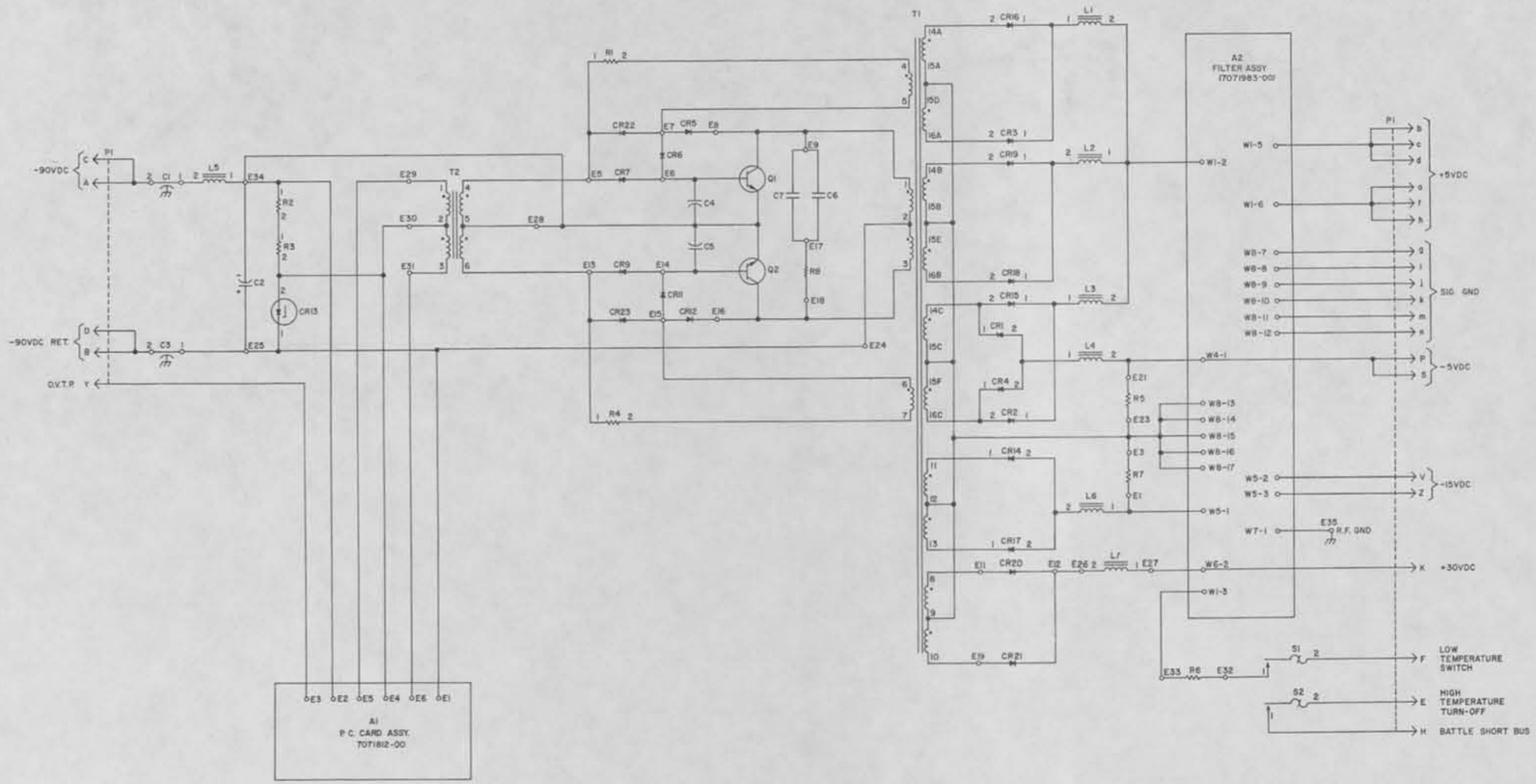

CHANGE 2

DC-TO-DC CONVERTER MODULE ASSEMBLY, TYPE E

SIZE	CODE IDENT	DWG NO.
E	90536	7217072
SCALE	CLASS A	SHEET 2

DWG. NO. 7217072

UD1-2533C

REVISIONS					
ZONE	LTR	EIR	DESCRIPTION	CHK	DATE	APPROVED

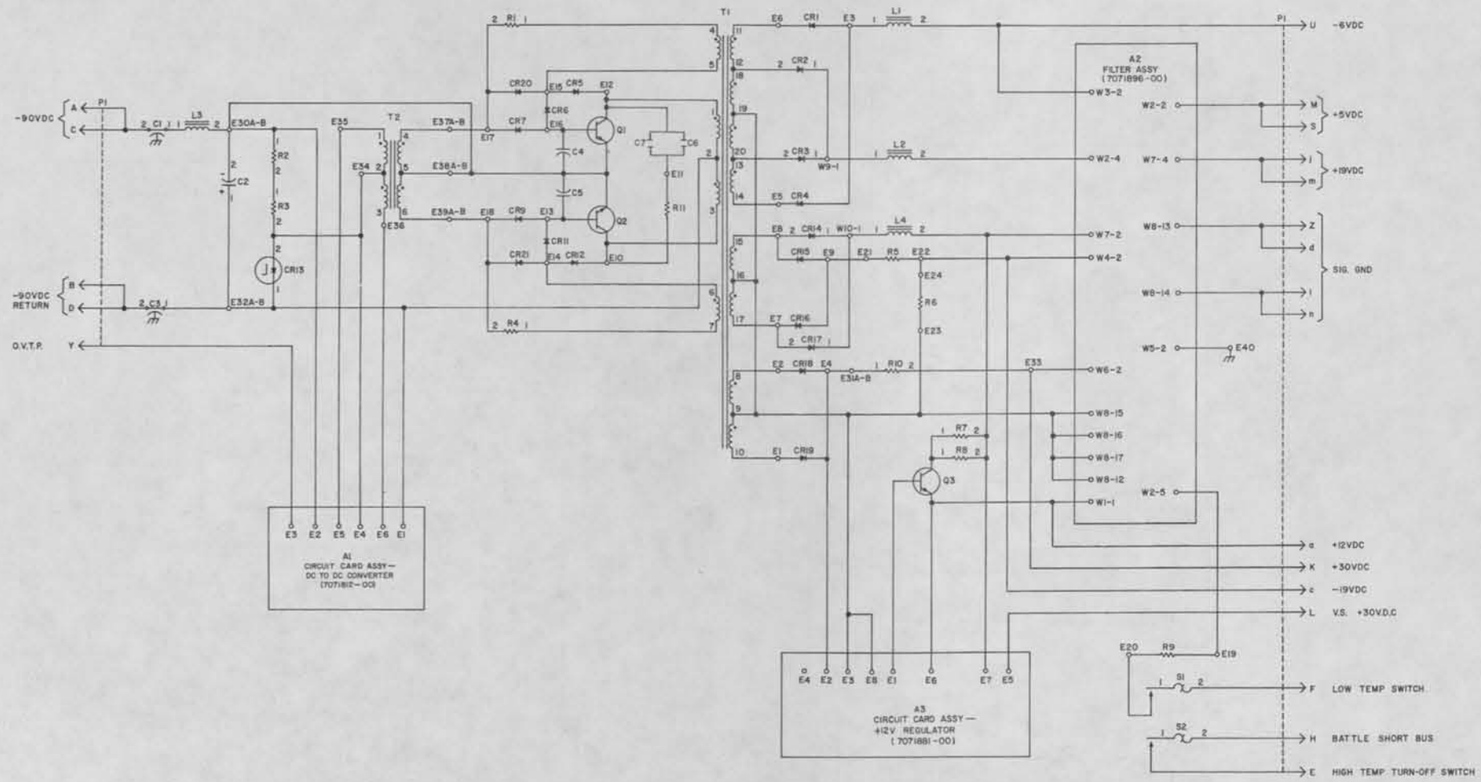

CHANGE 2

DC-TO-DC CONVERTER MODULE ASSEMBLY, TYPE B

SIZE	CODE IDENT	DWG NO.
E	90536	7217074
SCALE	CLASS A	SHEET 2

DWG NO. 7217074

U01-3939C

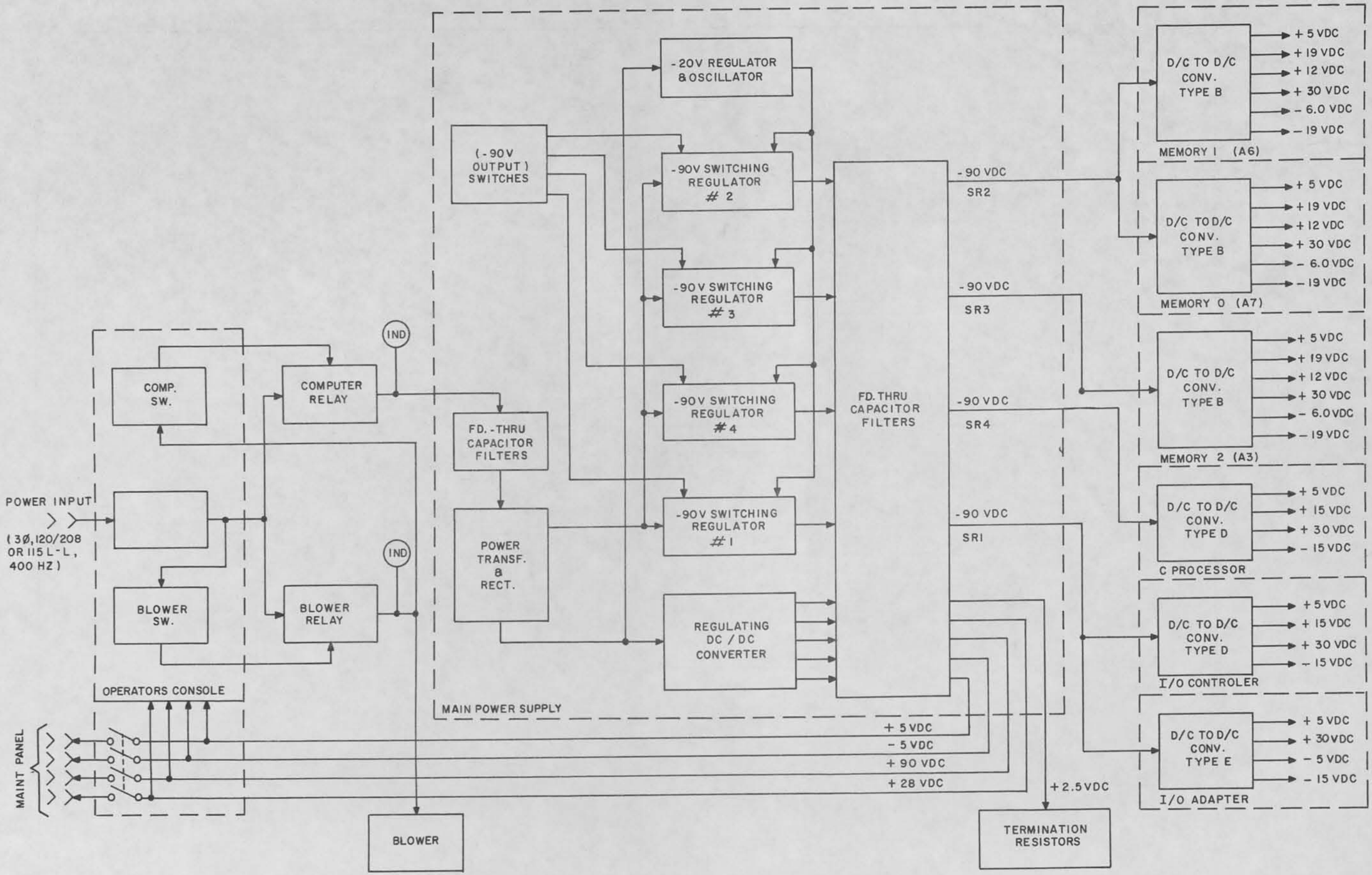

POWER DISTRIBUTION, BLOCK DIAGRAM

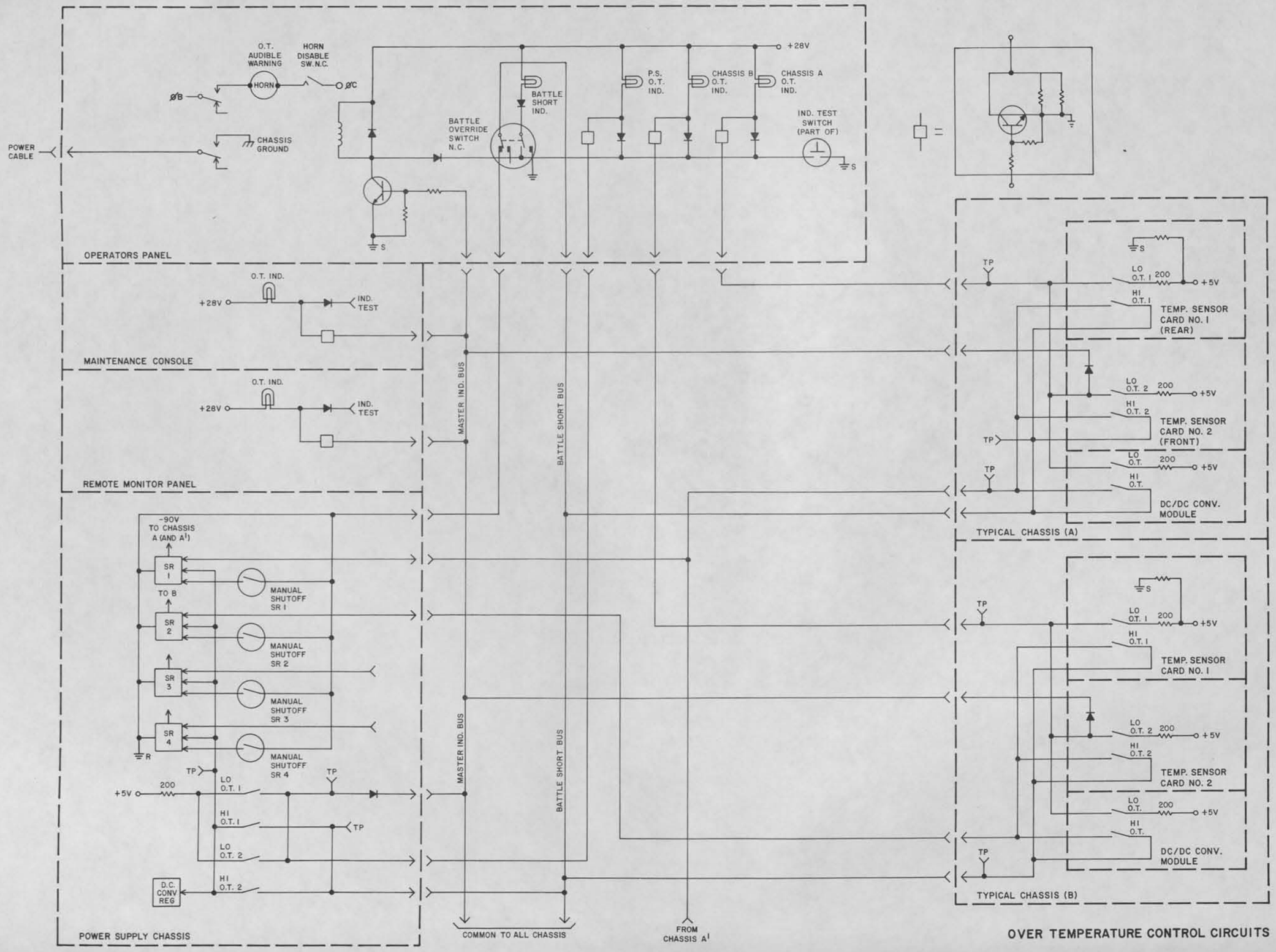

OVER TEMPERATURE CONTROL CIRCUITS

MAINTENANCE
CONSOLE

LIST OF DRAWINGS

MAINTENANCE CONSOLE

Drawing (Sheet)	Title
7073481 (1)	UYK-7 Maintenance Console Schematic
↑ (2)	UYK-7 Maintenance Console Schematic
(3)	UYK-7 Maintenance Console Schematic
↓ (4)	UYK-7 Maintenance Console Schematic
7073481 (5)	UYK-7 Maintenance Console Schematic
7112130 (2)	Printed Circuit Card Schematic
7112135 (2)	Printed Circuit Card Schematic
7112140 (2)	Printed Circuit Card Schematic

MAINTENANCE CONSOLE I/O CONNECTOR TO J05 WIRING DATA

J01 PIN	SIGNAL	J05 PIN
01	Not Used	-
02	Signal Gnd	-
03	Not Used	-
04	Signal Gnd	-
05	Not Used	-
06	Signal Gnd	-
07	Not Used	-
08	Signal Gnd	-
09	CP Rgtr Bit 29	A-14
10	Signal Gnd	-
11	Not Used	-
12	CP Rgtr Bit 28	A-18
13	CP Rgtr Bit 27	A-22
14	CP Rgtr Bit 26	A-26
15	Signal Gnd	-
16	CP Rgtr Bit 25	A-32
17	CP Rgtr Bit 24	A-36
18	CP Rgtr Bit 23	A-40
19	CP Rgtr Bit 22	A-44
20	CP Rgtr Bit 21	A-48
21	CP Rgtr Bit 20	A-52
22	Signal Gnd	-
23	CP Rgtr Bit 19	A-56
24	CP Rgtr Bit 18	B-6
25	Signal Gnd	-
26	CP Rgtr Bit 17	B-10
27	Not Used	-
28	Signal Gnd	-
29	CP Rgtr Bit 16	B-14
30	CP Rgtr Bit 15	B-18
31	Signal Gnd	-
32	CP Rgtr Bit 14	B-22
33	CP Rgtr Bit 13	B-26
34	CP Rgtr Bit 12	B-32
35	CP Rgtr Bit 11	B-36
36	Signal Gnd	-
37	CP Rgtr Bit 10	B-40
38	CP Rgtr Bit 9	B-44
39	CP Rgtr Bit 8	B-48
40	CP Rgtr Bit 7	B-52
41	CP Rgtr Bit 6	B-56
42	Signal Gnd	-
43	CP Rgtr Bit 5	D-6
44	CP Rgtr Bit 4	D-10
45	Signal Gnd	-
46	CP Rgtr Bit 3	D-14

J01 PIN	SIGNAL	J05 PIN
47	CP Rgtr Bit 2	D-18
48	Signal Gnd	-
49	Not Used	-
50	CP Rgtr Bit 1	D-22
51	CP Rgtr Bit 0	D-26
52	Signal Gnd	-
53	CP Rgtr Bit 30	A-10
54	CP Rgtr Bit 31	A-02
55	Not Used	-
56	Signal Gnd	-
57	Not Used	-
58	Not Used	-
59	Not Used	-
60	Signal Gnd	-
61	Not Used	-
62	Not Used	-
63	Not Used	-
64	Signal Gnd	-
65	Not Used	-
66	Not Used	-
67	Not Used	-
68	Not Used	-
69	Not Used	-
70	Signal Gnd	-
71	Not Used	-
72	Not Used	-
73	Not Used	-
74	Signal Gnd	-
75	Not Used	-
76	Not Used	-
77	Not Used	-
78	Not Used	-
79	Signal Gnd	-
80	Not Used	-
81	Not Used	-
82	Signal Gnd	-
83	Not Used	-
84	Signal Gnd	-
85	Not Used	-

J02 PIN	SIGNAL	J05 PIN
01	DISC RTC	F-34
02	Signal Gnd	-

J02 PIN	SIGNAL	J05 PIN
03	Breakpoint Prog	F-44
04	Signal Gnd	-
05	DISC B7	F-46
06	Signal Gnd	-
07	DISC P	F-48
08	Signal Gnd	-
09	Not Used	-
10	Signal Gnd	-
11	Not Used	-
12	Spare Switch	E-30
13	Panel Select	F-32
14	Test	F-50
15	Stop 5 Select	G-44
16	Stop 6 Select	G-46
17	Stop 7 Select	G-48
18	Jump 1	G-38
19	Jump 2	G-40
20	Jump 3	G-42
21	Signal Gnd	-
22	Master Clear	E-34
23	Signal Gnd	-
24	Master Clear IOC	F-42
25	Signal Gnd	-
26	Stop	G-50
27	Bootstrap 1	G-30
28	Signal Gnd	-
29	Not Used	-
30	Console Select 2 Clear	J-04
31	Not Used	-
32	CP Rgtr Clear	J-05
33	Console Select CM Clear	J-06
34	Signal Gnd	-
35	Not Used	-
36	Not Used	-
37	Console Sequence Clear	J-07
38	Not Used	-
39	Not Used	-
40	Not Used	-
41	Signal Gnd	-
42	Ind P	J-52
43	Spare	E-30
44	Ind CM	J-51
45	Signal Gnd	-
46	Ind R	J-50
47	Not Used	-
48	Signal Gnd	-

J02 PIN	SIGNAL	J05 PIN
49	Bootstrap 2	G-32
50	Not Used	-
51	Ind U	J-47
52	Signal Gnd	-
53	Ind Y	J-49
54	Ind Q	J-12
55	Signal Gnd	-
56	Ind M	J-14
57	Not Used	-
58	Select Run Mode IO	*
59	Not Used	-
60	Signal Gnd	-
61	Ind D	J-08
62	Start - Neutral CP	F-30
63	Phase Mode IOC	*
64	Request Store	*
65	Instruction Indicate	*
66	Buffer Indicate	*
67	Execute Indicate	*
68	Not Used	-
69	Start - Neutral IOC	F-38
70	Signal Gnd	-
71	Start IOC	F-36
72	Signal Gnd	-
73	Auto Recovery	G-34
74	Signal Gnd	-
75	Not Used	-
76	Not Used	-
77	Start CP	F-52
78	LSO CP	E-32
79	Not Used	-
80	Not Used	-
81	Not Used	-
82	Signal Gnd	-
83	Auto Recovery Manual	G-36
84	Signal Gnd	-
85	LSO IOC	F-40

J03 PIN	SIGNAL	J05 PIN
01	Not Used	-
02	Signal Gnd	-
03	Not Used	-
04	Signal Gnd	-

* Wired directly from switch or indicator to external connector.

MAINTENANCE CONSOLE I/O CONNECTOR TO J05 WIRING DATA (CONT)

J03 PIN	SIGNAL	J05 PIN
05	Not Used	-
06	Signal Gnd	-
07	Not Used	-
08	Signal Gnd	-
09	Mode Select Run CP	J-53
10	Signal Gnd	-
11	Not Used	-
12	Mode Sel Inst CP	J-54
13	Mode Sel Seq CP	J-55
14	Sel Phase CP	J-56
15	Signal Gnd	-
16	Cons Select Bit 0	*
17	Cons Select Bit 1	*
18	Cons Select Bit 2	*
19	Cons Select Bit 3	*
20	Cons Select Bit 4	*
21	Cons Select Bit 5	*
22	Signal Gnd	-
23	IOC CML	*
24	IOC CMP	*
25	Not Used	-
26	Not Used	-
27	Not Used	-
28	Signal Gnd	-
29	Not Used	-
30	Not Used	-
31	Not Used	-
32	Not Used	-
33	Signal Gnd	-
34	Not Used	-
35	Signal Gnd	-
36	Not Used	-
37	Main Timing 31	*
38	Main Timing 21	*
39	Main Timing 11	*
40	Signal Gnd	-
41	IOC Bit 19	*
42	IOC DIRU	*
43	IOC Rgtr Clear	J-01
44	IOC DIRL	*
45	IOC Select 2	*
46	Signal Gnd	-
47	Not Used	-
48	Signal Gnd	-
49	Not Used	-

J03 PIN	SIGNAL	J05 PIN
50	Not Used	-
51	Signal Gnd	-
52	KU 4	*
53	AKU 1	*
54	Signal Gnd	-
55	AKU 2	*
56	AKU 3	*
57	AKU 4	*
58	Rgtr Select P	J-52
59	Not Used	-
60	Rgtr Select CM	J-51
61	Rgtr Select R	J-50
62	Signal Gnd	-
63	Not Used	-
64	Not Used	-
65	Rgtr Select U	J-47
66	Rgtr Select Y	J-49
67	Rgtr Select Q	J-12
68	Rgtr Select M	J-14
69	Signal Gnd	-
70	Not Used	-
71	Rgtr Select D	J-08
72	Signal Gnd	-
73	Not Used	-
74	Signal Gnd	-
75	Mode Ind Run CP	J-53
76	Mode Ind Inst CP	J-54
77	Mode Ind Seq CP	J-55
78	Signal Gnd	-
79	Ind Phase CP	J-56
80	Not Used	-
81	Not Used	-
82	Signal Gnd	-
83	Mode Sequence IOC	*
84	Scan	*
85	Not Used	-

J04 PIN	SIGNAL	J05 PIN
01	+90 Vdc	*
02	Signal Gnd	-
03	+5 Vdc	*
04	Signal Gnd	-
05	-5 Vdc	*

J04 PIN	SIGNAL	J05 PIN
06	Signal Gnd	-
07	Not Used	-
08	Signal Gnd	-
09	+28 Vdc	*
10	Signal Gnd	-
11	Not Used	-
12	Run Ind	*
13	Pwr Fault Ind	*
14	Hdw Fault Ind	*
15	Signal Gnd	-
16	Prog Fault Ind	*
17	On Line Ind	*
18	Breakpoint Stop Ind	*
19	Overtemp Ind	*
20	CM Add 2	*
21	KU 1	*
22	Signal Gnd	-
23	KL 1	*
24	KU 2	*
25	KL 2	*
26	Signal Gnd	-
27	LSO Output	*
28	LSO Rtn	*
29	KU 3	*
30	KL 3	*
31	Stop 4 Ind	*
32	Stop 5 Ind	*
33	Signal Gnd	-
34	Stop 6 Ind	*
35	Stop 7 Ind	*
36	Signal Gnd	-
37	IOC Timing 41	*
38	CM Add 3	*
39	CM Add 4	*
40	IOC Timing 31	*
41	Signal Gnd	-
42	IOC Timing 21	*
43	IOC Timing 11	*
44	Signal Gnd	-
45	IOC Bit 17	*
46	IOC Bit 16	*
47	IOC Bit 15	*
48	Signal Gnd	-
49	Not Used	-

J04 PIN	SIGNAL	J05 PIN
50	IOC Bit 14	*
51	IOC Bit 13	*
52	Signal Gnd	-
53	IOC Bit 12	*
54	IOC Bit 11	*
55	IOC Bit 10	*
56	IOC Bit 9	*
57	Not Used	-
58	Not Used	-
59	IOC Bit 8	*
60	IOC Bit 7	*
61	IOC Bit 6	*
62	IOC Bit 5	*
63	Signal Gnd	-
64	IOC Bit 4	*
65	IOC Bit 3	*
66	CM Add 5	*
67	IOC Bit 2	*
68	IOC Bit 1	*
69	Signal Gnd	-
70	IOC Bit 0	*
71	Seq Cont Ind I	*
72	KL 4	*
73	Not Used	-
74	Signal Gnd	-
75	CM Add 6	*
76	Seq Cont Ind IA	*
77	Seq Cont Ind OP1	*
78	Signal Gnd	-
79	Seq Cont Ind OP2	*
80	Not Used	-
81	Seq Cont Ind Int	*
82	Signal Gnd	-
83	Not Used	-
84	CM Add 0	*
85	CM Add 1	*

	A	B	D	E	F	G	J
Card Type	2130	2130	2130	2135	2135	2135	2140

J05

* Wired directly from switch or indicator to external connector.

REVISIONS						
ZONE	LTR	EIR	DESCRIPTION	CHK	DATE	APPROVED
	A	D01119	SEE EIR		5-21-70	
	B	D02965	SEE EIR		10-26-70	
	C	D04755	SEE EIR		6-14-71	

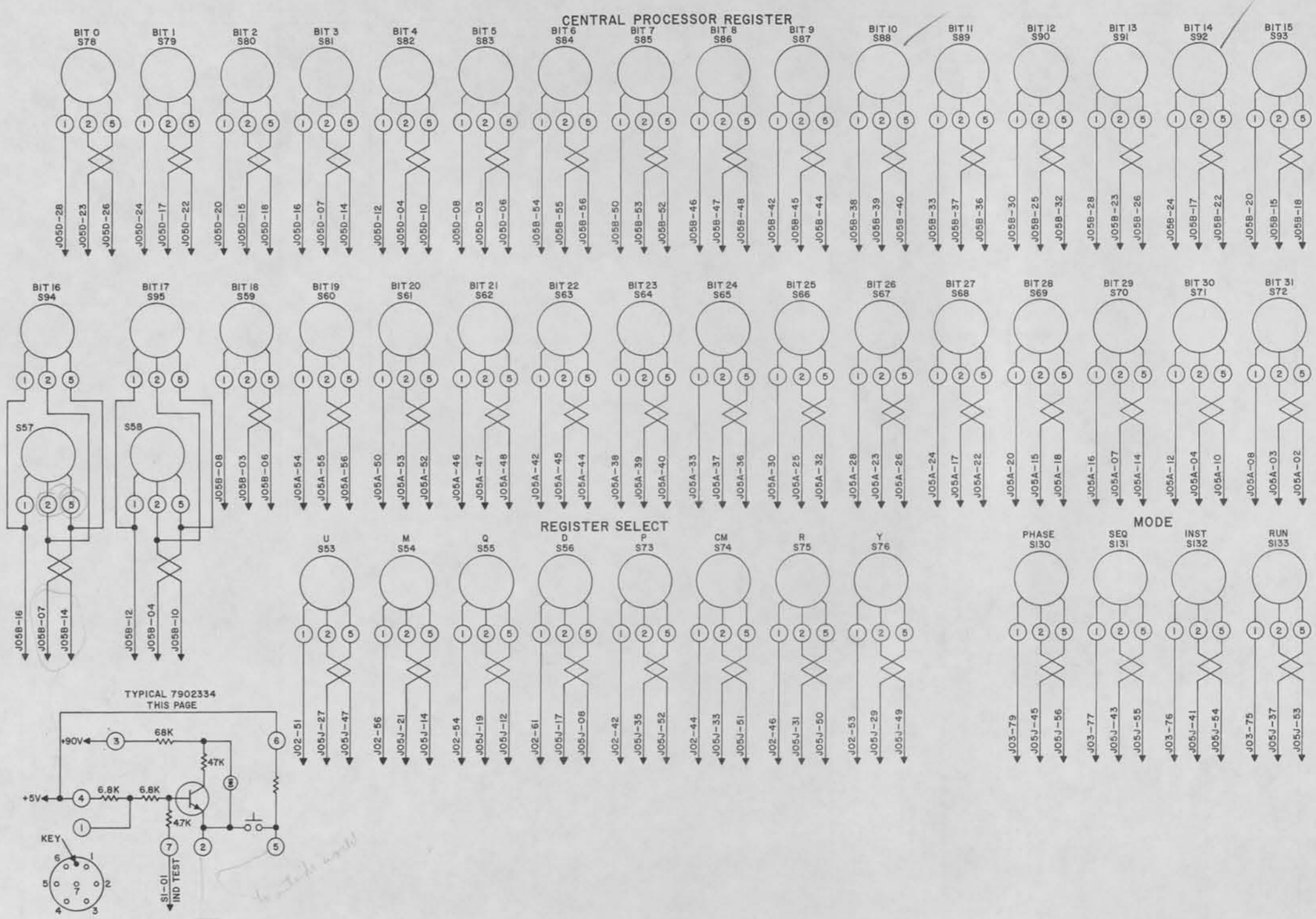

PART NO. 7073481-00

~~FOR MATL REQUIREMENTS SEE PL~~

NEXT ASSY	USED ON		
APPLICATION			

UNLESS OTHERWISE SPECIFIED
DIMENSIONS IN INCHES TOL ON
2 PLACE DECIMALS ± ; 3 PLACE DECIMALS ± ; ANGLES ±
HOLE DIA TOL
0 THRU .250 + .003 − .002 ; .251 THRU .500 + .005 − .003 ; .501 AND LARGER + .010 − .005
THREADS: EXT CL 2A, INT CL 2B

CONTRACT NO.

LAYOUT		
DRAWN	J.A. ROBINSON	10-26-70
CHECKED	KAB	
ENGR		
ENGR		
APPROVED		

UNIVAC | FEDERAL SYSTEMS DIVISION
UNIVAC PARK, ST. PAUL, MINN. 55116

TITLE
ELECTRICAL SCHEMATIC,
TEST SET
UYK-7

SIZE	CODE IDENT	DWG NO.
D	90536	7073481

SCALE — | CLASS A | SHEET | OF 7

SPERRY RAND

DWG. NO. 7073481

UD 1-2534

REVISIONS						
ZONE	LTR	EIR	DESCRIPTION — FOR DETAILS SEE EIR	CHK	DATE	APPROVED
	B	D02965	SEE EIR		10-26-70	

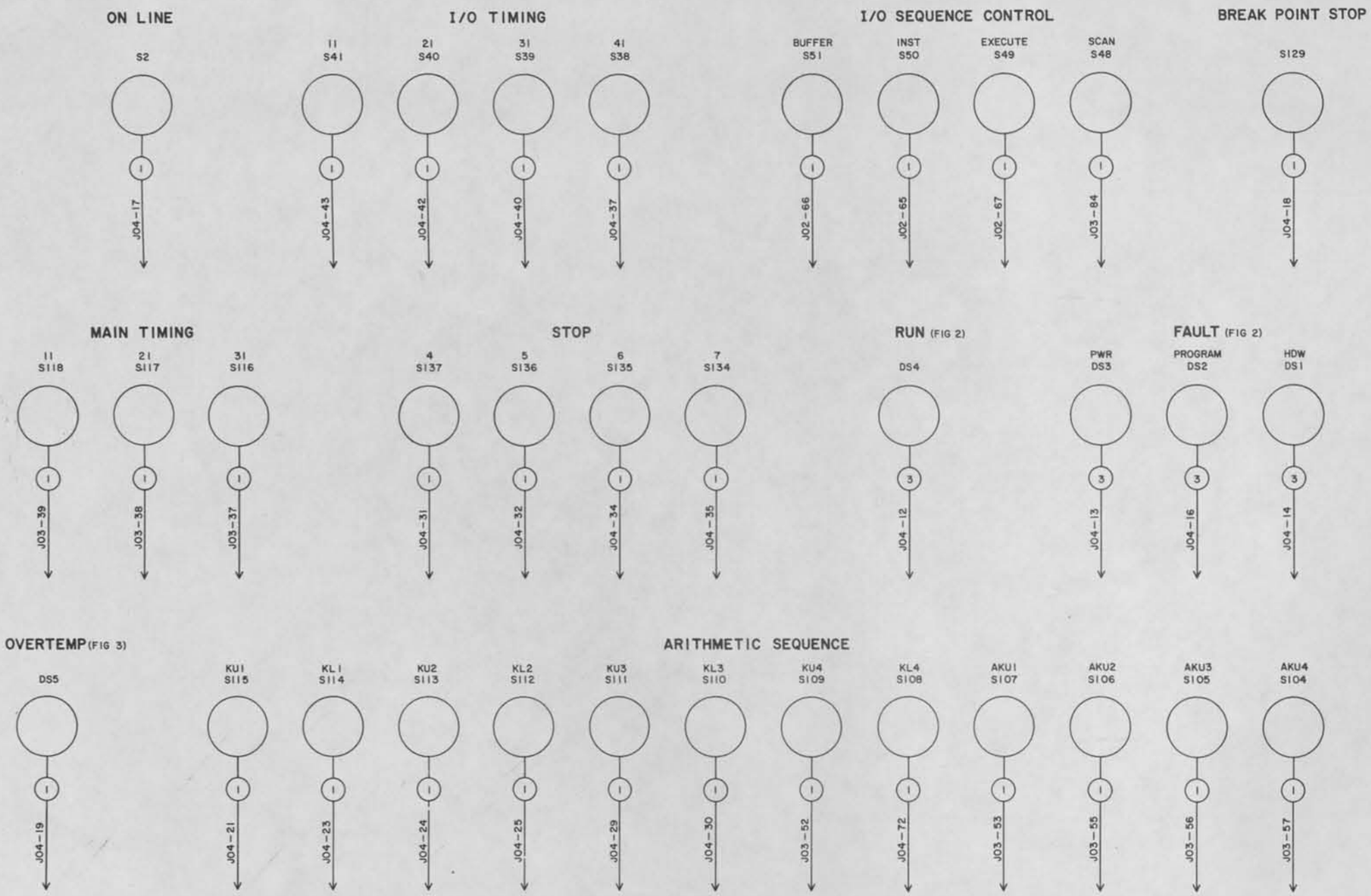

FIG 3
7902802

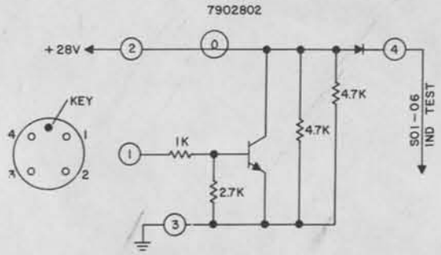

FIG 2
7901971

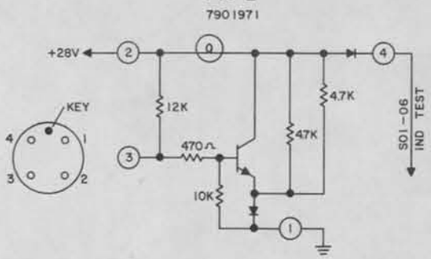

FIG 1
7902334 (ALL MODULES EXCEPT AS NOTED)

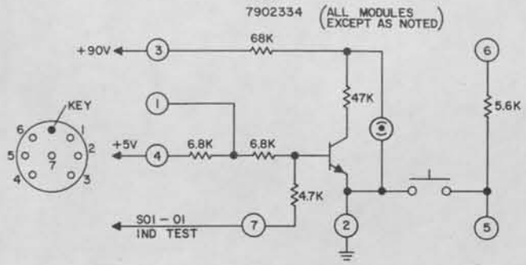

SIZE	CODE IDENT NO.	DWG NO.
D	90536	7073481
SCALE —	CLASS A	SHEET 2

DO NOT SCALE THIS PRINT

A-2100

7073481

REVISIONS						
ZONE	LTR	EIR	DESCRIPTION	CHK	DATE	APPROVED
	B	D02965	SEE EIR		10-26-70	

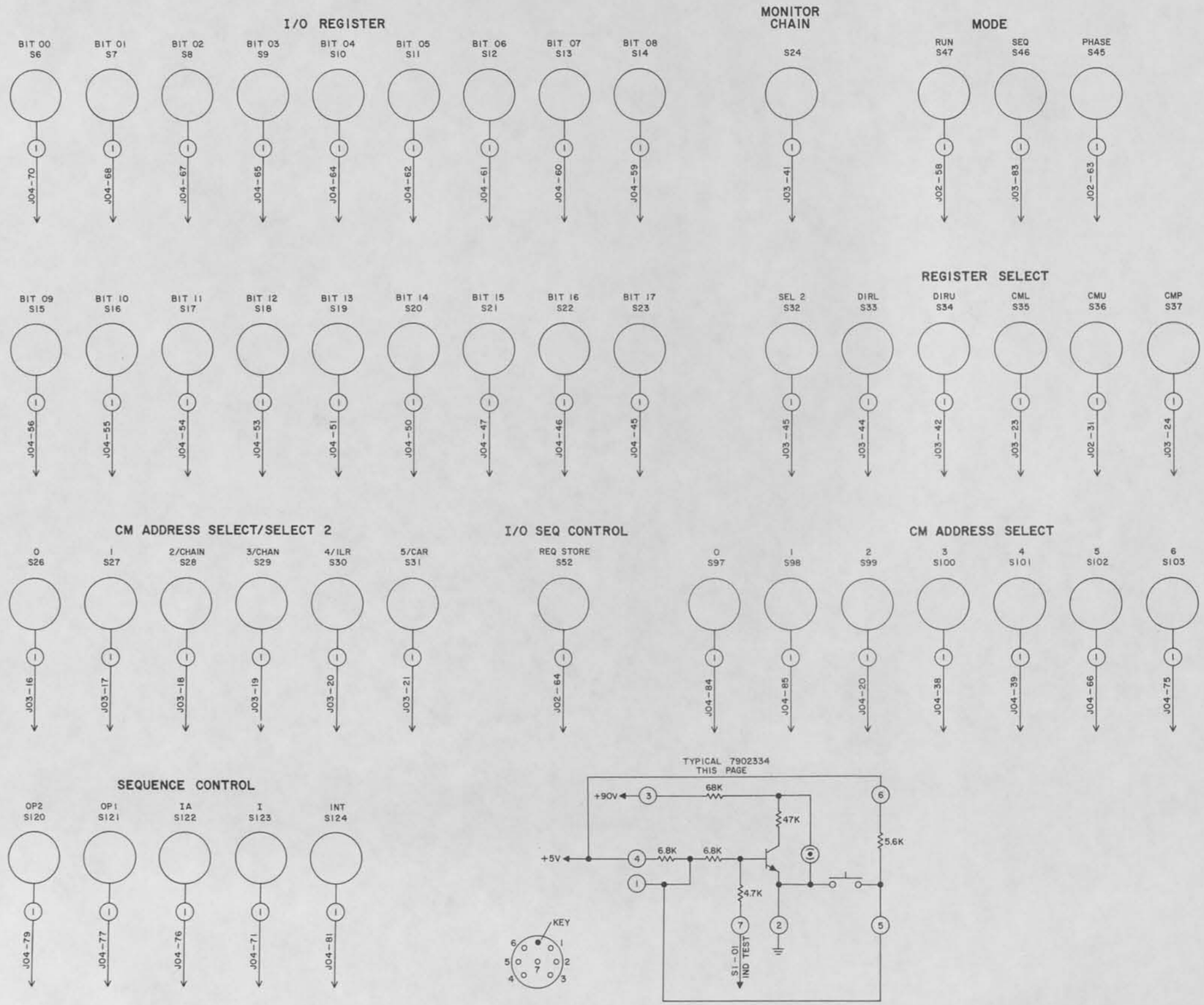

SIZE	CODE IDENT	DWG NO.
D	90536	7073481
SCALE —	CLASS A	SHEET 3

DWG. NO. 7073481

UD1-2534C

REVISIONS						
ZONE	LTR	EIR	DESCRIPTION	CHK	DATE	APPROVED
	B	D02965	SEE EIR		110267	

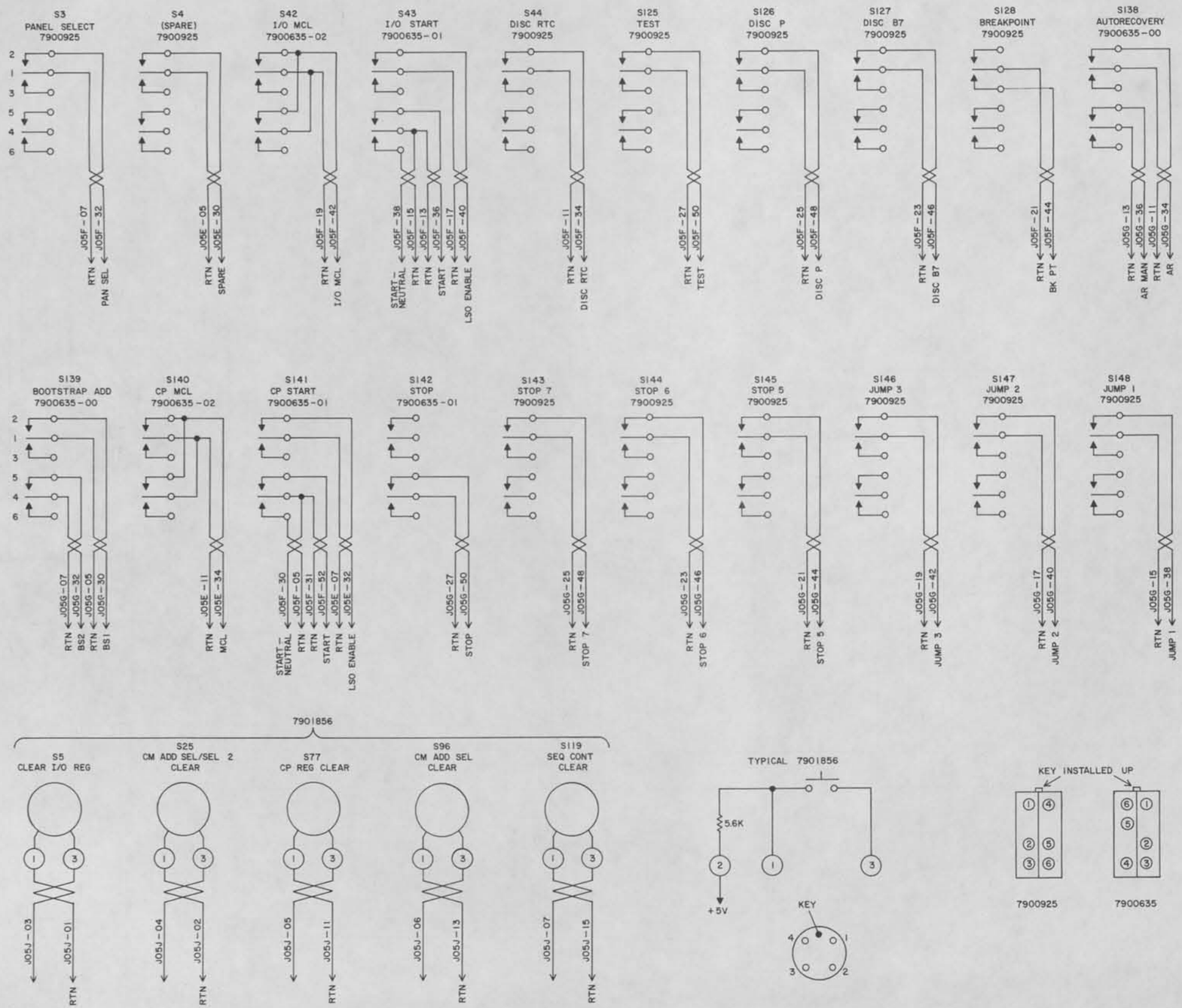

SIZE	CODE IDENT	DWG NO.
D	90536	7073481
SCALE —	CLASS A	SHEET 4

DWG. NO. 7073481

UD1-2534C

REVISIONS						
ZONE	LTR	EIR	DESCRIPTION	CHK	DATE	APPROVED
	A	D01119	SEE EIR		5-21-70	
	B	D02965	SEE EIR		10-26-70	

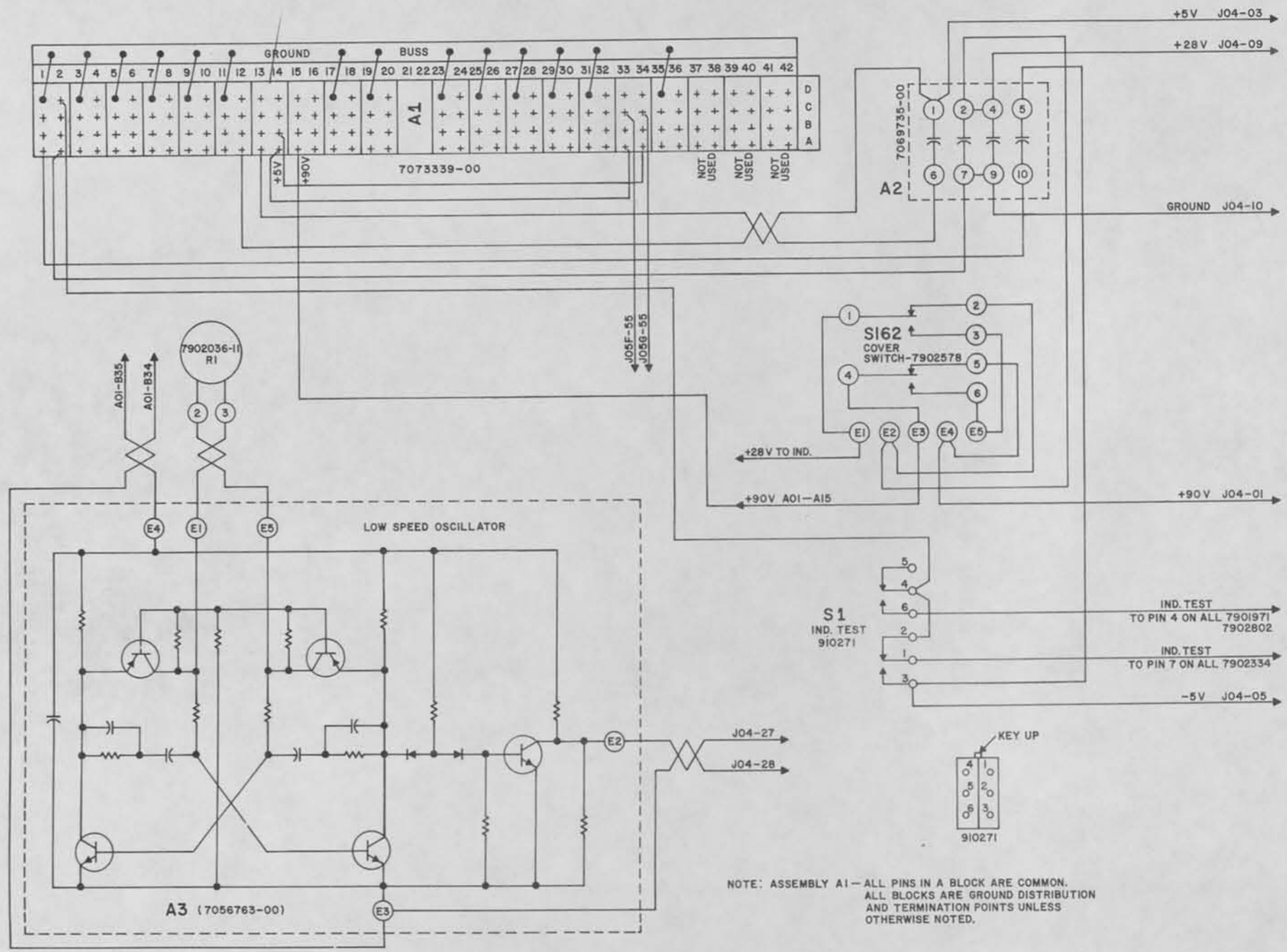

NOTE: ASSEMBLY A1 — ALL PINS IN A BLOCK ARE COMMON. ALL BLOCKS ARE GROUND DISTRIBUTION AND TERMINATION POINTS UNLESS OTHERWISE NOTED.

DWG. NO. 7073481

SIZE	CODE IDENT	DWG NO.
D	90536	7073481
SCALE —	CLASS A	SHEET 5

UD1-2534C

REVISIONS						
ZONE	LTR	EIR	DESCRIPTION	CHK	DATE	APPROVED
	A	19080	UPDATE TO CLASS A			

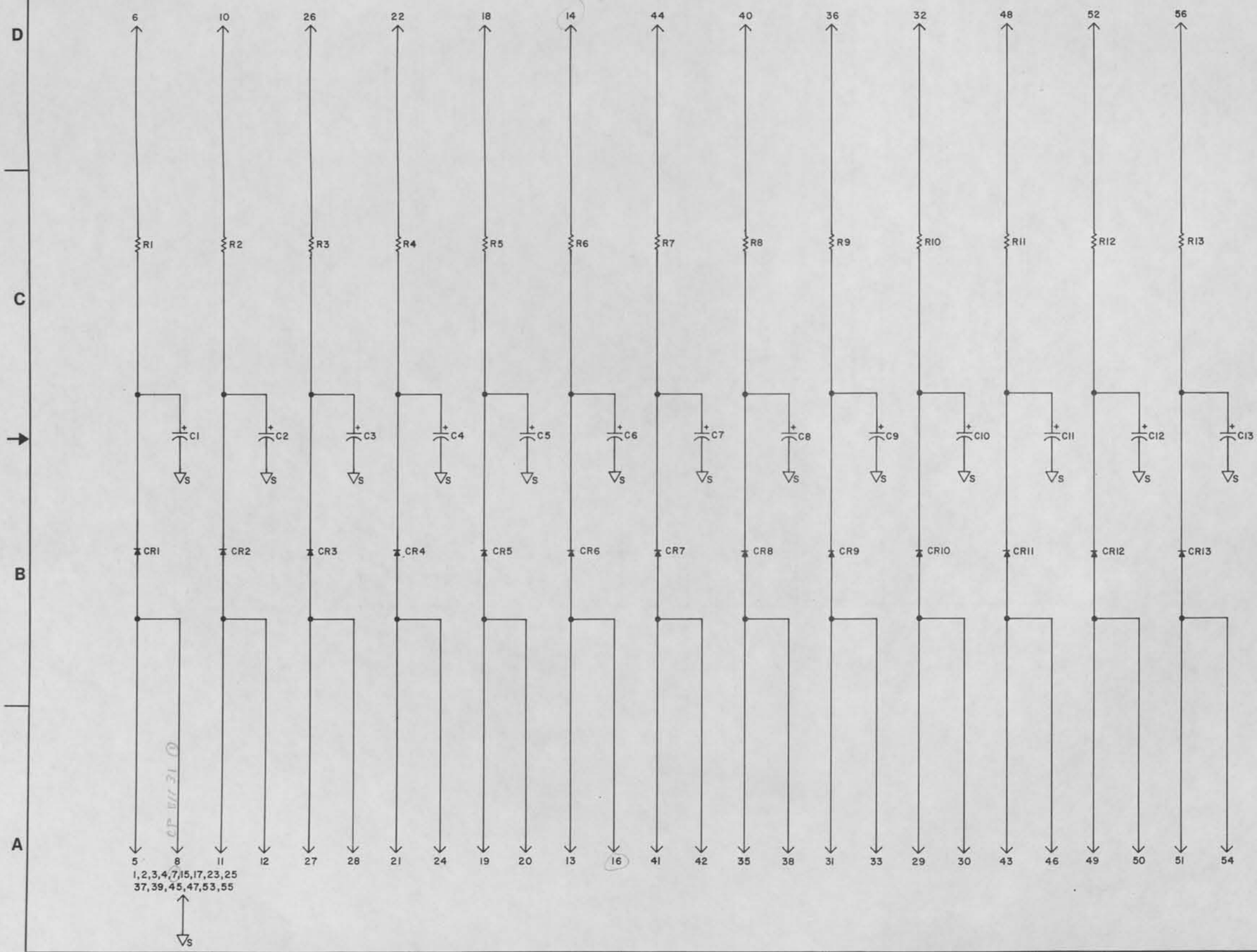

DWG. NO. 7112130

SIZE	CODE IDENT	DWG NO.
D	90536	7112130
SCALE —	CLASS A	SHEET 2

UD1-2534C

REVISIONS						
ZONE	LTR	EIR	DESCRIPTION	CHK	DATE	APPROVED
	A	17091	ORIGINAL RELEASE A	RJ	9/15/67	CJO

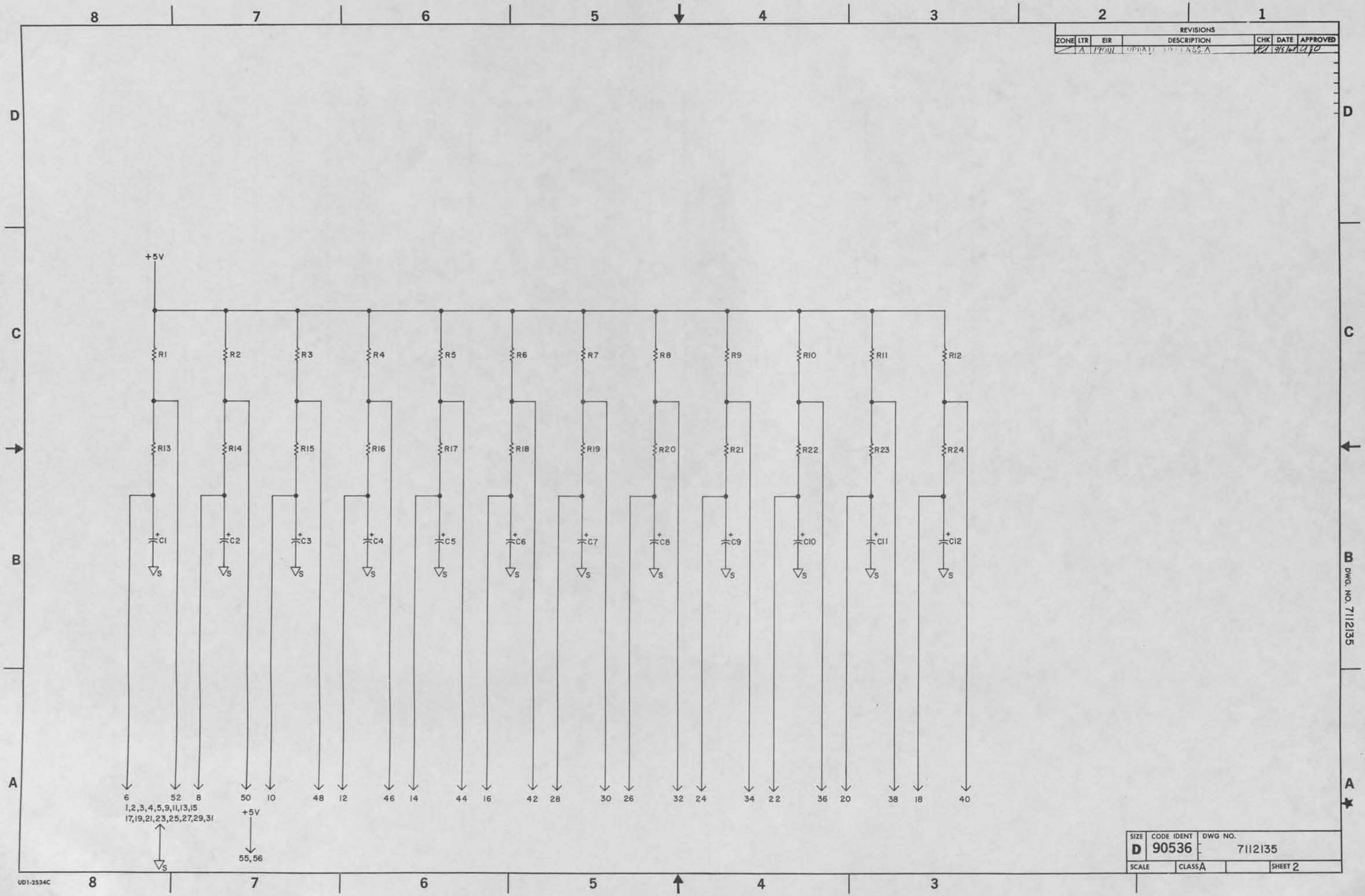

SIZE	CODE IDENT	DWG NO.
D	90536	7112135
SCALE	CLASS A	SHEET 2

UD1-2534C

REVISIONS						
ZONE	LTR	EIR	DESCRIPTION	CHK	DATE	APPROVED
	A	[illegible]	[illegible]	[illegible]	[illegible]	[illegible]

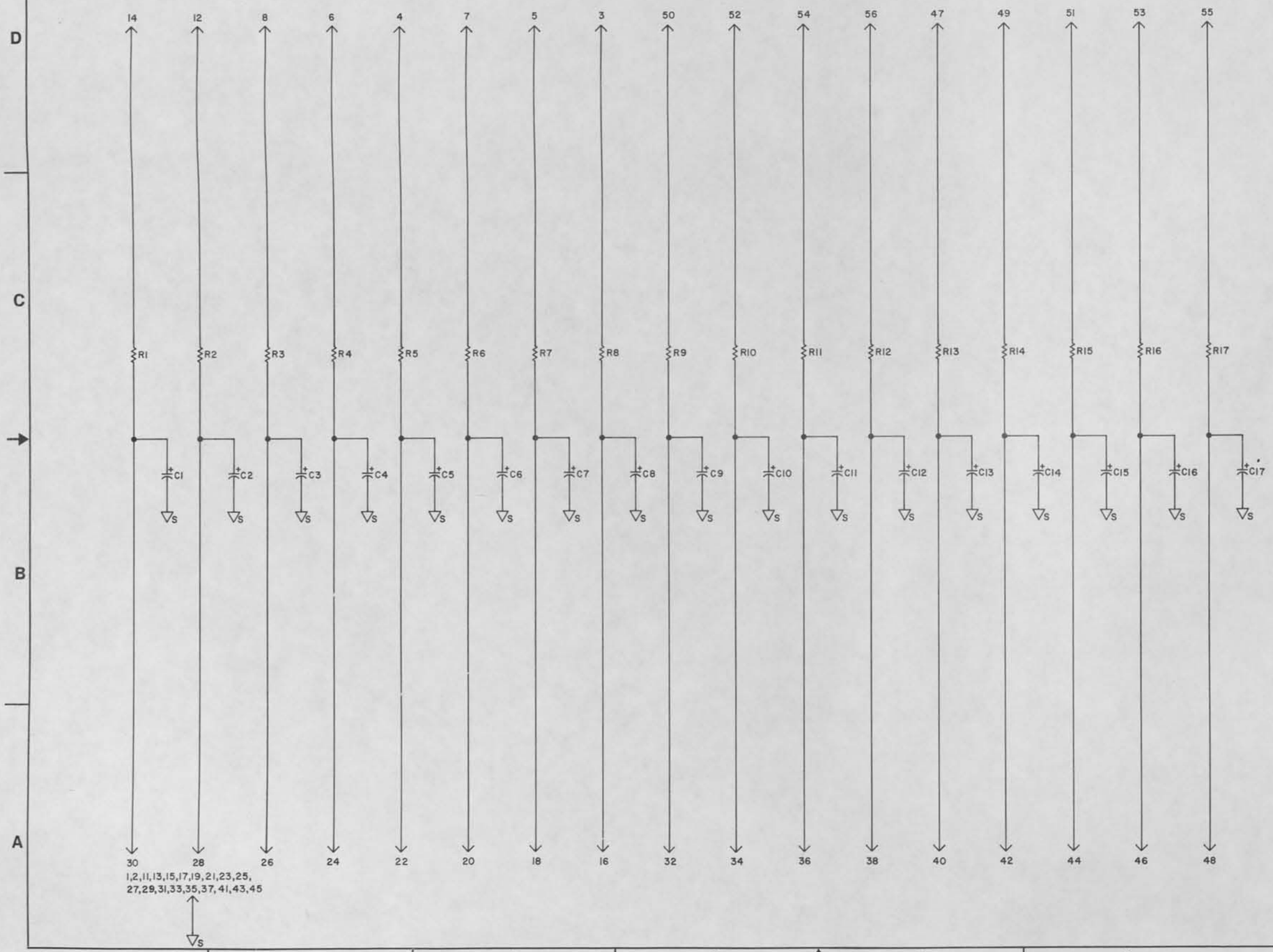

DWG. NO. 7112140

SIZE	CODE IDENT	DWG NO.
D	90536	7112140
SCALE	CLASS A	SHEET 2

UD1-2534C

OPERATOR'S PANEL

LIST OF DRAWINGS

OPERATOR'S PANEL

Drawing (Sheet)	Title
7216356 (1)	7073260 Cabinet (A8), Electrical Schematic
7216356 (2)	7073260 Cabinet (A8), Electrical Schematic
7216356 (3)	7073260 Cabinet (A8), Electrical Schematic
7216356 (4)	7073260 Cabinet (A8), Electrical Schematic

PART NUMBER	VARIABLE
7216356-00	DETAIL A
7216356-01	DETAIL B
7216356-02	DETAIL C
7216356-03	DETAIL D

NOTE:
1. ALL CABINET CONFIGURATIONS DO NOT CONTAIN ALL THE SWITCHES AND INDICATORS SHOWN HEREIN.

REVISIONS

ZONE	LTR	EIR	DESCRIPTION	CHK	DATE	APPROVED
	A	D02939	SEE EIR		11-12-70	
	B	D04843	SEE EIR		1-6-71	
	C	D06647	SEE EIR		5-5-72	
	D	D06588	SEE EIR		12-12-72	
	E	D09000	SEE EIR		7-9-73	
	F	D09656	SEE EIR		7-19-73	

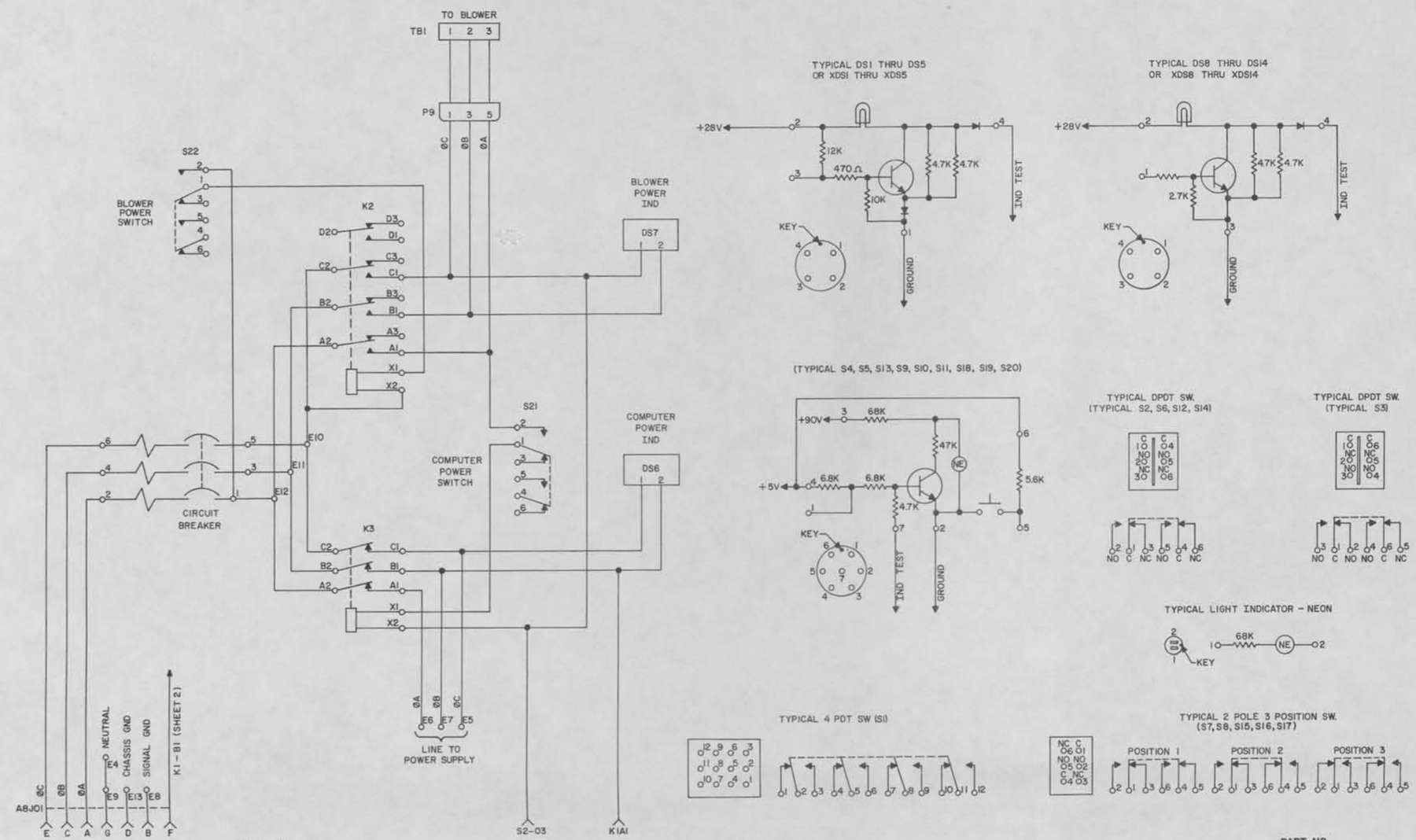

DETAIL A
115V WITHOUT FILTERS
FOR 7073260-00 THRU -03, -05 THRU -08

CHANGE 2

F	F	F	F	REV	SHEET INDEX
4	3	2	1	SHEET	

NEXT ASSY | USED ON
APPLICATION

PART NO.

UNLESS OTHERWISE SPECIFIED
DIMENSIONS IN INCHES TOL ON
2 PLACE DECIMALS ± | 3 PLACE DECIMALS ± | ANGLES ±
HOLE DIA TOL
0 THRU .250 +.003 −.002 | .251 THRU .500 +.005 −.003 | .501 AND LARGER +.010 −.005
THREADS: EXT CL 2A, INT CL 2B

CONTRACT NO.
LAYOUT
DRAWN J. DELPERDANG 7-13-70
CHECKED KAR 8-3-70
ENGR 8-5-70
ENGR
APPROVED E. Vorvilahti 8-5-70

FOR MATL REQUIREMENTS SEE PL

UNIVAC | FEDERAL SYSTEMS DIVISION
UNIVAC PARK, P.O. BOX 3525, ST. PAUL, MINN. 55101

TITLE
ELECTRICAL SCHEMATIC
7073260 CABINET
(A8)

SIZE	CODE IDENT	DWG NO.
D	90536	7216356

SCALE | FORM 2 | SHEET | OF 4

SPERRY RAND

DWG. NO. 7216356

UD1-2534

REVISIONS						
ZONE	LTR	EIR	DESCRIPTION	CHK	DATE	APPROVED
	B	D04843	SEE EIR		10-27-71	
	C	D06647	SEE EIR		5-5-72	
	D	D06588	SEE EIR		12-12-72	
	F	D09656	SEE EIR		7-19-73	

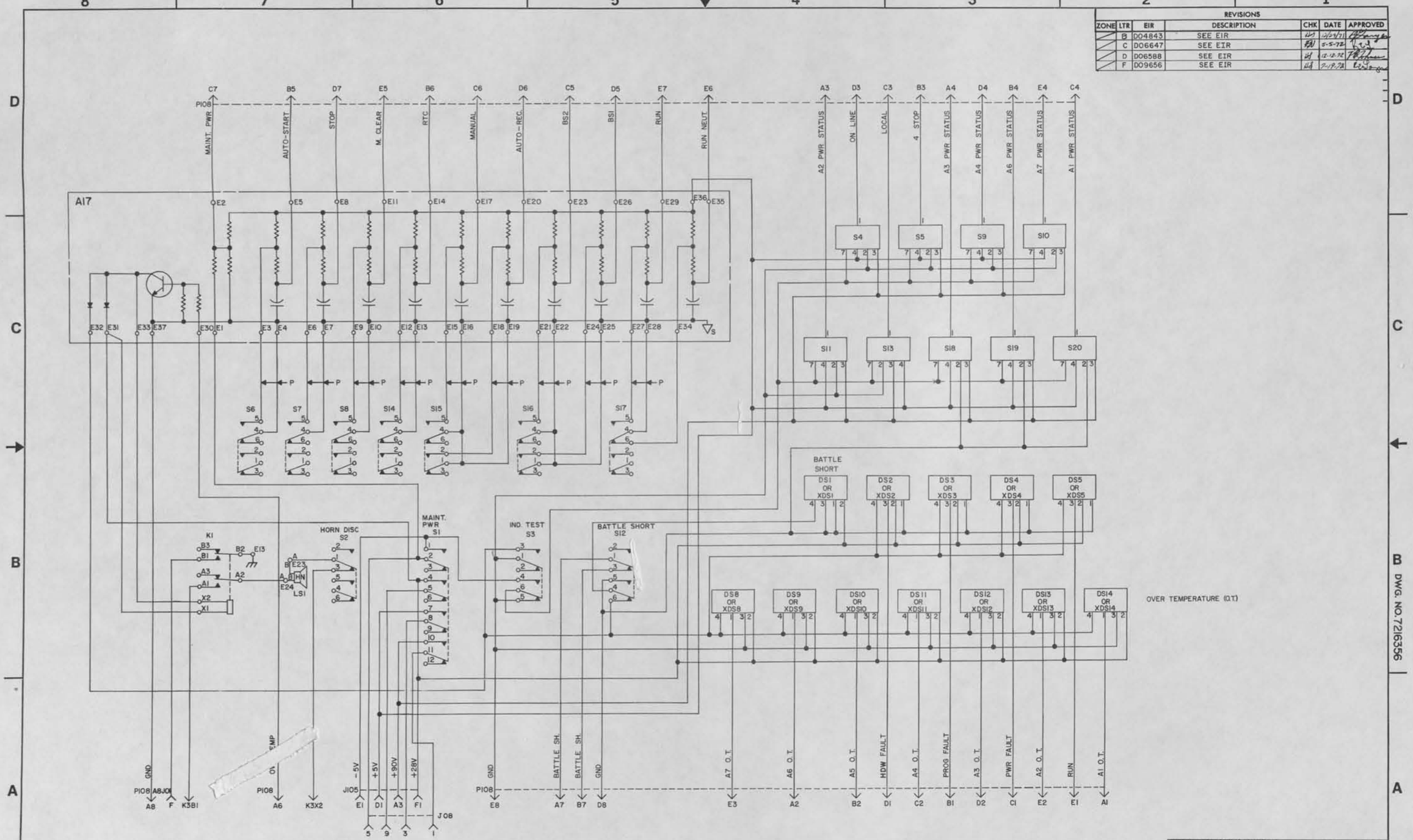

CHANGE 2

DWG. NO. 7216356

SIZE	CODE IDENT	DWG NO.
D	90536	7216356
SCALE	FORM 2	SHEET 2

UD 1-2534C

REVISIONS						
ZONE	LTR	EIR	DESCRIPTION	CHK	DATE	APPROVED
	B	D04843	THIS SHEET ADDED.	HS	2-12-71	[illegible]
	D	D06588	SEE EIR	HS	12-12-72	[illegible]
	E	D09000	SEE EIR	HS	9-9-73	[illegible]
	F	D09656	SEE EIR	HS	7-19-73	[illegible]

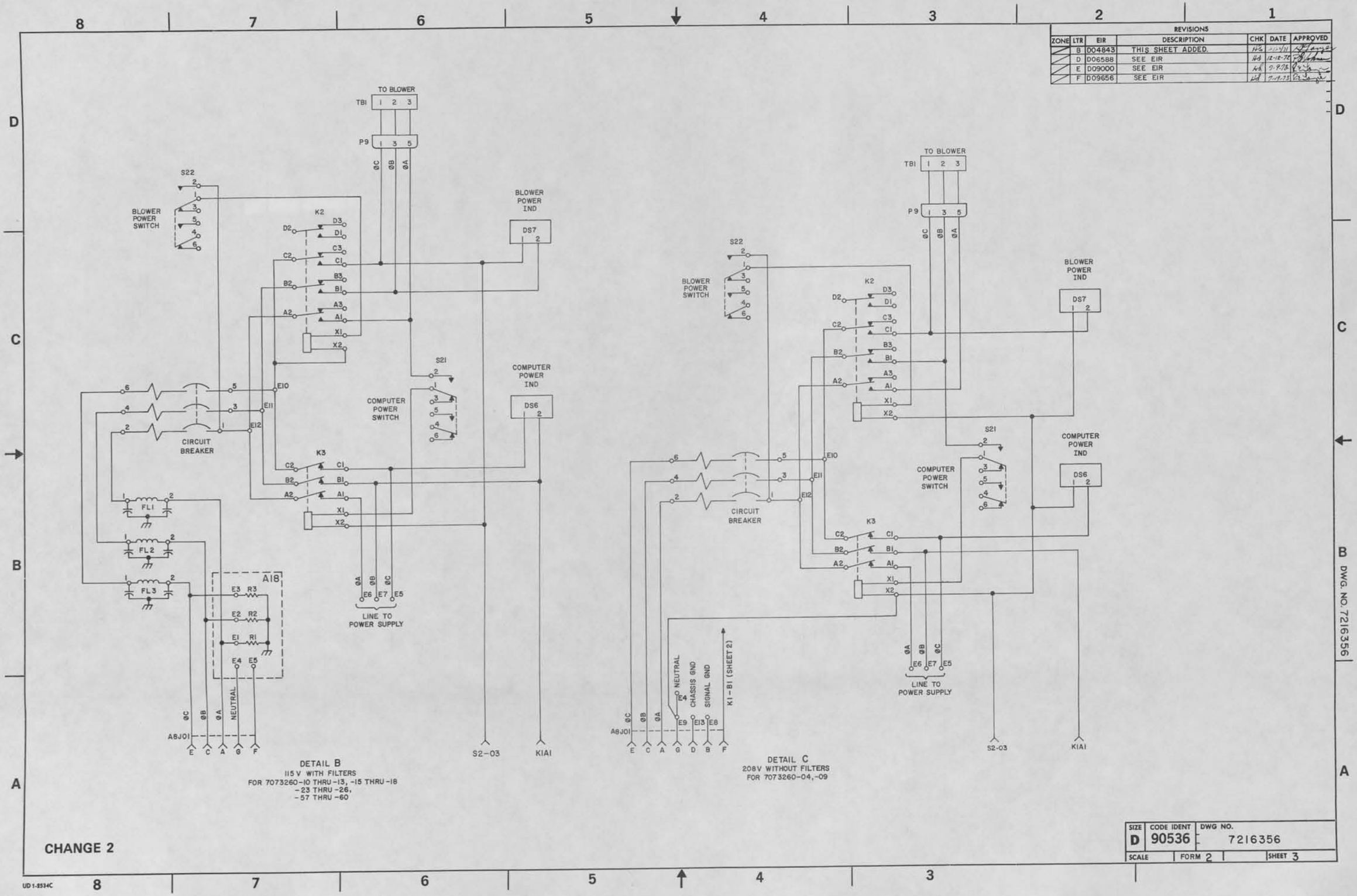

CHANGE 2

SIZE	CODE IDENT	DWG NO.
D	90536	7216356
SCALE	FORM 2	SHEET 3

UD1-8534C

REVISIONS						
ZONE	LTR	EIR	DESCRIPTION	CHK	DATE	APPROVED
	B	D04843	THIS SHEET ADDED.			
	D	D06588	SEE EIR		12-12-72	
	E	D09000	SEE EIR		7-9-73	
	F	D09656	SEE EIR		9-19-73	

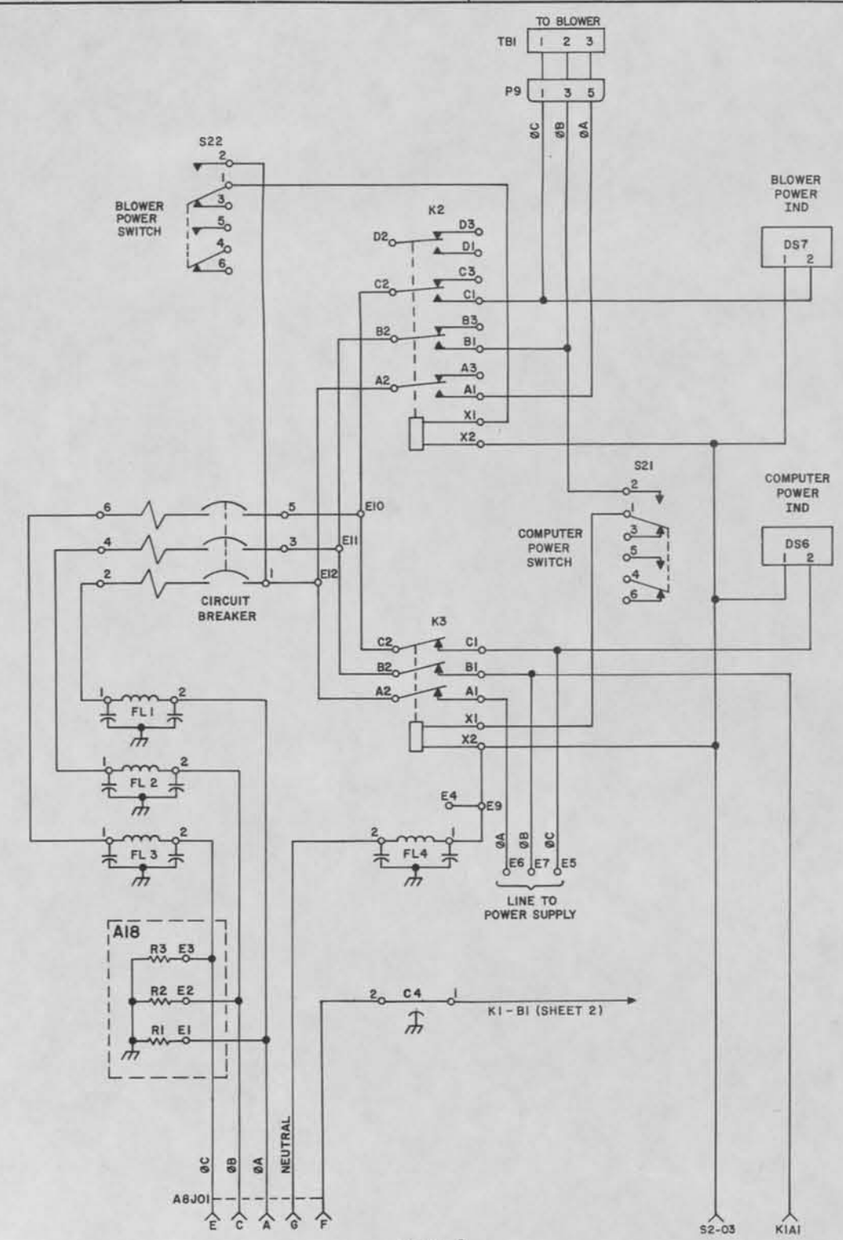

DETAIL D
208V WITH FILTERS
FOR 7073260-14, -19 THRU-22, -27 THRU -30, -61 THRU-64

CHANGE 2

SIZE	CODE IDENT	DWG NO.
D	90536	7216356
SCALE	FORM 2	SHEET 4

DWG. NO. 7216356

REMOTE CONSOLE

LIST OF DRAWINGS

REMOTE CONSOLE

Drawing (Sheet)	Title
7216458 (1)	Remote Console

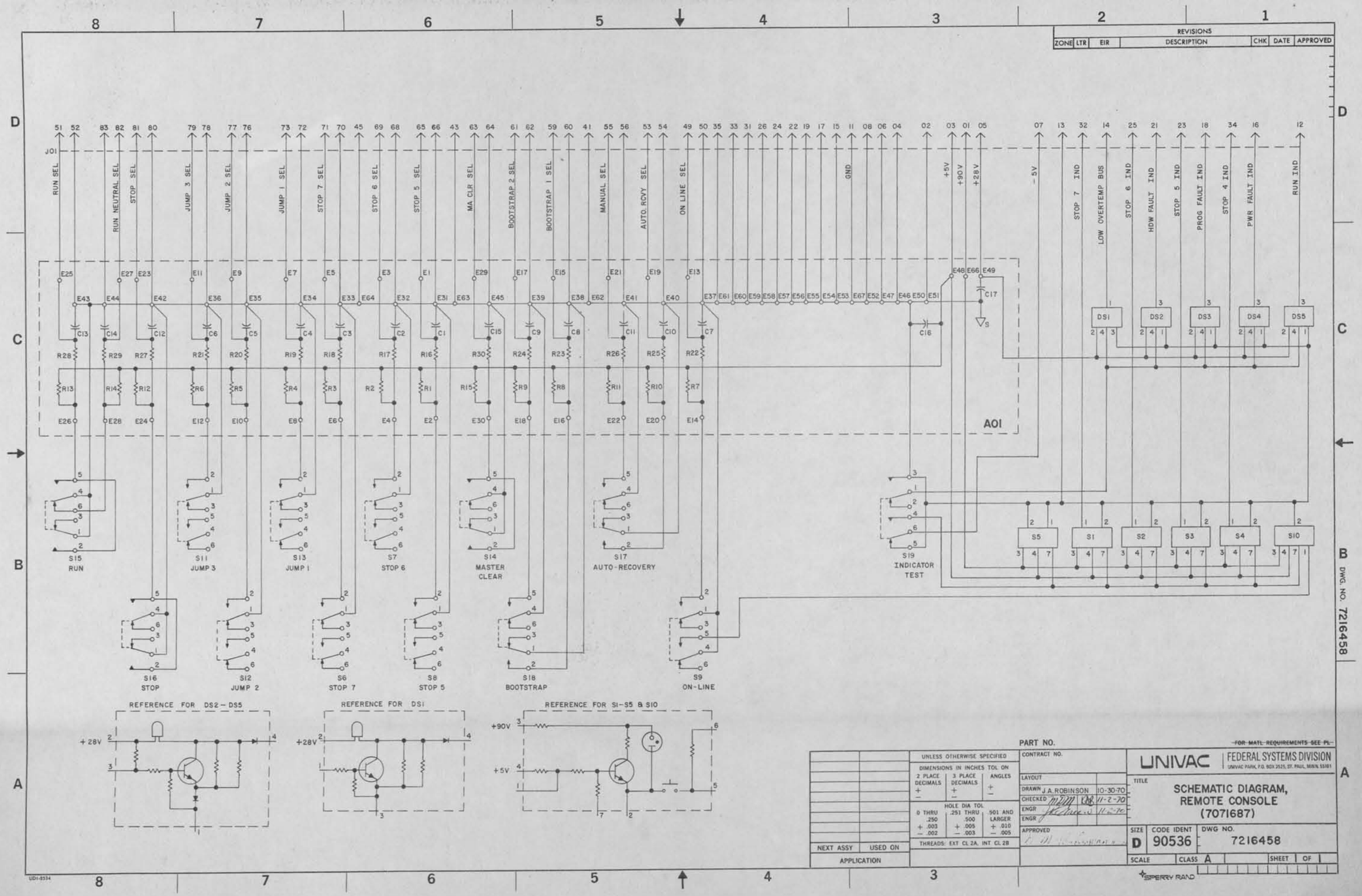
REVISIONS
ZONE LTR EIR DESCRIPTION CHK DATE APPROVED
J01
RUN SEL
RUN NEUTRAL SEL
STOP SEL
JUMP 3 SEL
JUMP 2 SEL
JUMP 1 SEL
STOP 7 SEL
STOP 6 SEL
STOP 5 SEL
MA CLR SEL
BOOTSTRAP 2 SEL
BOOTSTRAP 1 SEL
MANUAL SEL
AUTO RCVY SEL
ON LINE SEL
GND
+5V
+90V
+28V
-5V
STOP 7 IND
LOW OVERTEMP BUS
STOP 6 IND
HDW FAULT IND
STOP 5 IND
PROG FAULT IND
STOP 4 IND
PWR FAULT IND
RUN IND
A01
DS1
DS2
DS3
DS4
DS5
S15 RUN
S11 JUMP 3
S13 JUMP 1
S7 STOP 6
S14 MASTER CLEAR
S17 AUTO-RECOVERY
S19 INDICATOR TEST
S16 STOP
S12 JUMP 2
S6 STOP 7
S8 STOP 5
S18 BOOTSTRAP
S9 ON-LINE
REFERENCE FOR DS2 – DS5
REFERENCE FOR DS1
REFERENCE FOR S1-S5 & S10
+28V
+90V
+5V
PART NO.
FOR MATL REQUIREMENTS SEE PL
UNLESS OTHERWISE SPECIFIED
DIMENSIONS IN INCHES TOL ON
2 PLACE DECIMALS ± 3 PLACE DECIMALS ± ANGLES ±
HOLE DIA TOL
0 THRU .250 + .003 − .002
.251 THRU .500 + .005 − .003
.501 AND LARGER + .010 − .005
THREADS: EXT CL 2A, INT CL 2B
NEXT ASSY USED ON
APPLICATION
CONTRACT NO.
LAYOUT
DRAWN J.A.ROBINSON 10-30-70
CHECKED 11-2-70
ENGR 11-2-70
ENGR
APPROVED
UNIVAC FEDERAL SYSTEMS DIVISION
UNIVAC PARK, P.O. BOX 2525, ST. PAUL, MINN. 55101
TITLE
SCHEMATIC DIAGRAM, REMOTE CONSOLE (7071687)
SIZE D
CODE IDENT 90536
DWG NO. 7216458
SCALE
CLASS A
SHEET OF
SPERRY RAND
DWG. NO. 7216458
UD1-8534