Acc. #3707

DECISION TABLES TRAINING MANUAL

TRAINING
SECTION
INDUSTRIAL RELATIONS

March 1962

© Copyright 1962 by The Boeing Company
All Rights Reserved

AERO-SPACE DIVISION
THE BOEING COMPANY

PREFACE

The Decision Table Training Manual contains copies of training aids used in the Decision Table training course given by the Boeing Aero-Space Division, Industrial Relations Training Section. Reproductions of flip charts used by the instructor are included along with copies of class exercises and work sheets.

The material in the course has been prepared by Otis Simpson of the Aero-Space Division, Administration Department.

The concept of Decision Tables originated with the General Electric Company. Modifications developed by IBM are used in this manual.

The course also includes some extensions of the original technique which enable the user to systematically synthesize a set of complex conditional statements and to expose and correct redundancies or voids in logic.

Graphic methods for the expression of Boolean statements are demonstrated. For those who require a more detailed knowledge of the subject, it is planned to supplement this course with a treatment of the algebraic approach to decision logic.

TABLE of CONTENTS

I FIRST SESSION

Common Decision Tables I-1
History I-3
Reading a Decision Table and Decision Matrix I-5
Exercise Demonstrating Decision Table Need I-9
Decisions I-12
Rules I-13
Conditional Statements I-14
And I-18
Or I-19
Parameters I-20
Exercise on Parameters I-24
Limited Entry Decision Tables I-25
Extended Entry Decision Tables I-26
Determining the Number of Rules I-27

II WORK PROBLEMS

Standard Metrology Lab II-1
BI-MM Remote Locations II-6
Graduate Study Program II-9

III SECOND SESSION

Decision Table Arrangements III-1
Decision Matrix Arrangement III-5
Exercises on Arrangement III-8
Matrix Method of Table Reduction III-10
Exercises on Reduction III-15
Else Rule III-16
Except Statement III-17
Exercises on Except Statement III-21
Complex Table Reduction III-27
Flow Diagram Equivalents III-29
Logic Tree Equivalent III-31
Comparative Operators III-32
Different Decision Table and Matrix Forms III-36

TABLES

MAIL PICKUP			
	MON - FRI	SAT	SUN - HOL
AM	8:30 10:15 11:45	10:15	
PM	2:00 3:45 6:00 9:30	2:00 8:00	2:00 8:00

TABLE

BEND RADII - ALUMINUM						
GAGE	6061-0	2024-0 6061-T4	7075-0	2024-T3 2024-T4	7075-T6 2024-T36	2024-T86
.016	.03	.03	.03	.06	.09	.25
.032	.03	.06	.06	.12	.16	.44
.071	.09	.12	.12	.28	.38	.75
.125	.12	.25	.28	.56	.88	

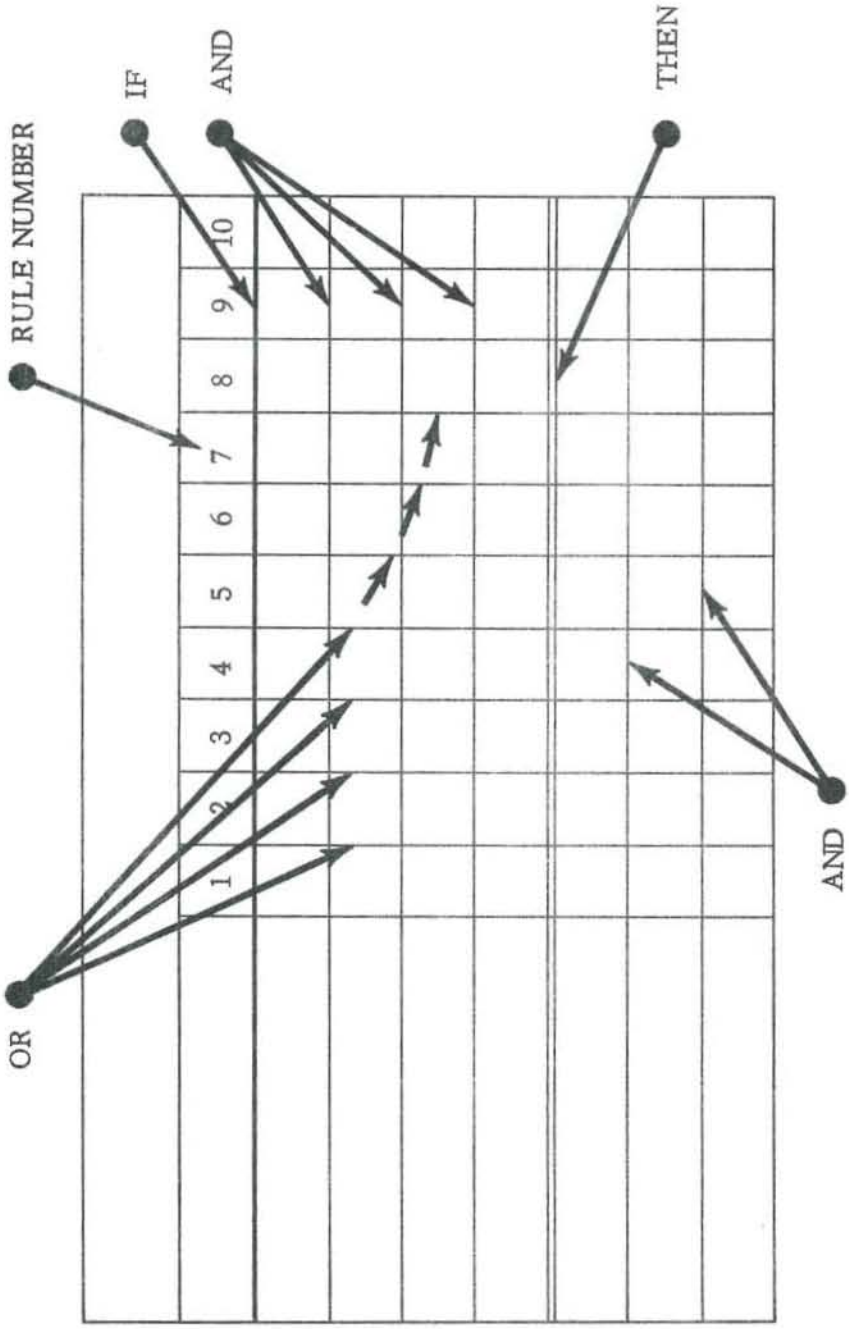
RULE NUMBER
IF
AND
THEN
OR
AND
1
2
3
4
5
6
7
8
9
10

TOOL ORDER REVISIONS

Rule Number

Or

If

And

Then

		1	2	3	4	5	6	7	8
TYPE OF ORDER	Tool Order	Y	Y	Y				-	-
	TOOL DESIGN REQ				Y	Y	Y	-	-
TOOL ORDERED IN ERROR		N	N	N	N	N	N	N	Y
TOOL REQUIREMENT DELETED		N	N	N	N	N	N	Y	-
TOOL NUMBER CHANGE		N	Y	-	-	-	-	-	-
<2 EXISTING SUPPLEMENTS		-	-	-	-	Y	N	-	-
SUFFICIENT SPACE ON ORDER		Y	-	N	Y	N	N	-	-
CHANGE		X			X				
SUPERSEDE			X	X		X			
SUPPLEMENT							X		
CANCEL								X	X

AERO-SPACE DIVISION
THE BOEING COMPANY

TRAINING SECTION
INDUSTRIAL RELATIONS

FOR TRAINING PURPOSES ONLY

TRAINING SECTION
INDUSTRIAL RELATIONS

RESPONSIBILITY

RECEIVE AND ROUTE INCOMING PROPERTY

A. FINANCE WILL RECEIVE AND ROUTE ALL INCOMING SHIPMENTS AT REMOTE LOCATIONS EXCEPT AS NOTED.

NOTE: AT PLANT 77 ONLY PURCHASED PARTS DELIVERED ON A PURCHASE ORDER OR ON A DD 1149 WILL BE RECEIVED BY FINANCE.

B. PRODUCTION CONTROL WILL RECEIVE AND ROUTE ALL BOEING NUMBERED DETAILS, SUB-ASSEMBLIES AND EQUIPMENT, AND ALL GOVERNMENT FURNISHED ITEMS DELIVERED ON DD FORM 250 AT PLANT 77 ONLY.

AERO-SPACE DIVISION
THE BOEING COMPANY

RESPONSIBILITY

RECEIVE AND ROUTE INCOMING PROPERTY

	1	2	3	4	5	6	7	8	9	10	11	12	13	14	15	16	17	18
VANDENBERG	Y			Y			Y			Y			Y			Y		
BASES		Y			Y			Y			Y			Y			Y	
PLANT 77			Y			Y			Y			Y			Y			Y
PURCHASE ORDER							N	N	N									
DD 1149				Y	Y	Y	N	N	N									
DD 250													Y	Y	Y	N	N	N
PURCHASED PART	Y	Y	Y	Y	Y	Y	Y	Y	Y									
BOEING NO'D ITEM										Y	Y	Y						
GOV't FURNISHED													Y	Y	Y	Y	Y	Y
RESPONSIBILITY																		

ENTER P (PRODUCTION) OR F (FINANCE) IN EACH BLOCK IN RESPONSIBILITY ROW

DECISIONS

1. LOGICAL

   WE WILL LIMIT OUR DISCUSSION TO DECISION MAKING THROUGH RULES WHICH CAN BE PRECISELY STATED.

2. ARBITRARY

   A DECISION MAY RESULT EVEN THOUGH NO RULE CAN BE STATED.

   SUCH DECISIONS ARE BASED ON JUDGMENT, EXPERIENCE, PERSONAL DESIRES, INTANGIBLE VALUES.

RULES

- A RULE IS ORIGINATED AND APPROVED BY A HIGHER (LEGISLATIVE) AUTHORITY.
- ITS PURPOSE IS TO STANDARDIZE THE DECISION MAKING PROCESS.
- IT IS USED BY LOWER (JUDICIAL) AUTHORITY BY TESTING EACH CASE AGAINST THE PRESCRIBED CONDITIONS IN THE RULE.

FOR TRAINING PURPOSES ONLY

TRAINING SECTION
INDUSTRIAL RELATIONS

CONDITIONAL RULES

A CONDITIONAL RULE EXPRESSES THE RELATIONSHIP

BETWEEN CONDITIONS AND ACTIONS

AND IS OF THE FORM:

IF A AND B AND C, THEN X AND Y AND Z

WHERE:

A, B AND C ARE CONDITIONS AND

X, Y AND Z ARE ACTIONS

AERO-SPACE DIVISION
THE BOEING COMPANY

CONDITIONAL STATEMENTS MAY BE FOUND IN:

LAWS	INSTRUCTIONS
POLICIES	PLANS
STANDARDS	PROGRAMS
PRACTICES	METHODS
PROCEDURES	TECHNIQUES
DIRECTIVES	REGULATIONS
GROUND RULES	DEFINITIONS
	CODES

CONDITIONS

A STATEMENT WHICH ESTABLISHES THE PREREQUISITES FOR AN ACTION IS DEFINED AS A CONDITION.

A FORMAL CONDITIONAL STATEMENT IS PRECEDED BY "IF", BUT ANY OF THE FOLLOWING SYNONYMS MIGHT BE USED IN A NARRATIVE CONDITIONAL STATEMENT.

WHEN	SUBJECT TO	IN
SUPPOSING	ONLY	BUT
IN CASE	WHERE	WHETHER
UNLESS	AT	HOWEVER
EXCEPT	EVEN THOUGH	BASED ON
PROVIDED	BECAUSE	WHEREVER
ON		

AERO-SPACE DIVISION
THE BOEING COMPANY

TRAINING SECTION
INDUSTRIAL RELATIONS

ACTIONS

IN A FORMAL CONDITIONAL RULE THE WORD "THEN" PRECEDES THE ACTION WE WISH TO FOLLOW WHEN THE PROPER SET OF CONDITIONS ARE SATISFIED.

A NARRATIVE CONDITIONAL RULE MAY IMPLY THE WORD "THEN" OR MAY EMPLOY ONE OF THESE SYNONYMS.

THUS

ACCORDINGLY

THEREFORE

CONSEQUENTLY

THEREBY

AERO-SPACE DIVISION
THE BOEING COMPANY

TRAINING SECTION
INDUSTRIAL RELATIONS

AND

THE WORD AND DENOTES ADDITION.

WHEN USED IN LOGIC, THE WORD AND IS USED TO ADD CONDITIONS.

EACH CONDITION ADDED TO A RULE REDUCES THE SIZE OF THE CLASS BEING DEFINED BY THE RULE.

THEREFORE, AND SUBTRACTS FROM TWO CLASSES ALL ITEMS NOT COMMON TO BOTH.

OR

THE WORD OR DENOTES "EITHER", AND IMPLIES THAT MORE THAN ONE SET OF CONDITIONS LEADS TO THE SAME ACTION.

THEREFORE, OR ADDS CLASSES. THE RESULTING CLASS INCLUDES ALL ITEMS IN EACH OF THE ORIGINAL CLASSES. IT ALSO INCLUDES ALL ITEMS COMMON TO TWO OR MORE OF THE ORIGINAL CLASSES.

FOR TRAINING PURPOSES ONLY

TRAINING SECTION
INDUSTRIAL RELATIONS

PARAMETER

A PARAMETER IS A CLASS TO WHICH A SET OF ARBITRARY VALUES MAY BE ASSIGNED

EXAMPLES:

	PARAMETER	VALUES
A.	PROGRAM	BOMARC MINUTEMAN DYNA SOAR
B.	LOCATION	WICHITA SEATTLE PHILADELPHIA
C.	$\leq$ 50 HOURS	YES NO

AERO-SPACE DIVISION
THE BOEING COMPANY

THE VALUES WITHIN THE PARAMETER MUST BE SELECTED SO THAT ANY PARTICULAR CASE CAN ASSUME ONE VALUE ONLY.

EXAMPLE:

	PARAMETER	VALUE
INCORRECT -	AGE	≤ 25
		≤ 40
		> 40
CORRECT	AGE	≤ 25
		$> 25 \leq 40$
		> 40

AERO-SPACE DIVISION
THE BOEING COMPANY

TRAINING SECTION
INDUSTRIAL RELATIONS

TO DETERMINE THE QUANTITY OF RULES IN A TABLE:

1. IDENTIFY EACH PARAMETER

   EACH PARAMETER SHOULD BE SEPARATED BY ONE BLANK ROW FROM OTHER PARAMETERS IN THE SAME TABLE.

TRAINING SECTION
INDUSTRIAL RELATIONS
AERO-SPACE DIVISION
THE BOEING COMPANY

2. DETERMINE THE QUANTITY OF VALUES WITHIN EACH PARAMETER

EXAMPLES:

	PARAMETER	VALUES	QTY
a.	BEHIND SCHEDULE	YES, NO	2
b.	AHEAD SCHEDULE	NO, YES	2
c.	BEHIND SCHEDULE	YES, NO	2
	AHEAD SCHEDULE	NO, YES	

FOR TRAINING PURPOSES ONLY

2. CONTINUED

EXAMPLE:

	PARAMETER	VALUES	QTY
a.	PROGRAM	BOMARC MINUTEMAN DYNASOAR	3

IF ALLOWANCE IS TO BE MADE FOR EXCEPTIONS:

b.	PROGRAM	BOMARC MINUTEMAN DYNASOAR OTHER	4

AERO-SPACE DIVISION
THE BOEING COMPANY

TRAINING SECTION
INDUSTRIAL RELATIONS

FOR TRAINING PURPOSES ONLY

3. THE COLLECTIVE PRODUCT OF THE QUANTITY OF VALUES IN EACH CONDITIONAL PARAMETER IS EQUAL TO THE MAXIMUM QUANTITY OF RULES IN THE TABLE.

EXAMPLE:

PARAMETER	QTY OF VALUES
A	2
B	4
C	3
D	2

MAX. QUANTITY OF RULES = $2 \cdot 4 \cdot 3 \cdot 2 = 48$

TRAINING SECTION
INDUSTRIAL RELATIONS

AERO-SPACE DIVISION
THE BOEING COMPANY

	1	2	3	4
B	Y	Y	N	N
C	Y	N	Y	N

(2) CONDITIONAL PARAMETERS

(2) VALUES EACH

(4) RULES POSSIBLE

AERO-SPACE DIVISION
THE BOEING COMPANY

TRAINING SECTION
INDUSTRIAL RELATIONS

	1	2	3	4	5	6	7	8
A	1	1	1	1	2	2	2	2
B	Y	Y	N	N	Y	Y	N	N
C	Y	N	Y	N	Y	N	Y	N

(3) CONDITIONAL PARAMETERS

(2) VALUES EACH

(8) RULES POSSIBLE

TRAINING SECTION
INDUSTRIAL RELATIONS
AERO-SPACE DIVISION
THE BOEING COMPANY

	1	2	3	4	5	6	7	8	9	10	11	12
A	1	1	1	1	2	2	2	2	3	3	3	3
B	Y	Y	N	N	Y	Y	N	N	Y	Y	N	N
C	Y	N	Y	N	Y	N	Y	N	Y	N	Y	N

- IF A IS ALLOWED TO ASSUME (3) VALUES, 12 (3.2.2) RULES ARE POSSIBLE
- IF (3) CONDITIONS ASSUME (3) VALUES 27 (3.3.3) RULES ARE POSSIBLE
- IF IN ACTUAL PRACTICE, NO CASE CAN OCCUR IN WHICH B AND C ARE BOTH YES, THEN RULES 1, 5, AND 9 ARE ELIMINATED, LEAVING 9 RULES

AERO-SPACE DIVISION
THE BOEING COMPANY

TRAINING SECTION
INDUSTRIAL RELATIONS

DECISION MATRIX ACTIVATION

STANDARDS METROLOGY LABORATORY

			OFFICE			LAB.			SHOP		
			Furn.	Mach.	Equip.	Furn.	Mach.	Equip.	Furn.	Mach.	Equip.
EXISTING	N	N	1	1		1		1			1
		Y									
	Y	N									
		Y									
NEW	N	N									
		Y		3		3		3			3
	Y	N	2	2							
		Y									

ACTIVATION

STANDARDS METROLOGY LABORATORY

	1	2	3	4	5	6	7	8	9	10	11		1	2	3
OFFICE	Y	Y	Y	Y	Y										
LAB						Y	Y	Y	Y						
SHOP										Y	Y				
FURNITURE	Y	Y						Y	Y						
MACHINES			Y	Y	Y										
EQUIPMENT						Y	Y			Y	Y				
EXISTING		Y			Y		Y		Y	Y			Y		
NEW	Y		Y	Y		Y		Y			Y			Y	Y
POOL	Y		Y	N		N		N			N			Y	N
SPECIAL			N	Y											
MOVE FROM PRESENT LOCATION		X			X		X		X	X			X		
REQUEST FROM FACILITIES REP.	X		X											X	
DELIVER FROM POOL	X		X											X	
PROCESS FACILITIES REQUEST				X		X		X			X				X
PROCURE PER FAC. REQ.				X		X		X			X				X

FOR TRAINING PURPOSES ONLY

TRAINING SECTION
INDUSTRIAL RELATIONS

LIMITED ENTRY VERSION

LOCATION																								
PLT 2	Y	Y	Y	Y	Y	Y																		
MPC							Y	Y	Y	Y	Y	Y												
DC													Y	Y	Y	Y	Y	Y						
201																			Y	Y	Y	Y	Y	Y
SHIFT																								
1	Y	Y					Y	Y					Y	Y					Y	Y				
2			Y	Y					Y	Y					Y	Y					Y	Y		
3					Y	Y					Y	Y					Y	Y					Y	Y
SEX																								
M	Y		Y		Y		Y		Y		Y		Y		Y		Y		Y		Y		Y	
F		Y		Y		Y		Y		Y		Y		Y		Y		Y		Y		Y		Y

AERO-SPACE DIVISION
THE BOEING COMPANY

FOR TRAINING PURPOSES ONLY

TRAINING SECTION
INDUSTRIAL RELATIONS

TABLE ARRANGEMENT

PROBLEM: DETERMINE ALL POSSIBLE RULES INVOLVING:

PARAMETER	VALUES
SEX	M F
SHIFT	1 2 3
LOCATION	PLT 2 (P) MPC (M) DC (D) 201 (2)

AERO-SPACE DIVISION
THE BOEING COMPANY

A. DETERMINE ORDER OF SIGNIFICANCE OF PARAMETERS - IN OUR CASE ASSUME:

1. LOCATION
2. SHIFT
3. SEX

B. BEGINNING AT THE LOWEST ORDER, REPEAT EACH VALUE OF SEX (M, F) FOR EACH VALUE OF SHIFT (1, 2, 3)

	1	2	3	4	5	6
SHIFT	1	1	2	2	3	3
SEX	M	F	M	F	M	F

C. REPEAT THE ABOVE FOR EACH VALUE OF LOCATION.

	1	2	3	4	5	6	7	8	9	10	11	12	13	14	15	16	17	18	19	20	21	22	23	24
LOCATION	P	P	P	P	P	P	M	M	M	M	M	M	D	D	D	D	D	D	2	2	2	2	2	2
SHIFT	1	1	2	2	3	3	1	1	2	2	3	3	1	1	2	2	3	3	1	1	2	2	3	3
SEX	M	F	M	F	M	F	M	F	M	F	M	F	M	F	M	F	M	F	M	F	M	F	M	F

AERO-SPACE DIVISION
THE BOEING COMPANY

TRAINING SECTION
INDUSTRIAL RELATIONS

THE TABLE MAY BE EASIER TO UNDERSTAND IF THE PARAMETERS ARE ARRANGED SO THAT THOSE WITH THE SMALLER NUMBER OF VALUES ARE PLACED AT THE TOP

	1	7	13	19	3	9	15	21	5	11	17	23	2	8	14	20	4	10	16	22	6	12	18	24
SEX	M	M	M	M	M	M	M	M	M	M	M	M	F	F	F	F	F	F	F	F	F	F	F	F
SHIFT	1	1	1	1	2	2	2	2	3	3	3	3	1	1	1	1	2	2	2	2	3	3	3	3
LOCATION	P	M	D	2	P	M	D	2	P	M	D	2	P	M	D	2	P	M	D	2	P	M	D	2

AERO-SPACE DIVISION
THE BOEING COMPANY

TRAINING SECTION
INDUSTRIAL RELATIONS

DECISION MATRIX

LOCATION	MALE			FEMALE			SEX
	1	2	3	1	2	3	SHIFT
PLT 2	1	3	5	2	4	6	
MPC	7	9	11	8	10	12	
DC	13	15	17	14	16	18	
201	19	21	23	20	22	24	

DECISION MATRIX

LOCATION	1		2		3		SHIFT
	M	F	M	F	M	F	SEX
PLT 2	1	2	3	4	5	6	
MPC	7	8	9	10	11	12	
DC	13	14	15	16	17	18	
201	19	20	21	22	23	24	

DECISION MATRIX

	PLT 2			MPC			DC			201		
	1	2	3	1	2	3	1	2	3	1	2	3
MALE	1	3	5	7	9	11	13	15	17	19	21	23
FEMALE	2	4	6	8	10	12	14	16	18	20	22	24

FOR TRAINING PURPOSES ONLY

TRAINING SECTION
INDUSTRIAL RELATIONS

MATRIX METHOD OF TABLE REDUCTION

EXAMPLE: LABOR ACCOUNTING ADJUSTMENTS

REDUCE TO SIMPLE FORM A TABLE WHOSE CONDITIONS ARE

	PARAMETER	VALVES		CODE
1.	LABOR ACCOUNT	ENGINEERING		(E)
		SUSPENSE		(S)
		OTHER		(O)
2.	APPLICABLE TO PROGRAM	YES		P
		NO		N.P.
3.	MAN HOURS	≤ 50		≤ 50
		> 50	50	> 50
4.	PRIOR YEAR ACCOUNT	YES		P.Y.
		NO		C.Y.

AERO-SPACE DIVISION
THE BOEING COMPANY

LABOR ACCOUNTING ADJUSTMENTS

1.

		P			N.P.		
		O	E	S	O	E	S
C.Y.	< 50	3	6	7	4	6	7
	≥ 50	1	6	7	2	6	7
P.Y.	< 50	5	6	7	5	6	7
	≥ 50	5	6	7	5	6	7

NUMBERS REFER TO SPECIFIC SETS OF ACTIONS

ACTION SETS

	1	2	3	4	5	6	7
OVERHEAD ACCTG APPROVAL					X		X
PROG. FIN CONT. APPROVAL				X		X	
FORM U3-4600-4510				X	X		
FORM U3-4600-4500							
PROCESS PER O.P. 250-016	X					X	X
REFER TO ENGR. COST & SCH.		X					
REFER TO OVERHEAD ACCTG.			X				

LABOR ACCOUNTING ADJUSTMENTS

2.

		O		E		S	
		P	NP	P	NP	P	NP
C. Y.	< 50	3	4	6	6	7	7
	≥ 50	1	2	6	6	7	7
P. Y.	< 50	5	5	6	6	7	7
	≥ 50	5	5	6	6	7	7

NUMBERS REFER TO SPECIFIC SETS OF ACTIONS

ACTION SETS

	1	2	3	4	5	6	7
OVERHEAD ACCTG. APPROVAL					X		X
PROG. FIN CONT. APPROVAL				X		X	
FORM U3-4600-4510				X	X		
FORM U3-4600-4500							
PROCESS PER O. P. 250-016	X					X	X
REFER TO ENGR. COST & SCH.		X					
REFER TO OVERHEAD ACCTG.			X				

LABOR ACCOUNTING ADJUSTMENTS

3.

		O		E	S
		P	NP		
CY	< 50	3	4	6	7
	≥ 50	1	2		
PY		5			

NUMBERS REFER TO SPECIFIC SETS OF ACTIONS

ACTION SETS

	1	2	3	4	5	6	7
OVERHEAD ACCTG. APPROVAL					X		X
PROG. FIN CONT. APPROVAL				X		X	
FORM U3-4600-4510				X	X		
FORM U3-4600-4500							
PROCESS PER O.P. 250-016	X					X	X
REFER TO ENGR. COST & SCH.		X					
REFER TO OVERHEAD ACCTG.			X				

LABOR ACCOUNTING ADJUSTMENTS

	7	6	5	1	2	3	4
APPLICABLE TO PROGRAM	-	-	-	Y	N	Y	N
LABOR ACCOUNT							
ENGINEERING	N	Y	N	N	N	N	N
SUSPENSE	Y	N	N	N	N	N	N
OTHER	N	N	Y	Y	Y	Y	Y
MANHOURS	-	-	-	≥ 50	≥50	< 50	< 50
PRIOR YEAR ACCOUNT	-	-	Y	N	N	N	N
OVERHEAD ACCTG. APPROVAL					X		X
PROG. FIN. CONT. APPROVAL				X		X	
FORM U3-4600-4510				X	X		
FORM U3-4600-4500						X	X
PROCESS PER O.P. 250-016	X						
REFER TO ENGR. COST & SCH.		X					
REFER TO OHD. ACCTG.			X				

"ELSE" RULE

- LAST RULE IN THE TABLE
- SINGLE CONDITION - NO OTHER RULES APPLY TO THE CASE BEING EXAMINED
- USES:

I RULES IDENTIFY ALL POSSIBLE COMBINATIONS OF CONDITIONS:

"ELSE" INDICATES AN ERROR.

II RULES IDENTIFY A PARTIAL SET OF POSSIBLE COMBINATIONS (e.g. EXCEPTIONS):

"ELSE" INDICATES THE REMAINING POSSIBILITIES PLUS ERRORS.

AERO-SPACE DIVISION
THE BOEING COMPANY

TRAINING SECTION
INDUSTRIAL RELATIONS

FOR TRAINING PURPOSES ONLY

TRAINING SECTION
INDUSTRIAL RELATIONS

THE EXCEPT STATEMENT

EXCEPT IS A SYNONYM FOR "AND NOT".

IT SUBTRACTS FROM ONE CLASS ALL ITEMS COMMON TO THE EXCEPTED CLASS.

IF THE EXCEPTION RELATES TO ONLY ONE PARAMETER, THE RULE IS EXPRESSED BY USING THE NEGATIVE VALUE OF THE EXCEPTED PARAMETER.

AERO-SPACE DIVISION
THE BOEING COMPANY

IF THE EXCEPTION RELATES TO TWO PARAMETERS CONNECTED BY OR, ONLY ONE RULE IS NEEDED TO EXPRESS THE EXCEPTION STATEMENT.

EXAMPLE: THE FOLLOWING STATEMENTS ARE EQUIVALENT.

1. SHIP BY RAIL ALL GOVERNMENT FURNISHED PARTS EXCEPT THOSE HAVING PRIORITY STATUS OR WEIGHING LESS THAN 15 POUNDS.

2. SHIP BY RAIL ALL GOVERNMENT FURNISHED PARTS HAVING NO PRIORITY STATUS AND WEIGHING 15 POUNDS OR MORE.

IF THE EXCEPTION RELATES TO TWO PARAMETERS CONNECTED BY AND, TWO RULES ARE NEEDED TO EXPRESS THE EXCEPTION STATEMENT.

EXAMPLE: THE FOLLOWING STATEMENTS ARE EQUIVALENT.

1. SHIP BY RAIL ALL PURCHASED PARTS EXCEPT THOSE HAVING PRIORITY STATUS AND WEIGHING LESS THAN 15 POUNDS.

2. SHIP BY RAIL ALL PURCHASED PARTS HAVING NO PRIORITY STATUS OR WEIGHING 15 POUNDS OR MORE.

TRAINING SECTION
INDUSTRIAL RELATIONS
AERO-SPACE DIVISION
THE BOEING COMPANY

	PURCH. PART		GOVT. FURN.	
	≥ 15	< 15	≥ 15	< 15
PRIORITY	R	A	A	A
NON PRIORITY	R	R	R	A

DECISION MATRIX

	1	2	3	ELSE
PURCH. PART	Y	Y		
GOVT. FURN.			Y	
< 15 POUNDS	N	-	N	
PRIORITY	-	N	N	
RAIL	X	X	X	
AIR				X

DECISION TABLE

USE OF THE DECISION MATRIX TO ANALYSE THE EXCEPT STATEMENT

AERO-SPACE DIVISION
THE BOEING COMPANY

TRAINING SECTION
INDUSTRIAL RELATIONS

DECISION MATRIX

		B				$\bar{B}$			
		C		$\bar{C}$		C		$\bar{C}$	
		E	$\bar{E}$	E	$\bar{E}$	E	$\bar{E}$	E	$\bar{E}$
D	A	X[12] 1	X[12] 2	X[12] 3	X[12] 4				
	$\bar{A}$								
$\bar{D}$	A					X[10] 5			
	$\bar{A}$					X[11-10] 6	X[11] 7	X[11] 8	X[11] 9

DECISION TABLE EQUIVALENT

	1 (12)	2 (12)	3 (12)	4 (12)	5 (10)	6 (10-11)	7 (11)	8 (11)	9 (11)	ELSE
A	Y	Y	Y	Y	Y	N	N	N	N	
B	Y	Y	Y	Y	N	N	N	N	N	
C	Y	Y	N	N	Y	Y	Y	N	N	
D	Y	Y	Y	Y	N	N	N	N	N	
E	Y	N	Y	N	Y	Y	N	Y	N	
ACTION	X	X	X	X	X	X	X	X	X	O

10	11	12	ELSE
-	N	Y	
N	N	Y	
Y	-	-	
N	N	Y	
Y	-	-	
X	X	X	O

NINE RULES REDUCED TO THREE

REDUCED FLOW DIAGRAM

DIRECT EQUIVALENT OF REDUCED DECISION TABLE

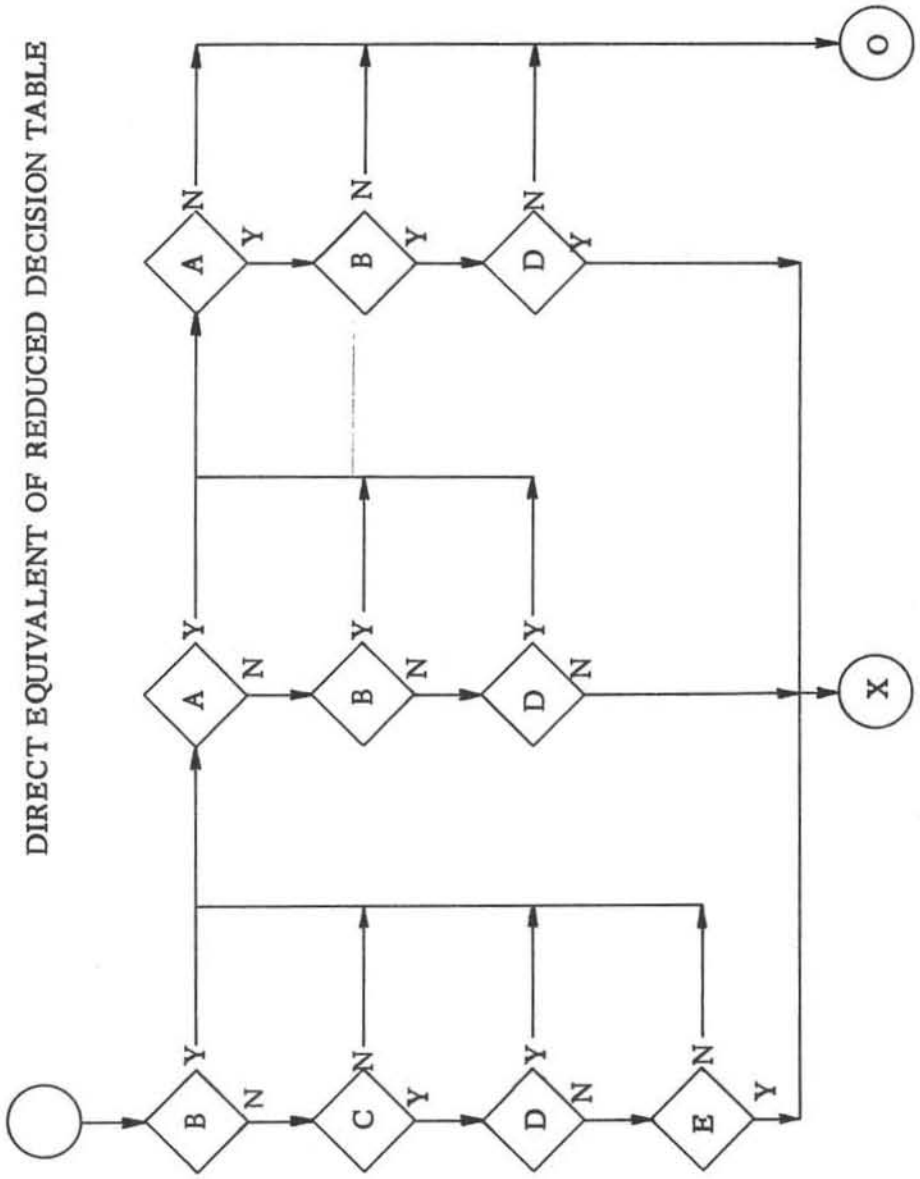

REDUCED FLOW DIAGRAM EQUIVALENT

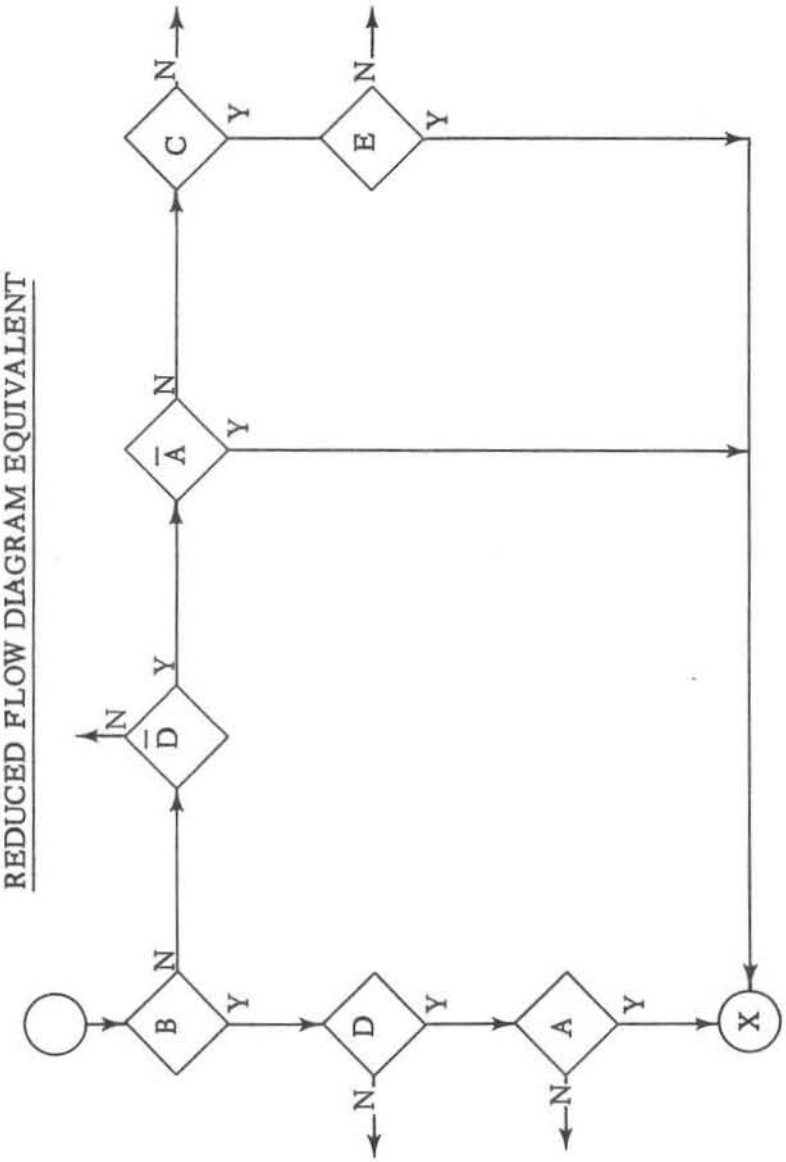

LOGIC TREE EQUIVALENT

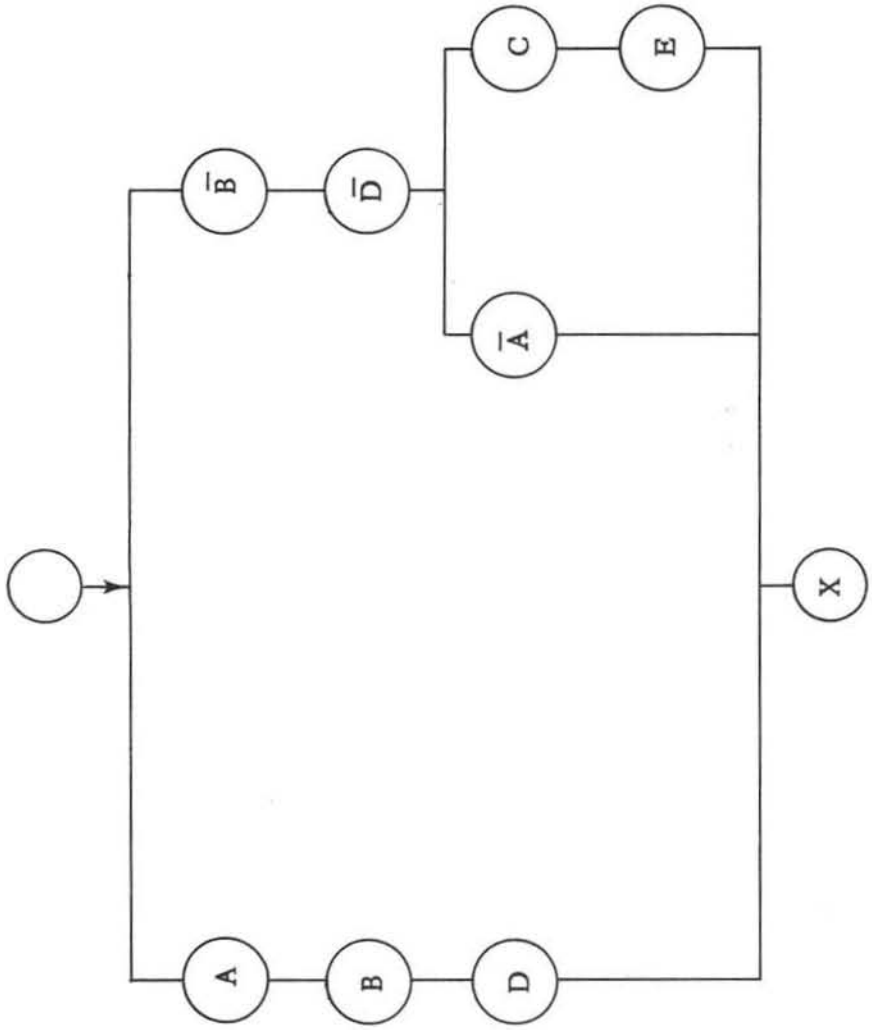

COMPARATIVE OPERATORS

MEANING	CODE	SYMBOL
EQUAL TO	EQ	=
NOT EQUAL TO	NE	≠
LESS THAN	LT	<
LESS THAN OR EQUAL TO	LE	≤
GREATER THAN	GT	>
GREATER THAN OR EQUAL TO	GE	≥

AERO-SPACE DIVISION
THE BOEING COMPANY

TRAINING SECTION
INDUSTRIAL RELATIONS

FOR TRAINING PURPOSES ONLY

TRAINING SECTION
INDUSTRIAL RELATIONS

MANAGEMENT ACTION RULES

1. THE ACTUAL FLOW TIME EXCEEDS BY TEN DAYS OR MORE THE ALLOTTED FLOW TIME, AND THE ECD IS HIGHER THAN THE COMPLETION SCHEDULE.
2. THE ACTUAL FLOW TIME EXCEEDS BY TEN DAYS OR MORE THE ALLOTTED FLOW TIME, NO ECD IS GIVEN, AND THE JOB IS BEHIND SCHEDULE.
3. THE JOB IS BEHIND SCHEDULE AND HAS BEEN IN A HELD STATUS FOR MORE THAN NINE DAYS.
4. JOB IS 75 DAYS OR MORE BEHIND SCHEDULE, ALLOTTED FLOW TIME MORE THAN 5 DAYS, TIME IN SHOP EXCEEDS 5 DAYS, AND NO ACCUMULATED HOURS REPORTED IN PAST 24 HOURS.
5. JOB HAS BEEN IN "10" STATUS 3 DAYS OR MORE.

AERO-SPACE DIVISION
THE BOEING COMPANY

FOR TRAINING PURPOSES ONLY

TRAINING SECTION
INDUSTRIAL RELATIONS

CALCULATION FOR RULE
NO'S 1 & 2

FROM PROCEDURE: $F/T \geq 10 + C/S - SD$

THEN: $C/S - SD + 10 \leq F/T$

AND: $C/S - SD \leq F/T - 10$

OR: $C/S - SD < F/T - 9$

F/T = ACTUAL FLOW TIME

C/S = COMPLETION SCHEDULE

SD = START DATE

AERO-SPACE DIVISION
THE BOEING COMPANY

FOR TRAINING PURPOSES ONLY

TRAINING SECTION
INDUSTRIAL RELATIONS

MANAGEMENT ACTION RULES

			RULE 1		RULE 2		RULE 3		RULE 4		RULE 5		ELSE
C/S-SD			LE	FT-10	LE	FT-10			GT	5			
ECD			GT	CS	EQ	BLANK							
D/S	GT							9				2	
M DAY	GT	CS				Y		Y					
HRS. PREF.	EQ	--								N			
F/T	GT	5								Y			
SC							GT	10			EQ	10	
M DAY -CS	GE									75			
LIST ON MGMT ACTION REPORT			X		X		X		X				
DO NOT LIST ON MGMT ACTION REPORT													X

AERO-SPACE DIVISION
THE BOEING COMPANY

LIMITED ENTRY

	1	2	3	4	5	6
R						
a	Y	Y				
b			Y	Y		
c					Y	Y
S						
d	Y		Y		Y	
e		Y		Y		Y
m	X	X		X		X
n			X		X	

EXTENDED ENTRY

	1	2	3	4	5	6
R	a	a	b	b	c	c
S	d	e	d	e	d	e
	m	m	n	m	n	m

AERO-SPACE DIVISION
THE BOEING COMPANY

TRAINING SECTION
INDUSTRIAL RELATIONS

DECISION MATRIX

		S	
		d	e
R	a	m	m
	b	n	n
	.c	n	m

REDUCED EXTENDED .

ENTRY TABLES

	1	2	ELSE
R	a	-	
S	-	e	
	m	m	n

	1	ELSE
R	$\bar{a}$	
S	d	
	n	m

IV THIRD SESSION

Travel Example IV-1
Insurance Example IV-4
True Size Angle Example IV-7
Computer Uses of Decision Tables IV-8
Steps in Preparing Decision Table IV-9
Application of Decision Tables IV-10
Advantages of Decision Tables IV-11

SEQUENCE OF TABLE STRUCTURING

1. DETERMINE OBJECTIVES (ACTIONS)
2. IDENTIFY GOVERNING CONDITIONS
3. GROUP CONDITIONAL PARAMETERS
4. DETERMINE THE QUANTITY OF POSSIBLE CONDITION COMBINATIONS.
5. RELATE ACTIONS TO CONDITIONS
6. REDUCE AND SIMPLIFY