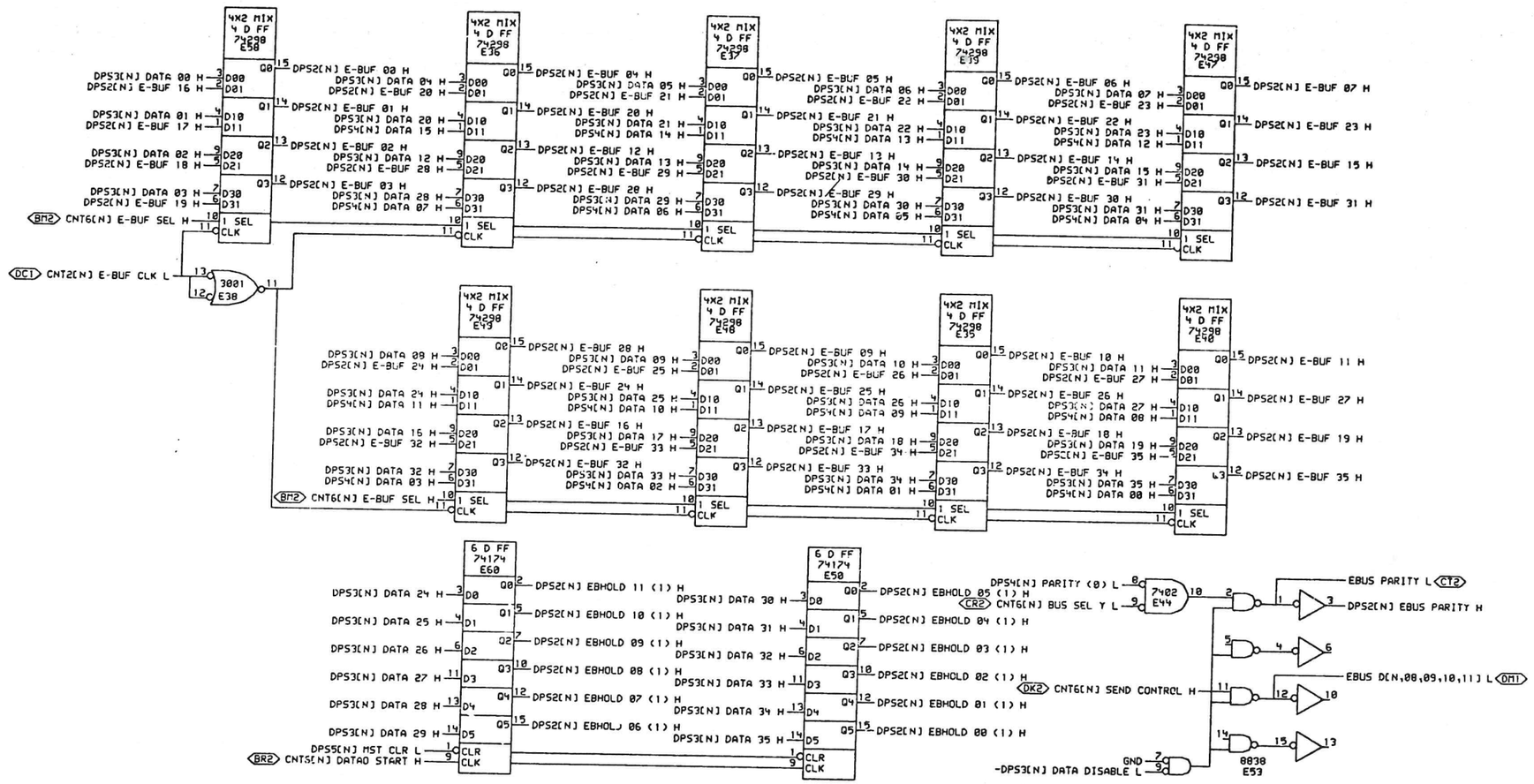

12 OF 8

"THIS DRAWING AND SPECIFICATIONS, HEREIN, ARE THE PROPERTY OF DIGITAL EQUIPMENT CORPORATION AND SHALL NOT BE REPRODUCED OR COPIED OR USED IN WHOLE OR IN PART AS THE BASIS FOR THE MANUFACTURE OR SALE OF ITEMS WITHOUT WRITTEN PERMISSION. COPYRIGHT © 1975, DIGITAL EQUIPMENT CORPORATION"

REVISIONS					
CHK	CHANGE NO.	REV	CHK	CHANGE NO	REV
	M8552-00005	A		M8552-00005	A1
E. Wilson	4/7/75				
W. BRUCKER			W. BRUCKER		

digital

DRW. D. Stephenson DATE 5/23/75 ENG. DATE 5/24/75
CHK. D. Stephenson DATE 5/23/75 BOARD LOCATION: SHEET 1 OF 1
DPS2X(4,426) 21-MAY-75 09:26 NEXT HIGHER ASSEMBLY: B-DD-M8552-0
FIRST USED ON OPTION/MODEL: DTE20

TITLE: DATA PATH AND STATUS

SIZE	CODE	NUMBER	REV.
D	CS	M8552-0-DPS2	A1

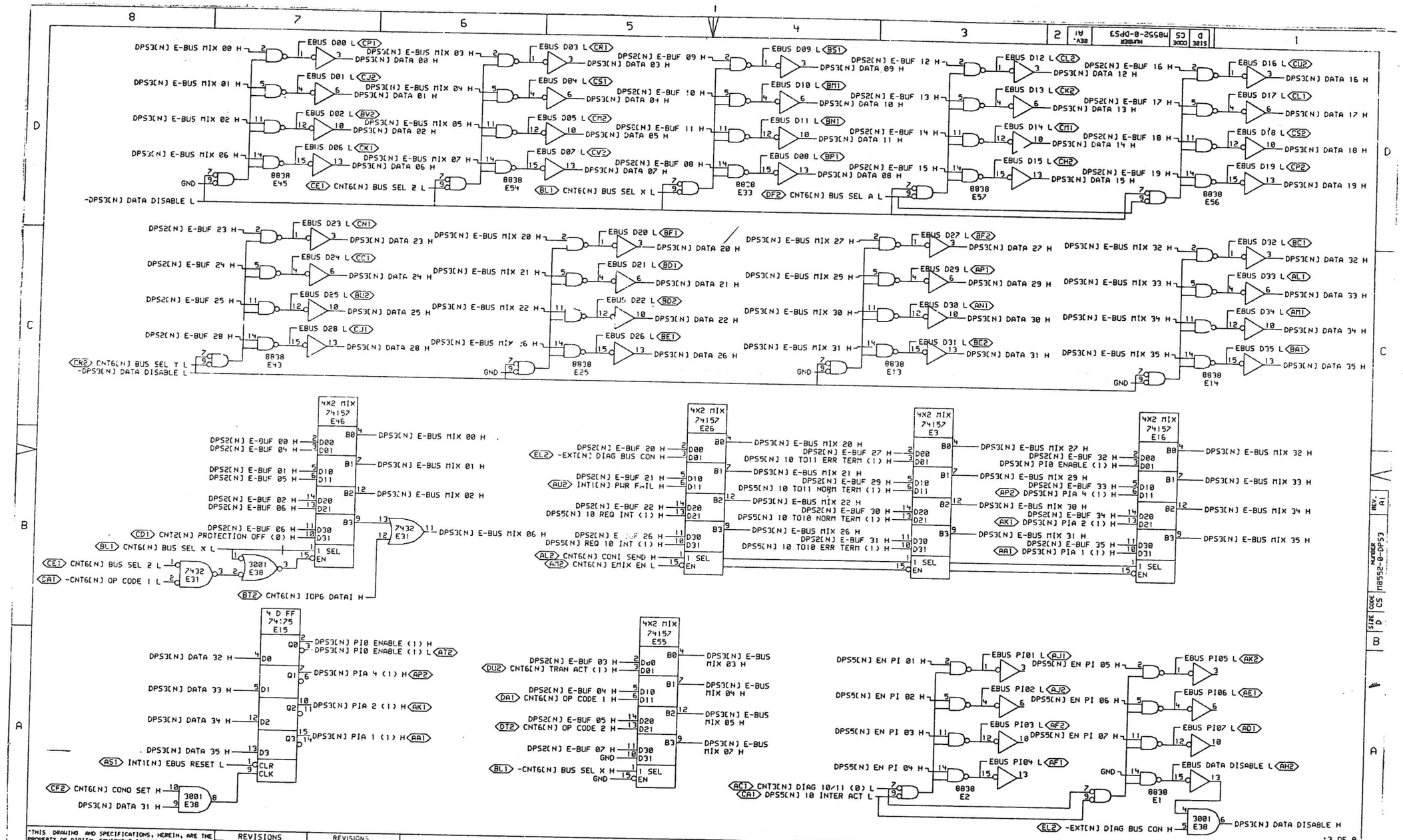

"THIS DRAWING AND SPECIFICATIONS, HEREIN, ARE THE PROPERTY OF DIGITAL EQUIPMENT CORPORATION AND SHALL NOT BE REPRODUCED OR COPIED OR USED IN WHOLE OR IN PART AS THE BASIS FOR THE MANUFACTURE OR SALE OF ITEMS WITHOUT WRITTEN PERMISSION. COPYRIGHT © 1975, DIGITAL EQUIPMENT CORPORATION"

REVISIONS			REVISIONS		
CHK	CHANGE NO.	REV	CHK	CHANGE NO	REV
	M8552-XXX/02	2		M8552-0-DPS3	A1
	W. PAUL KERR				

digital

DRN	DATE 5/24/75	ENG.	DATE 5/24/75
CHK	DATE 5/24/75	BOARD LOCATION:	
		SHEET 1 OF 1	
DPS3X(4,426)	24-MAY-75 09:22	NEXT HIGHER ASSEMBLY:	
FIRST USED ON OPTION/MODEL: DTE20		B-DD-M8552-0	

TITLE: DATA PATH AND STATUS

SIZE	CODE	NUMBER	REV.
D	CS	M8552-0-DPS3	A1

3 OF 8

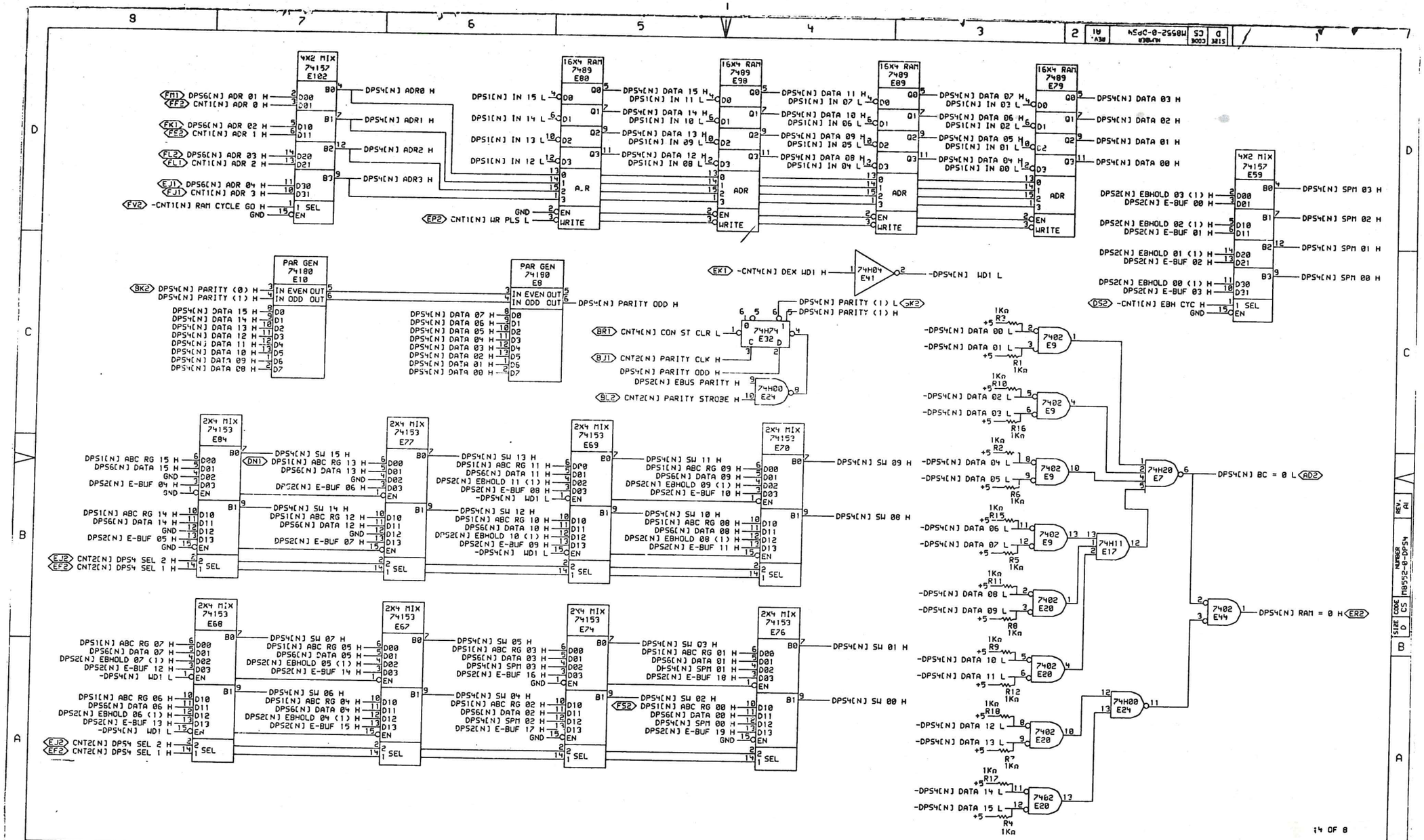

"THIS DRAWING AND SPECIFICATIONS, HEREIN, ARE THE PROPERTY OF DIGITAL EQUIPMENT CORPORATION AND SHALL NOT BE REPRODUCED OR COPIED OR USED IN WHOLE OR IN PART AS THE BASIS FOR THE MANUFACTURE OR SALE OF ITEMS WITHOUT WRITTEN PERMISSION. COPYRIGHT © 1975, DIGITAL EQUIPMENT CORPORATION"

REVISIONS			REVISIONS		
CHK	CHANGE NO.	REV	CHK	CHANGE NO	REV
	M8552-CCCC2	A		M8552-JJJJ5	A1

digital

DPS4X(1,426) 21-MAY-75 09:29

DRN	DATE	ENG.	DATE
CHK	DATE	BOARD LOCATION:	
		SHEET 1 OF 1	
FIRST USED ON OPTION/MODEL: DTE20		NEXT HIGHER ASSEMBLY: B-DD-M8552-0	

TITLE: DATA PATH AND STATUS

SIZE	CODE	NUMBER	REV.
D	CS	M8552-0-DPS4	A1

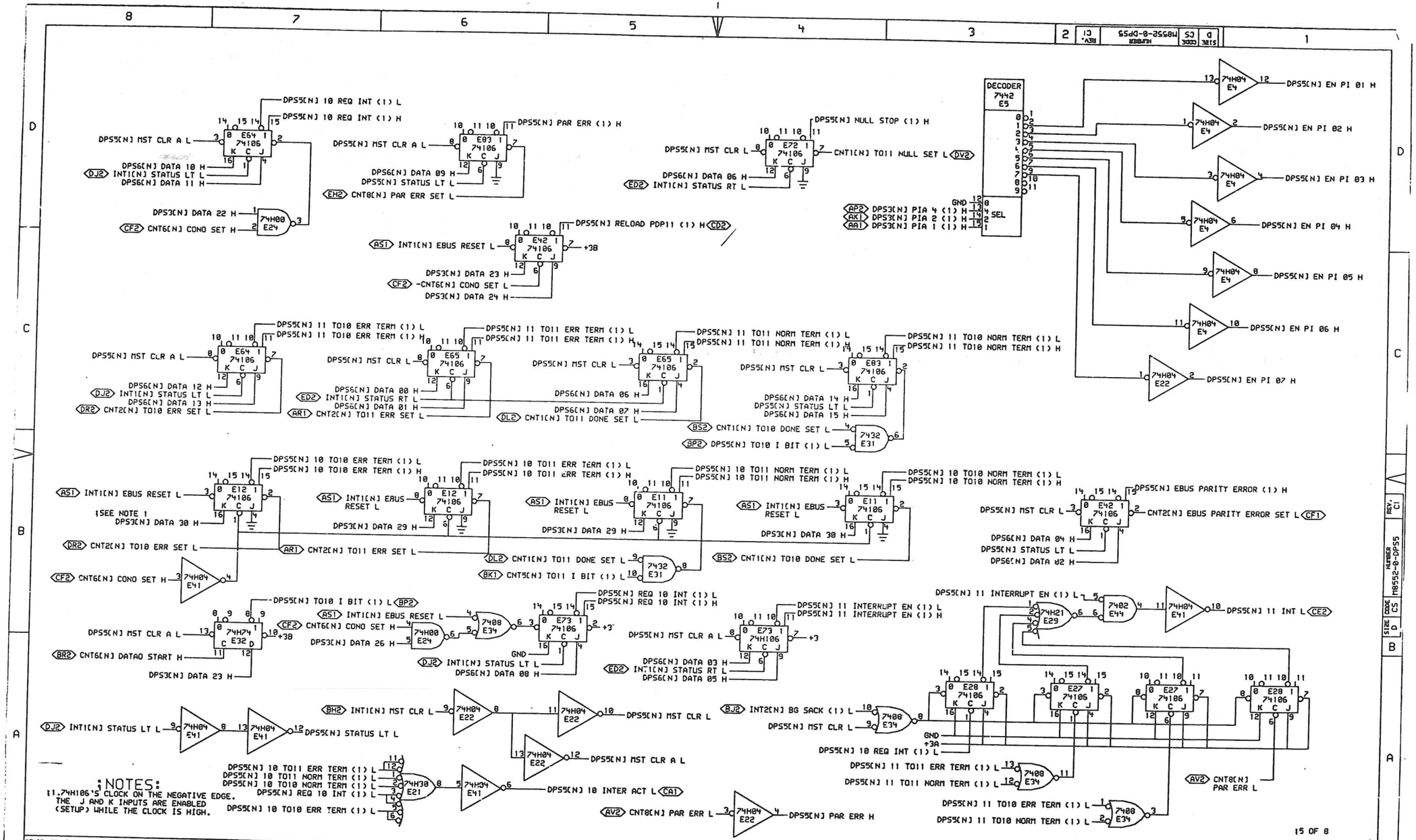

;NOTES:
1.74H106'S CLOCK ON THE NEGATIVE EDGE. THE J AND K INPUTS ARE ENABLED (SETUP) WHILE THE CLOCK IS HIGH.

"THIS DRAWING AND SPECIFICATIONS, HEREIN, ARE THE PROPERTY OF DIGITAL EQUIPMENT CORPORATION AND SHALL NOT BE REPRODUCED OR COPIED OR USED IN WHOLE OR IN PART AS THE BASIS FOR THE MANUFACTURE OR SALE OF ITEMS WITHOUT WRITTEN PERMISSION. COPYRIGHT © 1976, DIGITAL EQUIPMENT CORPORATION"

REVISIONS			REVISIONS		
CHK	CHANGE NO.	REV	CHK	CHANGE NO	REV
-	M8552-00-004	C		M8552-00-035	C1
	BF CPERT			H BSUGERT	

digital

DRW. | DATE 07-JUN-76 | ENG | DATE 21-JUN-76
CHK | DATE 6/8/76 | BOARD LOCATION: | SHEET 1 OF 1
DPS5X.DRW(4,426) 02-JUN-76 15:32 | NEXT HIGHER ASSEMBLY: B-DD-M8552-0
FIRST USED ON OPTION/MODEL: DTE20

TITLE: DATA PATH AND STATUS

SIZE	CODE	NUMBER	REV.
D	CS	M8552-0-DPS5	C1

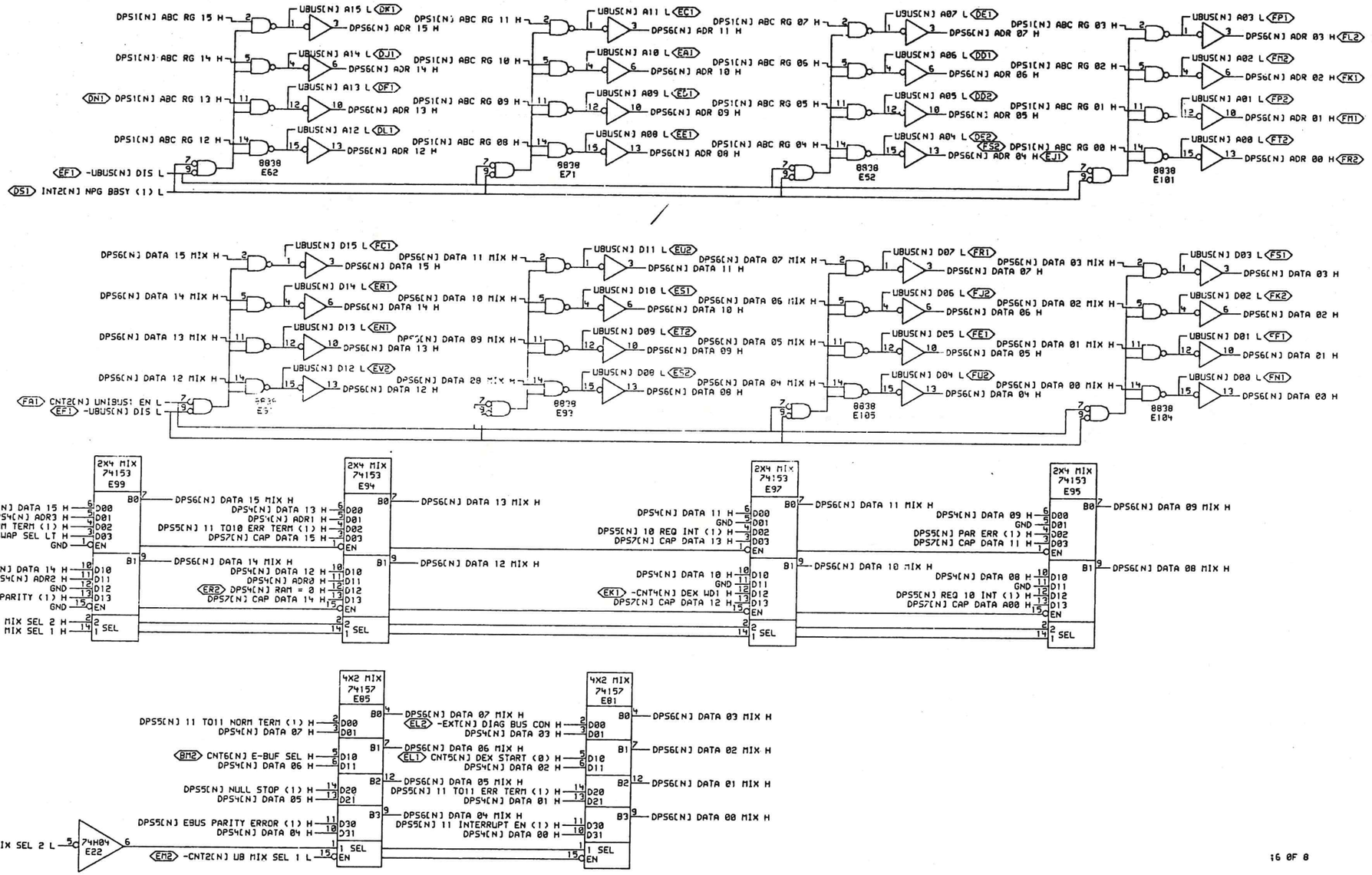

"THIS DRAWING AND SPECIFICATIONS, HEREIN, ARE THE PROPERTY OF DIGITAL EQUIPMENT CORPORATION AND SHALL NOT BE REPRODUCED OR COPIED OR USED IN WHOLE OR IN PART AS THE BASIS FOR THE MANUFACTURE OR SALE OF ITEMS WITHOUT WRITTEN PERMISSION. COPYRIGHT © 1975, DIGITAL EQUIPMENT CORPORATION"

REVISIONS			REVISIONS		
CHK	CHANGE NO.	REV	CHK	CHANGE NO	REV
	M8552-0-DP56	A		M8552-0-DP56	A1
	W BRUCKERT			JW BRUCKERT	

DRN	DATE	ENG.	DATE	TITLE:	DATA PATH AND STATUS
CHK	DATE	BOARD LOCATION:			
		SHEET 1 OF 1			
DPS6X(4,426)	24-MAY-75 09:32	NEXT HIGHER ASSEMBLY:		SIZE D	CODE CS
FIRST USED ON OPTION/MODEL:	DTE20	B-DD-M8552-0		NUMBER M8552-0-DPS6	REV. A1

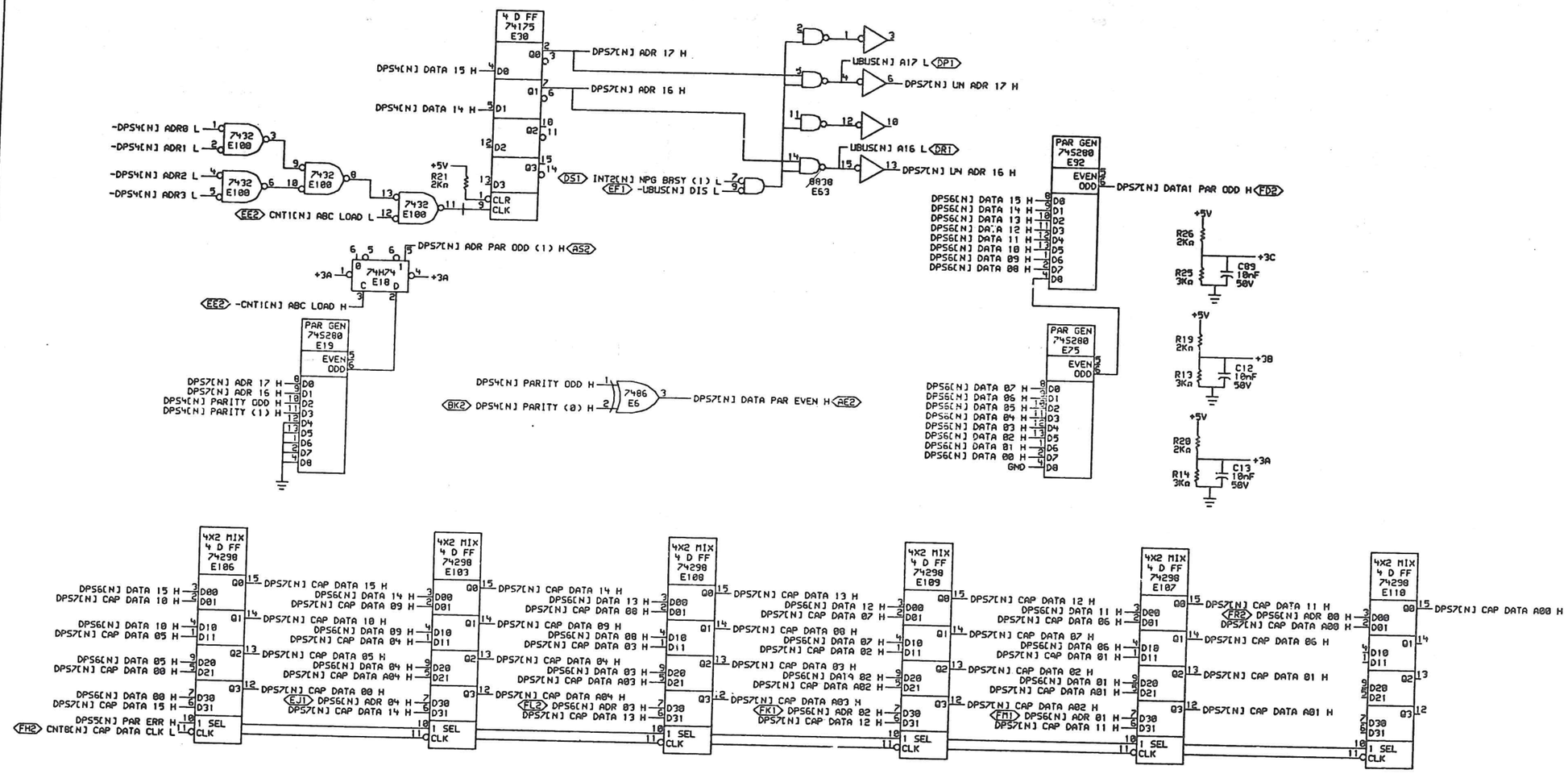

"THIS DRAWING AND SPECIFICATIONS, HEREIN, ARE THE PROPERTY OF DIGITAL EQUIPMENT CORPORATION AND SHALL NOT BE REPRODUCED OR COPIED OR USED IN WHOLE OR IN PART AS THE BASIS FOR THE MANUFACTURE OR SALE OF ITEMS WITHOUT WRITTEN PERMISSION.
COPYRIGHT © 1976, DIGITAL EQUIPMENT CORPORATION"

REVISIONS			REVISIONS		
CHK	CHANGE NO.	REV	CHK	CHANGE NO	REV
-	M8552-00005	C1			

DRW. DATE 07-JUN-76 ENG. DATE 21 JUN 76
CHK. DATE 6/8/76 BOARD LOCATION: SHEET 1 OF 1
DPS7X.DRW[4,426] 28-MAY-76 17:18 NEXT HIGHER ASSEMBLY: B-DD-M8552-0
FIRST USED ON OPTION/MODEL: DTE20

TITLE: DATA PATH AND STATUS

SIZE	CODE	NUMBER	REV.
D	CS	M8552-0-DPS7	C1

"THIS DRAWING AND SPECIFICATIONS, HEREIN, ARE THE PROPERTY OF DIGITAL EQUIPMENT CORPORATION AND SHALL NOT BE REPRODUCED OR COPIED OR USED IN WHOLE OR IN PART AS THE BASIS FOR THE MANUFACTURE OR SALE OF ITEMS WITHOUT WRITTEN PERMISSION.
COPYRIGHT © 1976, DIGITAL EQUIPMENT CORPORATION"

REVISIONS				REVISIONS		
CHK	CHANGE NO.	REV		CHK	CHANGE NO	REV
—	M8552-0-DPS8	C			M8552-0-DPS8	C1
	W. BRUCKERT				W. BRUCKERT	

digital

DRN. DATE 07-JUN-76 ENG. DATE 31 JUN 76
CHK. DATE 6/8/76 SIZE/ARO LOCATION: SHEET 1 OF 1
DFS86X.CRW 4.426 | 10-JUN-76 14:12 | NEXT HIGHER ASSEMBLY:
FIRST USED ON OPTION/MODEL: DTE20 | B-DD-M8552-0

10 OF 0

TITLE: DATA PATH & STATUS PWR, CAP & GND

SIZE	CODE	NUMBER	REV.
D	CS	M8552-0-DPS8	C1

REVISION CONTROL SHEET

CUSTOMER PRINT SET	MFG SET	DRAWING NO	NO OF SHT	DESCRIPTION	OPTION NO/FILE DATE	REVISIONS (NEW LAYOUT VERSION)	
		M8552	-	MODULE REVISION		F	F
		K-PI-M8552-Ø-DBP	2	1Ø/11 DATA PATH			F
		D-UA-M8552-Ø-Ø	5	1Ø/11 DATA PATH		E	F
		D-CS-M8552-Ø-DPS1	1	DATA PATH AND STATUS		C	D
		D-CS-M8552-Ø-DPS2	1	DATA PATH AND STATUS		B	B
		D-CS-M8552-Ø-DPS3	1	DATA PATH AND STATUS		B	B
		D-CS-M8552-Ø-DPS4	1	DATA PATH AND STATUS		B	B
		D-CS-M8552-Ø-DPS5	1	DATA PATH AND STATUS		D	D
		D-CS-M8552-Ø-DPS6	1	DATA PATH AND STATUS		B	B
		D-CS-M8552-Ø-DPS7	1	DATA PATH AND STATUS		D	D
		D-CS-M8552-Ø-DPS8	1	DATA PATH AND STATUS, PWR, CAP & GND		D	D
		K-CO-M8552-Ø-4	1	10/11 DATA PATH		C	C
		D-AH-M8552-Ø-5	4	10/11 DATA PATH		B	B
		~~R-WH-M8552-Ø-8~~	~~1~~	~~MODULE ECO HISTORY~~		~~-~~	~~-~~
		5010516	-	ETCH CIRCUIT BOARD		C	C
		P00-M8552-ØØ		PROCESS SHEET (REF ONLY)		-	-

CUSTOMER PRINT SET CODES
X = PRINT OF DOCUMENT INCLUDED IN PRINT SET
C = INCLUDES ALL PRINTS INDICATED ON DOCUMENT
S = CONFIDENTIAL AUTHORIZED SIGNATURE REQUIRED

ECO NO		
	00005	MR006

TITLE		SIZE	CODE	NUMBER	REV
10/11 DATA PATH	SHEET 3 OF 3	B	DD	M8552-Ø	F

MR

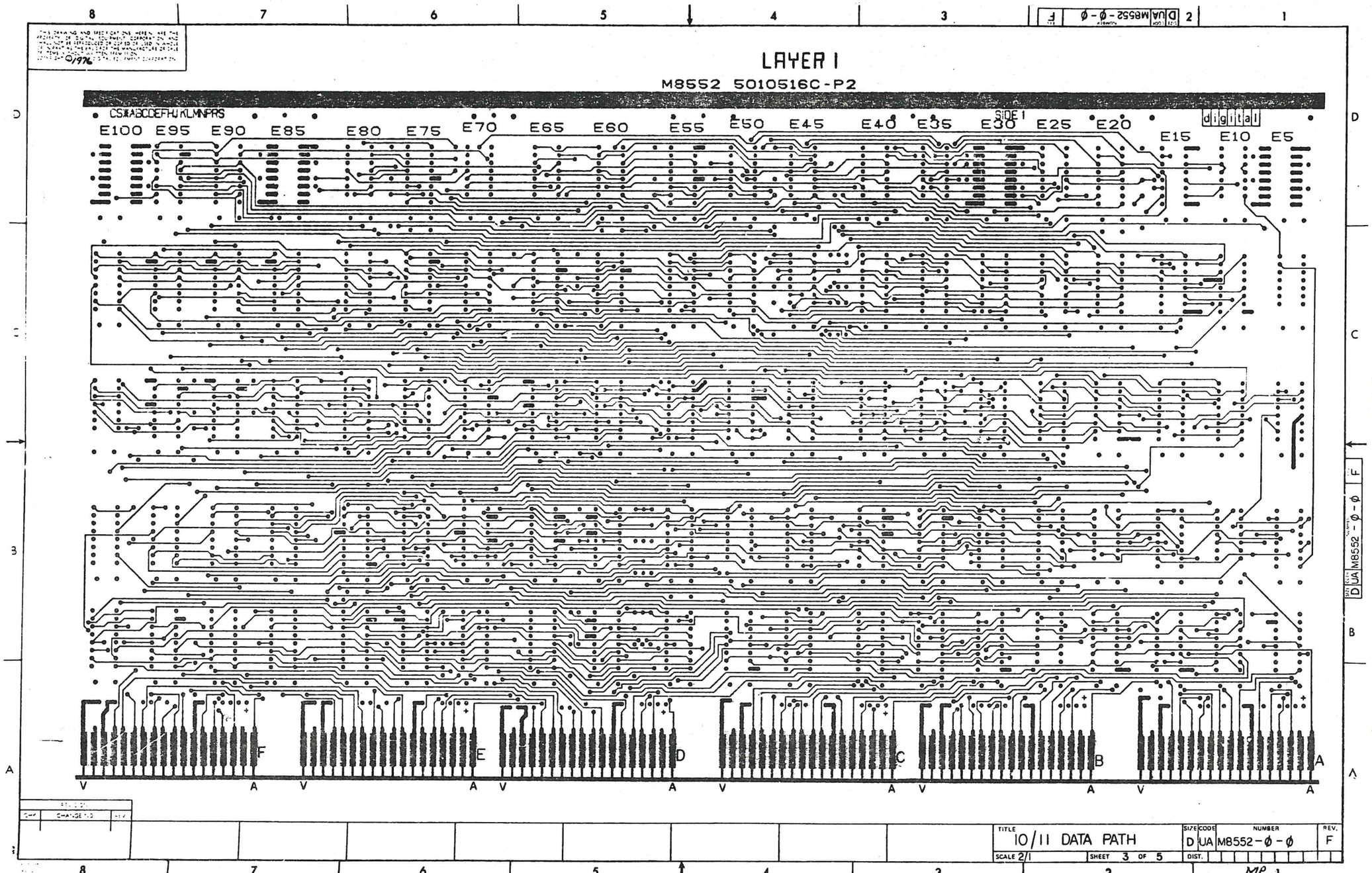
LAYER 1
M8552 5010516C-P2
SIDE 1
digital
CS*ABCDEFHJKLMNPRS
E100 E95 E90 E85 E80 E75 E70 E65 E60 E55 E50 E45 E40 E35 E30 E25 E20 E15 E10 E5
F E D C B A
V A V A V A V A V A V A
TITLE 10/11 DATA PATH
SIZE D CODE UA NUMBER M8552-Ø-Ø REV. F
SCALE 2/1 SHEET 3 OF 5 DIST.
MR 1

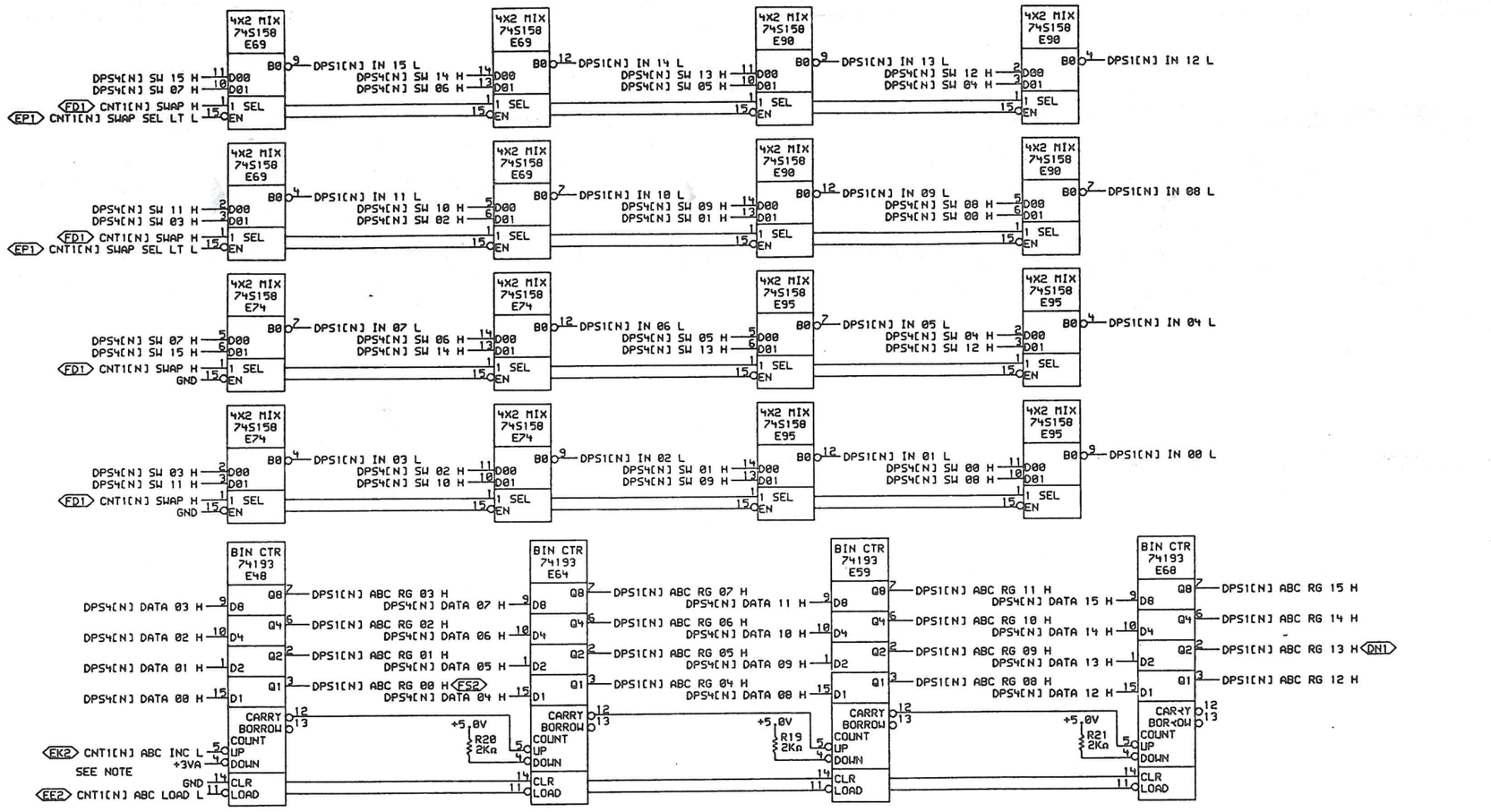

NOTES:

THE 74193 UP/DOWN COUNTER HAS THE FOLLOWING CHARACTERISTICS.

UP-COUNT: SETS UP WHEN LOW AND COUNTS ON THE POSITIVE TRANSITION OF THE UP COUNT PULSE.

LOAD: SETS UP WHEN LOW AND LOADS ON THE POSITIVE TRANSITION OF THE LOAD PULSE.

CARRY: IF A CARRY IS GENERATED THE CARRY WILL GO LOW WHEN THE UP INPUT IS LOW AND WILL GO HIGH WHEN THE UP INPUT GOES HIGH.

:WIRE JUMPERS W1-W7 ARE FACTORY SET.

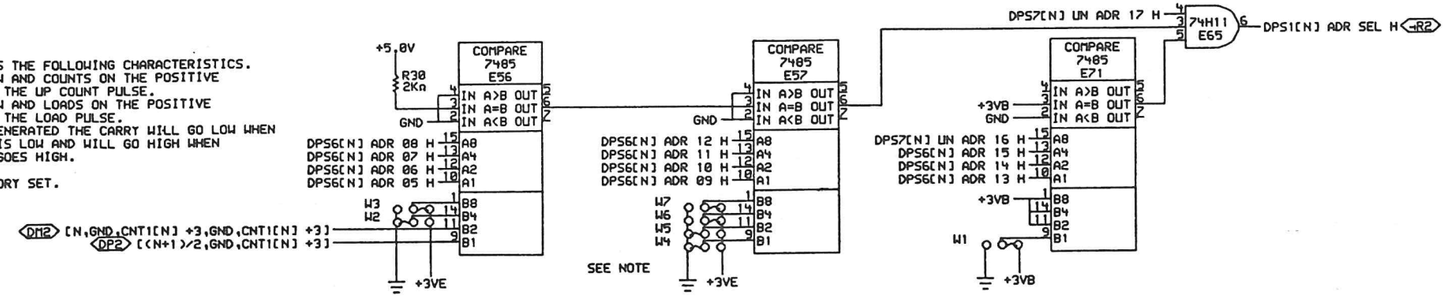

DTE SLOT LOCATIONS

TYPE	N=	SLOT
SINGLE	1	2AF0
MULTIPLE	1	2AF03
	2	2AF05
	3	2AF08
	4	2AF10

1 OF 8

"THIS DRAWING AND SPECIFICATIONS, HEREIN, ARE THE PROPERTY OF DIGITAL EQUIPMENT CORPORATION AND SHALL NOT BE REPRODUCED OR COPIED OR USED IN WHOLE OR IN PART AS THE BASIS FOR THE MANUFACTURE OR SALE OF ITEMS WITHOUT WRITTEN PERMISSION.
COPYRIGHT © 1977, DIGITAL EQUIPMENT CORPORATION"

REVISIONS		
CHK	CHANGE NO.	REV

digital

DRW: DATE 10-FEB-77 ENG: DATE 23-FEB-77
CHK: DATE 2/11/77 BOARD LOCATION:
SHEET 1 OF 1
DPS1RS.DRW[4,613] 09-FEB-77 12:08 NEXT HIGHER ASSEMBLY:
FIRST USED ON OPTION/MODEL: DTE20 B-DD-M8552-0

TITLE: DATA PATH AND STATUS

SIZE	CODE	NUMBER	REV.
D	CS	M8552-0-DPS1	C

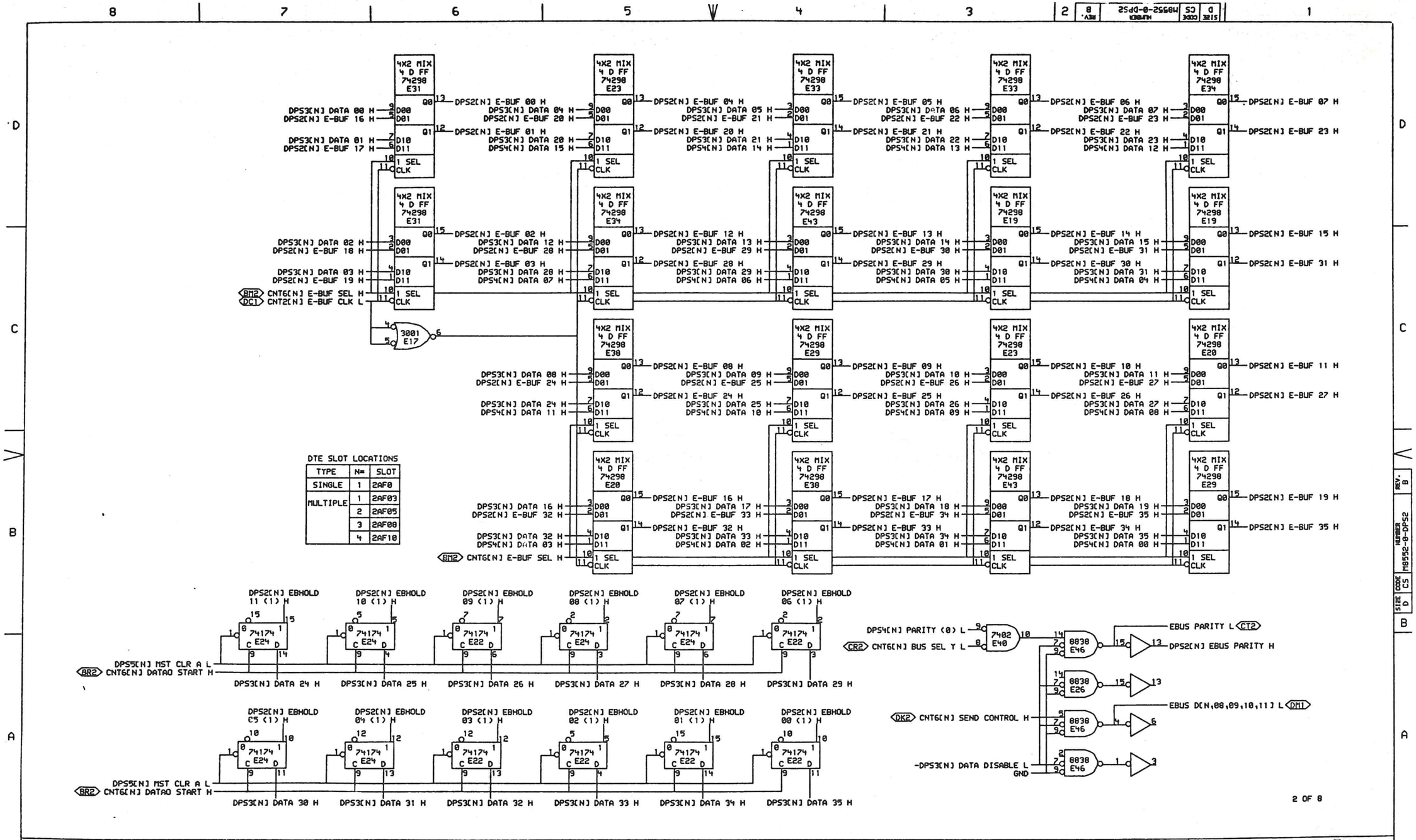

DTE SLOT LOCATIONS

TYPE	N=	SLOT
SINGLE	1	2AF0
MULTIPLE	1	2AF03
	2	2AF05
	3	2AF08
	4	2AF10

"THIS DRAWING AND SPECIFICATIONS, HEREIN, ARE THE PROPERTY OF DIGITAL EQUIPMENT CORPORATION AND SHALL NOT BE REPRODUCED OR COPIED OR USED IN WHOLE OR IN PART AS THE BASIS FOR THE MANUFACTURE OR SALE OF ITEMS WITHOUT WRITTEN PERMISSION. COPYRIGHT © 1977, DIGITAL EQUIPMENT CORPORATION"

REVISIONS		
CHK	CHANGE NO.	REV

M8552-0-DPS2 B
W. BAUCKERT

digital

DRN. L. Gormley DATE 10-FEB-77
CHK'D DATE
ENG. William Bauckert DATE 03FEB77
BOARD LOCATION: SHEET OF
DPS2RS.DRW[4,613] 09-FEB-77 12:58
NEXT HIGHER ASSEMBLY:
FIRST USED ON OPTION/MODEL: DTE20 B-DD-M8552-0

TITLE: DATA PATH AND STATUS

SIZE	CODE	NUMBER	REV.
D	CS	M8552-0-DPS2	B

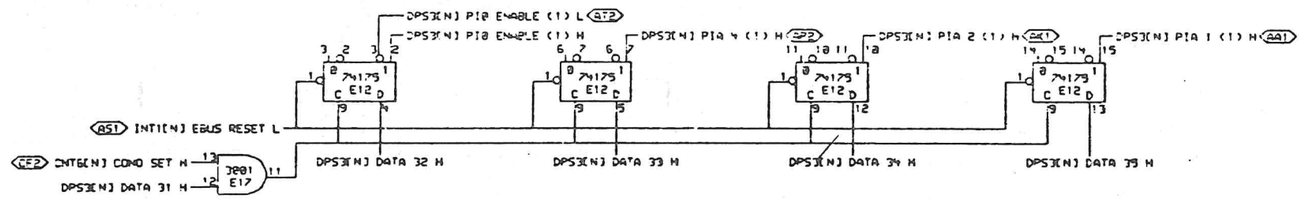

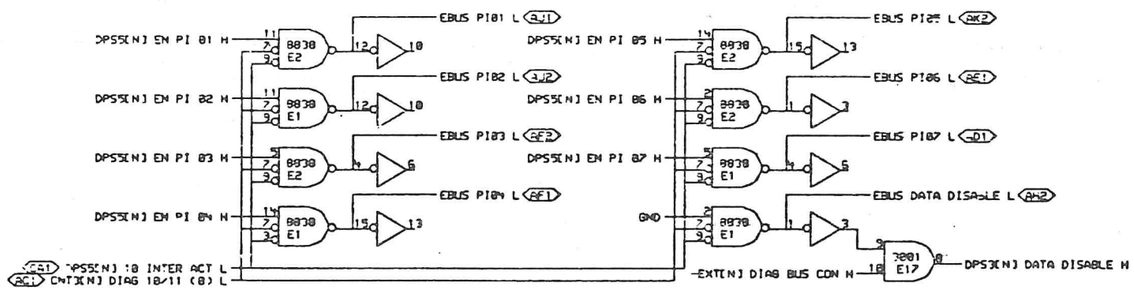

DTE SLOT LOCATIONS

TYPE	N=	SLOT
SINGLE	1	2AF0
MULTIPLE	1	2AF03
	2	2AF05
	3	2AF08
	4	2AF10

3A OF 8

"THIS DRAWING AND SPECIFICATIONS, HEREIN, ARE THE PROPERTY OF DIGITAL EQUIPMENT CORPORATION AND SHALL NOT BE REPRODUCED OR COPIED OR USED IN WHOLE OR IN PART AS THE BASIS FOR THE MANUFACTURE OR SALE OF ITEMS WITHOUT WRITTEN PERMISSION.
COPYRIGHT © 1977, DIGITAL EQUIPMENT CORPORATION"

REVISIONS		
CHG	CHANGE NO.	REV

DPS3A4.CRW(4,61) 18-FEB-77 12:59

FIRST USED ON OPTION/MODEL: DTE20

DRN. DATE 11-FEB-77 ENG. DATE 11-FEB-77

DATE 2/7/77 BOARD LOCATION: PAGE 2 OF 2

NEXT HIGHER ASSEMBLY: B-DD-M8552-0

TITLE: DATA PATH AND STATUS

SIZE	CODE	NUMBER	REV.
D	CS	M8552-0-DPS3	B

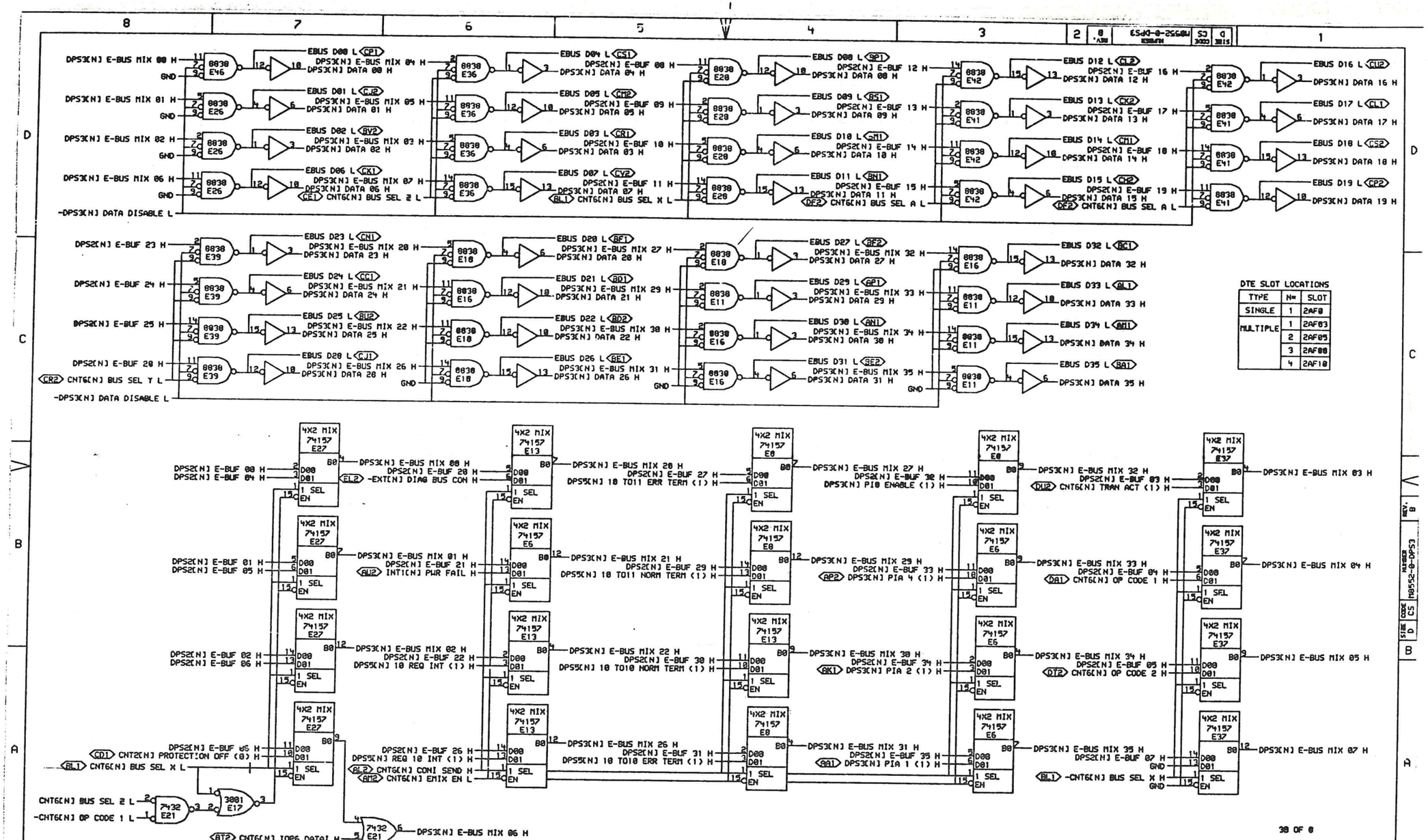

DTE SLOT LOCATIONS

TYPE	N=	SLOT
SINGLE	1	2AF0
MULTIPLE	1	2AF03
	2	2AF05
	3	2AF08
	4	2AF10

"THIS DRAWING AND SPECIFICATIONS, HEREIN, ARE THE PROPERTY OF DIGITAL EQUIPMENT CORPORATION AND SHALL NOT BE REPRODUCED OR COPIED OR USED IN WHOLE OR IN PART AS THE BASIS FOR THE MANUFACTURE OR SALE OF ITEMS WITHOUT WRITTEN PERMISSION.
COPYRIGHT © 1977, DIGITAL EQUIPMENT CORPORATION"

REVISIONS		
CHK	CHANGE NO.	REV

V9552-00005 B
D.H. Hubbell 9/9/77
W. BRUCKERT

digital

DRN: DATE 18-FEB-77
CHK: DATE 21-FEB-77
ENG: DATE 21-FEB-77
DPS3NS.CRL(4,613) 05-FEB-77 13:02
BOARD LOCATION: SHEET 2 OF 2
FIRST USED ON OPTION/MODEL: DTE20
NEXT HIGHER ASSEMBLY: B-DD-M8552-0

TITLE: DATA PATH AND STATUS

SIZE	CODE	NUMBER	REV.
D	CS	M8552-0-DPS3	B

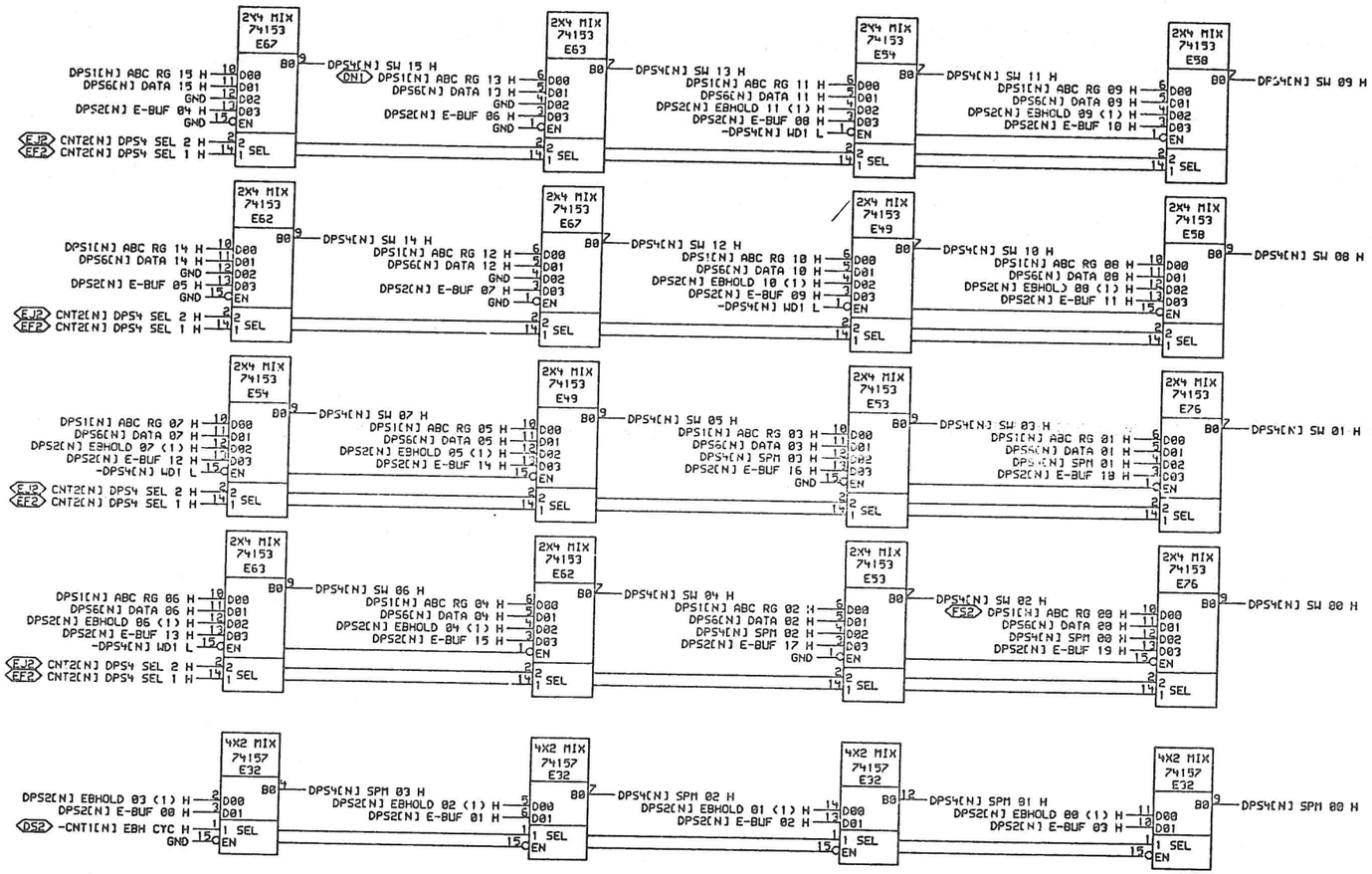

DTE SLOT LOCATIONS

TYPE	N=	SLOT
SINGLE	1	2AF0
MULTIPLE	1	2AF03
	2	2AF05
	3	2AF08
	4	2AF10

4A OF 8

*THIS DRAWING AND SPECIFICATIONS, HEREIN, ARE THE PROPERTY OF DIGITAL EQUIPMENT CORPORATION AND SHALL NOT BE REPRODUCED OR COPIED OR USED IN WHOLE OR IN PART AS THE BASIS FOR THE MANUFACTURE OR SALE OF ITEMS WITHOUT WRITTEN PERMISSION.
COPYRIGHT © 1977, DIGITAL EQUIPMENT CORPORATION*

REVISIONS		
CHK	CHANGE NO.	REV
	M8552-00005	B
	W. BRUCKERT	

digital

DRW. DPS4AR.DRW(4,613) 13-FEB-77 13:07
DATE 11-FEB-77 ENG. W. Bruckert DATE 23-FEB-77
CHK DATE BOARD LOCATION: SHEET 1 OF 2
FIRST USED ON OPTION/MODEL: DTE20 NEXT HIGHER ASSEMBLY: B-DD-M8552-0

TITLE: DATA PATH AND STATUS

SIZE	CODE	NUMBER	REV.
D	CS	M8552-0-DPS4	B

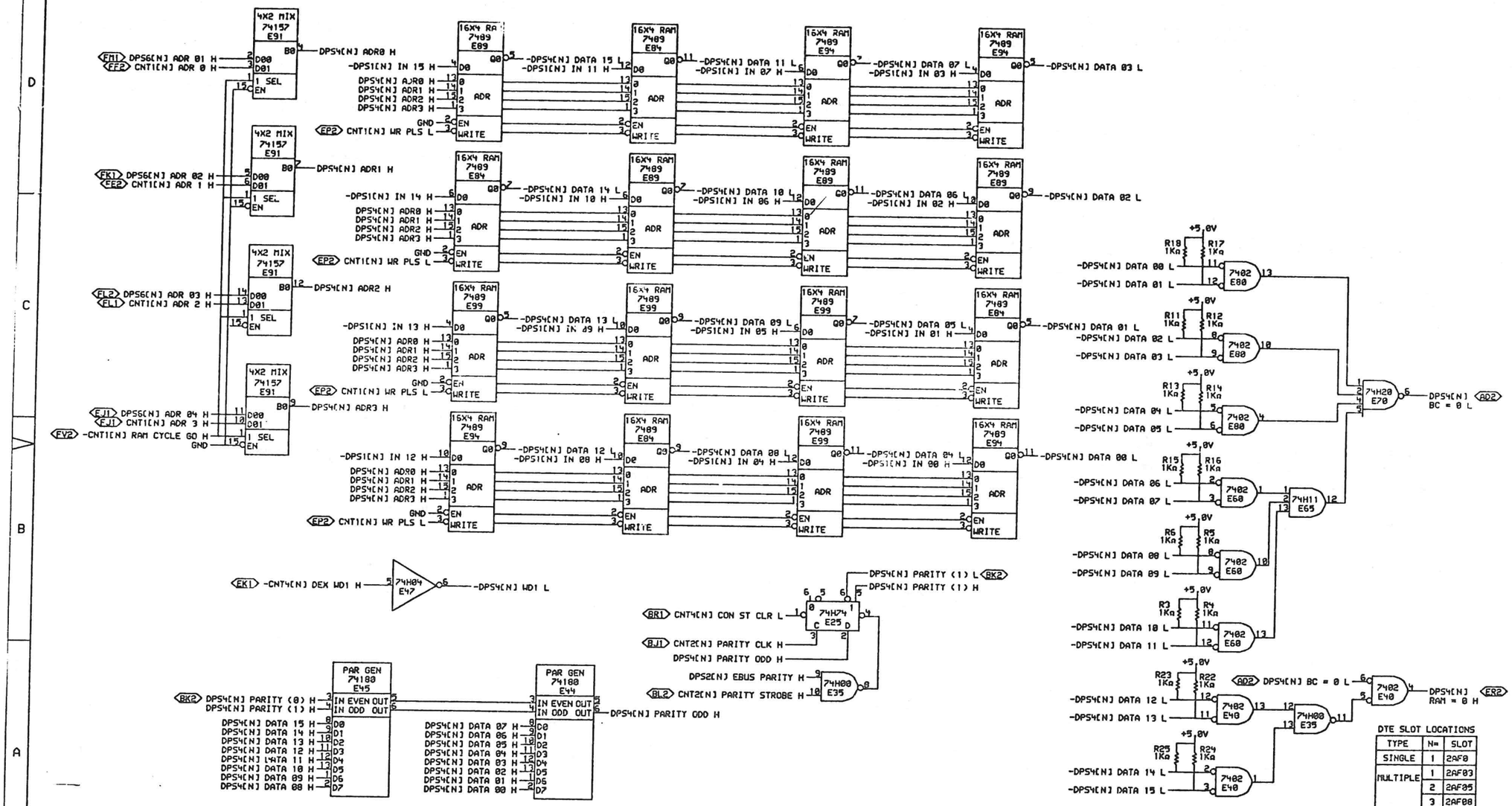

DTE SLOT LOCATIONS

TYPE	N=	SLOT
SINGLE	1	2AF0
MULTIPLE	1	2AF03
	2	2AF05
	3	2AF08
	4	2AF10

48 OF 8

"THIS DRAWING AND SPECIFICATIONS, HEREIN, ARE THE PROPERTY OF DIGITAL EQUIPMENT CORPORATION AND SHALL NOT BE REPRODUCED OR COPIED OR USED IN WHOLE OR IN PART AS THE BASIS FOR THE MANUFACTURE OR SALE OF ITEMS WITHOUT WRITTEN PERMISSION. COPYRIGHT © 1977, DIGITAL EQUIPMENT CORPORATION"

REVISIONS		
CHK	CHANGE NO.	REV
	M8552-00005	B

digital

DPS4AS.DRW[4,613] 09-FEB-77 13:03

FIRST USED ON OPTION/MODEL: DTE20

DRW. DATE 11-FEB-77 ENG. DATE 2/16/77 CHK DATE 2/11/77 BOARD LOCATION: SHEET 2 OF 2

NEXT HIGHER ASSEMBLY: B-DD-M8552-0

TITLE: DATA PATH AND STATUS

SIZE	CODE	NUMBER	REV.
D	CS	M8552-0-DPS4	B

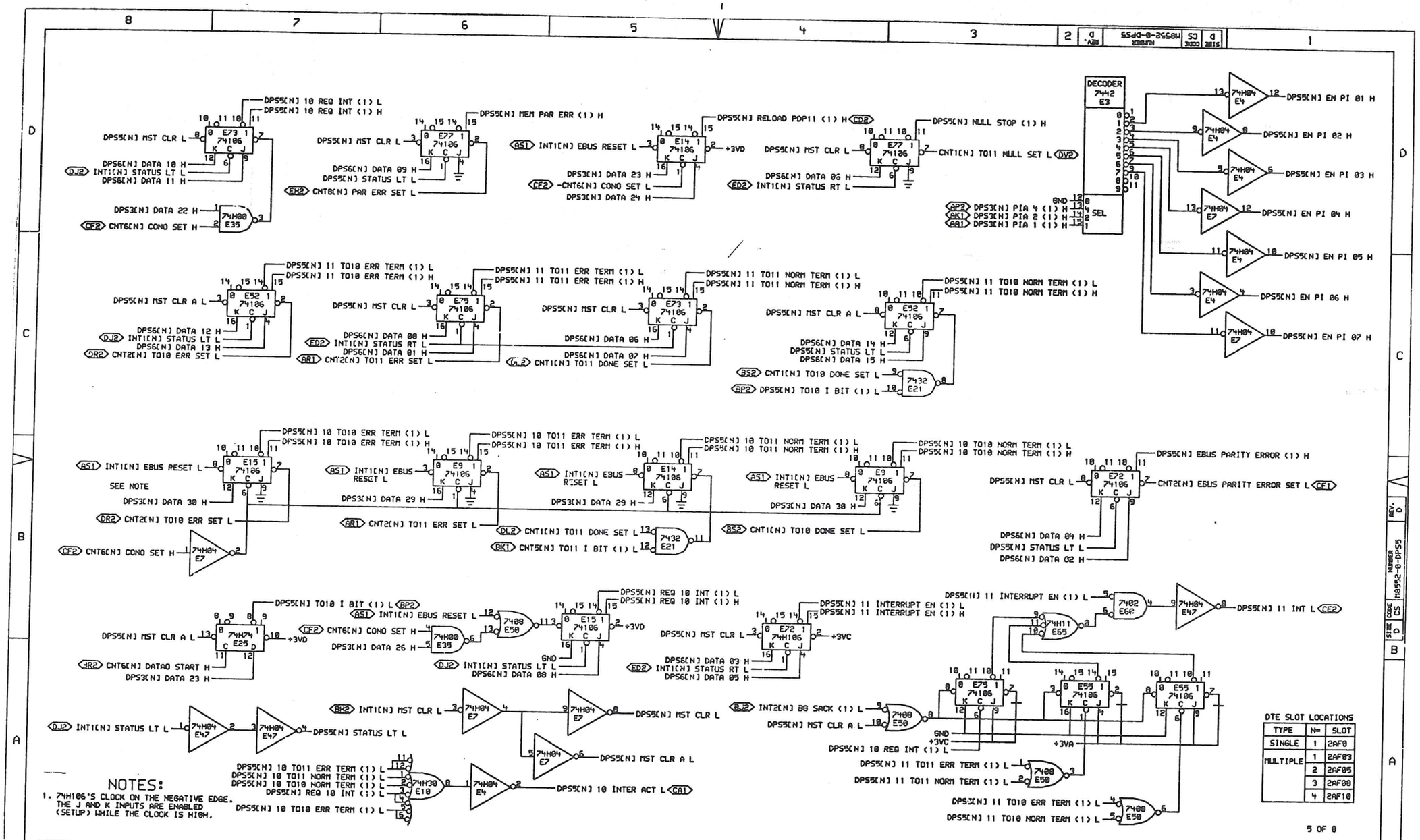

NOTES:

1. 74H106'S CLOCK ON THE NEGATIVE EDGE. THE J AND K INPUTS ARE ENABLED (SETUP) WHILE THE CLOCK IS HIGH.

DTE SLOT LOCATIONS

TYPE	N=	SLOT
SINGLE	1	2AF0
MULTIPLE	1	2AF03
	2	2AF05
	3	2AF08
	4	2AF10

5 OF 8

"THIS DRAWING AND SPECIFICATIONS, HEREIN, ARE THE PROPERTY OF DIGITAL EQUIPMENT CORPORATION AND SHALL NOT BE REPRODUCED OR COPIED OR USED IN WHOLE OR IN PART AS THE BASIS FOR THE MANUFACTURE OR SALE OF ITEMS WITHOUT WRITTEN PERMISSION. COPYRIGHT © 1977, DIGITAL EQUIPMENT CORPORATION"

REVISIONS		
CHK	CHANGE NO.	REV
	M8552-00005	D

W. BRUCKERT

DSGN: L. Loomis DATE 18-FEB-77 ENG. W. Bruckert DATE APR077
CHK: D. Anderson DATE 2/11/77 PCB LOCATION: SHEET 1 OF 1
DPS5RS.DRW(4,613) 09-FEB-77 13:04 NEXT HIGHER ASSEMBLY: B-DD-M8552-0
FIRST USED ON OPTION/MODEL: DTE20

TITLE: DATA PATH AND STATUS

SIZE	CODE	NUMBER	REV.
D	CS	M8552-0-DPS5	D

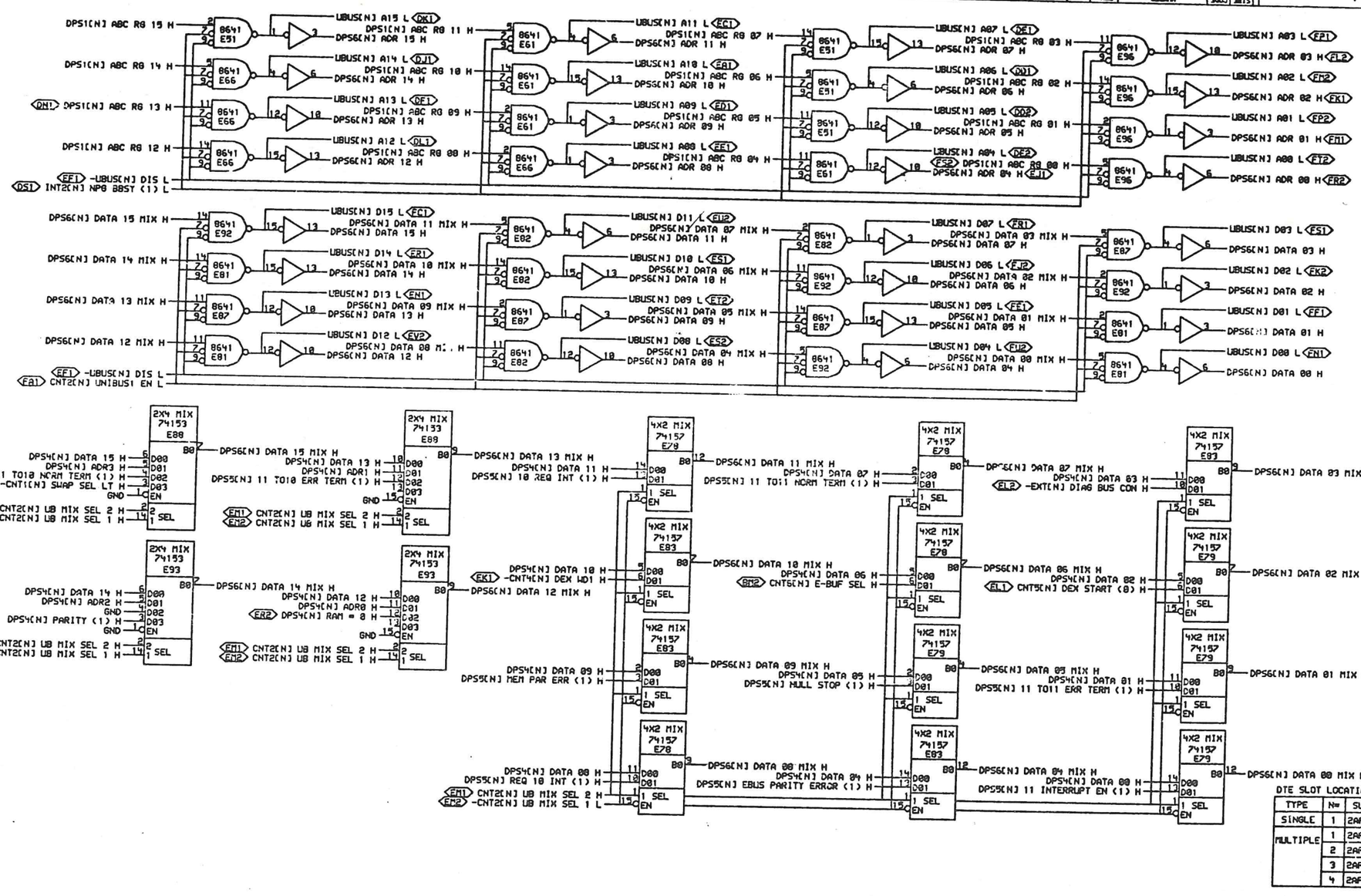

DTE SLOT LOCATIONS

TYPE	N=	SLOT
SINGLE	1	2AF0
MULTIPLE	1	2AF03
	2	2AF05
	3	2AF08
	4	2AF10

6 OF 8

"THIS DRAWING AND SPECIFICATIONS, HEREIN, ARE THE PROPERTY OF DIGITAL EQUIPMENT CORPORATION AND SHALL NOT BE REPRODUCED OR COPIED OR USED IN WHOLE OR IN PART AS THE BASIS FOR THE MANUFACTURE OR SALE OF ITEMS WITHOUT WRITTEN PERMISSION. COPYRIGHT © 1977, DIGITAL EQUIPMENT CORPORATION"

REVISIONS		
SYM	CHANGE NO.	REV

M8552-00005 B
W. BRUCKERT
9/1/77

digital

DPS6RS.DWG4,6133 09-FEB-77 13:03

DATE 18-FEB-77 ENG. M. Bucket DATE 22-FEB-77
DATE CHECKED BY DATE BOARD LOCATION: SHEET OF

FIRST USED ON OPTION/MODEL: DTE20
NEXT HIGHER ASSEMBLY: B-DD-M8552-0

TITLE: DATA PATH AND STATUS

SIZE	CODE	NUMBER	REV.
D	CS	M8552-0-DPS6	B

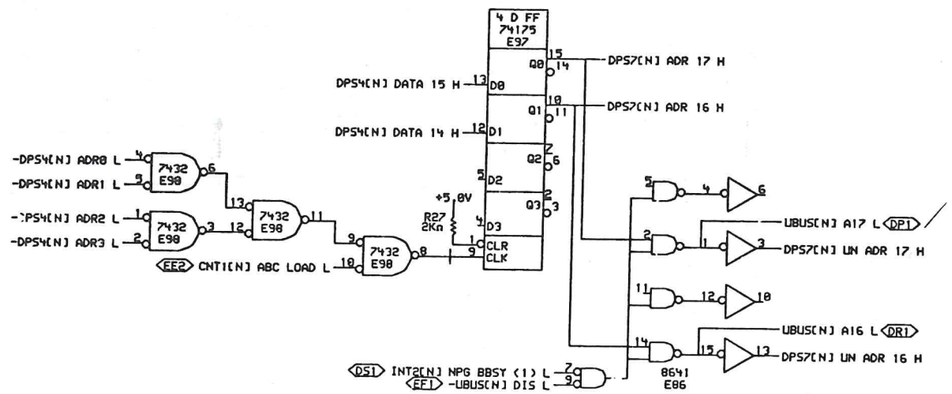

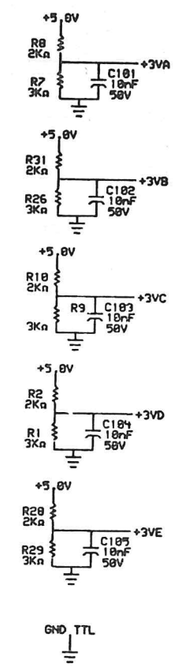

DTE SLOT LOCATIONS

TYPE	N=	SLOT
SINGLE	1	2AF0
MULTIPLE	1	2AF03
	2	2AF05
	3	2AF08
	4	2AF10

7 OF 8

"THIS DRAWING AND SPECIFICATIONS, HEREIN, ARE THE PROPERTY OF DIGITAL EQUIPMENT CORPORATION AND SHALL NOT BE REPRODUCED OR COPIED OR USED IN WHOLE OR IN PART AS THE BASIS FOR THE MANUFACTURE OR SALE OF ITEMS WITHOUT WRITTEN PERMISSION. COPYRIGHT © 1977, DIGITAL EQUIPMENT CORPORATION"

REVISIONS			
CHK	CHANGE NO.	REV	M8552-00005 D
			4/77 W. BRUCKERT 12-19-77

DRN. DATE 11-FEB-77 ENG. DATE 15 FEB 77
CHK ID DATE BOARD LOCATION: SHEET 1 OF 1
DPS7RS.DRW[4,613] 09-FEB-77 13:06 NEXT HIGHER ASSEMBLY: B-DD-M9552-0
FIRST USED ON OPTION/MODEL: DTE20

TITLE: DATA PATH AND STATUS

SIZE	CODE	NUMBER	REV.
D	CS	M3552-0-DPS7	D

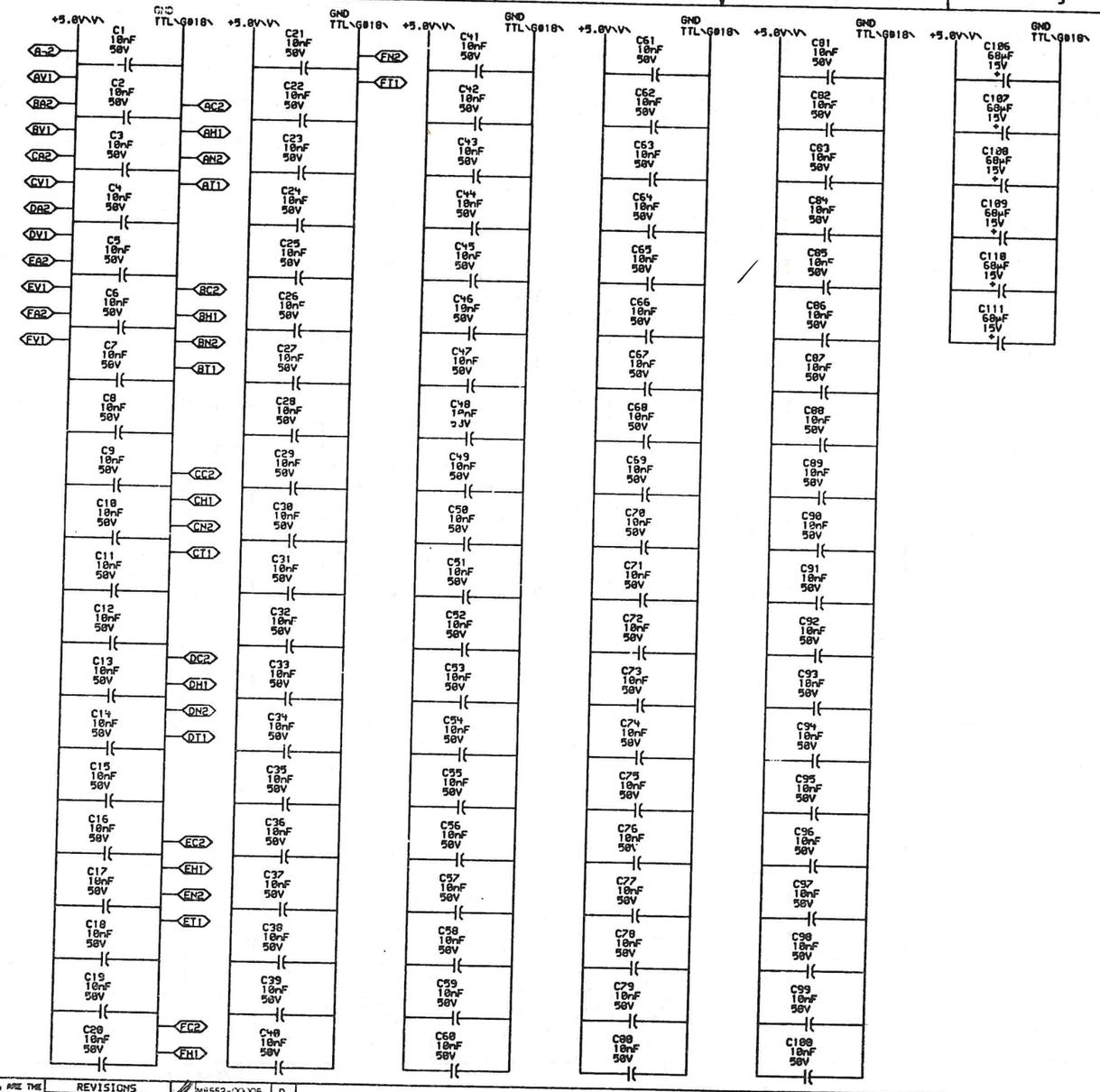

"THIS DRAWING AND SPECIFICATIONS, HEREIN, ARE THE PROPERTY OF DIGITAL EQUIPMENT CORPORATION AND SHALL NOT BE REPRODUCED OR COPIED OR USED IN WHOLE OR IN PART AS THE BASIS FOR THE MANUFACTURE OR SALE OF ITEMS WITHOUT WRITTEN PERMISSION.
COPYRIGHT © 1977, DIGITAL EQUIPMENT CORPORATION"

REVISIONS		
CHK	CHANGE NO.	REV

M8552-00X05 D
W. BRUCKERT
12-APR-77

DRN. J. Lindley
CHK. D. Hall
DATE 11-FEB-77
ENG. W. Bruckert
DATE 23FEB77
DATE 21-FEB-77
BOARD LOCATION:
SHEET 1 OF 1
DPS8RS.DRW;4,613) 18-FEB-77 10:35
NEXT HIGHER ASSEMBLY: B-DD-M8552-0
FIRST USED ON OPTION/MODEL: DTE20

TITLE: DATA PATH & STATUS PWR, CAP & GND

SIZE	CODE	NUMBER	REV.
D	CS	M8552-0-DPS8	D

REVISION CONTROL SHEET

CUSTOMER PRINT SET	MFG SET	DRAWING NO	NO OF SHT	DESCRIPTION	OPTION NO/FILE DATE	REVISIONS										
			-	MODULE REVISION		A	B	C	D	E	F	H	J	J		J
		D-UA-M8553-Ø-Ø	7	1Ø/11 BUS AND DATA CONTROL		A	A	B	C	D	E	F	H	HI		HI
		D-CS-M8553-Ø-CNT1	1	DTE20 CONTROL LOGIC		-	-	A	B	B	B	B	B	BI		BI
		D-CS-M8553-Ø-CNT2	1	DTE20 CONTROL LOGIC		-	-	A	B	B	B	B	C	CI		CI
		D-CS-M8553-Ø-CNT3	1	DTE20 CONTROL LOGIC		-	-	A	A	A	A	A	A	AI		AI
		D-CS-M8553-Ø-CNT4	1	DTE20 CONTROL LOGIC		-	-	A	B	B	B	C	D	DI		DI
		D-CS-M8553-Ø-CNT5	1	DTE20 CONTROL LOGIC		-	-	A	A	A	B	B	B	BI		BI
		D-CS-M8553-Ø-CNT6	1	DTE20 CONTROL LOGIC		-	-	A	B	B	B	B	B	BI		BI
		D-CS-M8553-Ø-CNT7	1	DTE20 CONTROL LOGIC		-	-	A	A	A	A	A	A	AI		AI
		D-CS-M8553-Ø-CNT8	1	DTE20 CONTROL LOGIC		-	-	A	B	B	C	C	C	CI		CI
		D-CS-M8553-Ø-CNT9	1	DTE20 CONTROL LOGIC		-	-	A	A	A	A	A	A	AI		AI
				PWR, CAP, AND GND												
		K-CO-M8553-Ø-4	1	1Ø/11 BUS AND DATA CONTROL		D	D	D	D	D	D	D	D	D		D
		D-AH-M8553-Ø-5	4	1Ø/11 BUS AND DATA CONTROL		C	C	C	C	C	C	C	C	C		C
		B-MH-M8553-Ø-6	1	MODULE ECO HISTORY		-	A	B	C	D	E	F	H	J		J
		5010514	-	ETCH CIRCUIT BOARD		D	D	D	D	D	D	D	D	D		D
		PØØ-M8553-ØØ		PROCESS SHEET (REF ONLY)		-	-	-	-	-	-	-	-	-		-
														REWORK VERSION	RELAYOUT VERSION SEE SHEET 3	
					ECO NO	OP1C	00001	00002	00003	00004	00005	00006	00007	00008		MRØ1Ø

CUSTOMER PRINT SET CODES
X = PRINT OF DOCUMENT INCLUDED IN PRINT SET
C = INCLUDES ALL PRINTS INDICATED ON DOCUMENT
S = CONFIDENTIAL AUTHORIZED SIGNATURE REQUIRED

TITLE		SIZE	CODE	NUMBER	REF
1Ø/11 BUS AND DATA CONTROL	SHEET 2 OF 3	B	DD	M8553-Ø	L

MR

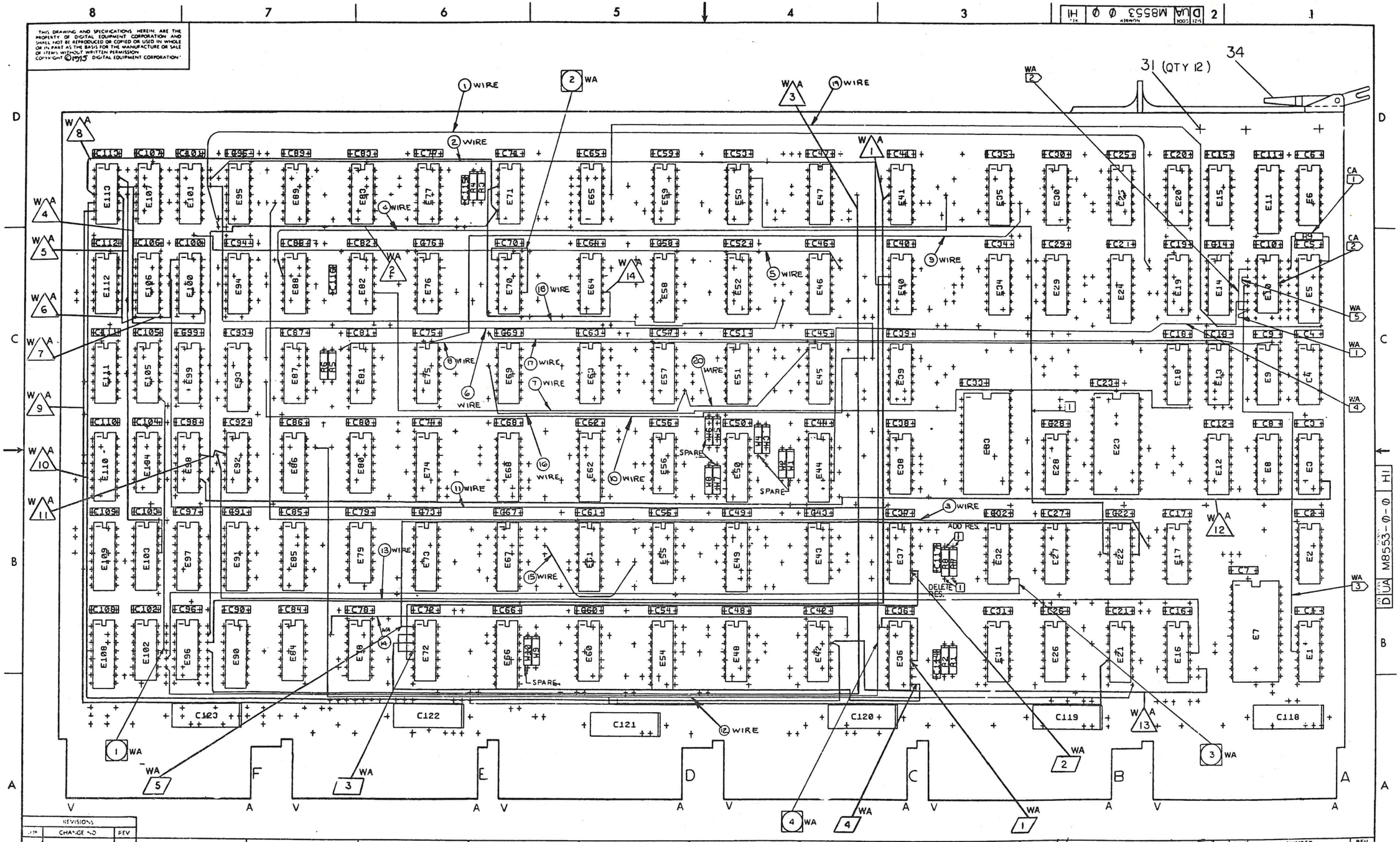
THIS DRAWING AND SPECIFICATIONS, HEREIN, ARE THE PROPERTY OF DIGITAL EQUIPMENT CORPORATION AND SHALL NOT BE REPRODUCED OR COPIED OR USED IN WHOLE OR IN PART AS THE BASIS FOR THE MANUFACTURE OR SALE OF ITEMS WITHOUT WRITTEN PERMISSION.
COPYRIGHT © 1975 DIGITAL EQUIPMENT CORPORATION
31 (QTY 12)
34
ADD RES.
DELETE RES.
SPARE
REVISIONS
CHANGE NO
REV
TITLE 10/11 BUS AND DATA CONTROL
SIZE D
CODE UA
NUMBER M8553-0-0
REV. H1
SCALE
SHEET 3 OF 7
DIST

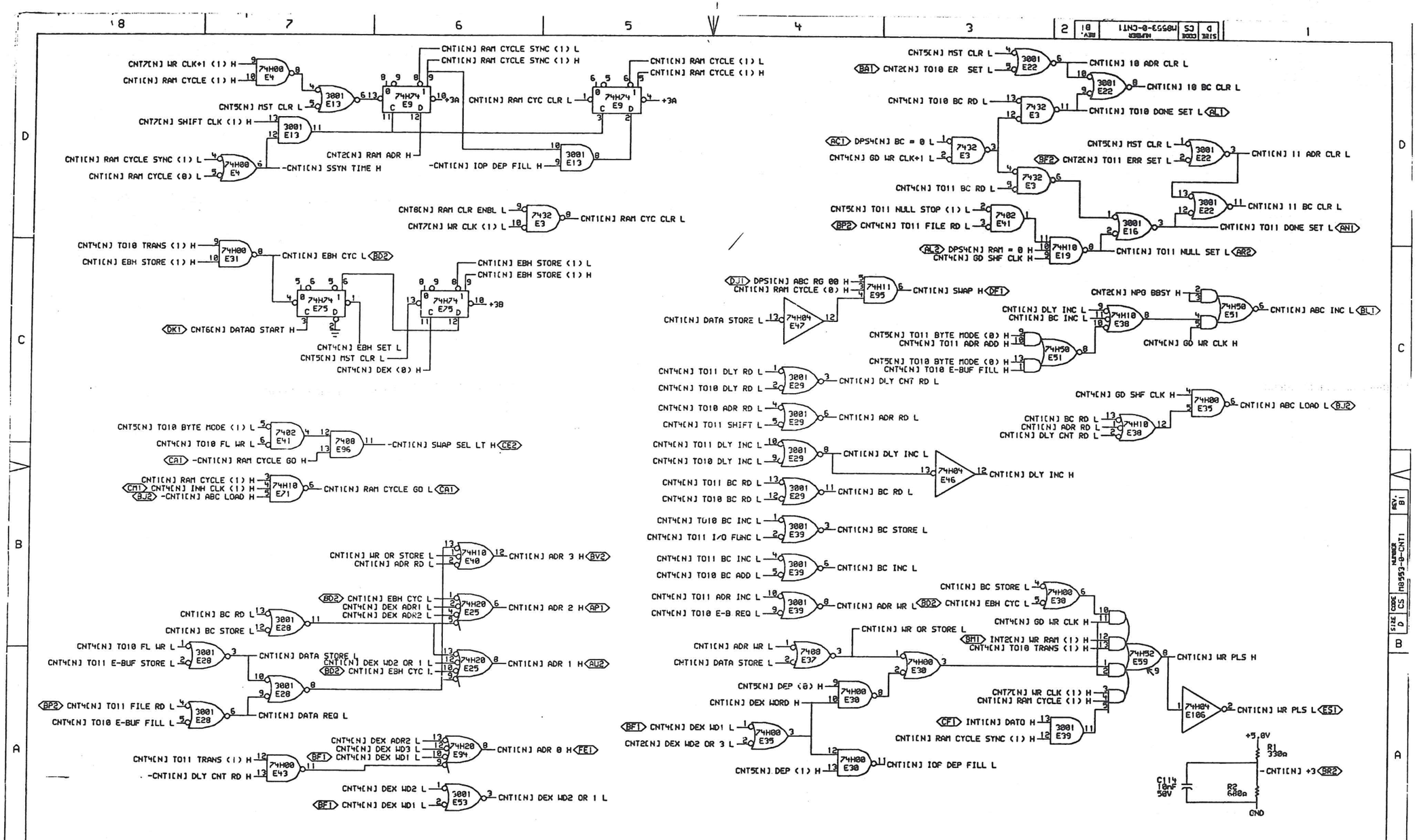

11 OF 9

"THIS DRAWING AND SPECIFICATIONS, HEREIN, ARE THE PROPERTY OF DIGITAL EQUIPMENT CORPORATION AND SHALL NOT BE REPRODUCED OR COPIED OR USED IN WHOLE OR IN PART AS THE BASIS FOR THE MANUFACTURE OR SALE OF ITEMS WITHOUT WRITTEN PERMISSION. COPYRIGHT © 1973, DIGITAL EQUIPMENT CORPORATION"

REVISIONS		
CHK	CHANGE NO.	REV

M8553-00003 | B — B.BRUCKERT
M8553-00003 | B1 — B. BRUCKERT

digital

DRN. D. Foorsky — DATE 02-DEC-73
CHK'D. D. Stephenson — DATE 12/3/73
ENG. D. Bruckert — DATE 12/4/73
BOARD LOCATION:
SHEET 1 OF

CNT1X.DRW(4,426) 03-DEC-73 14:08
FIRST USED ON OPTION/MODEL: KL10
NEXT HIGHER ASSEMBLY: B-DD-M8553-0

TITLE: DTE20 CONTROL LOGIC

SIZE	CODE	NUMBER	REV.
D	CS	M8553-0-CNT1	B1

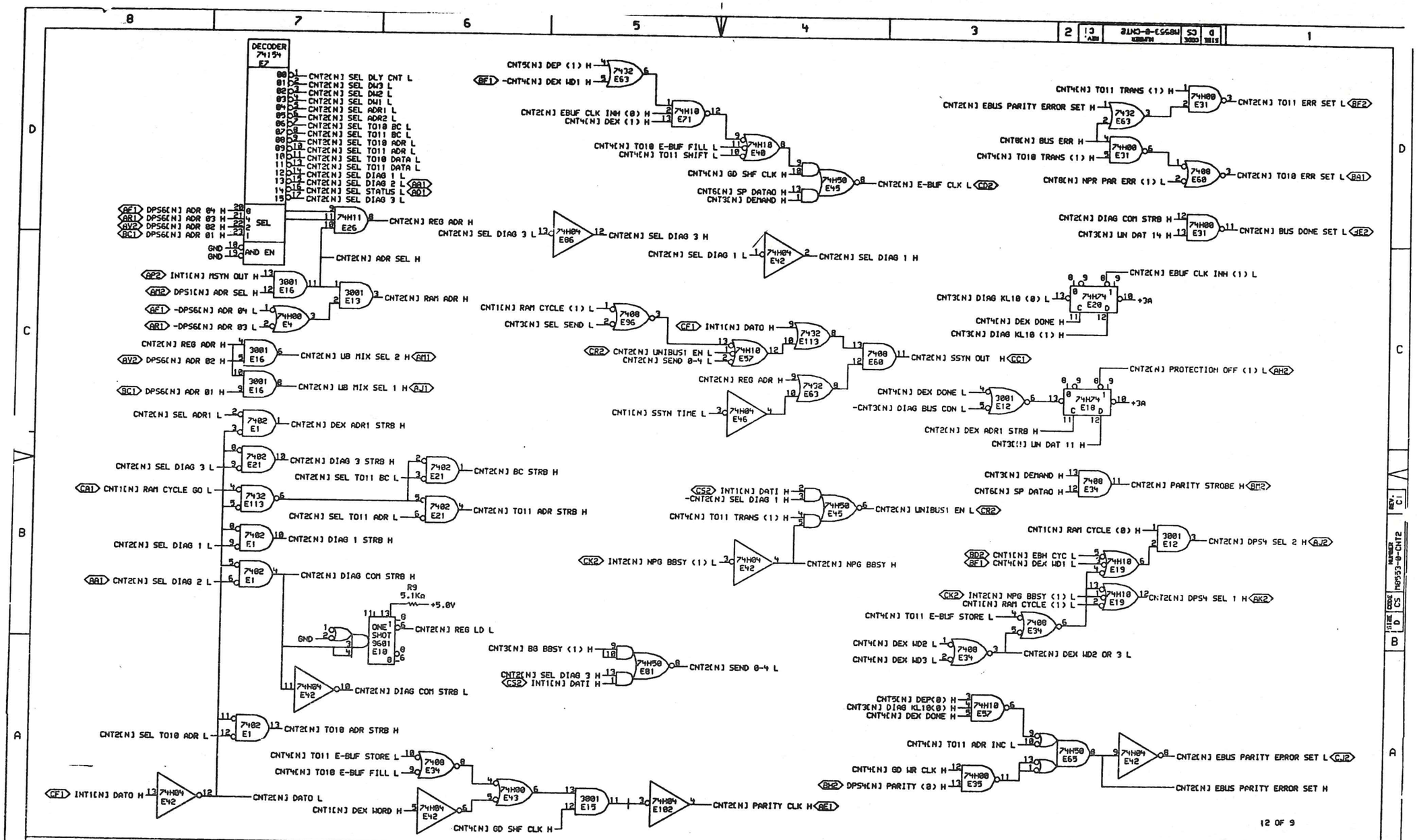

"THIS DRAWING AND SPECIFICATIONS, HEREIN, ARE THE PROPERTY OF DIGITAL EQUIPMENT CORPORATION AND SHALL NOT BE REPRODUCED OR COPIED OR USED IN WHOLE OR IN PART AS THE BASIS FOR THE MANUFACTURE OR SALE OF ITEMS WITHOUT WRITTEN PERMISSION. COPYRIGHT © 1976, DIGITAL EQUIPMENT CORPORATION"

REVISIONS			REVISIONS		
CHK	CHANGE NO.	REV	CHK	CHANGE NO.	REV
	M8553-00007	C		M8553-00008	C1

DRN. D. Loomis DATE 14-DEC-76 ENG. D. Bruckert DATE 7 FEB 76 CHK'D. DATE SCHED LOCATION: SHEET 1 OF 1
CNT2(,2R4,4,4,26) 14-DEC-76 12:45 NEXT HIGHER ASSEMBLY: B-DD-M8553-0
FIRST USED ON OPTION/MODEL: KL10

TITLE: DTE20 CONTROL LOGIC

SIZE	CODE	NUMBER	REV.
D	CS	M8553-0-CNT2	C1

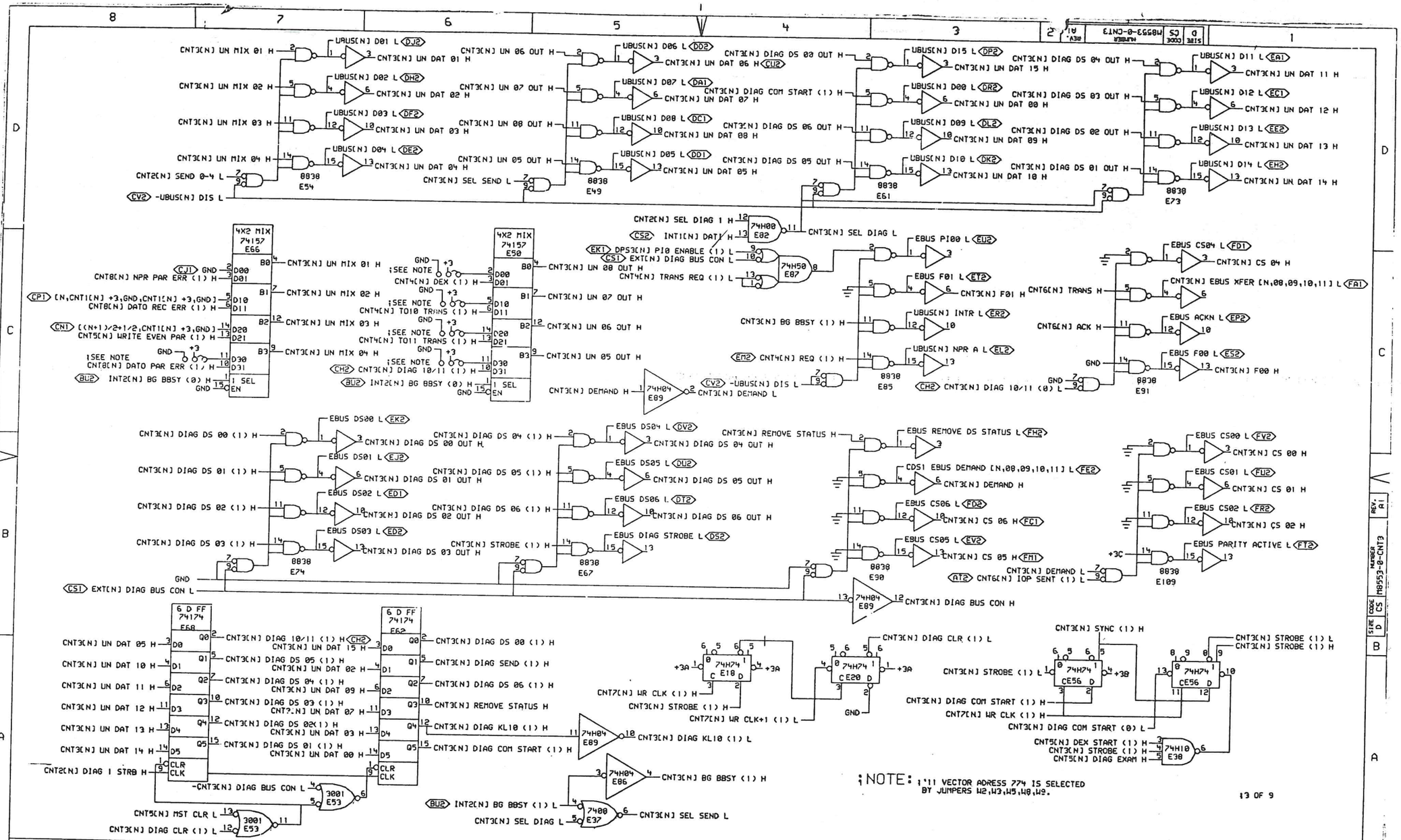
CNT3[N] UN MIX 01 H
CNT3[N] UN MIX 02 H
CNT3[N] UN MIX 03 H
CNT3[N] UN MIX 04 H
CNT2[N] SEND 0-4 L
-UBUS[N] DIS L
UBUS[N] D01 L
UBUS[N] D02 L
UBUS[N] D03 L
UBUS[N] D04 L
CNT3[N] UN DAT 01 H
CNT3[N] UN DAT 02 H
CNT3[N] UN DAT 03 H
CNT3[N] UN DAT 04 H
8838 E54
CNT3[N] UN 06 OUT H
CNT3[N] UN 07 OUT H
CNT3[N] UN 08 OUT H
CNT3[N] UN 05 OUT H
CNT3[N] SEL SEND L
UBUS[N] D06 L
UBUS[N] D07 L
UBUS[N] D08 L
UBUS[N] D05 L
CNT3[N] UN DAT 06 H
CNT3[N] UN DAT 07 H
CNT3[N] UN DAT 08 H
CNT3[N] UN DAT 05 H
8838 E49
CNT3[N] DIAG DS 00 OUT H
CNT3[N] DIAG COM START (1) H
CNT3[N] DIAG DS 06 OUT H
CNT3[N] DIAG DS 05 OUT H
UBUS[N] D15 L
UBUS[N] D00 L
UBUS[N] D09 L
UBUS[N] D10 L
CNT3[N] UN DAT 15 H
CNT3[N] UN DAT 00 H
CNT3[N] UN DAT 09 H
CNT3[N] UN DAT 10 H
8838 E61
CNT3[N] DIAG DS 04 OUT H
CNT3[N] DIAG DS 03 OUT H
CNT3[N] DIAG DS 02 OUT H
CNT3[N] DIAG DS 01 OUT H
UBUS[N] D11 L
UBUS[N] D12 L
UBUS[N] D13 L
UBUS[N] D14 L
CNT3[N] UN DAT 11 H
CNT3[N] UN DAT 12 H
CNT3[N] UN DAT 13 H
CNT3[N] UN DAT 14 H
8838 E73
4X2 MIX 74157 E66
4X2 MIX 74157 E50
CNT8[N] NPR PAR ERR (1) H
CNT8[N] DATO REC ERR (1) H
CNT5[N] WRITE EVEN PAR (1) H
CNT8[N] DATO PAR ERR (1) H
INT2[N] BG BBSY (0) H
CNT3[N] UN MIX 01 H
CNT3[N] UN MIX 02 H
CNT3[N] UN MIX 03 H
CNT3[N] UN MIX 04 H
CNT4[N] DEX (1) H
CNT4[N] TO10 TRANS (1) H
CNT4[N] TO11 TRANS (1) H
CNT3[N] DIAG 10/11 (1) H
INT2[N] BG BBSY (0) H
CNT3[N] UN 00 OUT H
CNT3[N] UN 07 OUT H
CNT3[N] UN 06 OUT H
CNT3[N] UN 05 OUT H
CNT3[N] DEMAND H
74H04 E89
CNT3[N] DEMAND L
CNT2[N] SEL DIAG 1 H
INT1[N] DATI H
74H00 E02
CNT3[N] SEL DIAG L
DPS3[N] PI0 ENABLE (1) L
EXT[N] DIAG BUS CON L
CNT4[N] TRANS REQ (1) L
74H50 E07
EBUS PI00 L
EBUS F01 L
CNT3[N] F01 H
CNT3[N] BG BBSY (1) H
UBUS[N] INTR L
UBUS[N] NPR A L
CNT4[N] REQ (1) H
-UBUS[N] DIS L
CNT3[N] DEMAND L
8838 E85
CNT3[N] DIAG 10/11 (0) L
EBUS CS04 L
CNT3[N] CS 04 H
CNT3[N] EBUS XFER [N,08,09,10,11] L
EBUS ACKN L
EBUS F00 L
CNT3[N] F00 H
CNT6[N] TRANS H
CNT6[N] ACK H
8838 E91
EBUS DS00 L
EBUS DS01 L
EBUS DS02 L
EBUS DS03 L
CNT3[N] DIAG DS 00 (1) H
CNT3[N] DIAG DS 01 (1) H
CNT3[N] DIAG DS 02 (1) H
CNT3[N] DIAG DS 03 (1) H
CNT3[N] DIAG DS 00 OUT H
CNT3[N] DIAG DS 01 OUT H
CNT3[N] DIAG DS 02 OUT H
CNT3[N] DIAG DS 03 OUT H
8838 E74
EBUS DS04 L
EBUS DS05 L
EBUS DS06 L
EBUS DIAG STROBE L
CNT3[N] DIAG DS 04 (1) H
CNT3[N] DIAG DS 05 (1) H
CNT3[N] DIAG DS 06 (1) H
CNT3[N] STROBE (1) H
CNT3[N] DIAG DS 04 OUT H
CNT3[N] DIAG DS 05 OUT H
CNT3[N] DIAG DS 06 OUT H
8838 E67
CNT3[N] REMOVE STATUS H
EBUS REMOVE DS STATUS L
CDS1 EBUS DEMAND [N,08,09,10,11] L
CNT3[N] DEMAND H
EBUS CS06 L
CNT3[N] CS 06 H
EBUS CS05 L
CNT3[N] CS 05 H
8838 E90
CNT3[N] DEMAND L
CNT6[N] IOP SENT (1) L
74H04 E89
CNT3[N] DIAG BUS CON H
EXT[N] DIAG BUS CON L
EBUS CS00 L
EBUS CS01 L
EBUS CS02 L
EBUS PARITY ACTIVE L
CNT3[N] CS 00 H
CNT3[N] CS 01 H
CNT3[N] CS 02 H
8838 E109
6 D FF 74174 E68
6 D FF 74174 E62
CNT3[N] UN DAT 05 H
CNT3[N] UN DAT 10 H
CNT3[N] UN DAT 11 H
CNT3[N] UN DAT 12 H
CNT3[N] UN DAT 13 H
CNT3[N] UN DAT 14 H
CNT2[N] DIAG 1 STRB H
CNT3[N] DIAG 10/11 (1) H
CNT3[N] UN DAT 15 H
CNT3[N] DIAG DS 05 (1) H
CNT3[N] UN DAT 02 H
CNT3[N] DIAG DS 04 (1) H
CNT3[N] UN DAT 09 H
CNT3[N] DIAG DS 03 (1) H
CNT3[N] UN DAT 07 H
CNT3[N] DIAG DS 02 (1) H
CNT3[N] UN DAT 03 H
CNT3[N] DIAG DS 01 (1) H
CNT3[N] UN DAT 00 H
CNT3[N] DIAG DS 00 (1) H
CNT3[N] DIAG SEND (1) H
CNT3[N] DIAG DS 06 (1) H
CNT3[N] REMOVE STATUS H
CNT3[N] DIAG KL10 (1) H
CNT3[N] DIAG COM START (1) H
-CNT3[N] DIAG BUS CON L
3001 E53
CNT5[N] MST CLR L
CNT3[N] DIAG CLR (1) L
74H04 E89
CNT3[N] DIAG KL10 (1) L
74H04 E86
CNT3[N] BG BBSY (1) H
INT2[N] BG BBSY (1) L
CNT3[N] SEL DIAG L
7400 E37
CNT3[N] SEL SEND L
74H74 E18
74H74 E20
CNT7[N] WR CLK (1) H
CNT3[N] STROBE (1) H
CNT7[N] WR CLK+1 (1) L
CNT3[N] DIAG CLR (1) L
CNT3[N] SYNC (1) H
74H74 E56
CNT3[N] STROBE (1) L
CNT3[N] DIAG COM START (1) H
CNT7[N] WR CLK (1) H
CNT3[N] DIAG COM START (0) L
CNT5[N] DEX START (1) H
CNT3[N] STROBE (1) H
CNT5[N] DIAG EXAM H
74H10 E38
NOTE: 1'11 VECTOR ADRESS 774 IS SELECTED BY JUMPERS W2,W3,W5,W8,W9.
13 OF 9
"THIS DRAWING AND SPECIFICATIONS, HEREIN, ARE THE PROPERTY OF DIGITAL EQUIPMENT CORPORATION AND SHALL NOT BE REPRODUCED OR COPIED OR USED IN WHOLE OR IN PART AS THE BASIS FOR THE MANUFACTURE OR SALE OF ITEMS WITHOUT WRITTEN PERMISSION. COPYRIGHT © 1975, DIGITAL EQUIPMENT CORPORATION"
REVISIONS
CHK CHANGE NO. REV
M8553-00002 A
W. BRUCKERT
REVISIONS
CHK CHANGE NO. REV
M8553-00002 A1
W. BRUCKERT
digital
DRN. Foomby
CHK'D
DATE 5/23/75
ENG. W. Bruckert
DATE 6/6/75
DATE
BOARD LOCATION:
SHEET 1 OF 1
CNT3X(4,426) 20-MAY-75 15:25
NEXT HIGHER ASSEMBLY: B-DD-M8553-0
FIRST USED ON OPTION/MODEL: KL10
TITLE: DTE20 CONTROL LOGIC
SIZE D
CODE CS
NUMBER M8553-0-CNT3
REV. A1

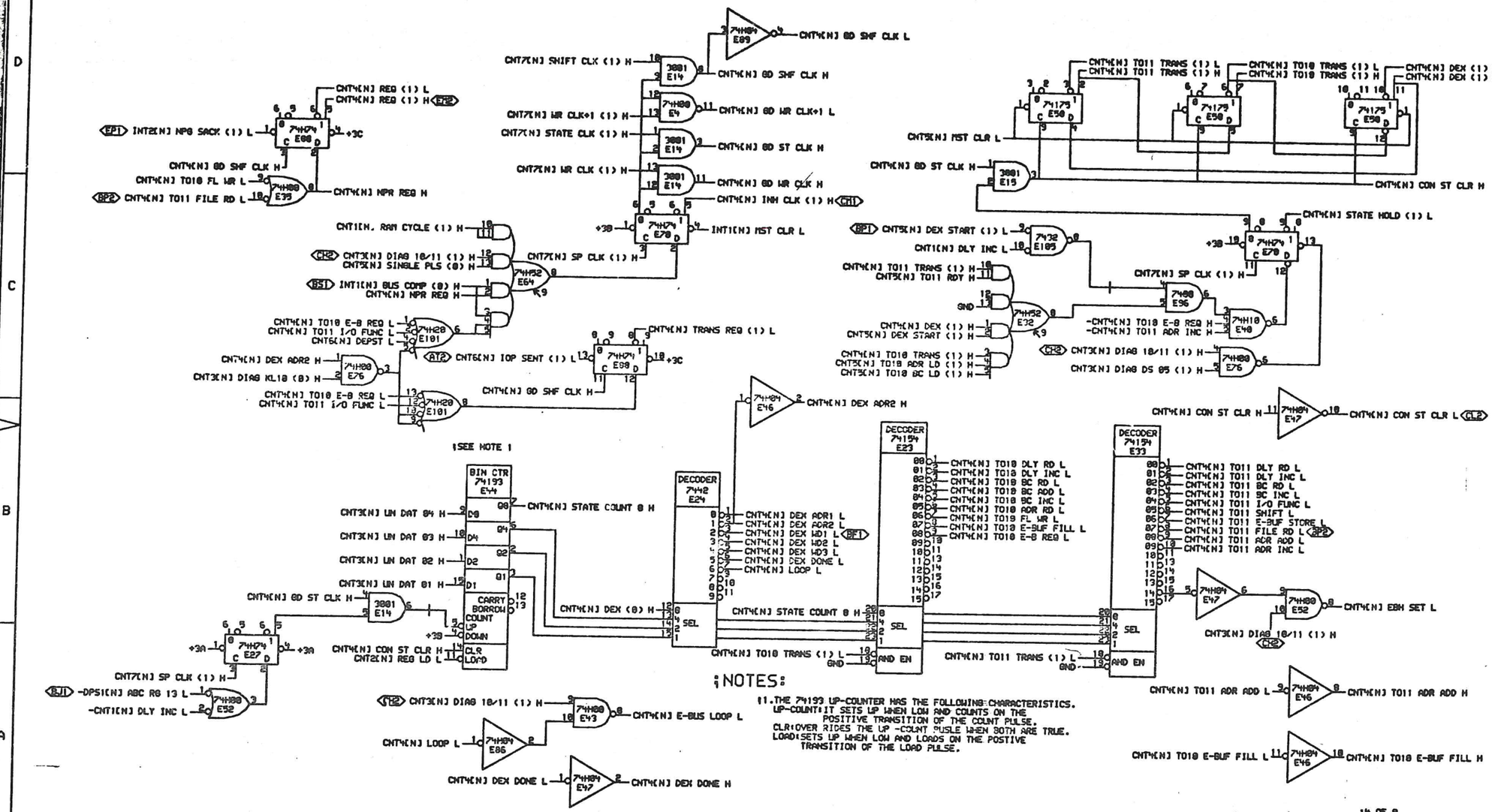
CNT4[N] REQ (1) L
CNT4[N] REQ (1) H
EP1 INT2[N] NPG SACK (1) L
CNT4[N] GD SHF CLK H
CNT4[N] TO10 FL WR L
BP2 CNT4[N] TO11 FILE RD L
CNT4[N] NPR REQ H
CNT7[N] SHIFT CLK (1) H
CNT4[N] GD SHF CLK L
CNT4[N] GD SHF CLK H
CNT7[N] WR CLK+1 (1) H
CNT4[N] GD WR CLK+1 L
CNT7[N] STATE CLK (1) H
CNT4[N] GD ST CLK H
CNT7[N] WR CLK (1) H
CNT4[N] GD WR CLK H
CNT4[N] INH CLK (1) H
INT1[N] MST CLR L
CNT1[N] RAM CYCLE (1) H
CNT3[N] DIAG 10/11 (1) H
CNT5[N] SINGLE PLS (0) H
BS1 INT1[N] BUS COMP (0) H
CNT4[N] NPR REQ H
CNT7[N] SP CLK (1) H
CNT4[N] TO10 E-B REQ L
CNT4[N] TO11 I/O FUNC L
CNT6[N] DEPST L
CNT4[N] DEX ADR2 H
CNT3[N] DIAG KL10 (0) H
AT2 CNT6[N] IOP SENT (1) L
CNT4[N] TRANS REQ (1) L
CNT4[N] GD SHF CLK H
CNT4[N] TO10 E-B REQ L
CNT4[N] TO11 I/O FUNC L
(SEE NOTE 1)
CNT4[N] TO11 TRANS (1) L
CNT4[N] TO11 TRANS (1) H
CNT4[N] TO10 TRANS (1) L
CNT4[N] TO10 TRANS (1) H
CNT4[N] DEX (1) L
CNT4[N] DEX (1) H
CNT5[N] MST CLR L
CNT4[N] GD ST CLK H
CNT4[N] CON ST CLR H
CNT4[N] STATE HOLD (1) L
BP1 CNT5[N] DEX START (1) L
CNT1[N] DLY INC L
CNT4[N] TO11 TRANS (1) H
CNT5[N] TO11 RDY H
GND
CNT4[N] DEX (1) H
CNT5[N] DEX START (1) H
CNT4[N] TO10 TRANS (1) H
CNT5[N] TO10 ADR LD (1) H
CNT5[N] TO10 BC LD (1) H
CNT7[N] SP CLK (1) H
-CNT4[N] TO10 E-B REQ H
-CNT4[N] TO11 ADR INC H
CH2 CNT3[N] DIAG 10/11 (1) H
CNT3[N] DIAG DS 05 (1) H
CNT4[N] DEX ADR2 H
CNT4[N] CON ST CLR H
CNT4[N] CON ST CLR L
BIN CTR 74193 E44
CNT3[N] UN DAT 04 H
CNT3[N] UN DAT 03 H
CNT3[N] UN DAT 02 H
CNT3[N] UN DAT 01 H
CNT4[N] STATE COUNT 0 H
CARRY
BORROW
COUNT
UP
DOWN
CLR
LOAD
CNT4[N] GD ST CLK H
CNT4[N] CON ST CLR H
CNT2[N] REG LD L
CNT7[N] SP CLK (1) H
BJ1 -DPS1[N] ABC RG 13 L
-CNT1[N] DLY INC L
DECODER 74442 E24
CNT4[N] DEX ADR1 L
CNT4[N] DEX ADR2 L
CNT4[N] DEX WD1 L
BF1
CNT4[N] DEX WD2 L
CNT4[N] DEX WD3 L
CNT4[N] DEX DONE L
CNT4[N] LOOP L
CNT4[N] DEX (0) H
SEL
CNT4[N] STATE COUNT 0 H
CNT4[N] TO10 TRANS (1) L
GND
DECODER 74154 E23
CNT4[N] TO10 DLY RD L
CNT4[N] TO10 DLY INC L
CNT4[N] TO10 BC RD L
CNT4[N] TO10 BC ADD L
CNT4[N] TO10 BC INC L
CNT4[N] TO10 ADR RD L
CNT4[N] TO10 FL WR L
CNT4[N] TO10 E-BUF FILL L
CNT4[N] TO10 E-B REQ L
AND EN
CNT4[N] TO11 TRANS (1) L
DECODER 74154 E33
CNT4[N] TO11 DLY RD L
CNT4[N] TO11 DLY INC L
CNT4[N] TO11 BC RD L
CNT4[N] TO11 BC INC L
CNT4[N] TO11 I/O FUNC L
CNT4[N] TO11 SHIFT L
CNT4[N] TO11 E-BUF STORE L
CNT4[N] TO11 FILE RD L
BP2
CNT4[N] TO11 ADR ADD L
CNT4[N] TO11 ADR INC L
CNT4[N] EBH SET L
CH2 CNT3[N] DIAG 10/11 (1) H
CNT4[N] TO11 ADR ADD L
CNT4[N] TO11 ADR ADD H
CNT4[N] TO10 E-BUF FILL L
CNT4[N] TO10 E-BUF FILL H
CH2 CNT3[N] DIAG 10/11 (1) H
CNT4[N] E-BUS LOOP L
CNT4[N] LOOP L
CNT4[N] DEX DONE L
CNT4[N] DEX DONE H
NOTES:
1.THE 74193 UP-COUNTER HAS THE FOLLOWING CHARACTERISTICS.
UP-COUNT: IT SETS UP WHEN LOW AND COUNTS ON THE POSITIVE TRANSITION OF THE COUNT PULSE.
CLR: OVER RIDES THE UP -COUNT PULSE WHEN BOTH ARE TRUE.
LOAD: SETS UP WHEN LOW AND LOADS ON THE POSTIVE TRANSITION OF THE LOAD PULSE.
14 OF 9
REVISIONS
M8553-0-CNT4
DTE20 CONTROL LOGIC
M8553-0-CNT4
D1
CS
D
KL10
8-DD-M8553-0

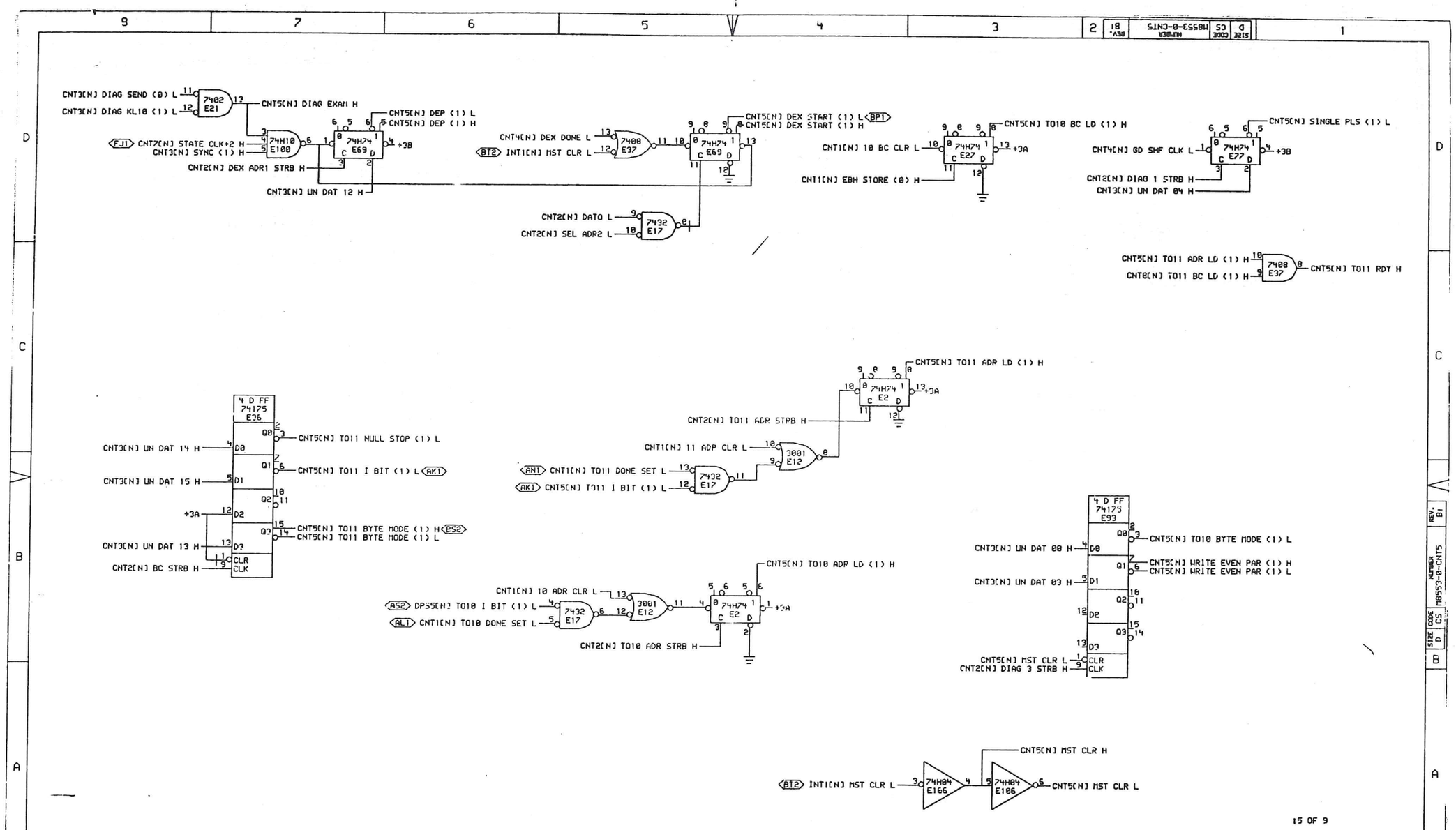

"THIS DRAWING AND SPECIFICATIONS, HEREIN, ARE THE PROPERTY OF DIGITAL EQUIPMENT CORPORATION AND SHALL NOT BE REPRODUCED OR COPIED OR USED IN WHOLE OR IN PART AS THE BASIS FOR THE MANUFACTURE OR SALE OF ITEMS WITHOUT WRITTEN PERMISSION.
COPYRIGHT © 1976, DIGITAL EQUIPMENT CORPORATION"

REVISIONS		
CHK	CHANGE NO.	REV
	M3553-00008	B1
	W. BRUCKERT	

digital

DRN.	DATE 16-JUN-76	ENG.	DATE 22-JUN-76
CHK.	DATE	BOARD LOCATION:	
		SHEET 1 OF 1	
CNT5X.DRW[4,426]	16-JUN-76 09:00	NEXT HIGHER ASSEMBLY:	
FIRST USED ON OPTION/MODEL: KL10		B-DD-M8553-0	

TITLE: DTE20 CONTROL LOGIC

SIZE	CODE	NUMBER	REV.
D	CS	M8553-0-CNT5	B1

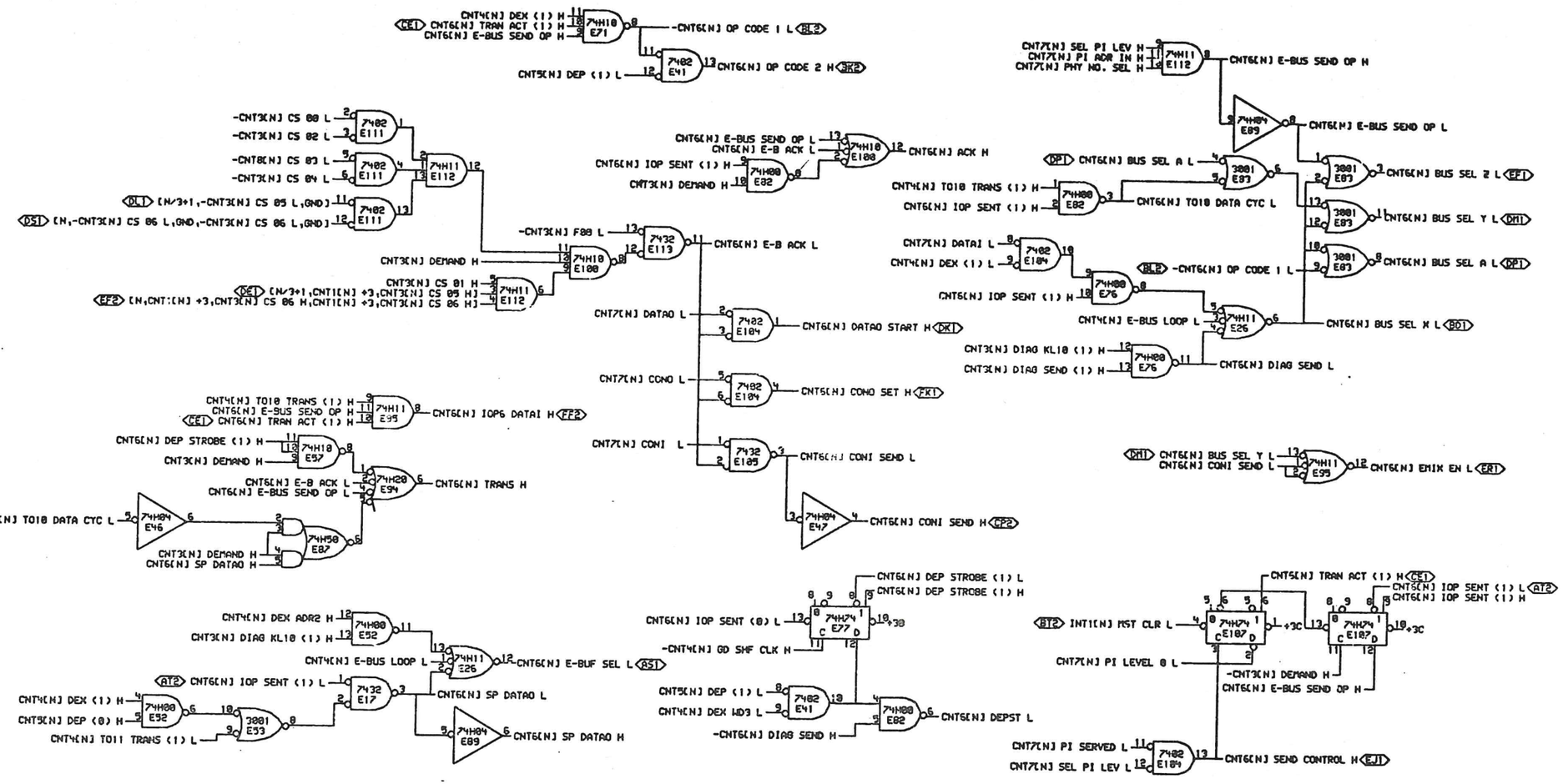

"THIS DRAWING AND SPECIFICATIONS, HEREIN, ARE THE PROPERTY OF DIGITAL EQUIPMENT CORPORATION AND SHALL NOT BE REPRODUCED OR COPIED OR USED IN WHOLE OR IN PART AS THE BASIS FOR THE MANUFACTURE OR SALE OF ITEMS WITHOUT WRITTEN PERMISSION. COPYRIGHT © 1979, DIGITAL EQUIPMENT CORPORATION"

REVISIONS		
CHK	CHANGE NO.	REV

M8553-0-0103 B — VS553-00008 B1
B.B.BRUCKERT — W BRUCKERT

CNTSX.DRW(4,425) 22-DEC-79 11:19

DRN.	DATE 08-DEC-79	ENG.	DATE 12/4/79
CHK.	DATE 11/5/79	BOARD LOCATION: SHEET	OF 1

NEXT HIGHER ASSEMBLY: B-DD-M8553-0

FIRST USED ON OPTION/MODEL: KL10

TITLE: DTE20 CONTROL LOGIC

SIZE	CODE	NUMBER	REV.
D	CS	M8553-0-CNT6	B1

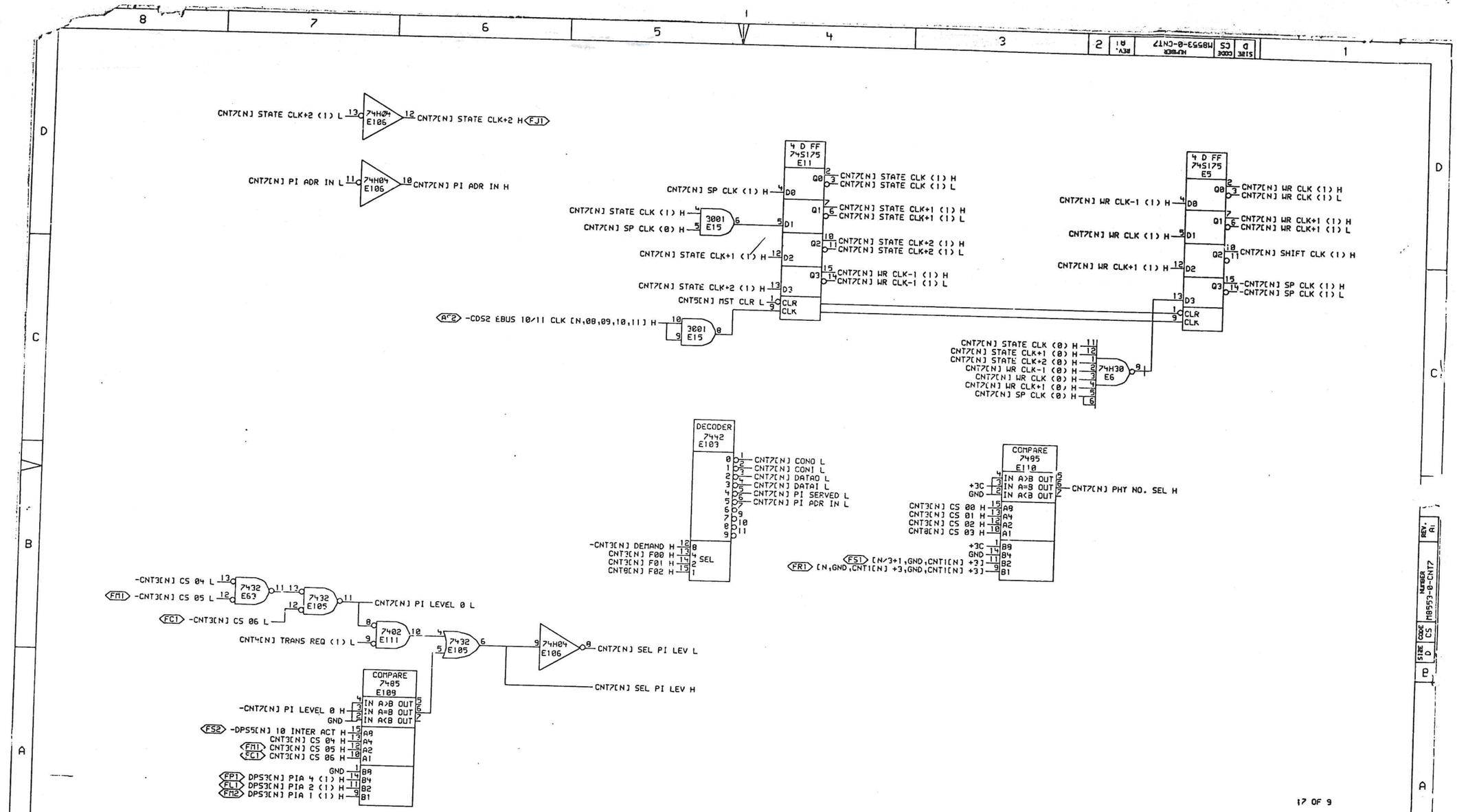

"THIS DRAWING AND SPECIFICATIONS, HEREIN, ARE THE PROPERTY OF DIGITAL EQUIPMENT CORPORATION AND SHALL NOT BE REPRODUCED OR COPIED OR USED IN WHOLE OR IN PART AS THE BASIS FOR THE MANUFACTURE OR SALE OF ITEMS WITHOUT WRITTEN PERMISSION.
COPYRIGHT © 1975, DIGITAL EQUIPMENT CORPORATION"

REVISIONS			
CH<	CHANGE NO.	REV	
	M8553-00002	A	
	M8553-00003	A1	

W. BRUCKERT

digital

DRN J. Formby DATE 5/23/75
CHK'D DATE 5/23/75
ENG W. Bruckert DATE 6/18/75
BOARD LOCATION:
SHEET 1 OF 1
NEXT HIGHER ASSEMBLY: B-DD-M8553-0
CNT7X(4,426) 22-MAY-75 15:34
FIRST USED ON OPTION/MODEL: KL10

TITLE: DTE20 CONTROL LOGIC

SIZE	CODE	NUMBER	REV.
D	CS	M8553-0-CNT7	A1

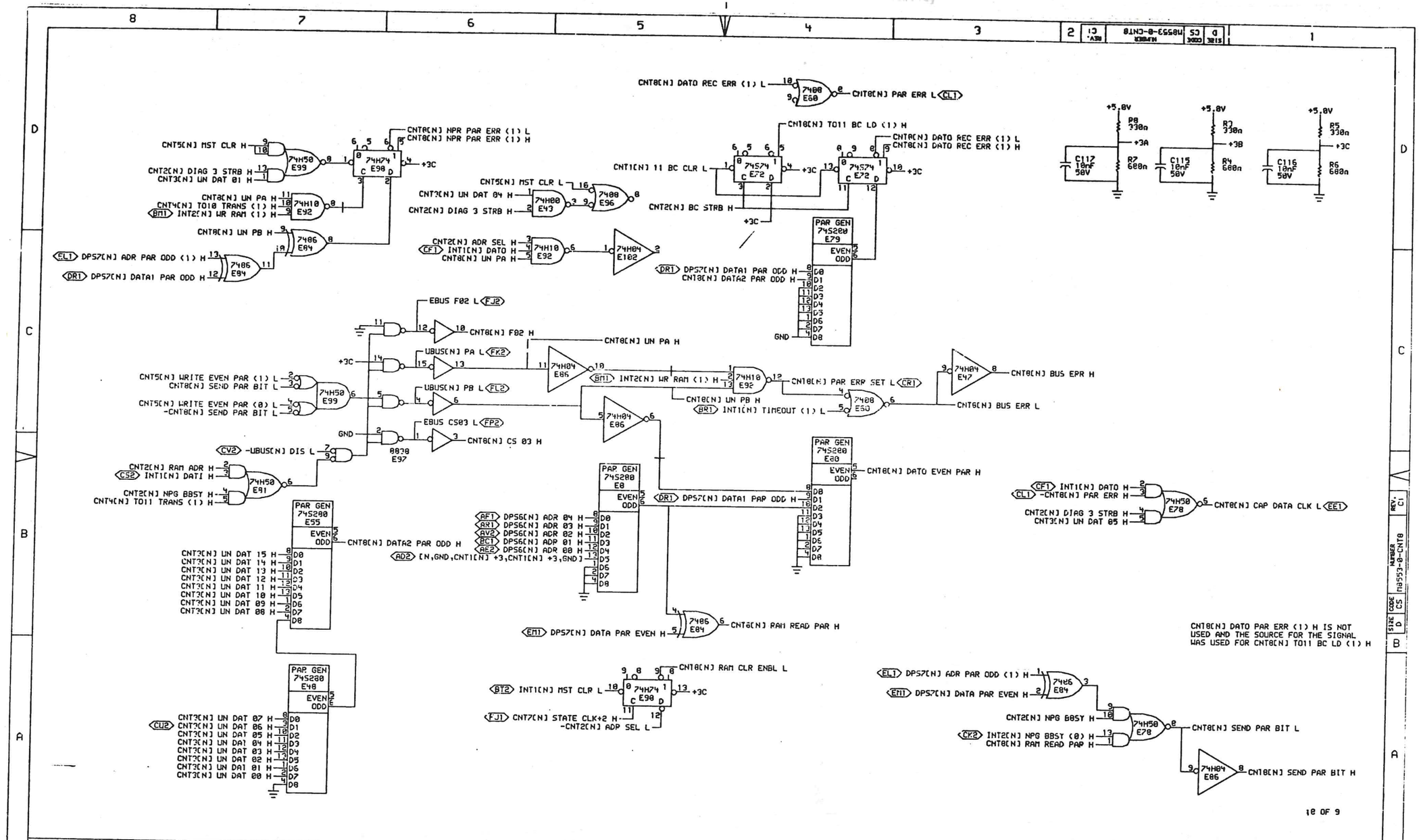

"THIS DRAWING AND SPECIFICATIONS, HEREIN, ARE THE PROPERTY OF DIGITAL EQUIPMENT CORPORATION AND SHALL NOT BE REPRODUCED OR COPIED OR USED IN WHOLE OR IN PART AS THE BASIS FOR THE MANUFACTURE OR SALE OF ITEMS WITHOUT WRITTEN PERMISSION.
COPYRIGHT © 1976, DIGITAL EQUIPMENT CORPORATION"

REVISIONS		
CHK	CHANGE NO.	REV
	M8553-00003	C1

M8553-00003 C1
W. BRUCKET

digital

DRN. G. Lounsby 16-JUN-76
CHK. 16-JUN-76
DATE ENG. 22-JUL-76
DATE 6/16/76
BOARD LOCATION:
SHEET 1 OF 1
CNT4X.DRW[4,426] 16-JUN-76 09:02
NEXT HIGHER ASSEMBLY: B-DD-M8553-0
FIRST USED ON OPTION/MODEL: KL10

TITLE: DTE20 CONTROL LOGIC

SIZE	CODE	NUMBER	REV.
D	CS	M8553-0-CNT8	C1

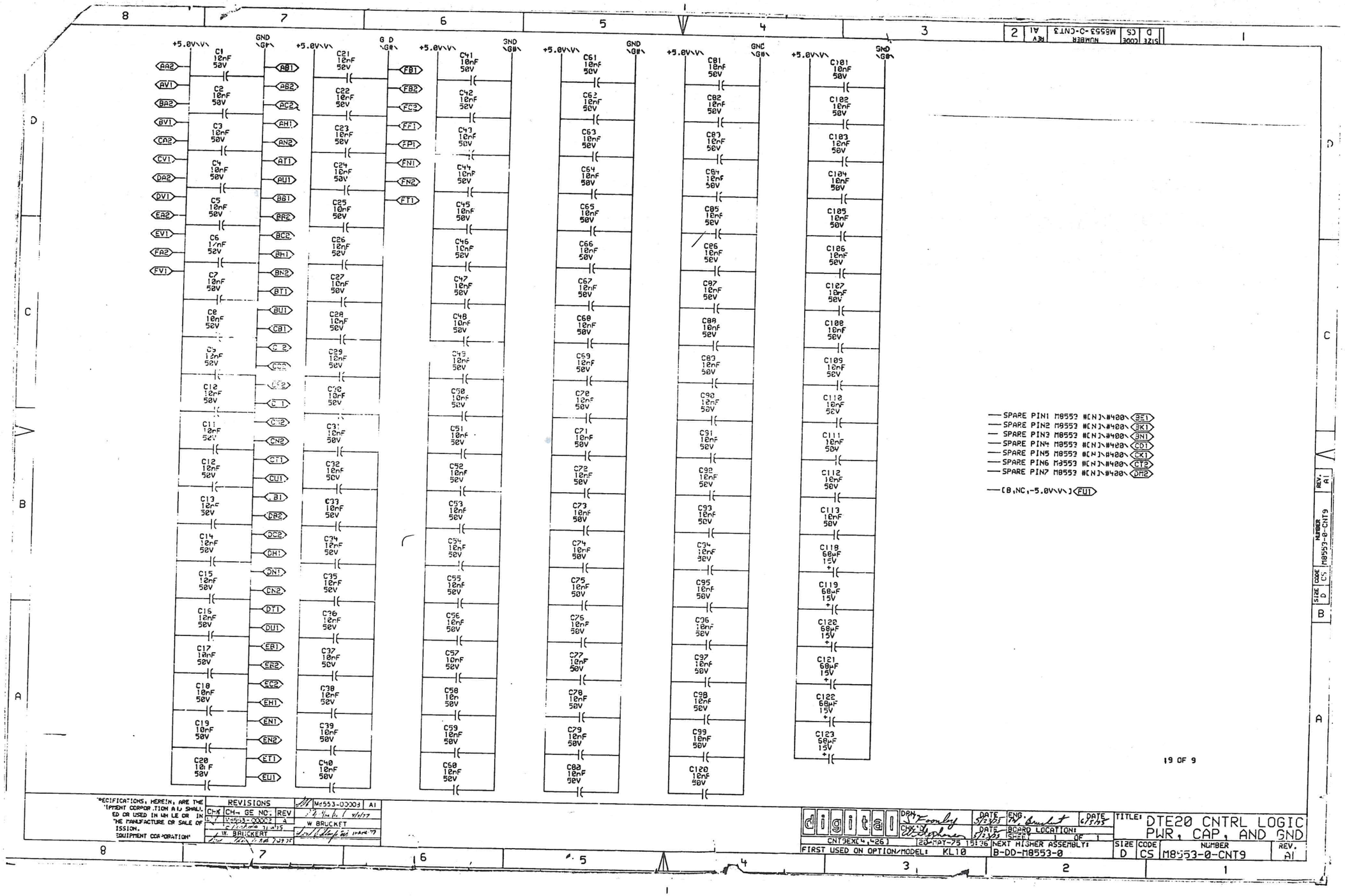
SPARE PIN1 M8553 #[N]\#400\ BE1
SPARE PIN2 M8553 #[N]\#400\ BK1
SPARE PIN3 M8553 #[N]\#400\ BN1
SPARE PIN4 M8553 #[N]\#400\ CD1
SPARE PIN5 M8553 #[N]\#400\ CK1
SPARE PIN6 M8553 #[N]\#400\ CT2
SPARE PIN7 M8553 #[N]\#400\ DM2
[B,NC,-5.0V\V\] FU1
19 OF 9
DTE20 CNTRL LOGIC
PWR, CAP, AND GND
M8553-0-CNT9
KL10
B-DD-M8553-0

REVISION CONTROL SHEET

CUSTOMER PRINT SET	MFG SET	DRAWING NO	NO OF SHT	DESCRIPTION	OPTION NO/FILE DATE	REVISIONS (NEW LAYOUT VERSION)		
			-	MODULE REVISION		K	L	L
		D-UA-M9553-Ø-Ø	7	1Ø/11 BUS AND DATA CONTROL		J	K	K
		D-CS-M8553-Ø-CNT1	1	DTE20 CONTROL LOGIC		C	C	C
		D-CS-M8553-Ø-CNT2	1	DTE20 CONTROL LOGIC		D	E	E
		D-CS-M8553-Ø-CNT3	1	DTE20 CONTROL LOGIC		B	B	B
		D-CS-M8553-Ø-CNT4	1	DTE20 CONTROL LOGIC		E	E	E
		D-CS-M8553-Ø-CNT5	1	DTE20 CONTROL LOGIC		C	C	C
		D-CS-M8553-Ø-CNT6	1	DTE20 CONTROL LOGIC		C	C	C
		D-CS-M8553-Ø-CNT7	1	DTE20 CONTROL LOGIC		B	B	B
		D-CS-M8553-Ø-CNT8	1	DTE20 CONTROL LOGIC		D	D	D
		D-CS-M8553-Ø-CNT9	1	DTE20 CONTROL LOGIC		B	C	C
				PWR, CAP, AND GND				
		K-PC-M8553-0-DBC	1	P.C. DESIGN DATA BASE				
		D-AH-M8553-Ø-5	4	1J/11 BUS AND DATA CONTROL		E	E	F
		B-MH-M8553-Ø-6	1	MODULE ECO HISTORY		D	D	D
						REF	REF	REF
		5010514	-	ETCH CIRCUIT BOARD		E	E	E
		P00-M8553-ØØ		PROCESS SHEET (REF ONLY)		-	-	-
					ECO NO	00008	00009	MRØ1Ø

CUSTOMER PRINT SET CODES
X = PRINT OF DOCUMENT INCLUDED IN PRINT SET
C = INCLUDES ALL PRINTS INDICATED ON DOCUMENT
S = CONFIDENTIAL AUTHORIZED SIGNATURE REQUIRED

TITLE	SHEET	SIZE	CODE	NUMBER	REV
1Ø/11 BUS AND DATA CONTROL	3 OF 3	B	DD	M8553-Ø	L

MR

THIS DRAWING AND SPECIFICATIONS, HEREIN, ARE THE PROPERTY OF DIGITAL EQUIPMENT CORPORATION AND SHALL NOT BE REPRODUCED OR COPIED OR USED IN WHOLE OR IN PART AS THE BASIS FOR THE MANUFACTURE OR SALE OF ITEMS WITHOUT WRITTEN PERMISSION.
COPYRIGHT © 1976 DIGITAL EQUIPMENT CORPORATION

REVISIONS		
CHK	CHANGE NO	REV

TITLE	SIZE	CODE	NUMBER	REV.
10/11 BUS AND DATA CONTROL	D	UA	M8553-0-0	
SCALE 2/1	SHEET 2 OF 5		DIST.	

DEC FORM NO DRD 127

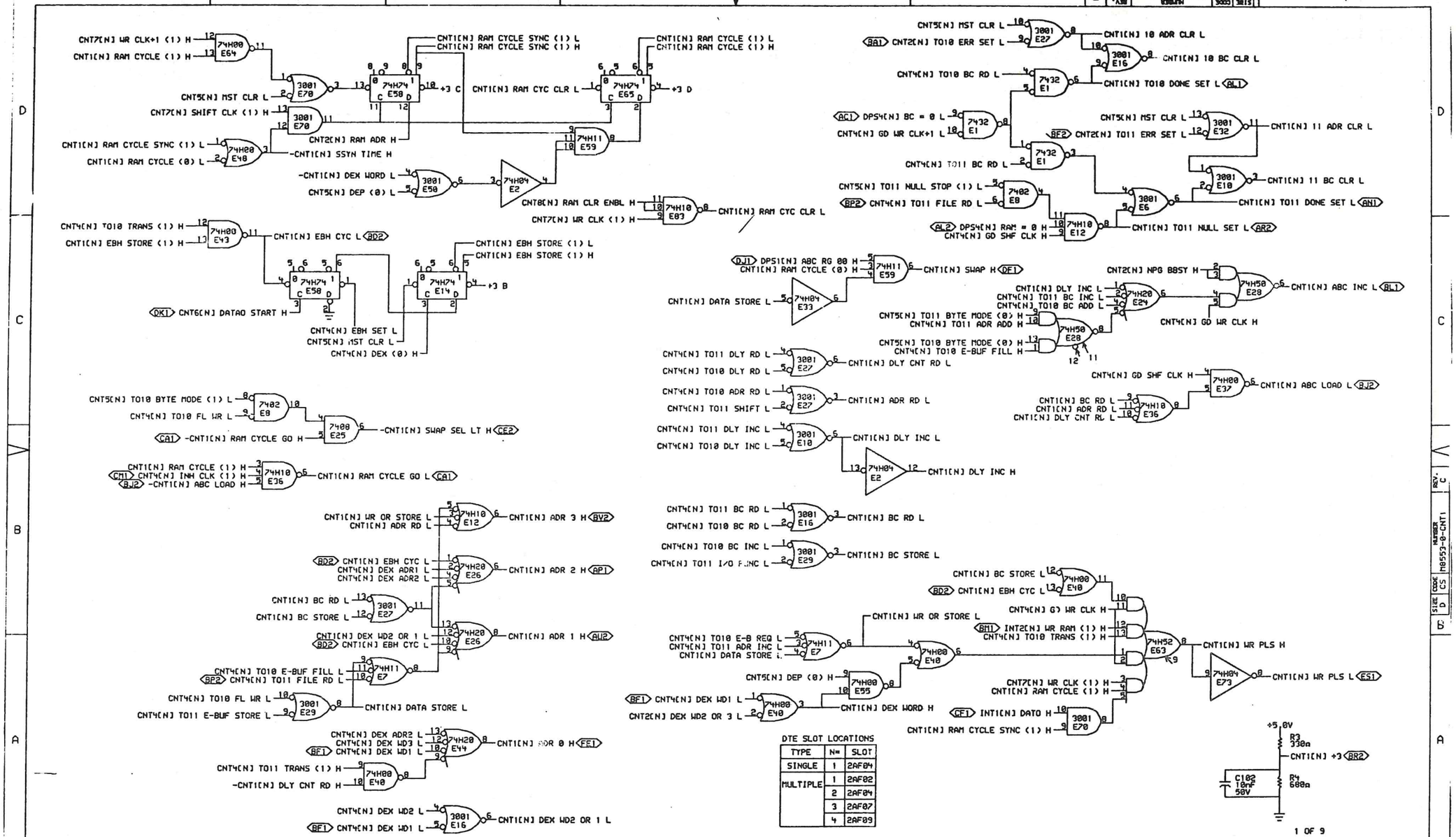

DTE SLOT LOCATIONS

TYPE	N=	SLOT
SINGLE	1	2AF04
MULTIPLE	1	2AF02
	2	2AF04
	3	2AF07
	4	2AF09

"THIS DRAWING AND SPECIFICATIONS, HEREIN, ARE THE PROPERTY OF DIGITAL EQUIPMENT CORPORATION AND SHALL NOT BE REPRODUCED OR COPIED OR USED IN WHOLE OR IN PART AS THE BASIS FOR THE MANUFACTURE OR SALE OF ITEMS WITHOUT WRITTEN PERMISSION. COPYRIGHT © 1977, DIGITAL EQUIPMENT CORPORATION"

REVISIONS		
CHK	CHANGE NO.	REV

M8553-0-CNT1 C
W. BRUCKERT

digital

DRN. J. Loosly
CHKD. J. Bailey
DATE 23-FEB-77
ENG. J. Bailey
DATE 23-FEB-77
DATE 31-Oct-77
DATE 7-23-77
SCHD LOCATION: SHEET 1 OF 1
CNT1EE.CRUC4.614 | 30-FEB-77 16:54
NEXT HIGHER ASSEMBLY: B-DD-M8553-0
FIRST USED ON OPTION/MODEL: KL10

TITLE: DTE20 CONTROL LOGIC

SIZE	CODE	NUMBER	REV.
D	CS	M8553-0-CNT1	C

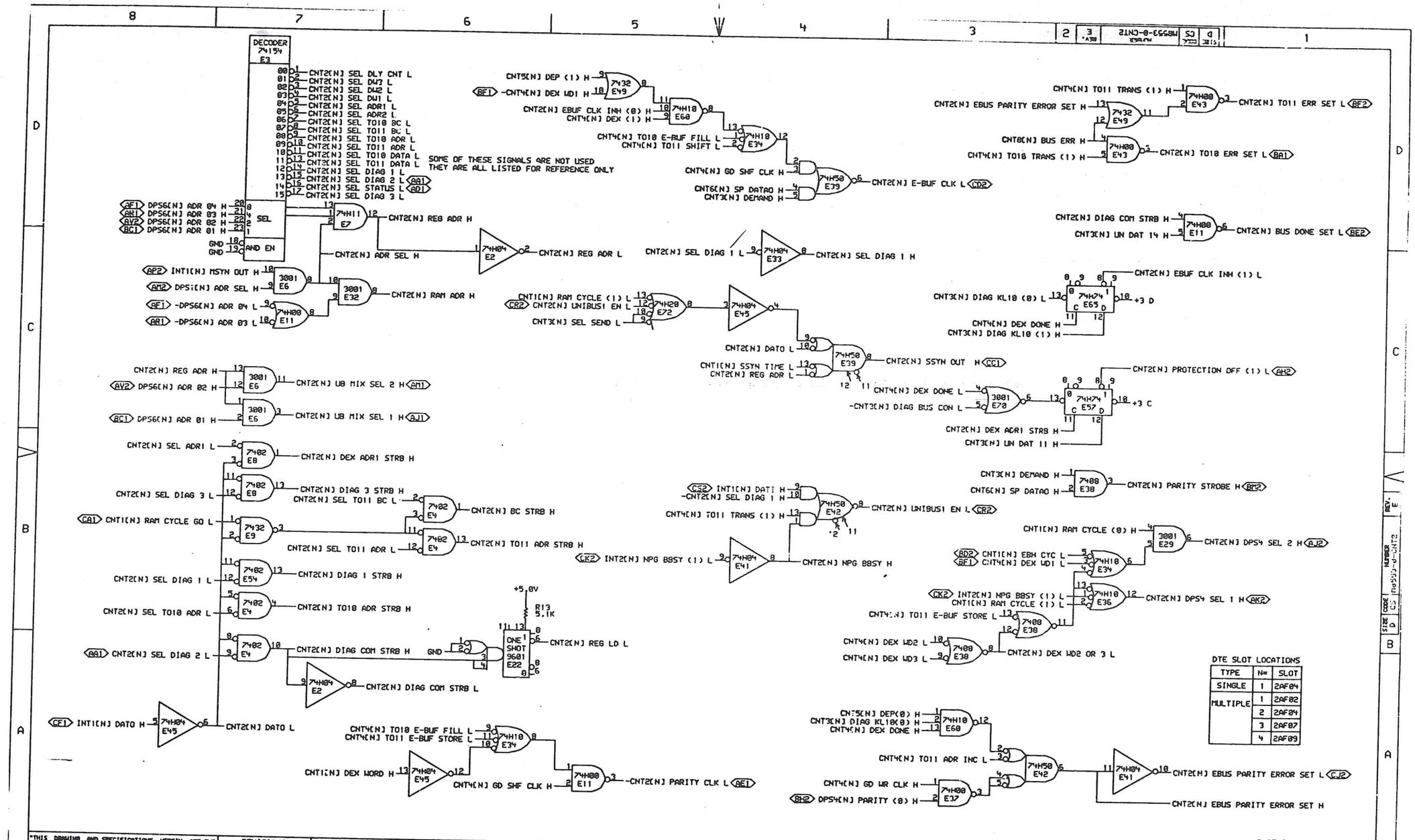

DTE SLOT LOCATIONS

TYPE	N=	SLOT
SINGLE	1	2AF04
MULTIPLE	1	2AF02
	2	2AF04
	3	2AF07
	4	2AF09

"THIS DRAWING AND SPECIFICATIONS, HEREIN, ARE THE PROPERTY OF DIGITAL EQUIPMENT CORPORATION AND SHALL NOT BE REPRODUCED OR COPIED OR USED IN WHOLE OR IN PART AS THE BASIS FOR THE MANUFACTURE OR SALE OF ITEMS WITHOUT WRITTEN PERMISSION.
COPYRIGHT © 1977, DIGITAL EQUIPMENT CORPORATION"

REVISIONS

CHK	CHANGE NO.	REV
—	[illegible]	E
	W. BECKER	

digital

CNT2EE.DRA(4,614) 02-JUN-77 08:30

DRN. [illegible] DATE 02-JUN-77 ENG. DATE
CHK. [illegible] DATE 3/7/77 BOARD LOCATION: SHEET OF

FIRST USED ON OPTION/MODEL: KL10 NEXT HIGHER ASSEMBLY: B-DD-M8553-0

2 OF 9

TITLE: DTE20 CONTROL LOGIC

SIZE	CODE	NUMBER	REV.
D	CS	M8553-0-CNT2	E

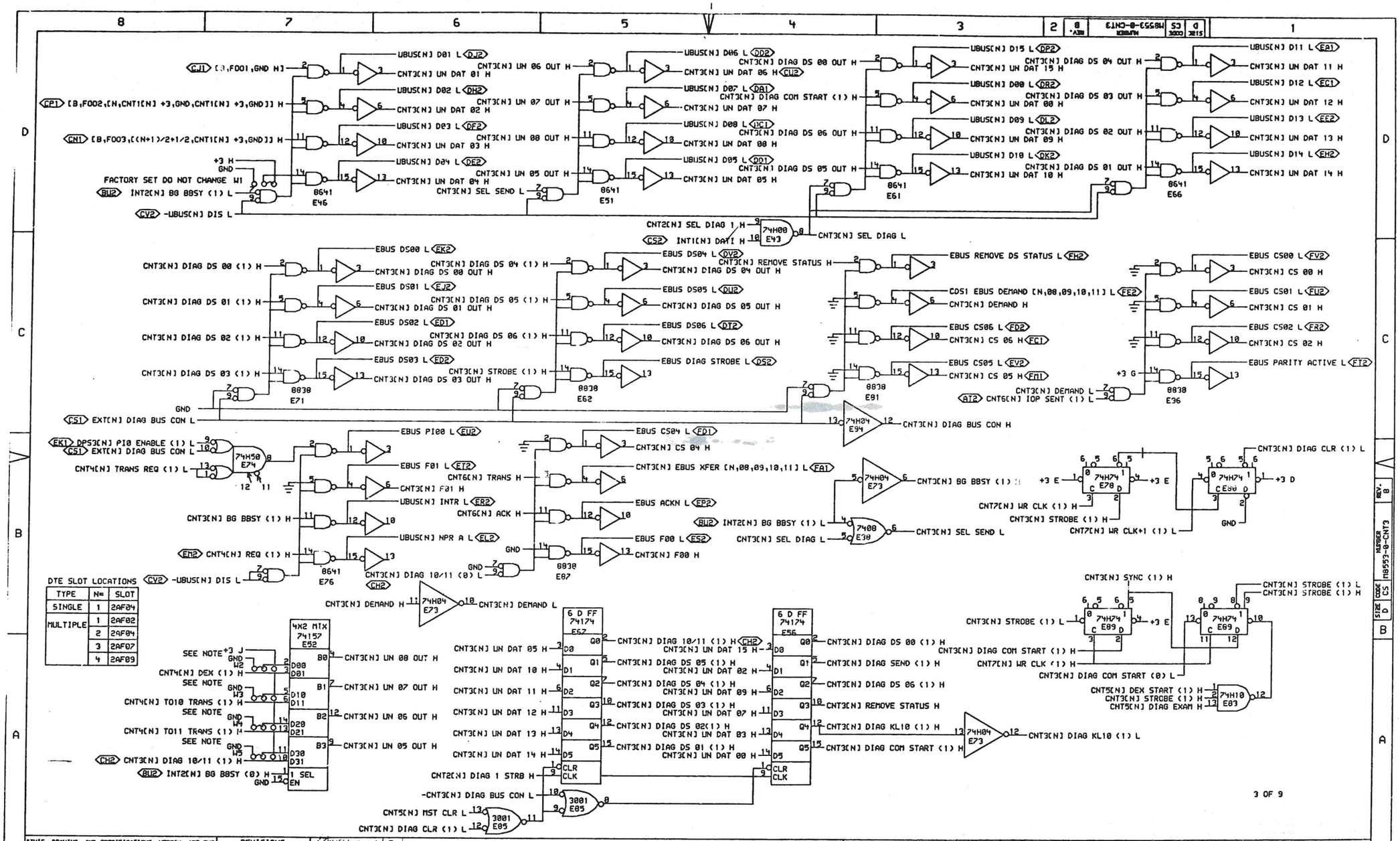

"THIS DRAWING AND SPECIFICATIONS, HEREIN, ARE THE PROPERTY OF DIGITAL EQUIPMENT CORPORATION AND SHALL NOT BE REPRODUCED OR COPIED OR USED IN WHOLE OR IN PART AS THE BASIS FOR THE MANUFACTURE OR SALE OF ITEMS WITHOUT WRITTEN PERMISSION. COPYRIGHT © 1977, DIGITAL EQUIPMENT CORPORATION"

REVISIONS		
CHK	CHANGE NO.	REV

M8553-0-CNT3 B
W. BRUCKERT

digital

DRN. J. Loomis DATE 10-FEB-77
ENG. DATE 23-FEB-77
CHK. DATE
CNT3EE.DRL[4,614] 11-FEB-77 10:57
BOARD LOCATION: SHEET 1 OF 1
NEXT HIGHER ASSEMBLY: 8-DD-M8553-0
FIRST USED ON OPTION/MODEL: KL10

TITLE: DTE20 CONTROL LOGIC

SIZE	CODE	NUMBER	REV.
D	CS	M8553-0-CNT3	B

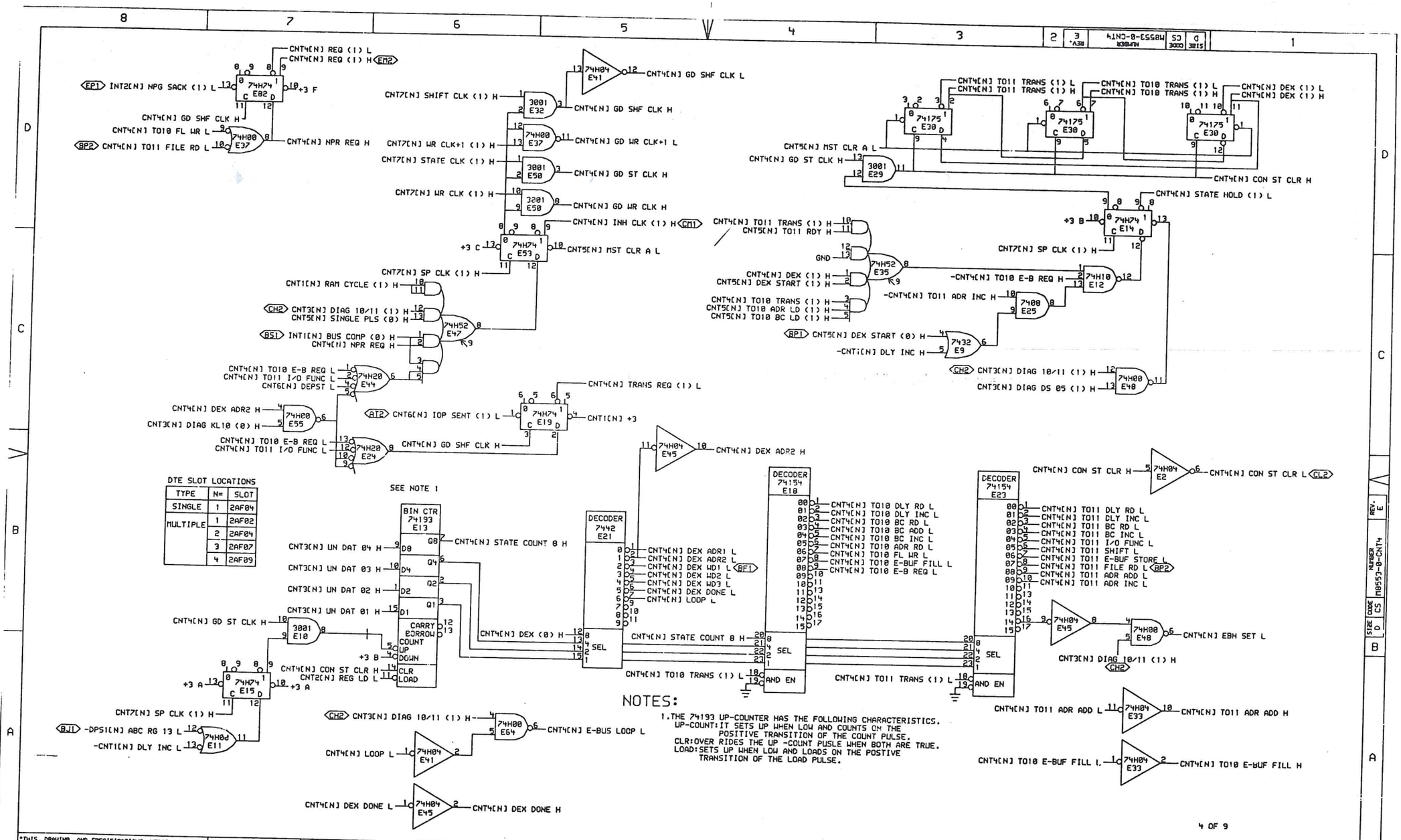
CNT4[N] REQ (1) L
CNT4[N] REQ (1) H
EP1 INT2[N] NPG SACK (1) L
74H74 E82
+3 F
CNT4[N] GD SHF CLK H
CNT4[N] TO10 FL WR L
BP2 CNT4[N] TO11 FILE RD L
74H00 E37
CNT4[N] NPR REQ H
CNT7[N] SHIFT CLK (1) H
3001 E32
74H04 E41
CNT4[N] GD SHF CLK L
CNT4[N] GD SHF CLK H
CNT7[N] WR CLK+1 (1) H
74H00 E37
CNT4[N] GD WR CLK+1 L
CNT7[N] STATE CLK (1) H
3001 E50
CNT4[N] GD ST CLK H
CNT7[N] WR CLK (1) H
3001 E50
CNT4[N] GD WR CLK H
CNT4[N] INH CLK (1) H
74H74 E53
+3 C
CNT5[N] MST CLR A L
CNT7[N] SP CLK (1) H
CNT1[N] RAM CYCLE (1) H
CH2 CNT3[N] DIAG 10/11 (1) H
CNT5[N] SINGLE PLS (0) H
74H52 E47
BS1 INT1[N] BUS COMP (0) H
CNT4[N] NPR REQ H
CNT4[N] TO10 E-B REQ L
CNT4[N] TO11 I/O FUNC L
CNT6[N] DEPST L
74H20 E44
CNT4[N] TRANS REQ (1) L
CNT4[N] DEX ADR2 H
CNT3[N] DIAG KL10 (0) H
74H00 E55
AT2 CNT6[N] IOP SENT (1) L
74H74 E19
CNT1[N] +3
CNT4[N] TO10 E-B REQ L
CNT4[N] TO11 I/O FUNC L
74H20 E24
CNT4[N] GD SHF CLK H
CNT4[N] TO11 TRANS (1) L
CNT4[N] TO11 TRANS (1) H
CNT4[N] TO10 TRANS (1) L
CNT4[N] TO10 TRANS (1) H
CNT4[N] DEX (1) L
CNT4[N] DEX (1) H
74175 E30
CNT5[N] MST CLR A L
CNT4[N] GD ST CLK H
3001 E29
CNT4[N] CON ST CLR H
CNT4[N] STATE HOLD (1) L
+3 B
74H74 E14
CNT7[N] SP CLK (1) H
CNT4[N] TO11 TRANS (1) H
CNT5[N] TO11 RDY H
GND
74H52 E35
CNT4[N] DEX (1) H
CNT5[N] DEX START (1) H
-CNT4[N] TO10 E-B REQ H
74H10 E12
-CNT4[N] TO11 ADR INC H
7400 E25
CNT4[N] TO10 TRANS (1) H
CNT5[N] TO10 ADR LD (1) H
CNT5[N] TO10 BC LD (1) H
BP1 CNT5[N] DEX START (0) H
-CNT1[N] DLY INC H
7432 E9
CH2 CNT3[N] DIAG 10/11 (1) H
CNT3[N] DIAG DS 05 (1) H
74H00 E48
DTE SLOT LOCATIONS
TYPE | N= | SLOT
SINGLE | 1 | 2AF04
MULTIPLE | 1 | 2AF02
2 | 2AF04
3 | 2AF07
4 | 2AF09
SEE NOTE 1
BIN CTR 74193 E13
CNT3[N] UN DAT 04 H
CNT3[N] UN DAT 03 H
CNT3[N] UN DAT 02 H
CNT3[N] UN DAT 01 H
CNT4[N] STATE COUNT 0 H
CNT4[N] GD ST CLK H
3001 E10
+3 B
CNT4[N] CON ST CLR H
CNT2[N] REG LD L
CLR
LOAD
COUNT UP
DOWN
CARRY
BORROW
+3 A
74H74 E15
CNT7[N] SP CLK (1) H
BJ1 -DPS1[N] ABC RG 13 L
-CNT1[N] DLY INC L
74H04 E11
CH2 CNT3[N] DIAG 10/11 (1) H
74H00 E64
CNT4[N] E-BUS LOOP L
CNT4[N] LOOP L
74H04 E41
CNT4[N] DEX DONE L
74H04 E45
CNT4[N] DEX DONE H
DECODER 7442 E21
CNT4[N] DEX (0) H
SEL
AND EN
CNT4[N] DEX ADR1 L
CNT4[N] DEX ADR2 L
CNT4[N] DEX WD1 L
CNT4[N] DEX WD2 L
CNT4[N] DEX WD3 L
CNT4[N] DEX DONE L
CNT4[N] LOOP L
BF1
74H04 E45
CNT4[N] DEX ADR2 H
DECODER 74154 E18
CNT4[N] STATE COUNT 0 H
CNT4[N] TO10 TRANS (1) L
CNT4[N] TO10 DLY RD L
CNT4[N] TO10 DLY INC L
CNT4[N] TO10 BC RD L
CNT4[N] TO10 BC ADD L
CNT4[N] TO10 BC INC L
CNT4[N] TO10 ADR RD L
CNT4[N] TO10 FL WR L
CNT4[N] TO10 E-BUF FILL L
CNT4[N] TO10 E-B REQ L
DECODER 74154 E23
CNT4[N] TO11 TRANS (1) L
CNT4[N] TO11 DLY RD L
CNT4[N] TO11 DLY INC L
CNT4[N] TO11 BC RD L
CNT4[N] TO11 BC INC L
CNT4[N] TO11 I/O FUNC L
CNT4[N] TO11 SHIFT L
CNT4[N] TO11 E-BUF STORE L
CNT4[N] TO11 FILE RD L
CNT4[N] TO11 ADR ADD L
CNT4[N] TO11 ADR INC L
BP2
CNT4[N] CON ST CLR H
74H04 E2
CNT4[N] CON ST CLR L
CL2
74H04 E45
74H00 E48
CNT4[N] EBH SET L
CNT3[N] DIAG 10/11 (1) H
CH2
CNT4[N] TO11 ADR ADD L
74H04 E33
CNT4[N] TO11 ADR ADD H
CNT4[N] TO10 E-BUF FILL L
74H04 E33
CNT4[N] TO10 E-BUF FILL H
NOTES:
1.THE 74193 UP-COUNTER HAS THE FOLLOWING CHARACTERISTICS.
UP-COUNT: IT SETS UP WHEN LOW AND COUNTS ON THE POSITIVE TRANSITION OF THE COUNT PULSE.
CLR: OVER RIDES THE UP -COUNT PUSLE WHEN BOTH ARE TRUE.
LOAD: SETS UP WHEN LOW AND LOADS ON THE POSTIVE TRANSITION OF THE LOAD PULSE.
4 OF 9
*THIS DRAWING AND SPECIFICATIONS, HEREIN, ARE THE PROPERTY OF DIGITAL EQUIPMENT CORPORATION AND SHALL NOT BE REPRODUCED OR COPIED OR USED IN WHOLE OR IN PART AS THE BASIS FOR THE MANUFACTURE OR SALE OF ITEMS WITHOUT WRITTEN PERMISSION.
COPYRIGHT © 1977, DIGITAL EQUIPMENT CORPORATION*
REVISIONS
CHK | CHANGE NO. | REV
W. BRUCKERT
DRW. | DATE 14-FEB-77 | ENG. | DATE 23-FEB-77
CHK. | DATE 2/4/77 | BOARD LOCATION: | SHEET 1 OF 1
CNT4EE.DRW[4,614] 14-FEB-77 09:23 | NEXT HIGHER ASSEMBLY: B-DD-M8553-0
FIRST USED ON OPTION/MODEL: KL10
TITLE: DTE20 CONTROL LOGIC
SIZE D | CODE CS | NUMBER M8553-0-CNT4 | REV. E

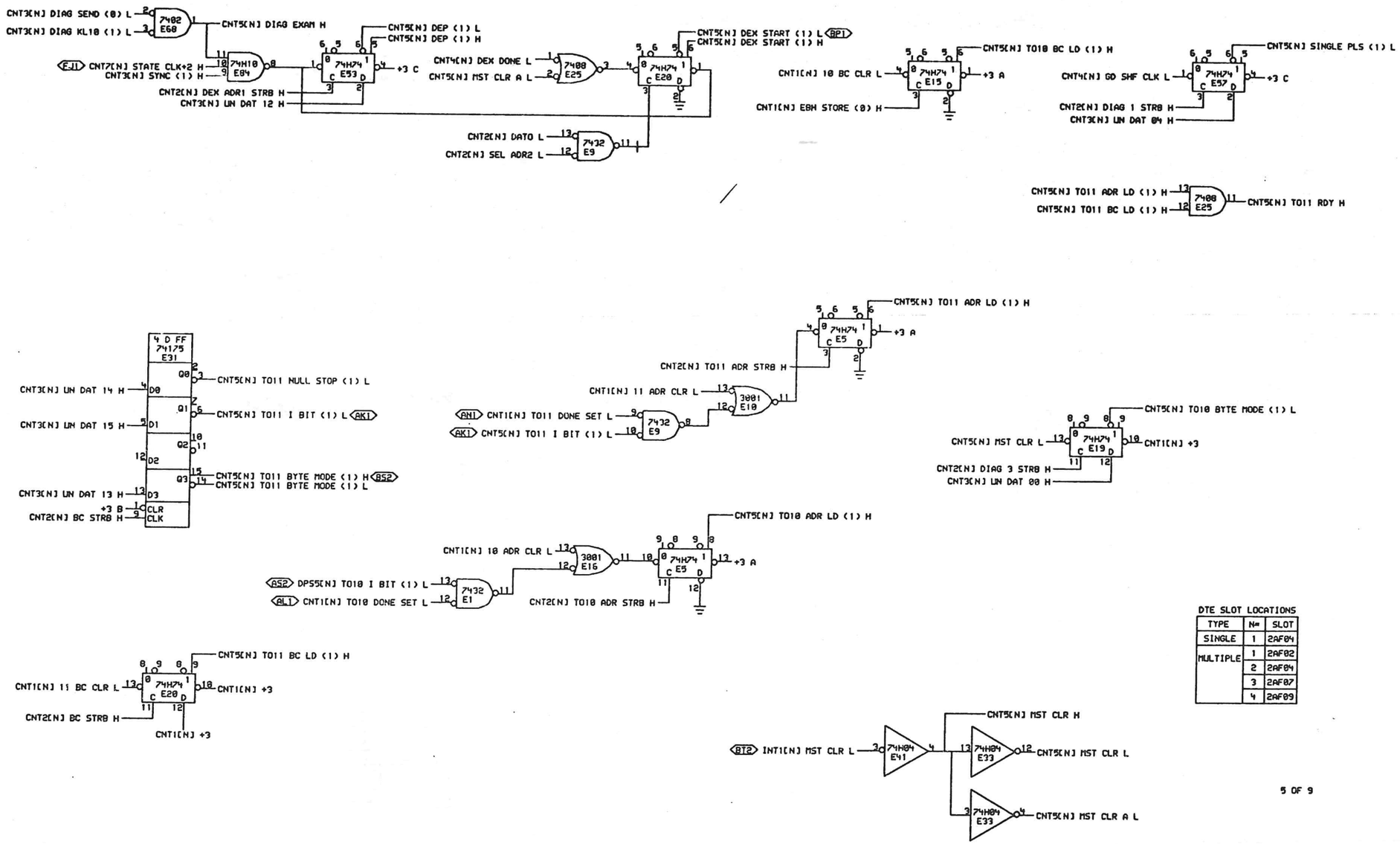

DTE SLOT LOCATIONS

TYPE	N#	SLOT
SINGLE	1	2AF04
MULTIPLE	1	2AF02
	2	2AF04
	3	2AF07
	4	2AF09

5 OF 9

"THIS DRAWING AND SPECIFICATIONS, HEREIN, ARE THE PROPERTY OF DIGITAL EQUIPMENT CORPORATION AND SHALL NOT BE REPRODUCED OR COPIED OR USED IN WHOLE OR IN PART AS THE BASIS FOR THE MANUFACTURE OR SALE OF ITEMS WITHOUT WRITTEN PERMISSION. COPYRIGHT © 1977, DIGITAL EQUIPMENT CORPORATION"

REVISIONS		
CHK	CHANGE NO.	REV
	M8553-0-CN03	C
	7/4/77	
	W. BRUCKENT	

digital

DRAW. J. Lavoie 10-FEB-77
CHK'D. 2/11/77
DATE
ENG. W. Bruckent 23FEB77
DATE
BOARD LOCATION:
SHEET OF
CNT3EE.DRA(4,614) 09-FEB-77 13:40
NEXT HIGHER ASSEMBLY: B-DD-M8553-0
FIRST USED ON OPTION/MODEL: KL10

TITLE: DTE20 CONTROL LOGIC

SIZE	CODE	NUMBER	REV.
D	CS	M8553-0-CNT5	C

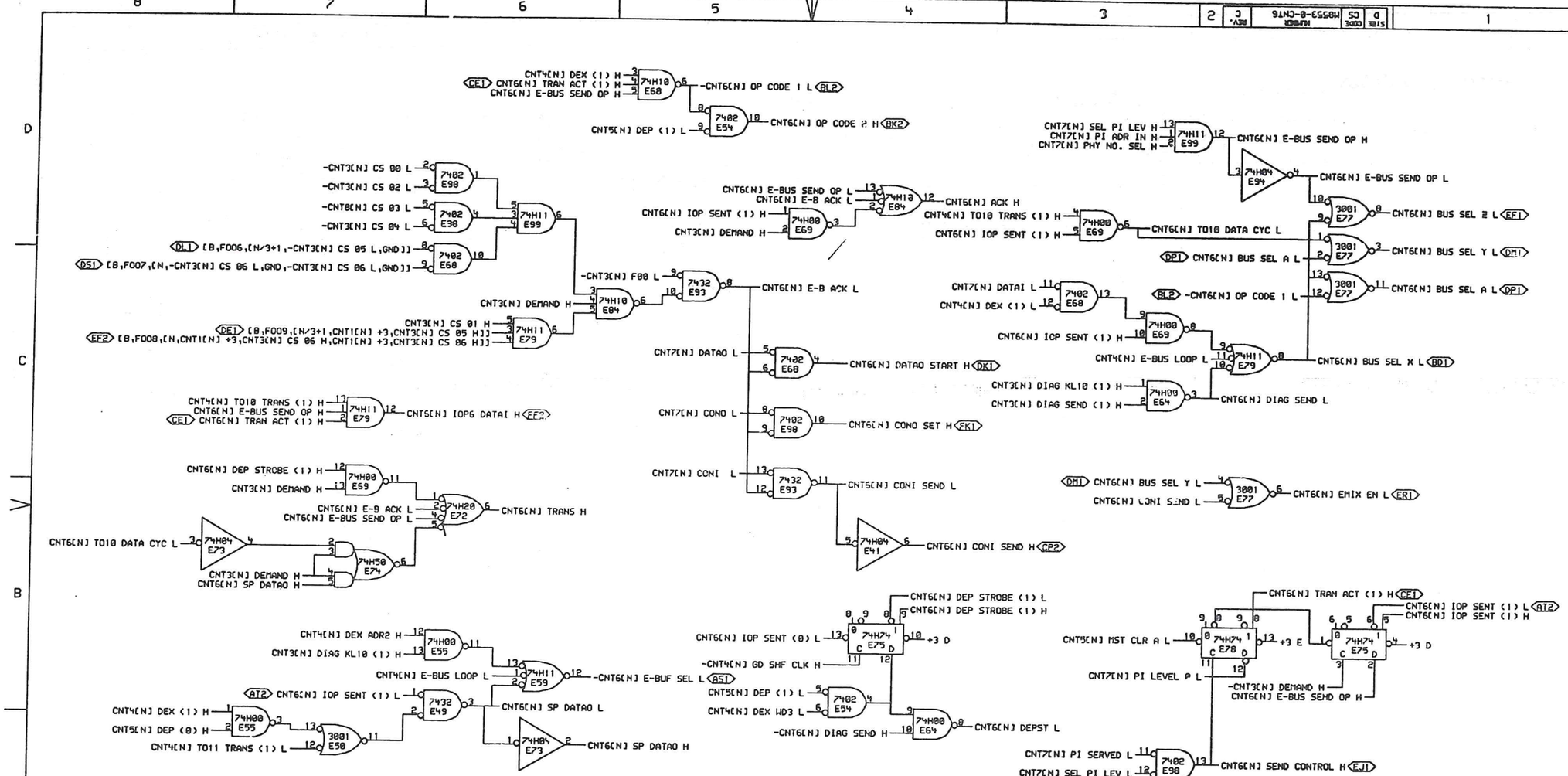

DTE SLOT LOCATIONS

TYPE	N=	SLOT
SINGLE	1	2AF04
MULTIPLE	1	2AF02
	2	2AF04
	3	2AF07
	4	2AF09

6 OF 9

"THIS DRAWING AND SPECIFICATIONS, HEREIN, ARE THE PROPERTY OF DIGITAL EQUIPMENT CORPORATION AND SHALL NOT BE REPRODUCED OR COPIED OR USED IN WHOLE OR IN PART AS THE BASIS FOR THE MANUFACTURE OR SALE OF ITEMS WITHOUT WRITTEN PERMISSION. COPYRIGHT © 1977, DIGITAL EQUIPMENT CORPORATION"

REVISIONS		
CHK	CHANGE NO.	REV

M8553-0-0013 C
W. BRUCKERT

digital

DRN. | DATE 10-FEB-77 | ENG. W. Bruckert | DATE 23 FEB 077
CH'G | DATE 2/11/77 | BOARD LOCATION: | SHEET 1 OF 1
CNT6EE.DRW[4,614] 09-FEB-77 13:41 | NEXT HIGHER ASSEMBLY: B-DD-M8553-0
FIRST USED ON OPTION/MODEL: KL10

TITLE: DTE20 CONTROL LOGIC

SIZE	CODE	NUMBER	REV.
D	CS	M8553-0-CNT6	C

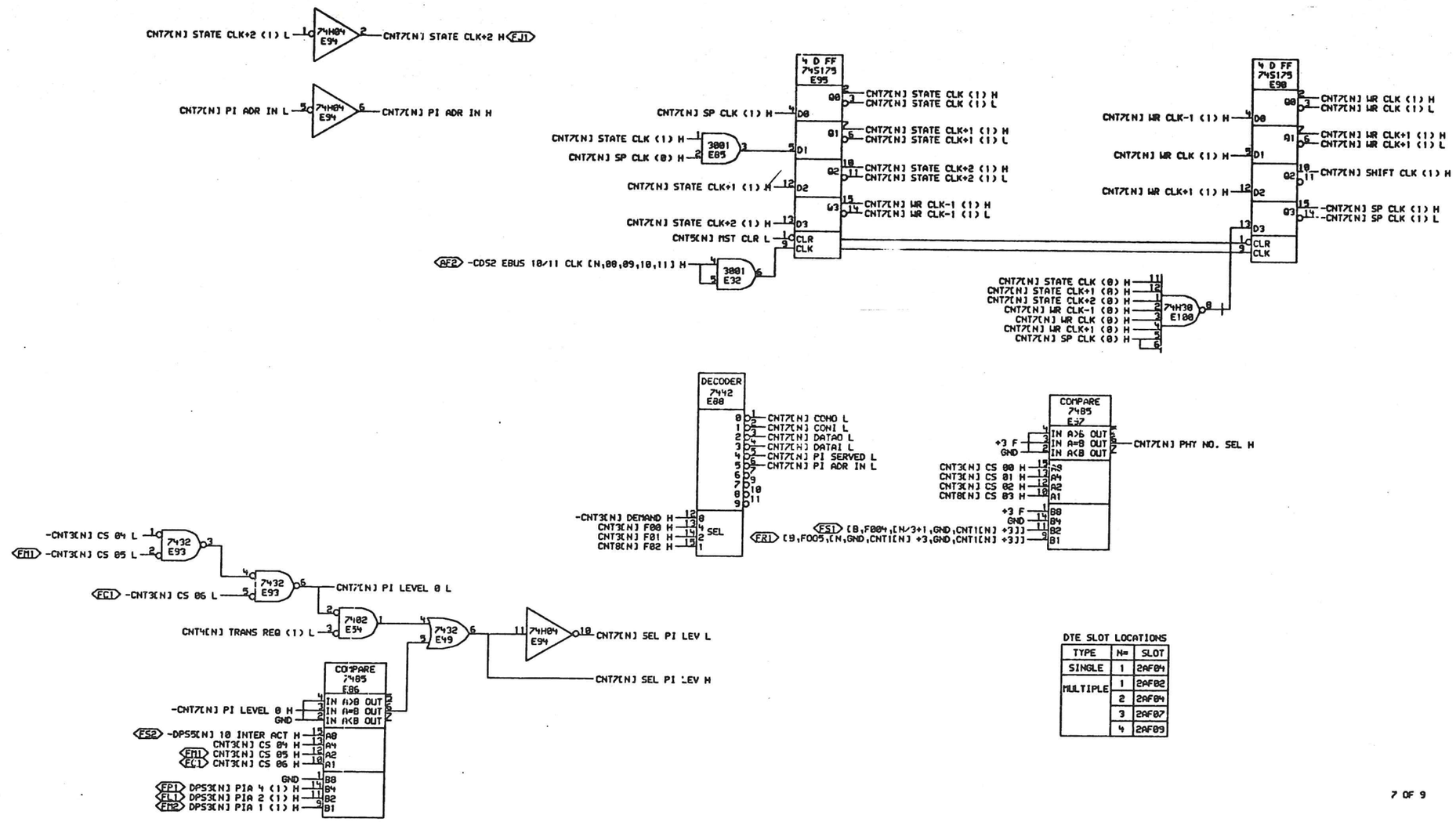

DTE SLOT LOCATIONS

TYPE	N=	SLOT
SINGLE	1	2AF04
MULTIPLE	1	2AF02
	2	2AF04
	3	2AF07
	4	2AF09

7 OF 9

"THIS DRAWING AND SPECIFICATIONS, HEREIN, ARE THE PROPERTY OF DIGITAL EQUIPMENT CORPORATION AND SHALL NOT BE REPRODUCED OR COPIED OR USED IN WHOLE OR IN PART AS THE BASIS FOR THE MANUFACTURE OR SALE OF ITEMS WITHOUT WRITTEN PERMISSION. COPYRIGHT © 1977, DIGITAL EQUIPMENT CORPORATION"

REVISIONS		
CHK	CHANGE NO.	REV

M8553-00008 B
M. BRUCKERT

digital

DRN. 10-FEB-77 CHKD. 3/11/77 APR. DATE 21FB77
CNT2SE.DRW(4,514) 09-FEB-77 13:41
BOARD LOCATION: SPARE
NEXT HIGHER ASSEMBLY: B-DD-M8553-0
FIRST USED ON OPTION/MODEL: KL10

TITLE: DTE20 CONTROL LOGIC

SIZE	CODE	NUMBER	REV.
D	CS	M8553-0-CNT7	B

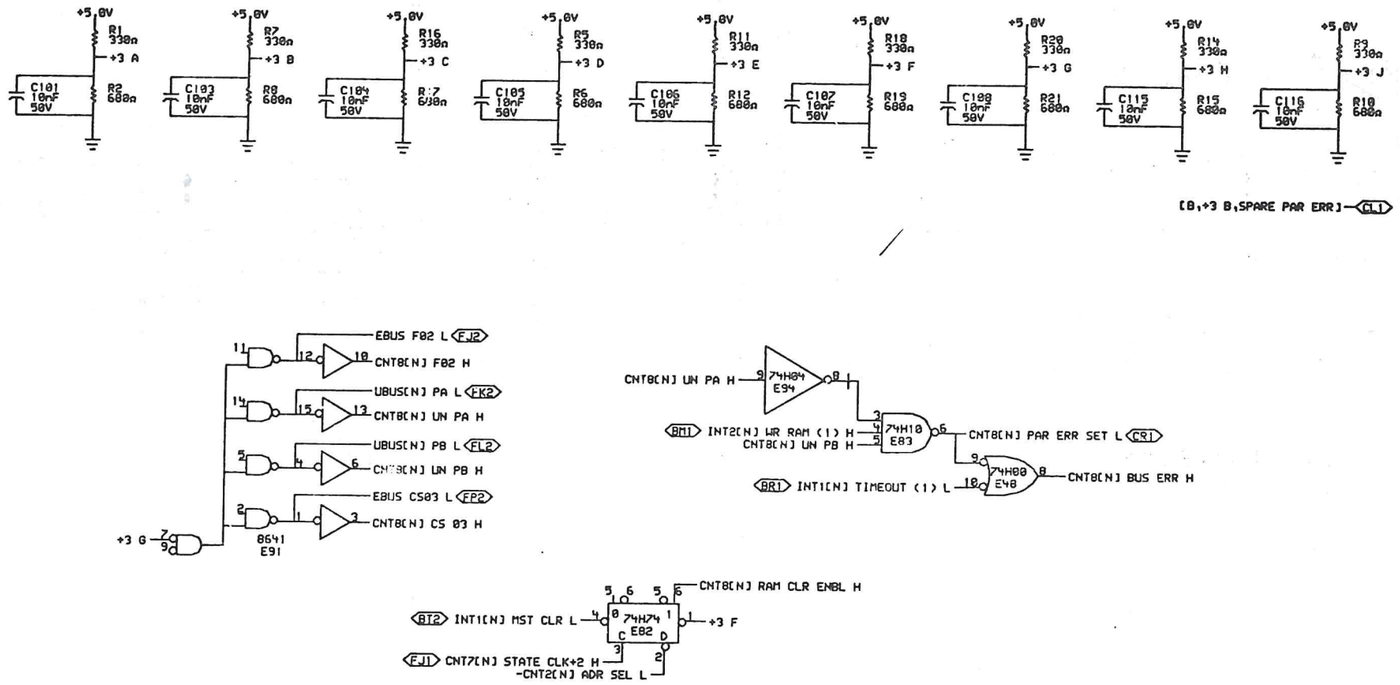

DTE SLOT LOCATIONS

TYPE	N=	SLOT
SINGLE	1	2AF04
MULTIPLE	1	2AF02
	2	2AF04
	3	2AF07
	4	2AF09

8 OF 9

THIS DRAWING AND SPECIFICATIONS, HEREIN, ARE THE PROPERTY OF DIGITAL EQUIPMENT CORPORATION AND SHALL NOT BE REPRODUCED OR COPIED OR USED IN WHOLE OR IN PART AS THE BASIS FOR THE MANUFACTURE OR SALE OF ITEMS WITHOUT WRITTEN PERMISSION. COPYRIGHT © 1977, DIGITAL EQUIPMENT CORPORATION

REVISIONS		
CHK	CHANGE NO.	REV

M8553-0-CNT8 D
W. BRUCKERT

digital

DRN. | DATE 19-FEB-77 | ENG. | DATE 25-FEB-77
CHK D | DATE | BOARD LOCATION: | SHEET 1 OF 1
CNT8EE.DRW[4,514] 03-FEB-77 13:41 | NEXT HIGHER ASSEMBLY:
FIRST USED ON OPTION/MODEL: KL10 | B-DD-M8553-0

TITLE: DTE20 CONTROL LOGIC

SIZE	CODE	NUMBER	REV.
D	CS	M8553-0-CNT8	D

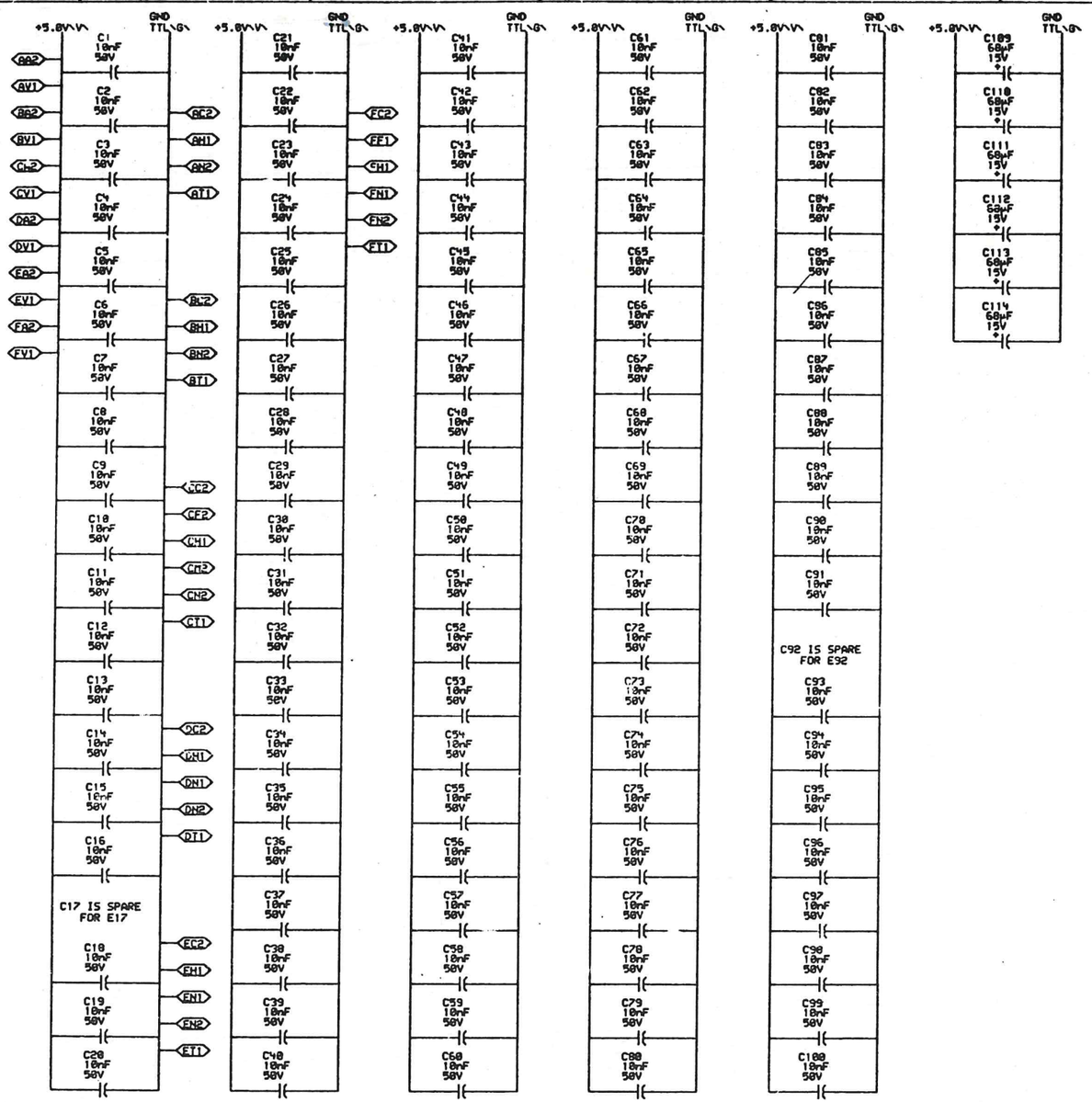

GND TTL\G\

AD2 — [B,NC(N,GND,CNT1(N] +3,CNT1(N] +3,GND)]

AE2 — SPARE ADR 00

DR1 — SPARE :ATA1 PAR ODD

EE1 — SPARE CAP DATA CLK

EL1 — SPARE ADR PAR ODD

EM1 — SPARE DATA PAR EVEN

— SPARE PIN1 M8553 B(N)\8400\ BE1

— SPARE PIN2 M8553 B(N)\8400\ BK1

— SPARE PIN3 M8553 B(N)\8400\ BN1

— SPARE PIN4 M8553 B(N)\8400\ CD1

— SPARE PIN5 M8553 B(N)\8400\ CK1

— SPARE PIN6 M8553 B(N)\8400\ CT2

— SPARE PIN7 M8553 B(N)\8400\ DM2

AB2 — [B,NC,GND TTL]

AW1 — [B,NC,GND TTL]

BB2 — [B,NC,GND TTL]

BW1 — [B,NC,GND TTL]

CB2 — [B,NC,GND TTL]

CW1 — [B,NC,GND TTL]

DB2 — [B,NC,GND TTL]

DW1 — [B,NC,GND TTL]

EB2 — [B,NC,GND TTL]

EW1 — [B,NC,GND TTL]

FB2 — [B,NC,GND TTL]

AB1 — [B,NC,GND TTL]

BB1 — [B,NC,GND TTL]

CB1 — [B,NC,GND TTL]

DB1 — [B,NC,GND TTL]

EB1 — [B,NC,GND TTL]

FB1 — [B,NC,GND TTL]

FW1 — [B,NC,-5.0V\V\]

DTE SLOT LOCATIONS

TYPE	N=	SLOT
SINGLE	1	2AF04
MULTIPLE	1	2AF02
	2	2AF04
	3	2AF07
	4	2AF09

9 OF 9

"THIS DRAWING AND SPECIFICATIONS, HEREIN, ARE THE PROPERTY OF DIGITAL EQUIPMENT CORPORATION AND SHALL NOT BE REPRODUCED OR COPIED OR USED IN WHOLE OR IN PART AS THE BASIS FOR THE MANUFACTURE OR SALE OF ITEMS WITHOUT WRITTEN PERMISSION. COPYRIGHT © 1977, DIGITAL EQUIPMENT CORPORATION"

REVISIONS		
CHK	CHANGE NO.	REV

digital

DRN. J. Tomsky DATE 07-JUN-77 ENG. DATE

CNTSCE.DRW(4,614) 02-JUN-77 06:34 DATE

FIRST USED ON OPTION/MODEL: KL10

BOARD LOCATION: SHEET 1 OF 1

NEXT HIGHER ASSEMBLY: B-DD-M8553-0

TITLE: DTE20 CNTRL LOGIC PWR, CAP, AND GND

SIZE	CODE	NUMBER	REV.
D	CS	M8553-0-CNT9	C

REVISION CONTROL SHEET

CUSTOMER PRINT SET	MFG SET	DRAWING NO	NO OF SHT	DESCRIPTION	OPTION NO/FILE DATE	REVISIONS						
				MODULE REVISION		A	B	C	D	E	F	H
		D-UA-M8554-Ø-Ø	5	11/1Ø BUS DATA CONTROL		-	A	B	C	D	E	F
		D-CS-M8554-Ø-INT1	1	DTE2Ø UNIBUS INTERRUPT CONTROL		-	A	B	C	D	E	E
		D-CS-M8554-Ø-INT2	1	UNIBUS INTERRUPT CONTROL		-	—	A	B	B	C	D
		D-CS-M8554-Ø-INT3	1	UNIBUS INTERRUPT POWER AND GND		-	A	B	B	B	C	C
		K-CO-M8554-Ø-4	1	11/1Ø BUS DATA CONTROL		B	B	B	B	B	B	B
		D-AH-M8554-Ø-5	4	11/1Ø BUS DATA CONTROL		A	A	B	B	B	B	B
		~~D-MH-M8554-Ø-6~~	~~1~~	~~MODULE ECO HISTORY~~		~~-~~	~~A~~	~~B~~	~~C~~	~~D~~	~~E~~	~~—~~
		5010513	-	ETCH CIRCUIT BOARD		B	B	B	B	B	B	B
		P00-M8554-ØØ		PROCESS SHEET (REF ONLY)		-	—	—	—	—	—	—
					ECO NO	ORIG.	00001	00002 HD 2-11-75	00003	00004	E.H.H. 18 JAN MR005	MR006

CUSTOMER PRINT SET CODES

X = PRINT OF DOCUMENT INCLUDED IN PRINT SET
C = INCLUDES ALL PRINTS INDICATED ON DOCUMENT
S = CONFIDENTIAL AUTHORIZED SIGNATURE REQUIRED

TITLE		SIZE	CODE	NUMBER	REV
11/1Ø BUS DATA CONTROL	SHEET 2 OF 2	B	DD	M8554-Ø	F

M1

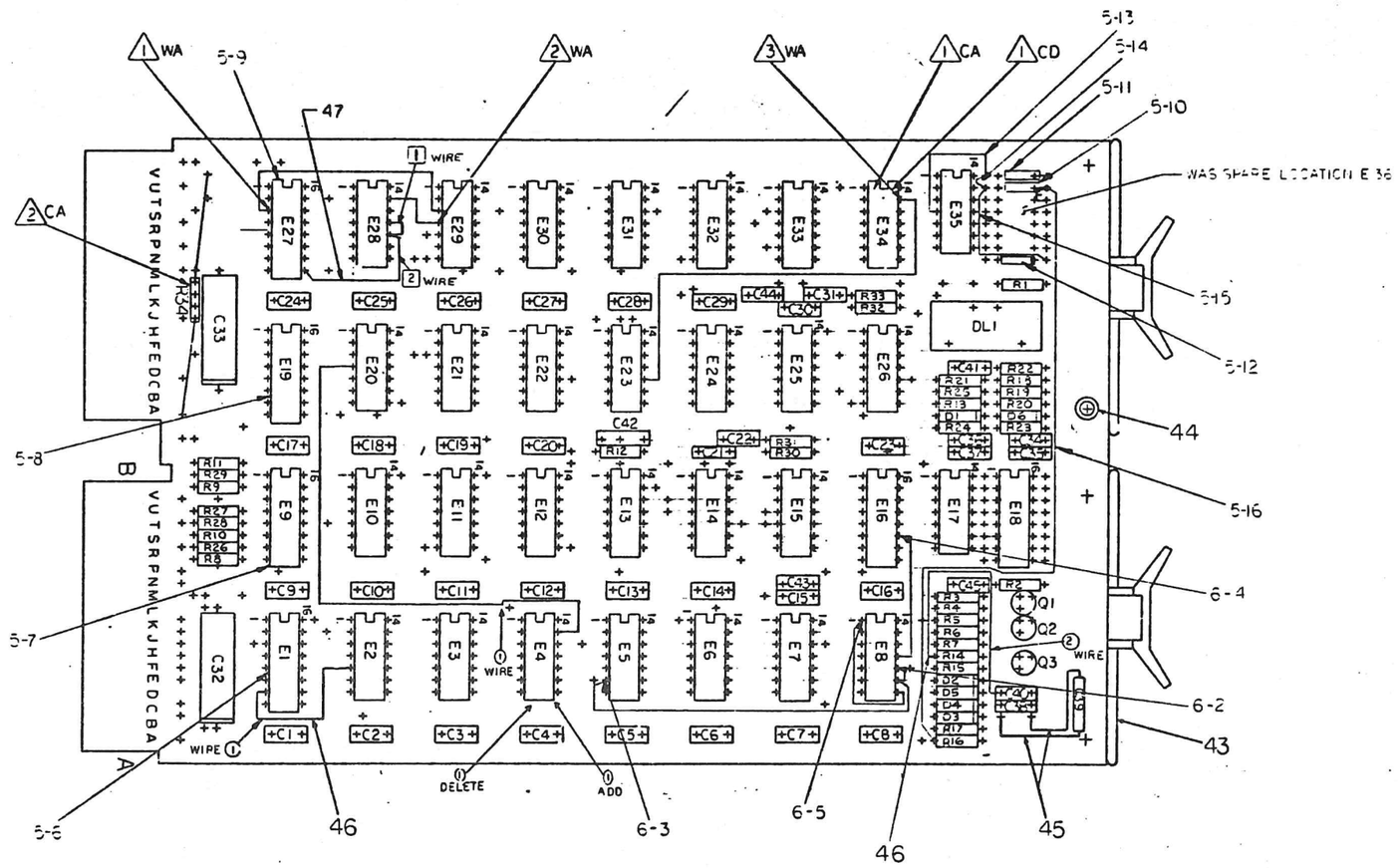

TITLE 11/10 BUS DATA CONTROL | D | UA | M8554-0-0

SCALE 2/1 | SHEET 2 OF 5

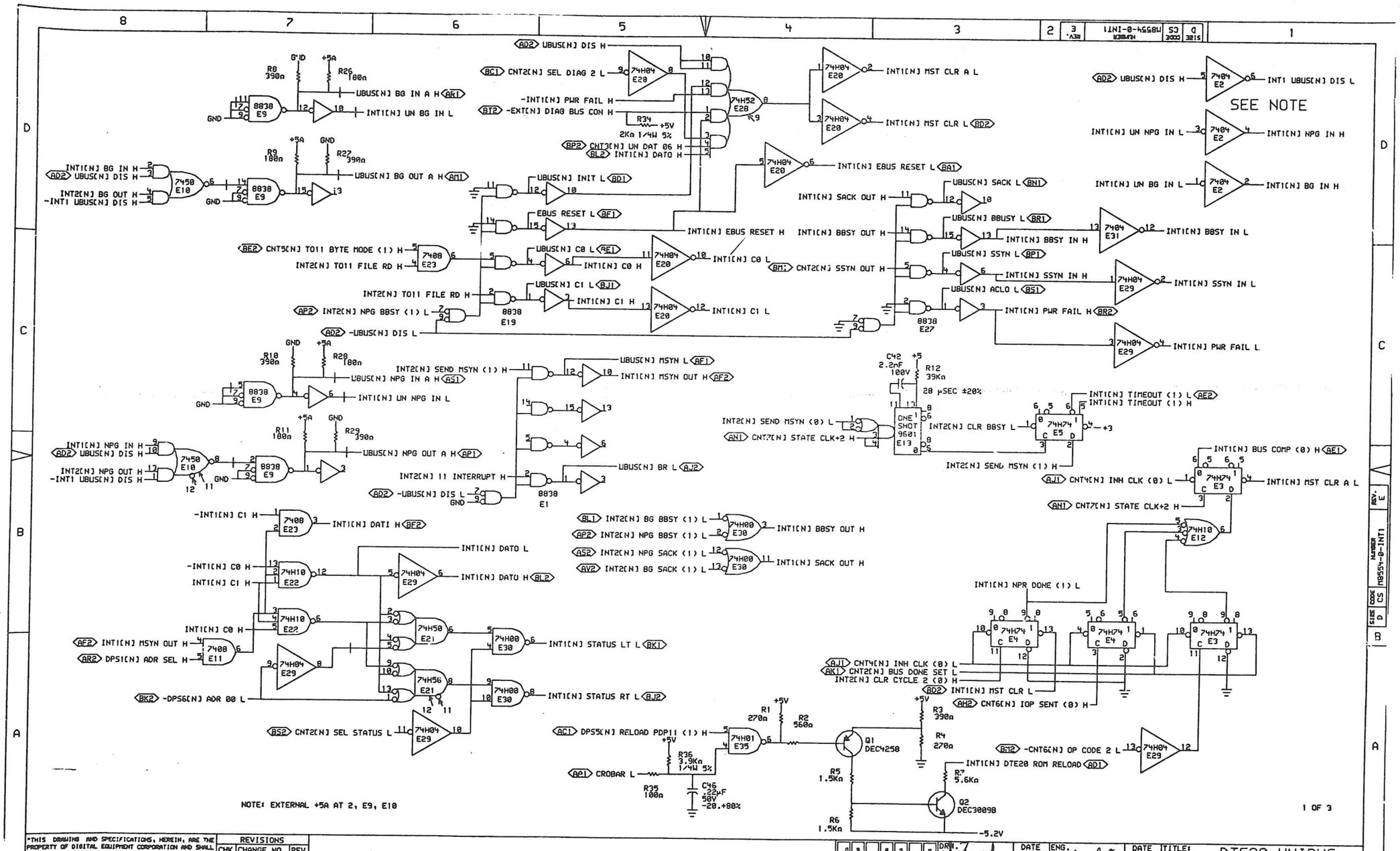

THIS DRAWING AND SPECIFICATIONS, HEREIN, ARE THE PROPERTY OF DIGITAL EQUIPMENT CORPORATION AND SHALL NOT BE REPRODUCED OR COPIED OR USED IN WHOLE OR IN PART AS THE BASIS FOR THE MANUFACTURE OR SALE OF ITEMS WITHOUT WRITTEN PERMISSION. COPYRIGHT © 1977, DIGITAL EQUIPMENT CORPORATION

REVISIONS		
CHK	CHANGE NO.	REV
	M8554-MACO3	E
	L BALES	

digital

DRN. D. Loosby DATE 04-NOV-77 ENG. W. Bruchet DATE 4-NOV-77
CHKD. DATE 4-NOV-77 BOARD LOCATION: SHEET 1 OF 1
INTIEX.DRW[4,615] 02-NOV-77 15:02 NEXT HIGHER ASSEMBLY: B-DD-M8554-0
FIRST USED ON OPTION/MODEL: KL10

TITLE: DTE20 UNIBUS INTERRUPT CONTROL

SIZE	CODE	NUMBER	REV.
D	CS	M8554-0-INT1	E

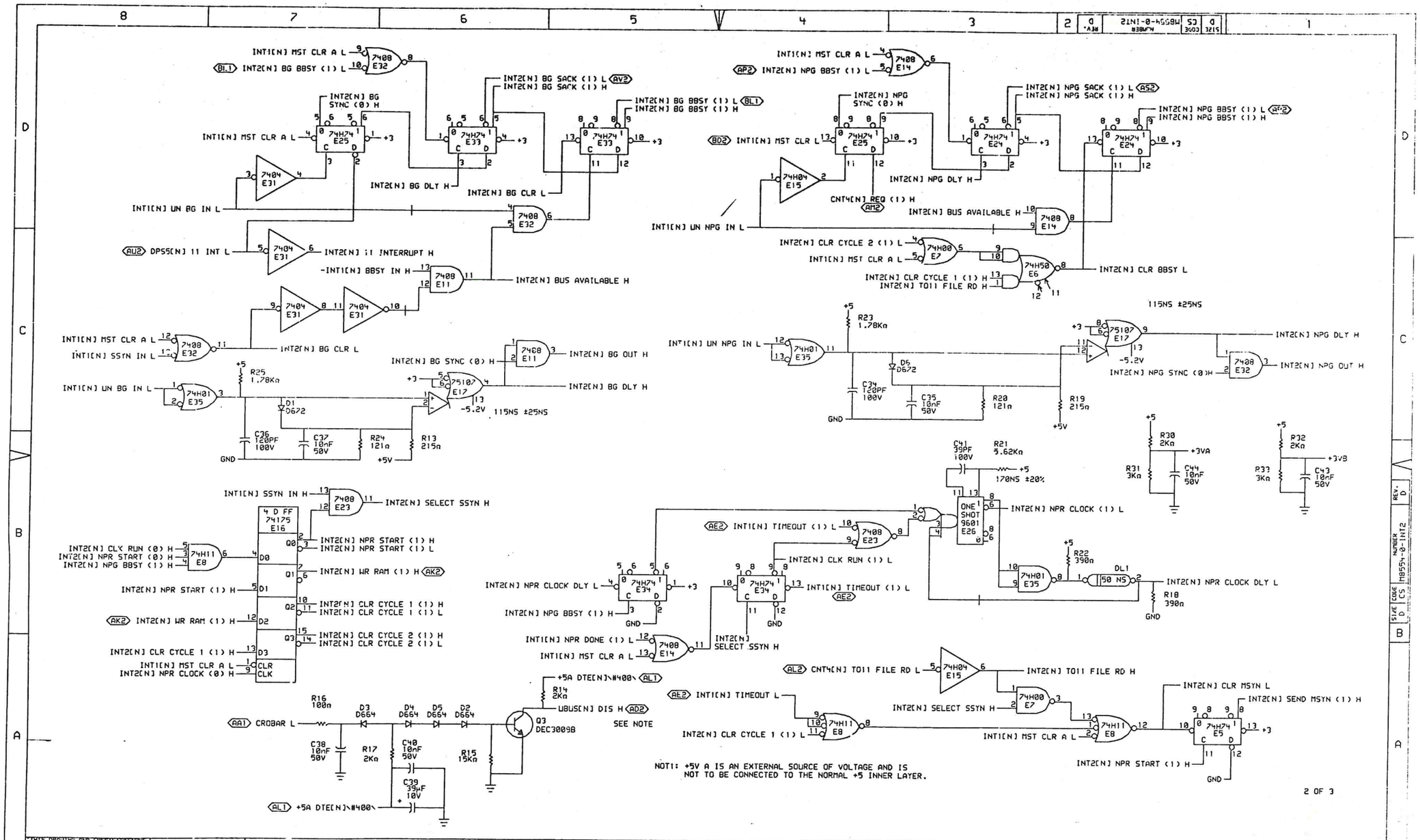

"THIS DRAWING AND SPECIFICATIONS, HEREIN, ARE THE PROPERTY OF DIGITAL EQUIPMENT CORPORATION AND SHALL NOT BE REPRODUCED OR COPIED OR USED IN WHOLE OR IN PART AS THE BASIS FOR THE MANUFACTURE OR SALE OF ITEMS WITHOUT WRITTEN PERMISSION. COPYRIGHT © 1984, DIGITAL EQUIPMENT CORPORATION"

REVISIONS		
CHK	CHANGE NO.	REV

digital

PS:<BOWEN>INT2EX.DRW 11-SEP-84 14:16

DRN.	DATE 11-SEP-84	ENG.	DATE
CHK'D	DATE	BOARD LOCATION:	
		SHEET 1 OF 1	
FIRST USED ON OPTION/MODEL: KL10		NEXT HIGHER ASSEMBLY: B-DD-M8554-0	

TITLE: UNIBUS INTERRUPT CONTROL

SIZE	CODE	NUMBER	REV.
D	CS	M8554-0-INT2	D

MRO 1

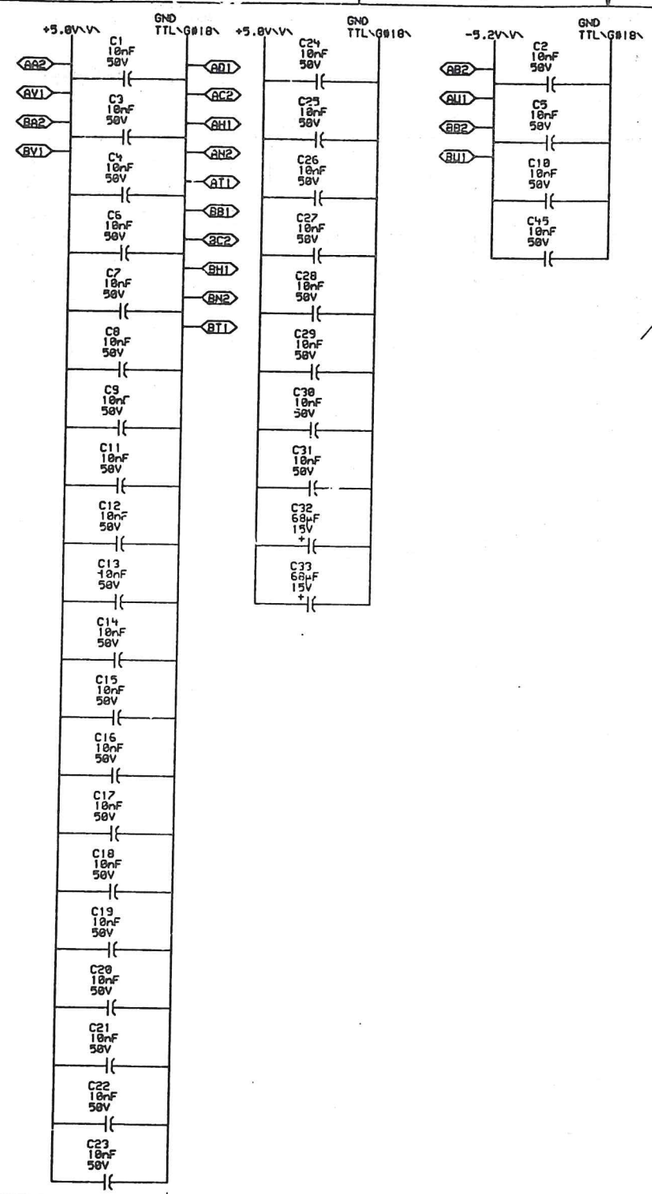

SPARE PIN1 M8554 @(N)<AT2>
SPARE PIN2 M8554 @(N)<BH2>
SPARE PIN3 M8554 @(N)<BU2>
SPARE PIN4 M8554 @(N)<BV2>

3 OF 3

"THIS DRAWING AND SPECIFICATIONS, HEREIN, ARE THE PROPERTY OF DIGITAL EQUIPMENT CORPORATION AND SHALL NOT BE REPRODUCED OR COPIED OR USED IN WHOLE OR IN PART AS THE BASIS FOR THE MANUFACTURE OR SALE OF ITEMS WITHOUT WRITTEN PERMISSION. COPYRIGHT © 1977, DIGITAL EQUIPMENT CORPORATION"

REVISIONS		
CHK	CHANGE NO.	REV
	M8554-M2	C
	L. HULL IN	
	L. BALES	
	1/26/78	

digital

DRN. S. Loomis DATE 31-OCT-77
CHK'D. DATE
ENG. DATE 1-NOV-77
BOARD LOCATION:
SHEET 1 OF 1
INTSEX.DRW[4,615] 31-OCT-77 11:39
NEXT HIGHER ASSEMBLY:
FIRST USED ON OPTION/MODEL: KL10 B-DD-M8554-0

TITLE: UNIBUS INTERRUPT POWER AND GROUND

SIZE	CODE	NUMBER	REV.
D	CS	M8554-0-INT3	C

REVISION CONTROL SHEET

CUSTOMER PRINT SET	MFG SET	DRAWING NO	NO OF SHT	DESCRIPTION	OPTION NO/FILE DATE	REVISIONS
				MODULE REVISION		A
		D-UA-M8559-Ø-Ø	1	I/O BOX CLOCK DISTRIBUTION		
		D-CS-M8559-Ø-CDS1	1	I/O BOX CLOCK DISTRIBUTION		-
		D-CS-M8559-Ø-CDS2	1	I/O BOX CLOCK DISTRIBUTION		-
		D-CS-M8559-Ø-CDS3	1	I/O BOX CLOCK DISTRIBUTION		-
		K-CO-M8559-Ø-4	1	I/O BOX CLOCK DISTRIBUTION (CALDEC DATA BASE)		B
		D-AH-M8559-Ø-5	5	I/O BOX CLOCK DISTRIBUTION		A
		B-MH-M8559-Ø-6	1	I/O BOX CLOCK DISTRIBUTION		-
		5010650	—	ETCH CIRCUIT BOARD		B
		P00-M8559-00		PROCESS SHEET (REF ONLY)		-

CUSTOMER PRINT SET CODES
X = PRINT OF DOCUMENT INCLUDED IN PRINT SET
C = INCLUDES ALL PRINTS INDICATED ON DOCUMENT
S = CONFIDENTIAL AUTHORIZED SIGNATURE REQUIRED

ECO NO
ORIG

TITLE		SIZE	CODE	NUMBER	REV
I/O BOX CLOCK DISTRIBUTION	SHEET 2 OF 2	B	DD	M8559-Ø	

"THIS DRAWING AND SPECIFICATIONS HEREIN ARE THE PROPERTY OF DIGITAL EQUIPMENT CORPORATION AND SHALL NOT BE REPRODUCED OR COPIED OR USED IN WHOLE OR IN PART AS THE BASIS FOR THE MANUFACTURE OR SALE OF ITEMS WITHOUT WRITTEN PERMISSION.
COPYRIGHT © 1974 DIGITAL EQUIPMENT CORPORATION"

NOTES:

1. FOR DRAWING DIRECTORY REFER TO: B-DD-M5559-0
2. UNLESS OTHERWISE SPECIFIED THE FOLLOWING PIN NUMBERS APPLY

PACKAGE TYPE	VCC	GND
16 PIN DIP	16	8
14 PIN DIP	14	7

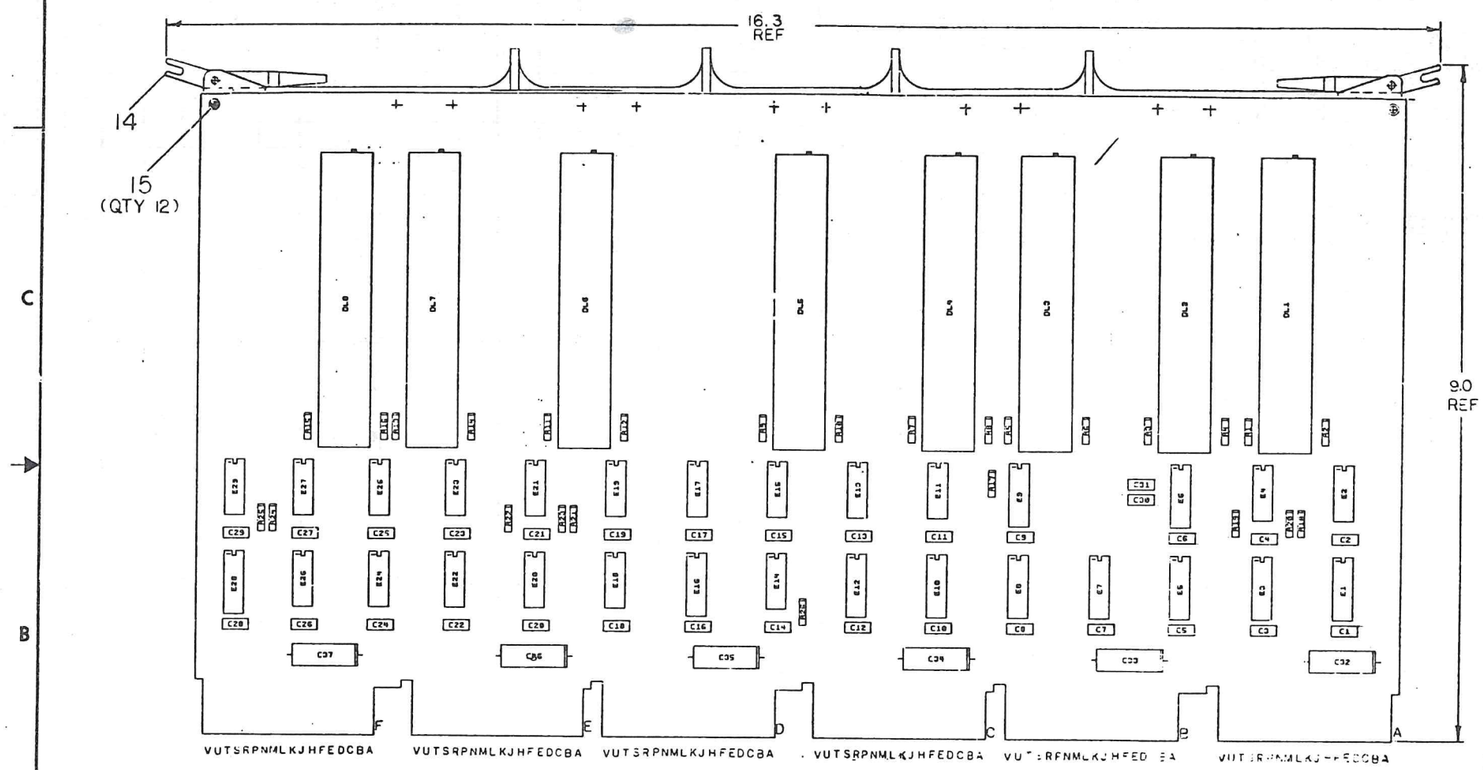

QTY	REF. DESIGNATION	DESCRIPTION	PART NO.	ITEM NO.
1		ETCHED CIRCUIT BOARD	5010650	1
8	C32 THRU C37	CAP 68UF 10, 15V TANT	1000092	2
31	C1 THRU C31	CAP 10NF 20% 100V DISC	1001610-00	3
16	R1 THRU R16	RES. 300 5% 1/8	1301425	4
10	R17 THRU R26	RES 39 5% 1/8	1302377	5
11	E1,E3,E5 THRU E10,E12,E16, E24	RES. PACK	1311003-1	6
8	DL1 THRU DL8	DELAY LINE 90NS	1610079	7
4	E2,E11,E15,E19	I.C. DEC 1074H40	1910469	8
1	E13	I.C. DEC 7402	1909004	9
4	E19,E20,E22,E24	I.C. DEC 1074H00	1910462	10
2	E14,E17	I.C. DEC 1074H30	1910469	11
3	E4,E21,E27	I.C. DEC 1074H11	1910465	12
4	E23,E25,E26,E28	I.C. DEC 7438	1911219	13
1		HANDLE ASSY.	1210711-2	14
12		EYELET, HANDLE	9006732	15
A/R		#30 AWG WIRE WRAP WIRE WHITE	9105740-99	16

PARTS LIST

FIRST USED ON OPTION MODEL: KL10

ETCH BOARD REV.

IC TYPE	GND	+5V
GND AND 5V ARE USUALLY PIN 7 AND 14 RESPECTIVELY EXCEPTIONS ARE STATED ABOVE		

IC PIN LOCATIONS

CHANGE NO.	REV.	DEC NO	EIA NO.	DEC NO.	EIA NO.

REVISIONS — CHK

SEMICONDUCTOR CONVERSION CHART

DRN. — DATE 7/12/74
CHK'D. — DATE 7/15/74
ENG. — DATE 7/15/74
PROJ. ENG. — DATE 7/23/74
PROD. — DATE 7/23/74

NEXT HIGHER ASSY: B-DD-M5559-0

SCALE: NONE

SHEET 1 OF 1

digital

TITLE: I/O BOX CLOCK DISTRIBUTION

SIZE D | CODE UA | NUMBER M5559-0-0 | REV.

DIST.

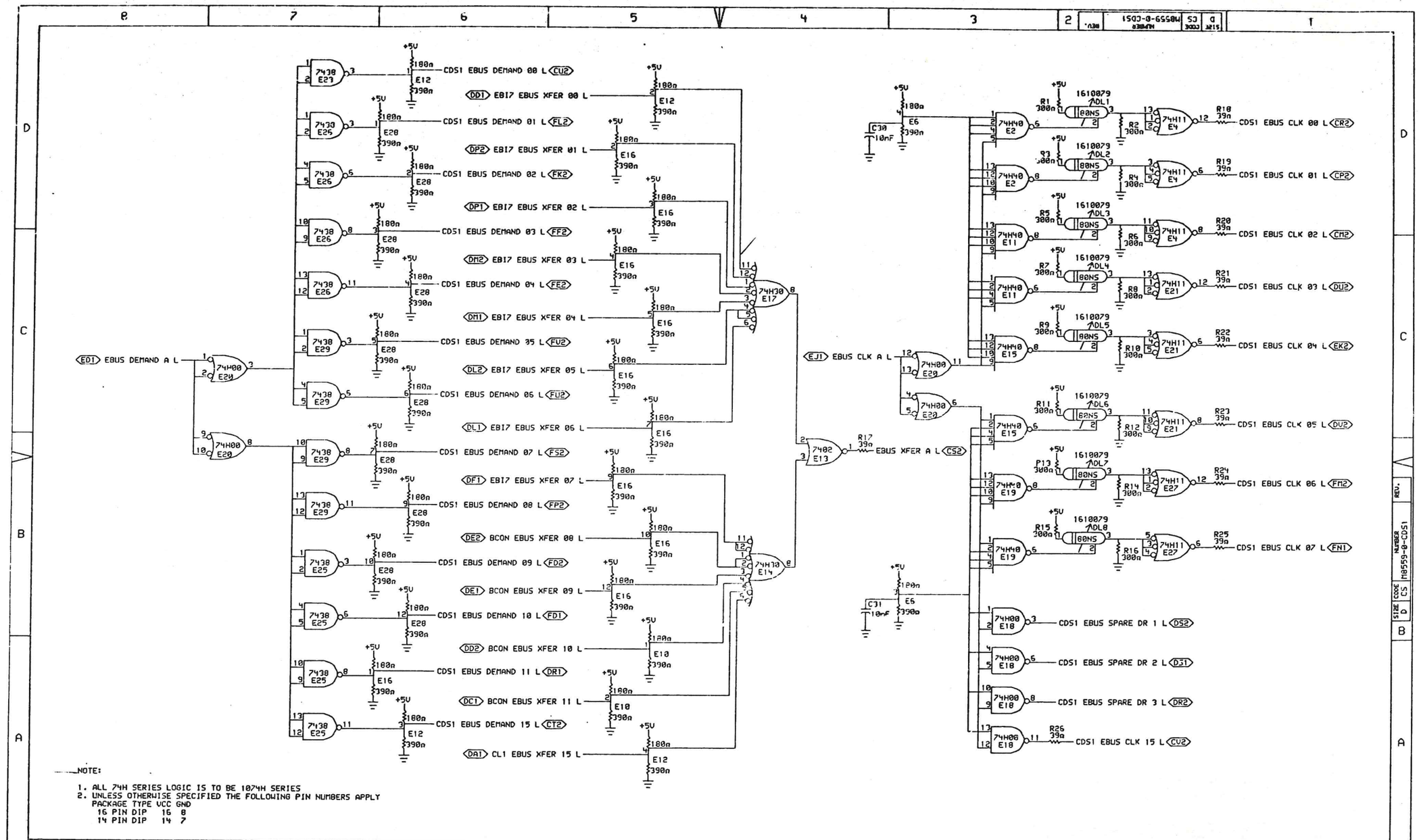

NOTE:

1. ALL 74H SERIES LOGIC IS TO BE 1074H SERIES
2. UNLESS OTHERWISE SPECIFIED THE FOLLOWING PIN NUMBERS APPLY

PACKAGE TYPE	VCC	GND
16 PIN DIP	16	8
14 PIN DIP	14	7

"THIS DRAWING AND SPECIFICATIONS, HEREIN, ARE THE PROPERTY OF DIGITAL EQUIPMENT CORPORATION AND SHALL NOT BE REPRODUCED OR COPIED OR USED IN WHOLE OR IN PART AS THE BASIS FOR THE MANUFACTURE OR SALE OF ITEMS WITHOUT WRITTEN PERMISSION.
COPYRIGHT © 1974, DIGITAL EQUIPMENT CORPORATION"

REVISIONS		
CHK	CHANGE NO.	REV

digital

DRN. | DATE | ENG. | DATE 9/13/74
CHK'D. | DATE | BOARD LOCATION: | SHEET 1 OF 1
COSTE[10,426] 18-SEP-74 13:05 | NEXT HIGHER ASSEMBLY: B-DD-M8559-0
FIRST USED ON OPTION/MODEL: KL10

TITLE: I/O BOX CLOCK DISTRIBUTION

SIZE	CODE	NUMBER	REV.
D	CS	M8559-0-CDS1	

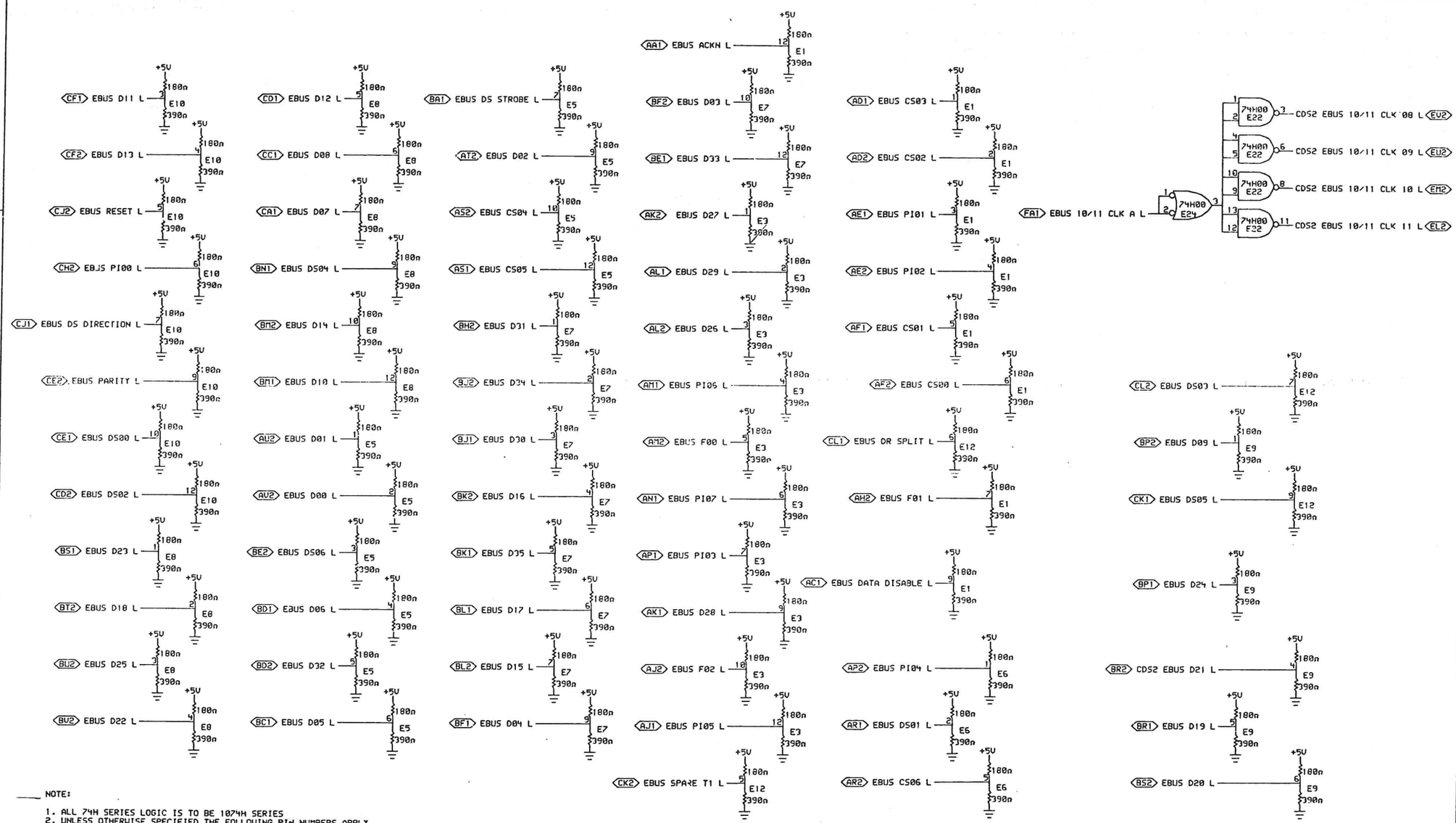

NOTE:

1. ALL 74H SERIES LOGIC IS TO BE 1074H SERIES
2. UNLESS OTHERWISE SPECIFIED THE FOLLOWING PIN NUMBERS APPLY

PACKAGE TYPE	VCC	GND
16 PIN DIP	16	8
14 PIN DIP	14	7

"THIS DRAWING AND SPECIFICATIONS, HEREIN, ARE THE PROPERTY OF DIGITAL EQUIPMENT CORPORATION AND SHALL NOT BE REPRODUCED OR COPIED OR USED IN WHOLE OR IN PART AS THE BASIS FOR THE MANUFACTURE OR SALE OF ITEMS WITHOUT WRITTEN PERMISSION.
COPYRIGHT © 1974, DIGITAL EQUIPMENT CORPORATION"

REVISIONS		
CHK	CHANGE NO.	REV

digital

CDS2EC(10,426) 08-SEP-74 00:53

DRN D. M. P. DATE
CHK'D J. Smith DATE
ENG William M. Bell 9/13/74 DATE
BOARD LOCATION:
SHEET 1 OF 1
NEXT HIGHER ASSEMBLY: B-DD-M8559-0
FIRST USED ON OPTION/MODEL: KL10

TITLE: I/O BOX CLOCK DISTRIBUTION

SIZE	CODE	NUMBER	REV.
D	CS	M8559-0-CDS2	

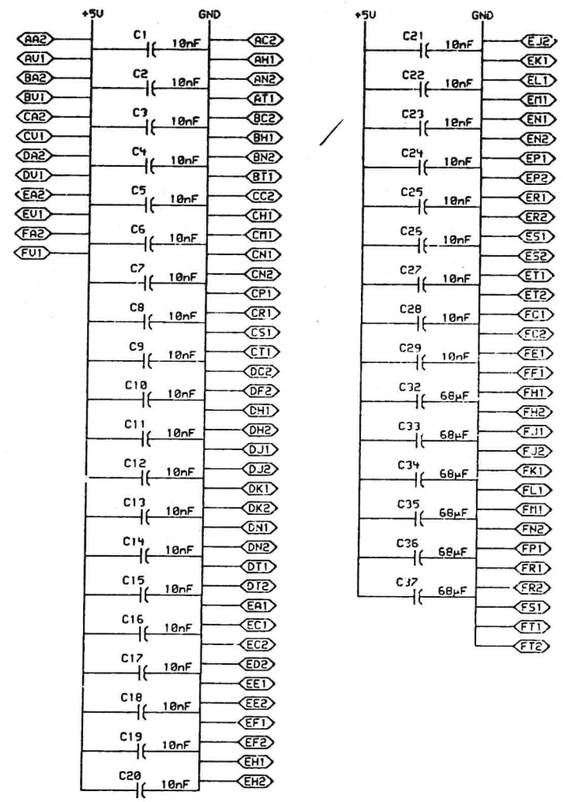

"THIS DRAWING AND SPECIFICATIONS, HEREIN, ARE THE PROPERTY OF DIGITAL EQUIPMENT CORPORATION AND SHALL NOT BE REPRODUCED OR COPIED OR USED IN WHOLE OR IN PART AS THE BASIS FOR THE MANUFACTURE OR SALE OF ITEMS WITHOUT WRITTEN PERMISSION.
COPYRIGHT © 1974, DIGITAL EQUIPMENT CORPORATION"

REVISIONS		
CHK	CHANGE NO.	REV

digital

DRN. G Smith DATE 13-SEP-74
CHK G Smith DATE 13-SEP-74
ENG. DATE
BOARD LOCATION:
SHEET 1 OF 1
CDS3E(4,426) 13-SEP-74 16:02
NEXT HIGHER ASSEMBLY:
FIRST USED ON OPTION/MODEL: KL10 B-DD-M8559-0

TITLE: I/O BOX CLOCK DISTRIBUTION

SIZE	CODE	NUMBER	REV.
D	CS	M8559-0-CDS3	

AA1	UBUS[N] INIT L\S\
AA2	[N/3+1,GND 2HJ4-8\G\,GND 2KL4-8\G\]
AB1	UBUS[N] INTR L\S\
AB2	[N/3+1,GND 2HJ4-8\G\,GND 2KL4-8\G\]
AC1	UBUS[N] D00 L\S\
AC2	[N/3+1,GND 2HJ4-8\G\,GND 2KL4-8\G\]
AD1	UBUS[N] D02 L\S\
AD2	UBUS[N] D01 L\S\
AE1	UBUS[N] D04 L\S\
AE2	UBUS[N] D03 L\S\
AF1	UBUS[N] D06 L\S\
AF2	UBUS[N] D05 L\S\
AH1	UBUS[N] D08 L\S\
AH2	UBUS[N] D07 L\S\
AJ1	UBUS[N] D10 L\S\
AJ2	UBUS[N] D09 L\S\
AK1	UBUS[N] D12 L\S\
AK2	UBUS[N] D11 L\S\
AL1	UBUS[N] D14 L\S\
AL2	UBUS[N] D13 L\S\
AM1	UBUS[N] PA L\S\
AM2	UBUS[N] D15 L\S\
AN1	[N/3+1,GND 2HJ4-8\G\,GND 2KL4-8\G\]
AN2	UBUS[N] PB L\S\
AP1	[N/3+1,GND 2HJ4-8\G\,GND 2KL4-8\G\]
AP2	UBUS[N] BBUSY L\S\
AR1	[N/3+1,GND 2HJ4-8\G\,GND 2KL4-8\G\]
AR2	UBUS[N] SACK L\S\
AS1	[N/3+1,GND 2HJ4-8\G\,GND 2KL4-8\G\]
AS2	UBUS[N] NPR L\S\
AT1	[N/3+1,GND 2HJ4-8\G\,GND 2KL4-8\G\]
AT2	UBUS[N] BR 7 L\S\
AU1	UBUS[N] NPG IN H\S\
AU2	UBUS[N] BR 6 L\S\
AV1	UBUS[N] BG 7 IN H\S\
AV2	[N/3+1,GND 2HJ4-8\G\,GND 2KL4-8\G\]

BA1	UBUS[N] BG 6 IN H\S\
BA2	[N/3+1,GND 2HJ4-8\G\,GND 2KL4-8\G\]
BB1	UBUS[N] BG 5 IN H\S\
BB2	[N/3+1,GND 2HJ4-8\G\,GND 2KL4-8\G\]
BC1	UBUS[N] BR 5 L\S\
BC2	[N/3+1,GND 2HJ4-8\G\,GND 2KL4-8\G\]
BD1	[N/3+1,GND 2HJ4-8\G\,GND 2KL4-8\G\]
BD2	UBUS[N] BR 4 L\S\
BE1	[N/3+1,GND 2HJ4-8\G\,GND 2KL4-8\G\]
BE2	UBUS[N] BG 4 IN H\S\
BF1	UBUS[N] ACLO L\S\
BF2	UBUS[N] DCLO L\S\
BH1	UBUS[N] A01 L\S\
BH2	UBUS[N] A00 L\S\
BJ1	UBUS[N] A03 L\S\
BJ2	UBUS[N] A02 L\S\
BK1	UBUS[N] A05 L\S\
BK2	UBUS[N] A04 L\S\
BL1	UBUS[N] A07 L\S\
BL2	UBUS[N] A06 L\S\
BM1	UBUS[N] A09 L\S\
BM2	UBUS[N] A08 L\S\
BN1	UBUS[N] A11 L\S\
BN2	UBUS[N] A10 L\S\
BP1	UBUS[N] A13 L\S\
BP2	UBUS[N] A12 L\S\
BR1	UBUS[N] A15 L\S\
BR2	UBUS[N] A14 L\S\
BS1	UBUS[N] A17 L\S\
BS2	UBUS[N] A16 L\S\
BT1	[N/3+1,GND 2HJ4-8\G\,GND 2KL4-8\G\]
BT2	UBUS[N] C1 L\S\
BU1	UBUS[N] SSYN L\S\
BU2	UBUS[N] C0 L\S\
BV1	UBUS[N] MSYN L\S\
BV2	[N/3+1,GND 2HJ4-8\G\,GND 2KL4-8\G\]

"THIS DRAWING AND SPECIFICATIONS, HEREIN, ARE THE PROPERTY OF DIGITAL EQUIPMENT CORPORATION AND SHALL NOT BE REPRODUCED OR COPIED OR USED IN WHOLE OR IN PART AS THE BASIS FOR THE MANUFACTURE OR SALE OF ITEMS WITHOUT WRITTEN PERMISSION.
COPYRIGHT © 1976, DIGITAL EQUIPMENT CORPORATION"

REVISIONS		
CHK	CHANGE NO.	REV

digital

DRN. G. Loosley DATE 02-MAR-76 ENG. DATE 25-MAR-76
CHK W. Dickinson DATE 2/6/76 BOARD LOCATION: SHEET 1 OF 1

UBCI.DRW(4,426) 27-FEB-76 10:42 NEXT HIGHER ASSEMBLY.
FIRST USED ON OPTION/MODEL: KL10 B-DD-KL10-C

TITLE: UNIBUS CABLE IN

SIZE	CODE	NUMBER	REV.
D	CS	KL10-C-UBCI	

AA1	UBUS[N] INIT L\C\
AA2	[N/3+1,GND 2 N-8\G\,GND 2KL4-8\G\]
AB1	UBUS[N] INTR L\C\
AB2	[N/3+1,GND 2HJ4-8\G\,GND 2KL4-8\G\]
AC1	UBUS[N] D00 L\C\
AC2	[N/3+1,GND 2HJ4-8\G\,GND 2KL4-8\G\]
AD1	UBUS[N] D02 L\C\
AD2	UBUS[N] D01 L\C\
AE1	UBUS[N] D04 L\C\
AE2	UBUS[N] D03 L\C\
AF1	UBUS[N] D06 L\C\
AF2	UBUS[N] D05 L\C\
AH1	UBUS[N] D08 L\C\
AH2	UBUS[N] D07 L\C\
AJ1	UBUS[N] D10 L\C\
AJ2	UBUS[N] D09 L\C\
AK1	UBUS[N] D12 L\C\
AK2	UBUS[N] D11 L\C\
AL1	UBUS[N] D14 L\C\
AL2	UBUS[N] D13 L\C\
AM1	UBUS[N] PA L\C\
AM2	UBUS[N] D15 L\C\
AN1	[N/3+1,GND 2HJ4-8\G\,GND 2KL4-8\G\]
AN2	UBUS[N] PB L\C\
AP1	[N/3+1,GND 2HJ4-8\G\,GND 2KL4-8\G\]
AP2	UBUS[N] BBUSY L\C\
AR1	[N/3+1,GND 2HJ4-8\G\,GND 2KL4-8\G\]
AR2	UBUS[N] SACK L\C\
AS1	[N/3+1,GND 2HJ4-8\G\,GND 2KL4-8\G\]
AS2	UBUS[N] NPR L\C\
AT1	[N/3+1,GND 2HJ4-8\G\,GND 2KL4-8\G\]
AT2	UBUS[N] BR 7 L\C\
AU1	UBUS[N] NPG OUT H\C\
AU2	UBUS[N] BR 6 L\C\
AV1	UBUS[N] BG 7 OUT H\C\
AV2	[N/3+1,GND 2HJ4-8\G\,GND 2KL4-8\G\]

BA1	UBUS[N] BG 6 OUT H\C\
BA2	[N/3+1,GND 2HJ4-8\G\,GND 2KL4-8\G\]
BB1	UBUS[N] BG 5 OUT H\C\
BB2	[N/3+1,GND 2HJ4-8\G\,GND 2KL4-8\G\]
BC1	UBUS[N] BR 5 L\C\
BC2	[N/3+1,GND 2HJ4-8\G\,GND 2KL4-8\G\]
BD1	[N/3+1,GND 2HJ4-8\G\,GND 2KL4-8\G\]
BD2	UBUS[N] BR 4 L\C\
BE1	[N/3+1,GND 2HJ4-8\G\,GND 2KL4-8\G\]
BE2	UBUS[N] BG 4 OUT H\C\
BF1	UBUS[N] ACLO L\C\
BF2	UBUS[N] DCLO L\C\
BH1	UBUS[N] A01 L\C\
BH2	UBUS[N] A00 L\C\
BJ1	UBUS[N] A03 L\C\
BJ2	UBUS[N] A02 L\C\
BK1	UBUS[N] A05 L\C\
BK2	UBUS[N] A04 L\C\
BL1	UBUS[N] A07 L\C\
BL2	UBUS[N] A06 L\C\
BM1	UBUS[N] A09 L\C\
BM2	UBUS[N] A08 L\C\
BN1	UBUS[N] A11 L\C\
BN2	UBUS[N] A10 L\C\
BP1	UBUS[N] A13 L\C\
BP2	UBUS[N] A12 L\C\
BR1	UBUS[N] A15 L\C\
BR2	UBUS[N] A14 L\C\
BS1	UBUS[N] A17 L\C\
BS2	UBUS[N] A16 L\C\
BT1	[N/3+1,GND 2HJ4-8\G\,GND 2KL4-8\G\]
BT2	UBUS[N] C1 L\C\
BU1	UBUS[N] SSYN L\C\
BU2	UBUS[N] C0 L\C\
BV1	UBUS[N] MSYN L\C\
BV2	[N/3+1,GND 2HJ4-8\G\,GND 2KL4-8\G\]

"THIS DRAWING AND SPECIFICATIONS, HEREIN, ARE THE PROPERTY OF DIGITAL EQUIPMENT CORPORATION AND SHALL NOT BE REPRODUCED OR COPIED OR USED IN WHOLE OR IN PART AS THE BASIS FOR THE MANUFACTURE OR SALE OF ITEMS WITHOUT WRITTEN PERMISSION.
COPYRIGHT © 1976, DIGITAL EQUIPMENT CORPORATION"

REVISIONS		
CHK	CHANGE NO.	REV

digital

DRWN: D. Toomey DATE 02-MAR-76
CHK'D: W. Stephenson DATE 3/1/76
ENG. DATE
BOAR LOCATION:
SHEET 1 OF 1
UBCO.DRW[4,426] 02-MAR-76 09:10
NEXT HIGHER ASSEMBLY:
FIRST USED ON OPTION/MODEL: KL10 B-DD-KL10-C

TITLE: UNIBUS CABLE OUT

SIZE	CODE	NUMBER	REV.
D	CS	KL10-C-UBCO	

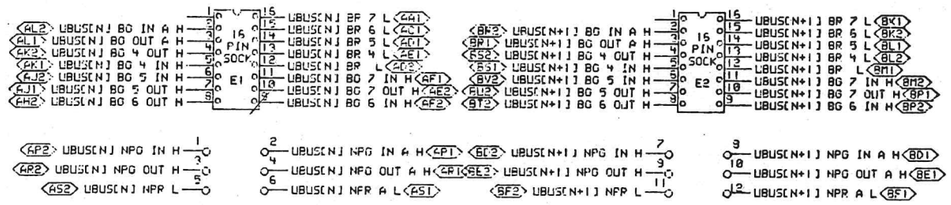

DTE NPR NPR ENABLED (NORMAL SETUP) JUMPER	DTE NPR NPR DISABLED JUMPER
LUG 1 TO LUG 2	LUG 1 TO LUG 3
LUG 3 TO LUG 4	LUG 5 OPEN
LUG 5 TO LUG 6	

DTE NPR NPR ENABLED (NORMAL SETUP) JUMPER	DTE NPR NPR DISABLED JUMPER
LUG 7 TO LUG 8	LUG 7 TO LUG 9
LUG 9 TO LUG 10	LUG 11 OPEN
LUG 11 TO LUG 12	

II INT LEVEL DESIRED	PART NUMBER (INSERT IN E1)
4	5408776
5	5408778
6	5408780
7	5408782

;NOTES:

1. THESE SWITCHES ARE LOCATED ON THE MASTER INTERRUPT SWITCH BOARD 5411360 OR 5411360YA
2. IN 1080 CONFIGURATIONS, THE 5411360YA IS USED.
3. THE 5411360YA HAS S2 ONLY. THE 5411360 HAS S1,S2,S3,S4.

"THIS DRAWING AND SPECIFICATIONS, HEREIN, ARE THE PROPERTY OF DIGITAL EQUIPMENT CORPORATION AND SHALL NOT BE REPRODUCED OR COPIED OR USED IN WHOLE OR IN PART AS THE BASIS FOR THE MANUFACTURE OR SALE OF ITEMS WITHOUT WRITTEN PERMISSION. COPYRIGHT © 1974, DIGITAL EQUIPMENT CORPORATION"

REVISIONS		
CHK	CHANGE NO.	REV

DRN: DATE 12-23-74 ENG: DATE 12/27/74
CHK'D: DATE 12-27-74 BOARD LOCATION: SHEET 1 OF 1
SWITCH,425 12-DEC-74 13:37 NEXT HIGHER ASSEMBLY: B-DD-M8564-0
FIRST USED ON OPTION/MODEL: KL10

TITLE: DTE20 INTERRUPT JUMPER

SIZE	CODE	NUMBER	REV.
D	CS	M8564-0-INTJ	

"THIS DRAWING AND SPECIFICATIONS, HEREIN, ARE THE PROPERTY OF DIGITAL EQUIPMENT CORPORATION AND SHALL NOT BE REPRODUCED OR COPIED OR USED IN WHOLE OR IN PART AS THE BASIS FOR THE MANUFACTURE OR SALE OF ITEMS WITHOUT WRITTEN PERMISSION. COPYRIGHT © 1975 DIGITAL EQUIPMENT CORPORATION"

	1	2	3	4	5	6	7	8	9	10	11	12	13	14	15	16
A	BC20C															BCIIA
B	(M9006)															(M929)
C	BC20C	M8563	M8560	M8558	M8558	M8558	M8558	M8558	M8558	M8558	M8558	SPARE	M8550	M8550	M8551	BCIIA
D	(M9006)															(M929)
E	SPARE															SPARE
F																

FIRST USED ON OPTION/MODEL	QTY.	DESCRIPTION	PART NO.	ITEM NO.
KLIØ		PARTS LIST		

DIMENSIONAL TOLERANCE

DIMENSIONS ARE MILLIMETERS / INCHES UNLESS OTHERWISE SPECIFIED

MILLIMETERS	INCHES	ANGLES
X,XX = ±0,10	.XXX = ±.005	±0° 30'
X,X = ±0,5	.XX = ±.02	
X = ±2,	.X = ±.1	

THIRD ANGLE PROJECTION

REMOVE BURRS AND BREAK SHARP CORNERS SURFACE QUALITY ✓

MATERIAL —//—

FINISH —//—

		DATE
DRN.		6-5-75
CHK'D		6-5-75
ENG.		6-5-75
PROJ. ENG.		6/12/75
PROD.		6/12/75

NEXT HIGHER ASSY. D-UA-KLIØ-Ø-Ø

SCALE —//—

SHEET 1 OF 1

digital

TITLE MODULE UTILIZATION BAY 1

SIZE	CODE	NUMBER	REV.
C	MU	KLIØ-Ø-BAY1	

DIST.

REVISIONS: REV. | CHANGE NO. | CHK.

DEC FORM NO. DRC 1911-6

SIZE C CODE MU NUMBER KLIØ-Ø-BAY1 REV.

REVISION CONTROL SHEET

CUSTOMER PRINT SET	MFG SET	DRAWING NO	NO OF SHT	DESCRIPTION	OPTION NO/FILE DATE	REVISIONS				
			-	MODULE REVISION		A	B		B	
		D-UA-M8550-0-0	8	DATA PATH BOARD		-	A		A1	
		D-CS-M8550-0-DLH1	1	IBUS ADAPTER DATA PATH		-	A		A	
		D-CS-M8550-0-DLH2	1	IBUS ADAPTER DATA PATH		-	A		A	
		D-CS-M8550-0-DLH3	1	IBUS ADAPTER DATA PATH		-	A		A	
		D-CS-M8550-0-DLH4	1	IBUS ADAPTER DATA PATH		-	A		A	
		D-CS-M8550-0-DLH5	1	IBUS ADAPTER DATA PATH		-	A		A	
		D-CS-M8550-0-DLH6	1	IBUS ADAPTER POWER AND GROUND		-	A		A	
		K-CO-M8550-0-4	1	DATA PATH BOARD (CALDEC DATA BASE)		B	B		B	
		D-AH-M8550-0-5	4	DATA PATH BOARD		A	A		A	
		B-MH-M8550-0-6	1	MODULE ECO HISTORY		-	-		-	
		5010519	-	ETCH CIRCUIT BOARD		B	B			
		P00-M8550-00		PROCESS SHEET (REF ONLY)		-	-			

ECO NO	ORIG	00001	00002	00003
			NEW LAYOUT REF SHT 3	

CUSTOMER PRINT SET CODES
X = PRINT OF DOCUMENT INCLUDED IN PRINT SET
C = INCLUDES ALL PRINTS INDICATED ON DOCUMENT
S = CONFIDENTIAL AUTHORIZED SIGNATURE REQUIRED

TITLE	SHEET	SIZE	CODE	NUMBER	REV
DATA PATH BOARD	SHEET 2 OF 3	B	DD	M8550-0	C

MR

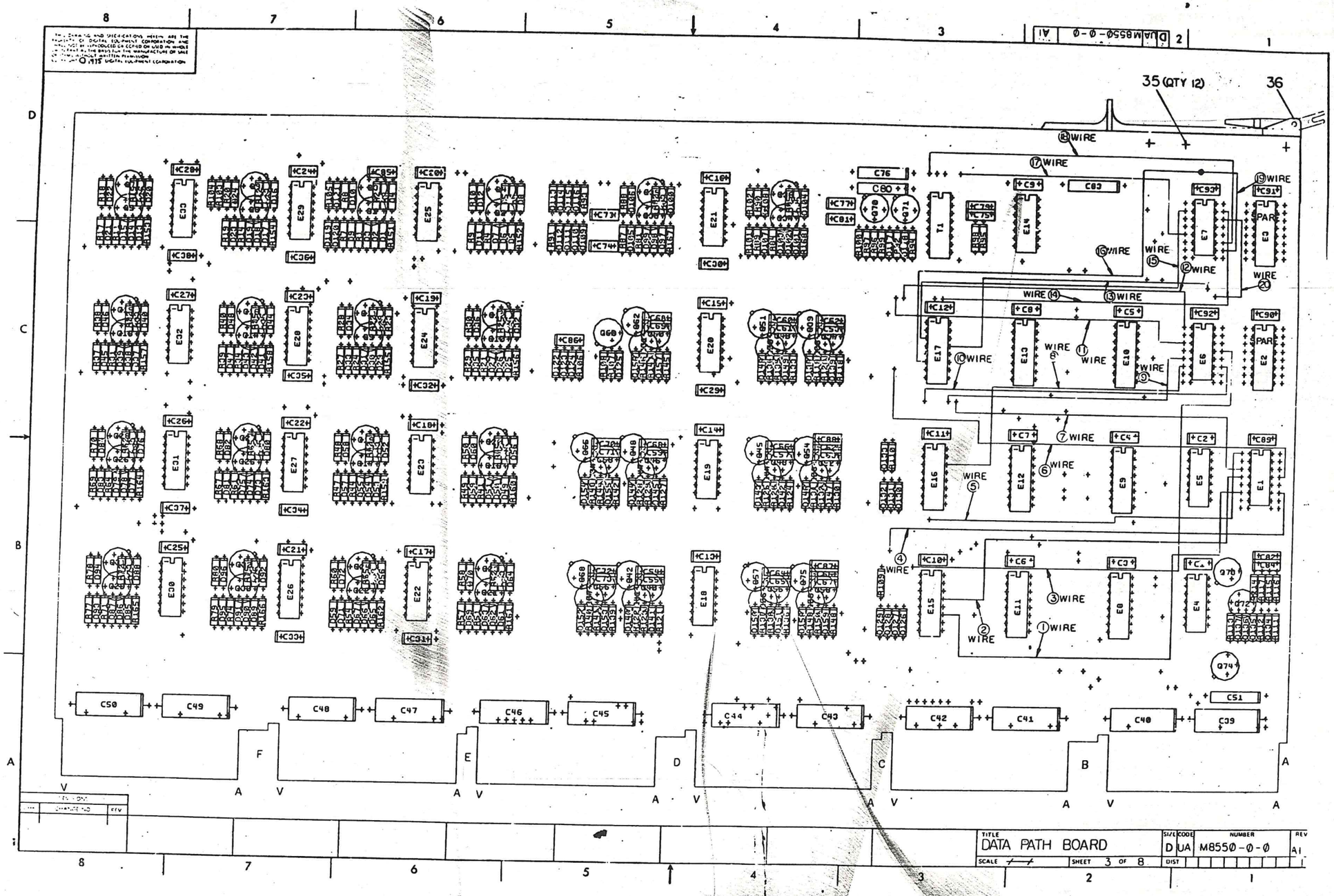
35 (QTY 12)
36
WIRE
TITLE
DATA PATH BOARD
SIZE
D
CODE
UA
NUMBER
M8550-0-0
REV
A1
SCALE
SHEET 3 OF 8
DIST

REVISION CONTROL SHEET

CUSTOMER PRINT SET	MFG SET	DRAWING NO	NO OF SHT	DESCRIPTION	OPTION NO/FILE DATE	REVISIONS
				MODULE REVISION		C
		D-UA-M8550-0-0	6	DATA PATH BD		B
		D-CS-M8550-0-DLH1	1	BUS ADAPTER DATA PATH		B
		D-CS-M8550-0-DLH2	1	BUS ADAPTER DATA PATH		B
		D-CS-M8550-0-DLH3	1	BUS ADAPTER DATA PATH		B
		D-CS-M8550-0-DLH4	1	BUS ADAPTER DATA PATH		B
		D-CS-M8550-0-DLH5	1	BUS ADAPTER DATA PATH		B
		D-CS-M8550-0-DLH6	1	BUS ADAPTER POWER AND GROUND		B
		K-CO-M8550-0-4	1	DATA PATH BOARD CALDEC DATA BASE		C
		D-AH-M8550-0-5	4	DATA PATH BOARD		B
		B-MH-M8550-0-6	1	MODULE ECO HISTORY		B
		5010519		ETCH CIRCUIT BOARD		
		P00-M8550-00		PROCESS SHEET (REF ONLY)		C

CUSTOMER PRINT SET CODES

X = PRINT OF DOCUMENT INCLUDED IN PRINT SET
C = INCLUDES ALL PRINTS INDICATED ON DOCUMENT
S = CONFIDENTIAL AUTHORIZED SIGNATURE REQUIRED

ECO NO 00002

TITLE		SIZE	CODE	NUMBER	REV
DATA PATH BOARD	SHEET 3 OF 3	B	DD	M8550-0	C

MP

THIS DRAWING AND SPECIFICATIONS, HEREIN, ARE THE PROPERTY OF DIGITAL EQUIPMENT CORPORATION, AND SHALL NOT BE REPRODUCED OR COPIED OR USED IN WHOLE OR IN PART AS THE BASIS FOR THE MANUFACTURE OR SALE OF ITEMS WITHOUT WRITTEN PERMISSION
COPYRIGHT © 1975, DIGITAL EQUIPMENT CORPORATION

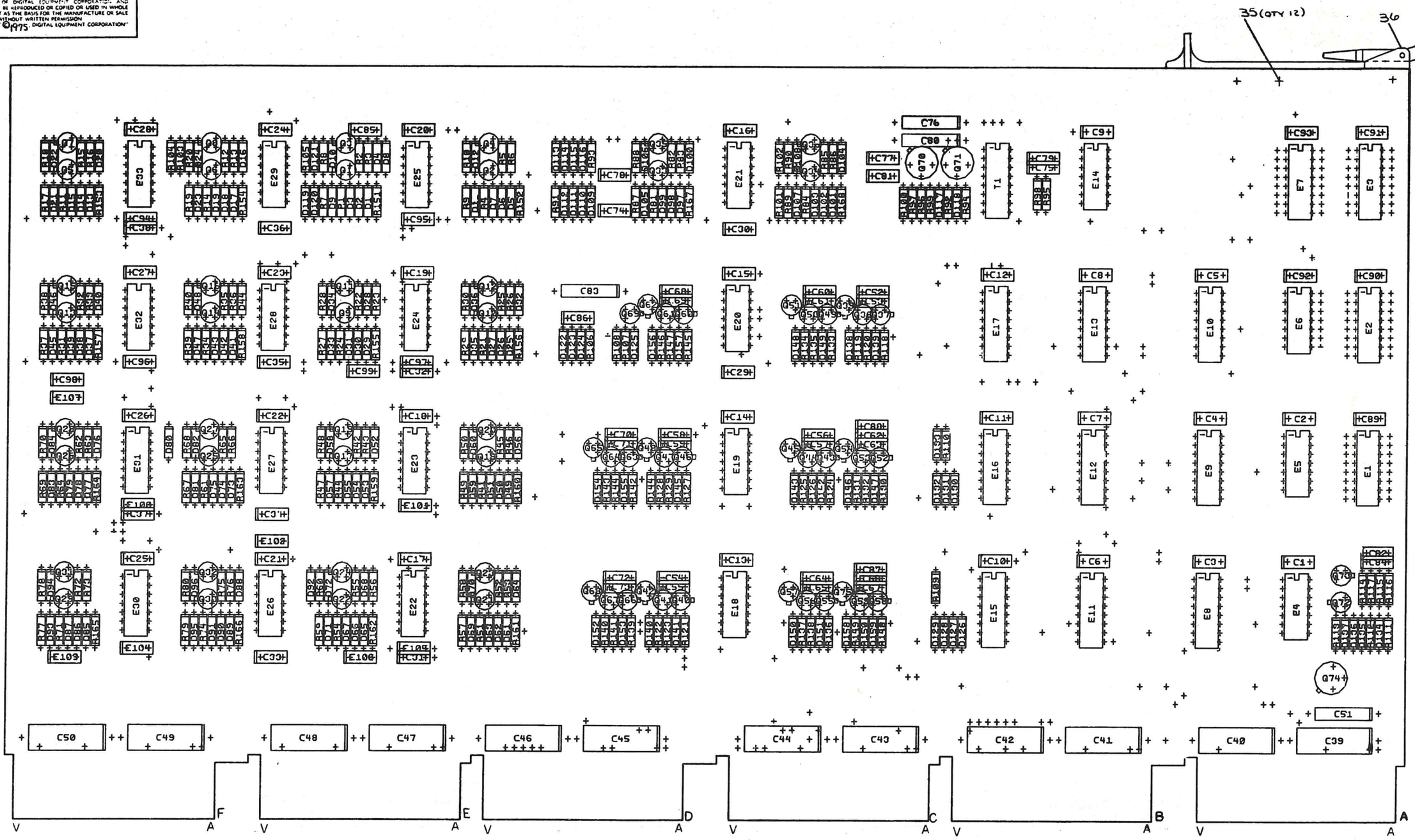

REVISION		
SYM	CHANGE NO	REV

TITLE	SIZE	CODE	NUMBER	REV.
DATA PATH BOARD	D	UA	M8550-0-0	B
SCALE — / —	SHEET 2 OF 6	DIST.		

D UA M8550-0-0 B

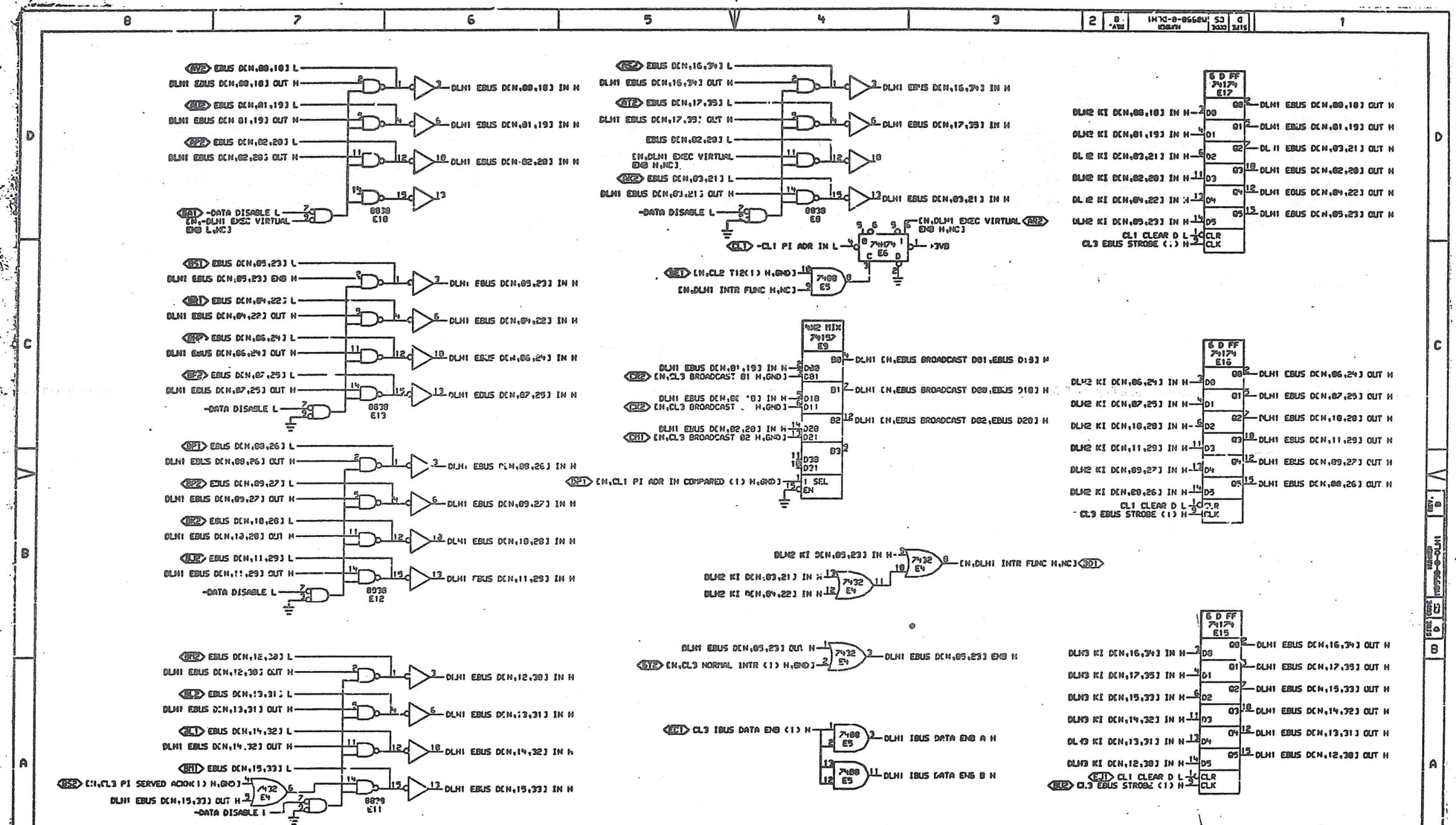

*THIS DRAWING AND SPECIFICATIONS, HEREIN, ARE THE PROPERTY OF DIGITAL EQUIPMENT CORPORATION AND SHALL NOT BE REPRODUCED OR COPIED OR USED IN WHOLE OR IN PART AS THE BASIS FOR THE MANUFACTURE OR SALE OF ITEMS WITHOUT WRITTEN PERMISSION.
COPYRIGHT © 1975, DIGITAL EQUIPMENT CORPORATION

REVISIONS		
CHK	CHANGE NO.	REV

digital

DRAWN: Tandy | DATE 30-JAN-75 | ENG. | DATE | TITLE: IBUS ADAPTER DATA PATH

DATE 30-SEP-75 | LOCATION: | PAGE OF

DLH1RC4.426) 18-NOV-75 18:32 | NEXT HIGHER ASSEMBLY:

FIRST USED ON OPTION/MODEL: KL10 | B-DD-M8550-0

SIZE	CODE	NUMBER	REV.
D	CS	M8550-0-DLH1	B

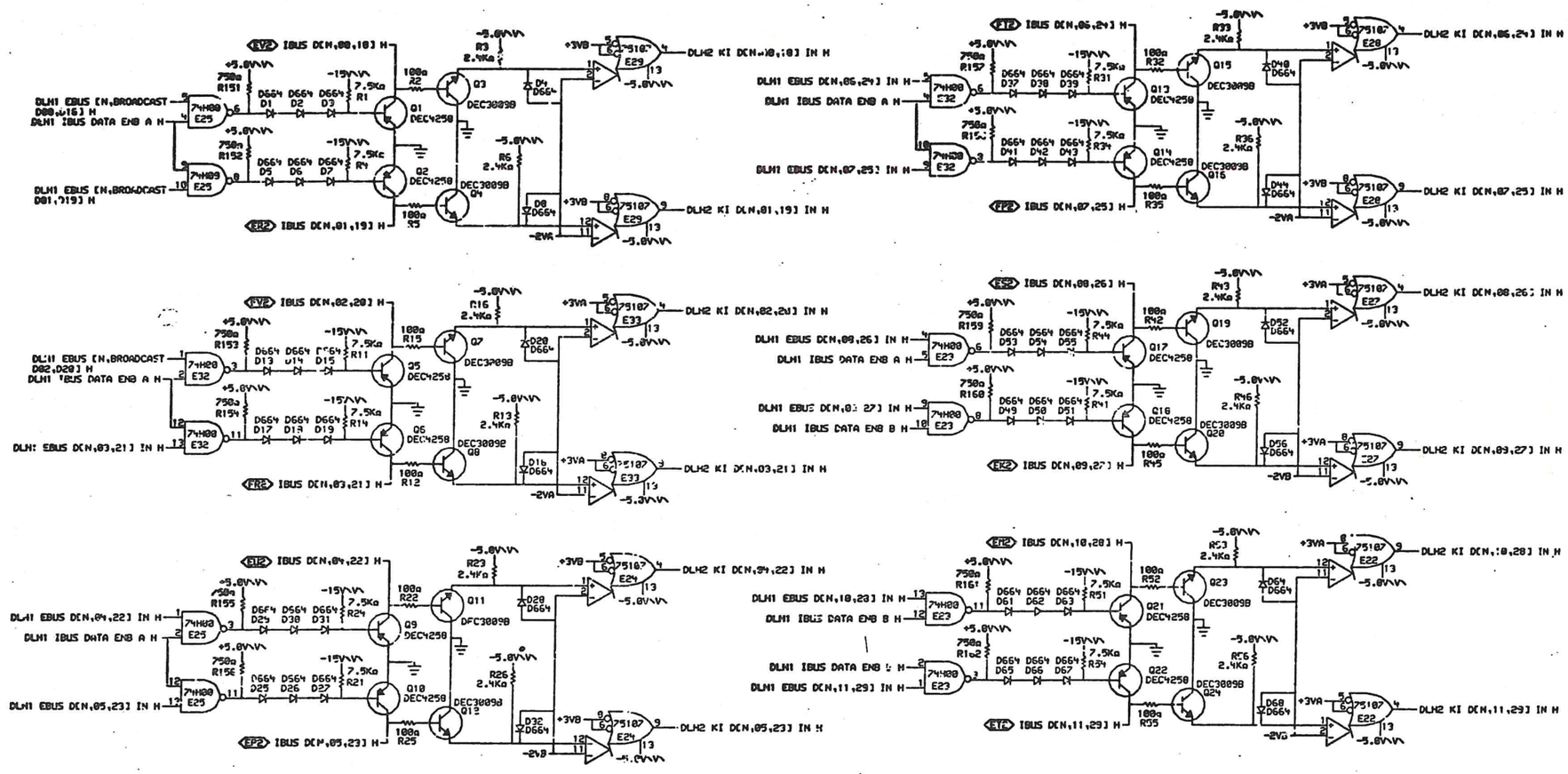

"THIS DRAWING AND SPECIFICATIONS, HEREIN, ARE THE PROPERTY OF DIGITAL EQUIPMENT CORPORATION AND SHALL NOT BE REPRODUCED OR COPIED OR USED IN WHOLE OR IN PART AS THE BASIS FOR THE MANUFACTURE OR SALE OF ITEMS WITHOUT WRITTEN PERMISSION. COPYRIGHT © 1973, DIGITAL EQUIPMENT CORPORATION"

REVISIONS		
CHK	CHANGE NO.	REV
		B

DLH2R(4,426) 27-JUN-73 19:43 NEAT 41CHER ASSEMBLY:
FIRST USED ON OPTION/MODEL: KL10 B-DD-M8550-0

DRN. DATE 27-JAN-73 ENG. DATE
CHK DATE BOARD LOCATION: SHEET OF

TITLE: IBUS ADAPTER DATA PATH

SIZE	CODE	NUMBER	REV.
D	CS	M8550-0-DLH2	B

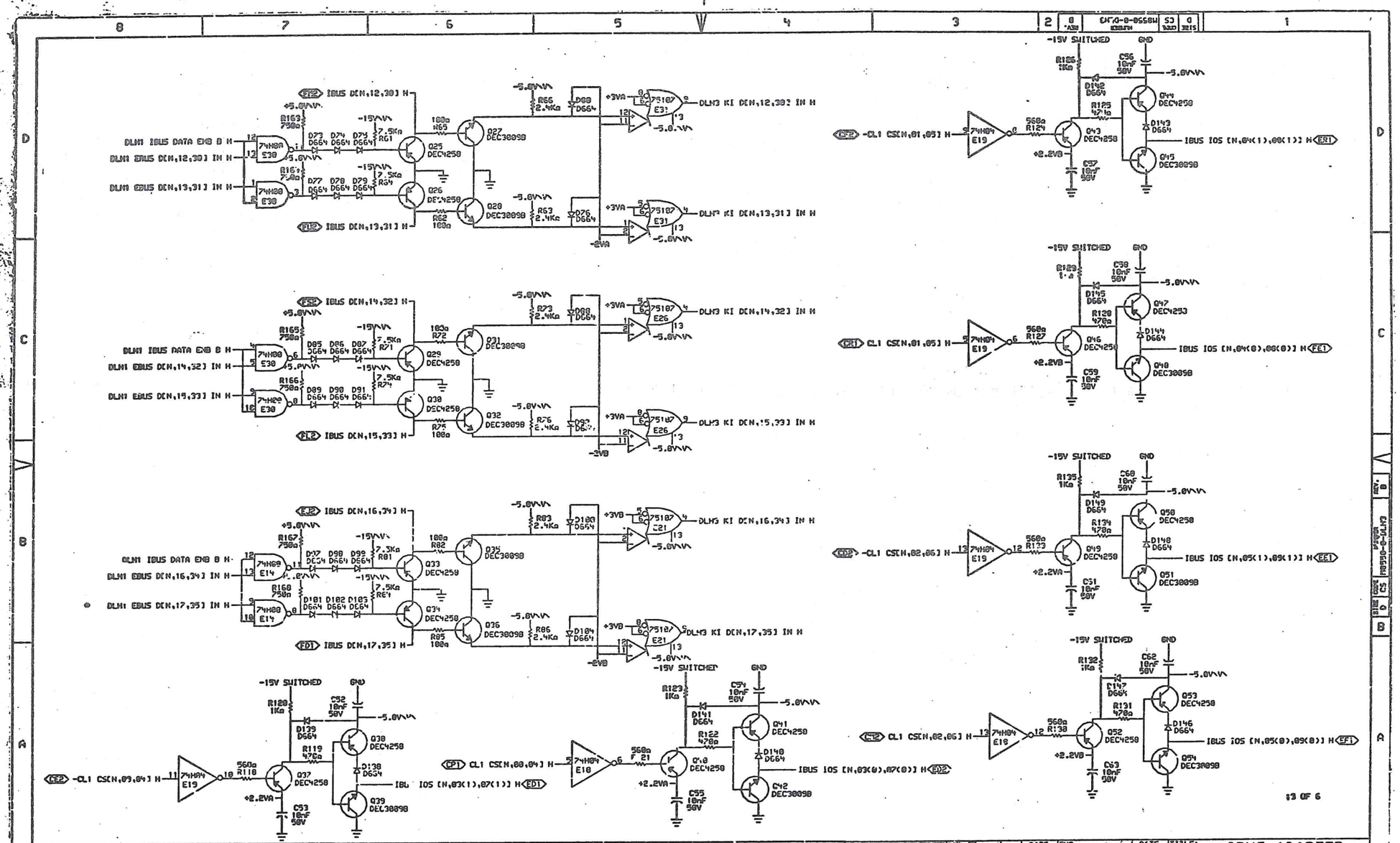

"THIS DRAWING AND SPECIFICATIONS, HEREIN, ARE THE PROPERTY OF DIGITAL EQUIPMENT CORPORATION AND SHALL NOT BE REPRODUCED OR COPIED OR USED IN WHOLE OR IN PART AS THE BASIS FOR THE MANUFACTURE OR SALE OF ITEMS WITHOUT WRITTEN PERMISSION.
COPYRIGHT © 1975, DIGITAL EQUIPMENT CORPORATION"

REVISIONS		
CHK	CHANGE NO.	REV
	BUCKED	

digital

DRW. | DATE 27-JUN-75 | ENG. | DATE
CHK'D. | DATE | BOARD LOCATION: | SHEET | OF
DLH3R(4,426) | 27-JUN-75 10:46 | NEXT HIGHER ASSEMBLY: B-DD-M8550-0
FIRST USED ON OPTION/MODEL: KL10

TITLE: IBUS ADAPTER DATA PATH

SIZE	CODE	NUMBER	REV.
D	CS	M8550-0-DLH3	B

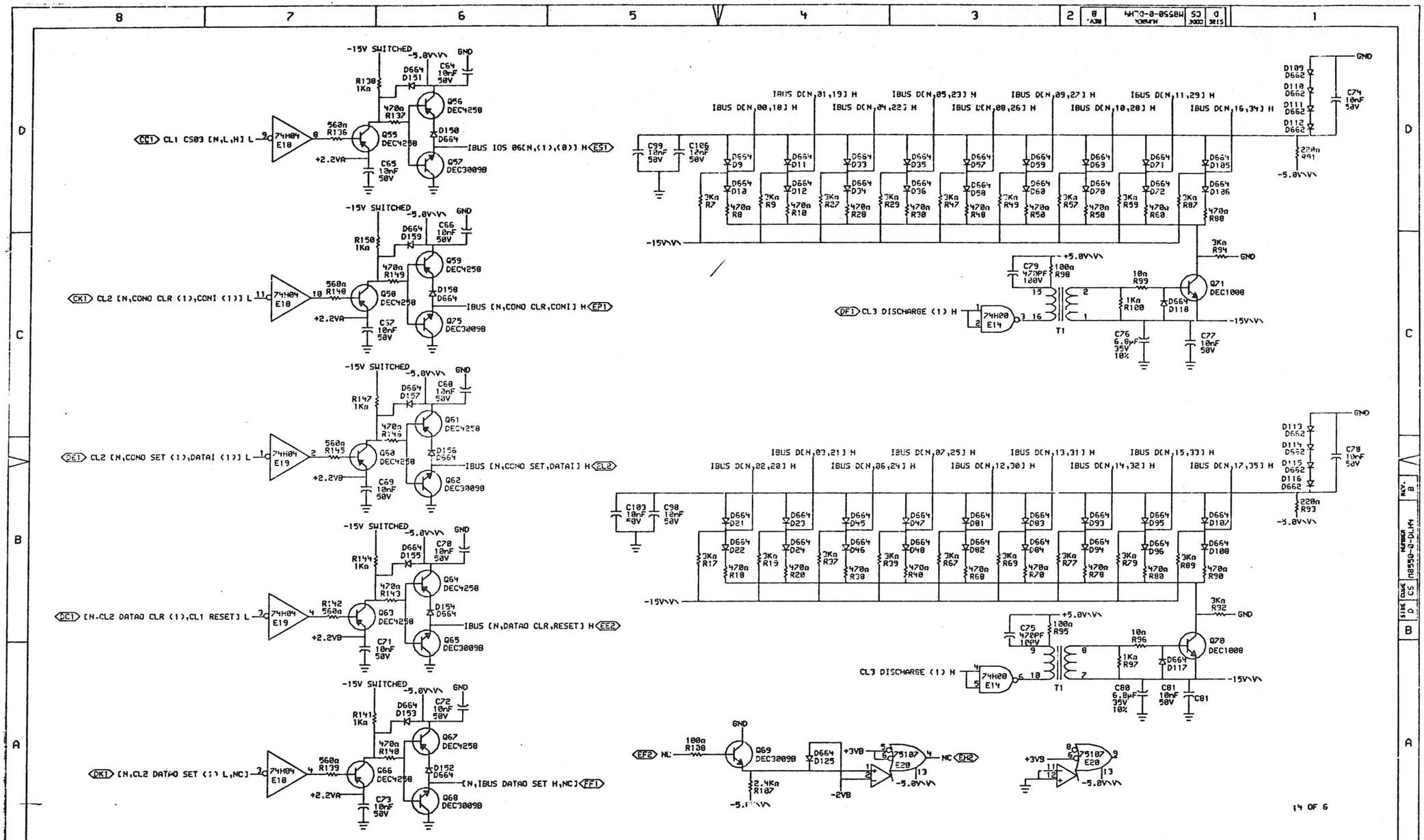

"THIS DRAWING AND SPECIFICATIONS, HEREIN, ARE THE PROPERTY OF DIGITAL EQUIPMENT CORPORATION AND SHALL NOT BE REPRODUCED OR COPIED OR USED IN WHOLE OR IN PART AS THE BASIS FOR THE MANUFACTURE OR SALE OF ITEMS WITHOUT WRITTEN PERMISSION. COPYRIGHT © 1979, DIGITAL EQUIPMENT CORPORATION"

REVISIONS		
CHK	CHANGE NO.	REV
		B

DRAWN: Taylor DATE 27-JUN-79 ENG. DATE
CHK'D: DATE BOARD LOCATION: SHEET OF
DLH4-R(4,4,26) 27-JUN-79 10:51 NEXT HIGHER ASSEMBLY: B-DD-M8550-0
FIRST USED ON OPTION/MODEL: KL:0

TITLE: IBUS ADAPTER DATA PATH

SIZE	CODE	NUMBER	REV.
D	CS	M8550-0-DLH4	B

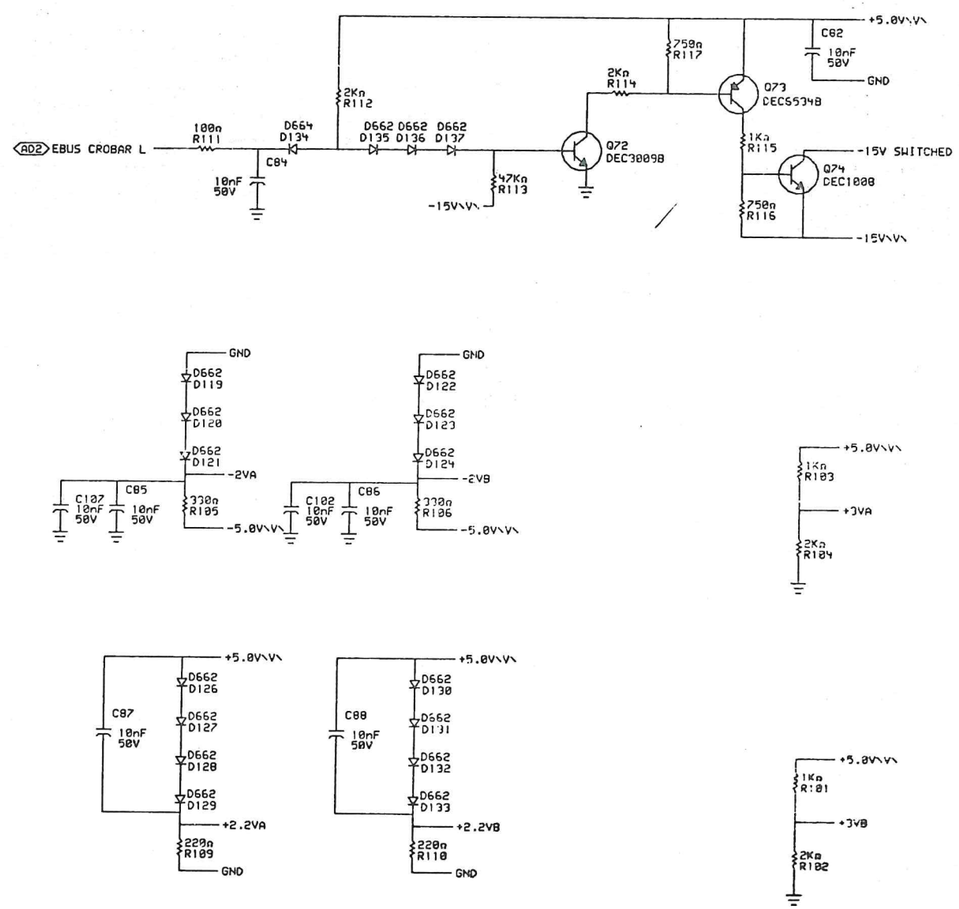

15 OF 6

"THIS DRAWING AND SPECIFICATIONS, HEREIN, ARE THE PROPERTY OF DIGITAL EQUIPMENT CORPORATION AND SHALL NOT BE REPRODUCED OR COPIED OR USED IN WHOLE OR IN PART AS THE BASIS FOR THE MANUFACTURE OR SALE OF ITEMS WITHOUT WRITTEN PERMISSION.
COPYRIGHT © 1975, DIGITAL EQUIPMENT CORPORATION"

REVISIONS		
CHK	CHANGE NO.	REV
		B
BRUCKERT		

DRN. J. Looney DATE 27-JUN-75 ENG. DATE
CHK DATE BOARD LOCATION:
SHEET 1 OF 1
DLHSR(4,426) 27-JUN-75 10:56 NEXT HIGHER ASSEMBLY: B-DD-M8550-0
FIRST USED ON OPTION/MODEL: KL10

TITLE: IBUS ADAPTER DATA PATH

SIZE	CODE	NUMBER	REV.
D	CS	M8550-0-DLH5	B

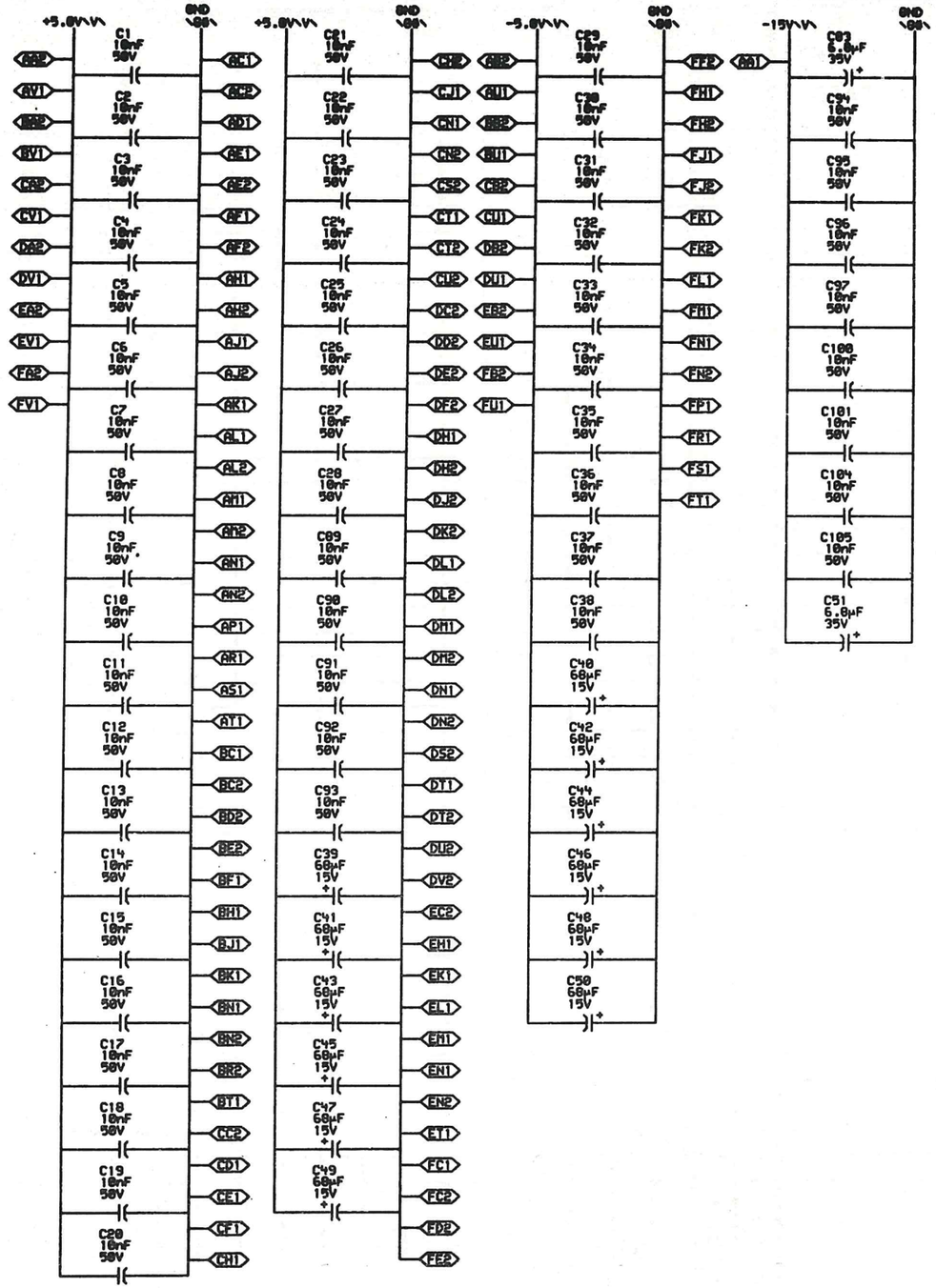

\0400\M8550 SPARE PIN1 — AB1
\0400\M8550 SPARE PIN2 — BB1
\0400\M8550 SPARE PIN3 — BV2
\0400\M8550 SPARE PIN4 — CA1
\0400\M8550 SPARE PIN5 — CB1
\0400\M8550 SPARE PIN6 — CJ2

\0400\M8550 SPARE PIN8 — CL2
\0400\M8550 SPARE PIN9 — CP2
\0400\M8550 SPARE PIN10 — CS1
\0400\M8550 SPARE PIN11 — CY2
\0400\M8550 SPARE PIN12 — DA1
\0400\M8550 SPARE PIN13 — DB1
\0400\M8550 SPARE PIN14 — DD1
\0400\M8550 SPARE PIN15 — DJ1
\0400\M8550 SPARE PIN16 — DP2
\0400\M8550 SPARE PIN17 — DR1
\0400\M8550 SPARE PIN18 — DR2
\0400\M8550 SPARE PIN19 — DS1
\0400\M8550 SPARE PIN20 — EA1
\0400\M8550 SPARE PIN21 — EB1
\0400\M8550 SPARE PIN22 — FA1
\0400\M8550 SPARE PIN23 — FB1

NOTE:

1. ALL 74H SERIES LOGIC IS TO BE 1074H SERIES
2. THE FOLLOWING PIN NUMBERS APPLY TO TTL DIP PACKAGES:

GND	+5.0V	PACKAGE TYPE
8	16	16 PIN DIP
7	14	14 PIN DIP

"THIS DRAWING AND SPECIFICATIONS, HEREIN, ARE THE PROPERTY OF DIGITAL EQUIPMENT CORPORATION AND SHALL NOT BE REPRODUCED OR COPIED OR USED IN WHOLE OR IN PART AS THE BASIS FOR THE MANUFACTURE OR SALE OF ITEMS WITHOUT WRITTEN PERMISSION.
COPYRIGHT © 1970, DIGITAL EQUIPMENT CORPORATION"

REVISIONS

CHK	CHANGE NO.	REV
	00002	B

BRUCKERT 5-16-75

digital

DRN. Loomley
CHK
KL8AK(4,426) 12-JUN-75 11:00
FIRST USED ON OPTION/MODEL: KL10

DATE 12-JUN-75 ENG.
DATE
BOARD LOCATION:
SHEET 1 OF 1
NEXT HIGHER ASSEMBLY: B-DD-M8550-0

TITLE: IBUS ADAPTOR POWER AND GROUND

SIZE	CODE	NUMBER	REV.
D	CS	M8550-0-DLH6	B

REVISION CONTROL SHEET

CUSTOMER PRINT SET	MFG SET	DRAWING NO	NO OF SHT	DESCRIPTION	OPTION NO/FILE DATE	REVISIONS
				MODULE REVISION		C
		D-UA-M8550-0-0	6	DATA PATH BD		B
		D-CS-M8550-0-DLH1	1	BUS ADAPTER DATA PATH		B
		D-CS-M8550-0-DLH2	1	BUS ADAPTER DATA PATH		B
		D-CS-M8550-0-DLH3	1	BUS ADAPTER DATA PATH		B
		D-CS-M8550-0-DLH4	1	BUS ADAPTER DATA PATH		B
		D-CS-M8550-0-DLH5	1	BUS ADAPTER DATA PATH		B
		D-CS-M8550-0-DLH6	1	BUS ADAPTER POWER AND GROUND		B
		K-CO-M8550-0-4	1	DATA PATH BOARD		C
				CALDEC DATA BASE		
		D-AH-M8550-0-5	4	DATA PATH BOARD		B
		B-MH-M8550-0-6	1	MODULE ECO HISTORY		B
		5010519		ETCH CIRCUIT BOARD		C
		P00-M8550-00		PROCESS SHEET (REF ONLY)		

CUSTOMER PRINT SET CODES
X = PRINT OF DOCUMENT INCLUDED IN PRINT SET
C = INCLUDES ALL PRINTS INDICATED ON DOCUMENT
S = CONFIDENTIAL AUTHORIZED SIGNATURE REQUIRED

ECO NO 00002

TITLE		SIZE	CODE	NUMBER	REV
DATA PATH BOARD	SHEET 3 OF 3	B	DD	M8550-0	C

MR

473

THIS DRAWING AND SPECIFICATIONS, HEREIN, ARE THE PROPERTY OF DIGITAL EQUIPMENT CORPORATION AND SHALL NOT BE REPRODUCED OR COPIED OR USED IN WHOLE OR IN PART AS THE BASIS FOR THE MANUFACTURE OR SALE OF ITEMS WITHOUT WRITTEN PERMISSION.
COPYRIGHT © 1975, DIGITAL EQUIPMENT CORPORATION

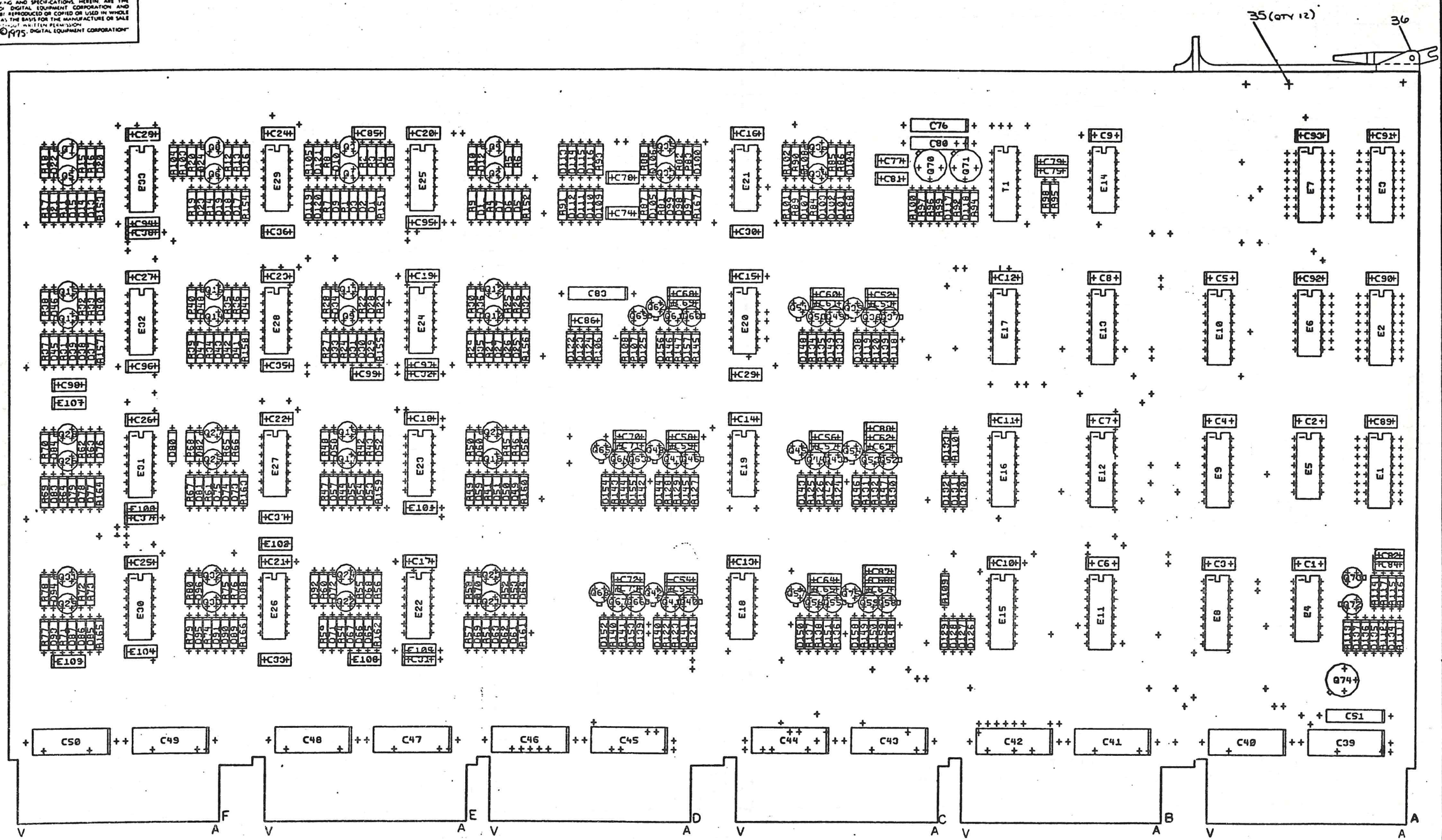

REV SYM	CHANGE NO	REV
CHK		

TITLE	SIZE	CODE	NUMBER	REV.
DATA PATH BOARD	D	UA	M8550-0-0	B
SCALE — / —	SHEET 2 OF 6	DIST.		

REVISION CONTROL SHEET

CUSTOMER PRINT SET	MFG SET	DRAWING NO	NO OF SHT	DESCRIPTION	OPTION NO/FILE DATE	REVISIONS		
			-	MODULE REVISION		A	B	C
		D-UA-M8551-Ø-Ø	5	CONTROL BD FOR KL1Ø I/O ADAPTER		-	A	B
		D-CS-M8551-Ø-CL1		I/O BUS ADAPTER CONTROL INTERFACE		-	A	B
		D-CS-M8551-Ø-CL2	1	I/O BUS ADAPTER CONTROL INTERFACE		-	A	A
		D-CS-M8551-Ø-CL3	1	I/O BUS ADAPTER CONTROL INTERFACE		-	A	B
		D-CS-M8551-Ø-CL4	1	I/O BUS ADAPTER CONTROL INTERFACE		-	A	B
		D-CS-M8551-Ø-CL5	1	I/O BUS ADAPTER CAPS		-	A	A
		K-CO-M8551-Ø-4	1	CONTROL BD FOR KL1Ø I/O ADAPTER		B	B	B
		D-AH-M8551-Ø-5	2	CONTROL BD FOR KL1Ø I/O ADAPTER		A	A	A
		E-MD-7606166-0-0	6	MULTI-LAYER QUAD PANEL DATA		#	#	#
		B-MH-M8551-Ø-6	1	MODULE ECO HISTORY		-	A	B
		5010518	-	ETCH CIRCUIT BOARD		B	B	B
		P00-M8551-ØØ		PROCESS SHEET (REF ONLY)		-	-	

CUSTOMER PRINT SET CODES
X = PRINT OF DOCUMENT INCLUDED IN PRINT SET
C = INCLUDES ALL PRINTS INDICATED ON DOCUMENT
S = CONFIDENTIAL AUTHORIZED SIGNATURE REQUIRED

ECO NO	ORIG	0001	0002

TITLE		SIZE	CODE	NUMBER	REV
CONTROL BD FOR KL1Ø I/O ADAPTER	SHEET 2 OF 2	B	DD	M8551-Ø	B

THIS DRAWING AND SPECIFICATIONS, HEREIN, ARE THE PROPERTY OF DIGITAL EQUIPMENT CORPORATION AND SHALL NOT BE REPRODUCED OR COPIED OR USED IN WHOLE OR IN PART AS THE BASIS FOR THE MANUFACTURE OR SALE OF ITEMS WITHOUT WRITTEN PERMISSION.
COPYRIGHT © 1975 DIGITAL EQUIPMENT CORPORATION

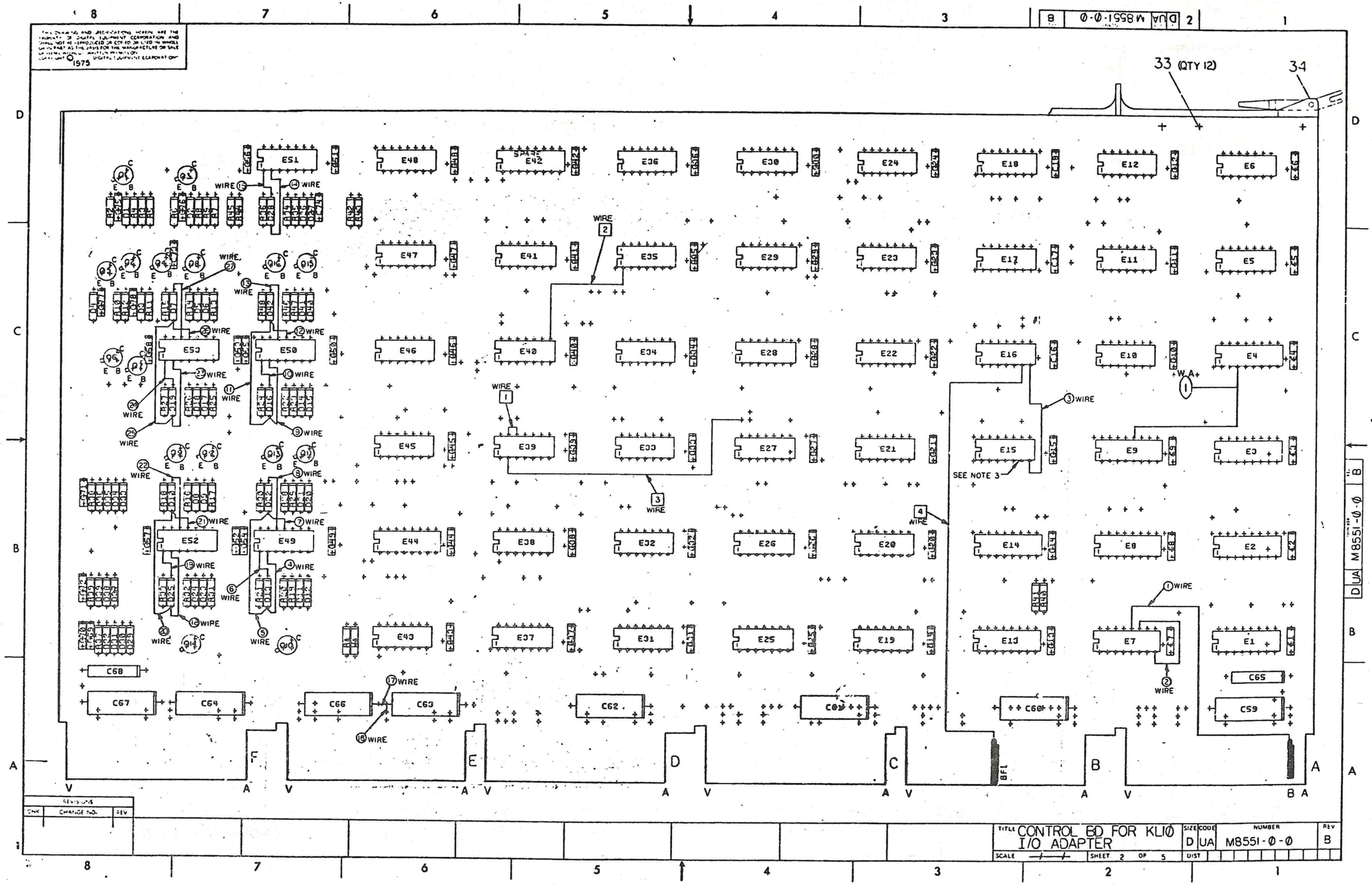

REVISIONS		
CHK	CHANGE NO.	REV

TITLE	SIZE	CODE	NUMBER	REV
CONTROL BD FOR KLIØ I/O ADAPTER	D	UA	M8551-Ø-Ø	B
SCALE — / —	SHEET 2 OF 5	DIST		

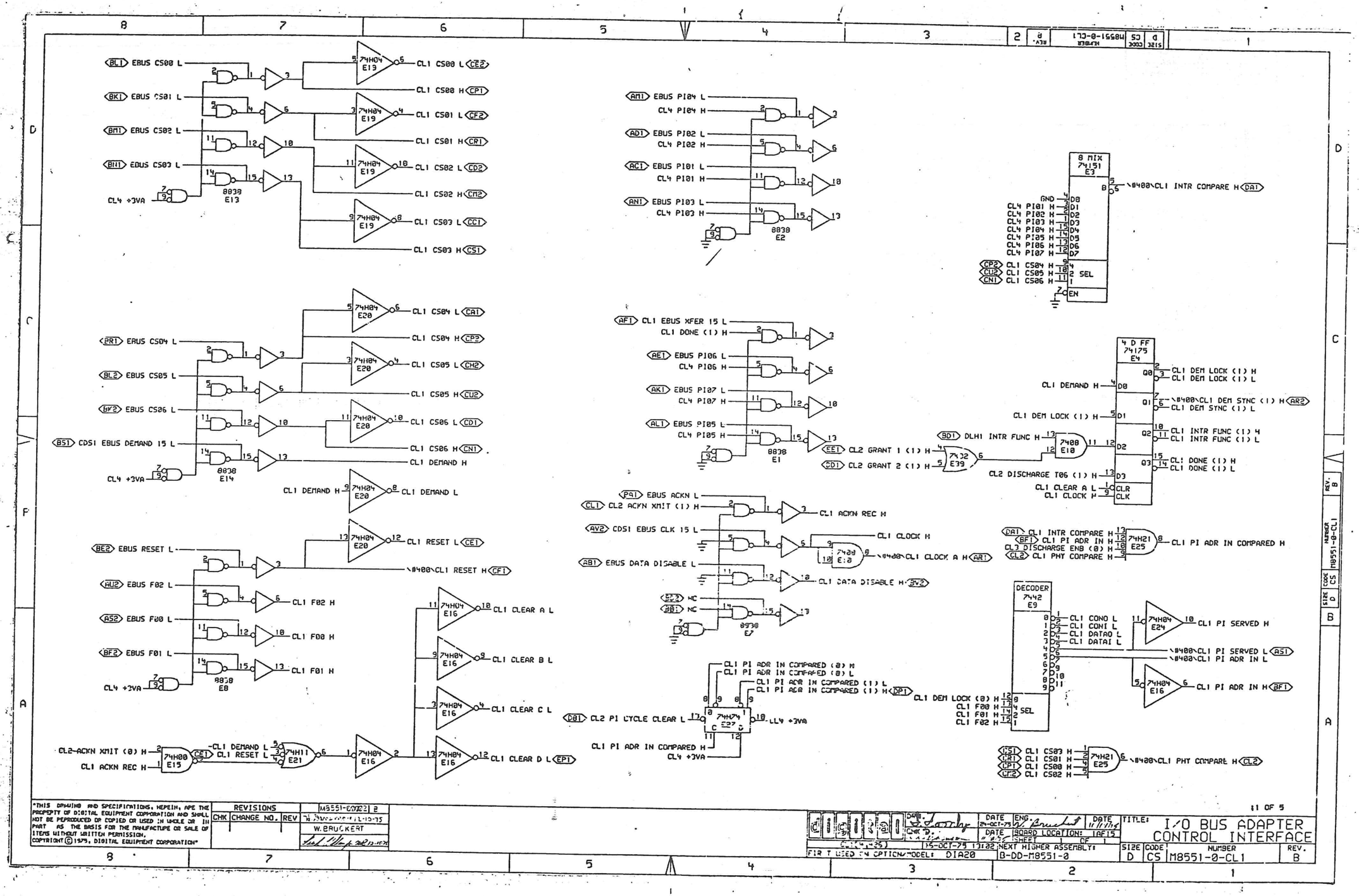
EBUS CS00 L
EBUS CS01 L
EBUS CS02 L
EBUS CS03 L
CL4 +3VA
8038 E13
74H04 E19
CL1 CS00 L CE2
CL1 CS00 H CP1
CL1 CS01 L CF2
CL1 CS01 H CR1
CL1 CS02 L CD2
CL1 CS02 H CM2
CL1 CS03 L CC1
CL1 CS03 H CS1
EBUS CS04 L
EBUS CS05 L
EBUS CS06 L
CDS1 EBUS DEMAND 15 L
8038 E14
74H04 E20
CL1 CS04 L CA1
CL1 CS04 H CP3
CL1 CS05 L CH2
CL1 CS05 H CU2
CL1 CS06 L CD1
CL1 CS06 H CN1
CL1 DEMAND H
CL1 DEMAND L
EBUS RESET L
EBUS F02 L
EBUS F00 L
EBUS F01 L
8038 E8
CL1 RESET L CE1
\0400\CL1 RESET H CF1
CL1 F02 H
CL1 F00 H
CL1 F01 H
CL2-ACKN XMIT (0) H
CL1 ACKN REC H
74H00 E15
74H11 E21
74H04 E16
CL1 CLEAR A L
CL1 CLEAR B L
CL1 CLEAR C L
CL1 CLEAR D L EP1
EBUS PI04 L
CL4 PI04 H
EBUS PI02 L
CL4 PI02 H
EBUS PI01 L
CL4 PI01 H
EBUS PI03 L
CL4 PI03 H
8038 E2
8 MIX 74151 E3
\0400\CL1 INTR COMPARE H DA1
CL1 CS04 H CP2
CL1 CS05 H CU2
CL1 CS06 H CN1
CL1 EBUS XFER 15 L
CL1 DONE (1) H
EBUS PI06 L
CL4 PI06 H
EBUS PI07 L
CL4 PI07 H
EBUS PI05 L
CL4 PI05 H
8038 E1
CL2 GRANT 1 (1) H EE1
CL2 GRANT 2 (1) H CD1
7432 E39
DLH1 INTR FUNC H BD1
7408 E10
CL2 DISCHARGE T06 (1) H
4 D FF 74175 E4
CL1 DEMAND H
CL1 DEM LOCK (1) H
CL1 CLEAR A L
CL1 CLOCK H
CL1 DEM LOCK (1) H
CL1 DEM LOCK (1) L
\0400\CL1 DEM SYNC (1) H AR2
CL1 DEM SYNC (1) L
CL1 INTR FUNC (1) H
CL1 INTR FUNC (1) L
CL1 DONE (1) H
CL1 DONE (1) L
EBUS ACKN L PS1
CL2 ACKN XMIT (1) H CL1
CL1 ACKN REC H
CDS1 EBUS CLK 15 L AV2
CL1 CLOCK H
7408 E10
\0400\CL1 CLOCK A H AR1
EBUS DATA DISABLE L AB1
CL1 DATA DISABLE H SV2
NC
8038 E7
CL1 INTR COMPARE H DA1
CL1 PI ADR IN H BF1
CL3 DISCHARGE ENB (0) H
CL1 PHT COMPARE H CL2
74H21 E25
CL1 PI ADR IN COMPARED H
DECODER 7442 E9
CL1 CONO L
CL1 CONI L
CL1 DATAO L
CL1 DATAI L
CL1 PI SERVED H
\0400\CL1 PI SERVED L AS1
\0400\CL1 PI ADR IN L
CL1 PI ADR IN H BF1
CL1 PI ADR IN COMPARED (0) H
CL1 PI ADR IN COMPARED (0) L
CL1 PI ADR IN COMPARED (1) L
CL1 PI ADR IN COMPARED (1) H XP1
CL1 DEM LOCK (0) H
CL1 F00 H
CL1 F01 H
CL1 F02 H
CL2 PI CYCLE CLEAR L DB1
74H74 E27
CL1 PI ADR IN COMPARED H
CL4 +3VA
CL1 CS03 H CS1
CL1 CS01 H CR1
CL1 CS00 H CP1
CL1 CS02 H CM2
74H21 E25
\0400\CL1 PHT COMPARE H CL2
11 OF 5
THIS DRAWING AND SPECIFICATIONS, HEREIN, ARE THE PROPERTY OF DIGITAL EQUIPMENT CORPORATION AND SHALL NOT BE REPRODUCED OR COPIED OR USED IN WHOLE OR IN PART AS THE BASIS FOR THE MANUFACTURE OR SALE OF ITEMS WITHOUT WRITTEN PERMISSION. COPYRIGHT © 1979, DIGITAL EQUIPMENT CORPORATION
REVISIONS
CHK CHANGE NO. REV
M8551-0/0022 2
W. BRUCKERT
DATE 15-OCT-79 13:22
NEXT HIGHER ASSEMBLY: B-DD-M8551-0
FIRST USED ON OPTION/MODEL: DIA20
TITLE: I/O BUS ADAPTER CONTROL INTERFACE
SIZE D CODE CS NUMBER M8551-0-CL1 REV. B

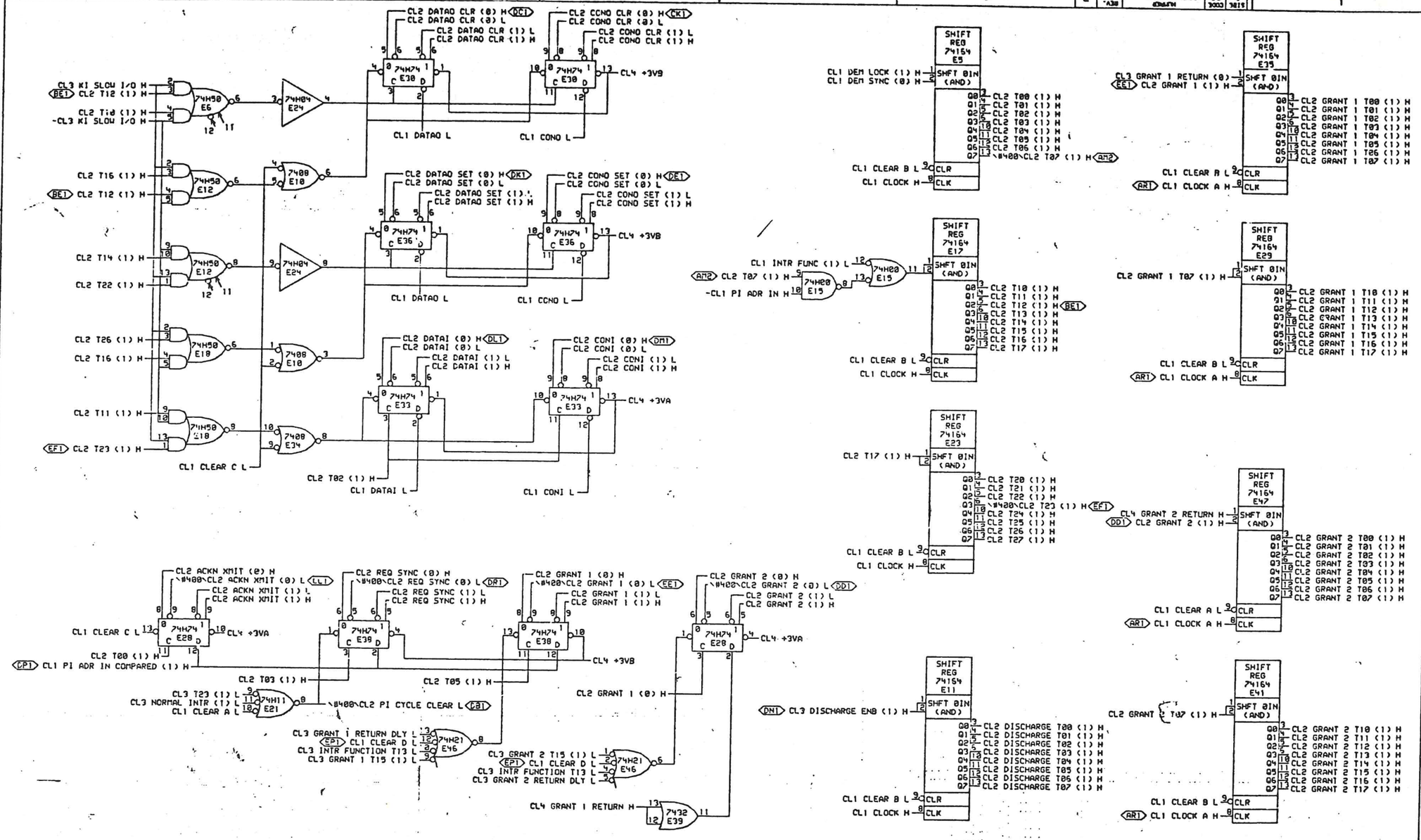

12 OF 5

"THIS DRAWING AND SPECIFICATIONS, HEREIN, ARE THE PROPERTY OF DIGITAL EQUIPMENT CORPORATION AND SHALL NOT BE REPRODUCED OR COPIED OR USED IN WHOLE OR IN PART AS THE BASIS FOR THE MANUFACTURE OR SALE OF ITEMS WITHOUT WRITTEN PERMISSION. COPYRIGHT © 1979, DIGITAL EQUIPMENT CORPORATION"

REVISIONS		
CHK	CHANGE NO.	REV
	00001	A
W. BRUCKET		

digital

DRN. J. Foody DATE 5/14/75 ENG. M. Anchut DATE 5/19/75 TITLE: I/O BUS ADAPTER CONTROL INTERFACE

CHK'D DATE 5/19/75 BOARD LOCATION 1AF15 SHEET 1 OF 1

CL2(4,426) 15-MAY-79 09:02 NEXT HIGHER ASSEMBLY:

FIRST USED ON OPTION/MODEL: D1A20 B-DD-M8551-0

SIZE	CODE	NUMBER	REV.
D	CS	M8551-0-CL2	A

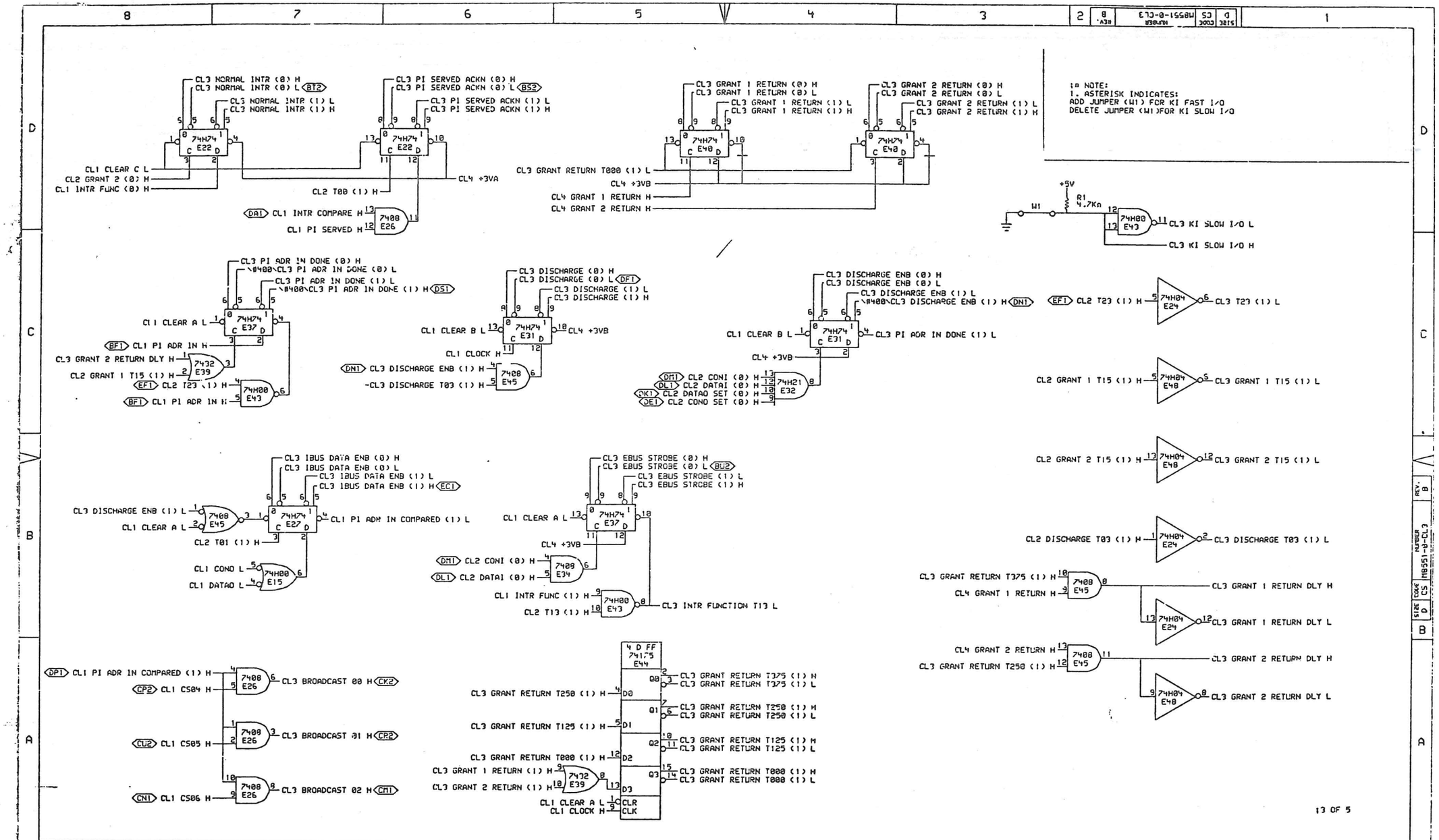

"THIS DRAWING AND SPECIFICATIONS, HEREIN, ARE THE PROPERTY OF DIGITAL EQUIPMENT CORPORATION AND SHALL NOT BE REPRODUCED OR COPIED OR USED IN WHOLE OR IN PART AS THE BASIS FOR THE MANUFACTURE OR SALE OF ITEMS WITHOUT WRITTEN PERMISSION.
COPYRIGHT © 1975, DIGITAL EQUIPMENT CORPORATION"

REVISIONS		
CHK	CHANGE NO.	REV

M8551-0-CL3 B
W. BRUCKERT

DRN. DATE 22-OCT-75 ENG. DATE 11/14/75
CHK DATE 11/18/75 BOARD LOCATION: 1AF15
SHEET 1 OF 1
CL3(4,L26) 23-OCT-75 14:25 NEXT HIGHER ASSEMBLY:
FIRST USED ON OPTION/MODEL: DIA20 B-DD-M8551-0

TITLE: I/O BUS ADAPTER CONTROL INTERFACE

SIZE	CODE	NUMBER	REV.
D	CS	M8551-0-CL3	B

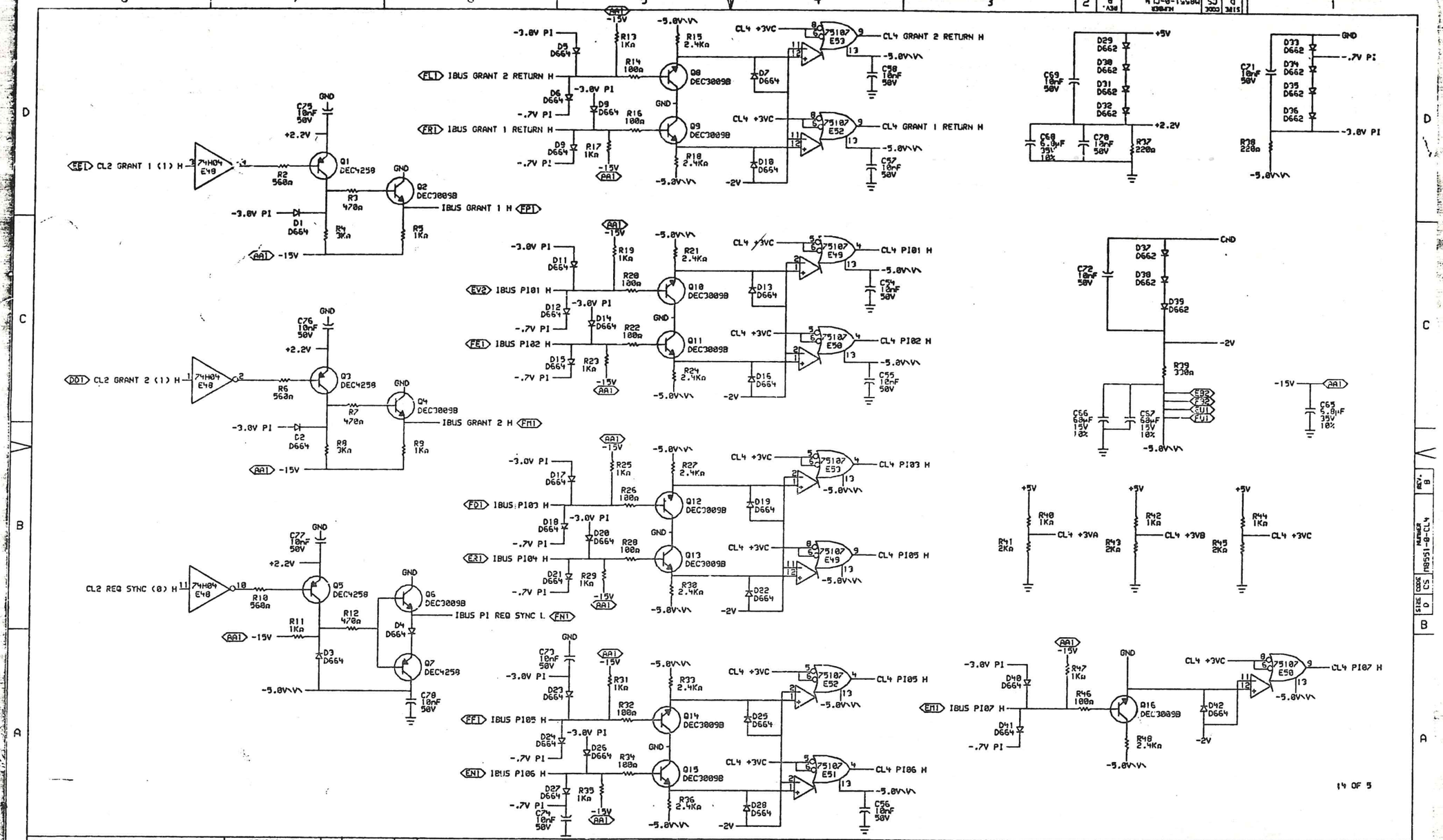

"THIS DRAWING AND SPECIFICATIONS, HEREIN, ARE THE PROPERTY OF DIGITAL EQUIPMENT CORPORATION AND SHALL NOT BE REPRODUCED OR COPIED OR USED IN WHOLE OR IN PART AS THE BASIS FOR THE MANUFACTURE OR SALE OF ITEMS WITHOUT WRITTEN PERMISSION. COPYRIGHT © 1975, DIGITAL EQUIPMENT CORPORATION"

REVISIONS			M8551-00002 B
CHK	CHANGE NO.	REV	W. BRUCKERT

digital

DRN: J. Conley DATE 27-OCT-75 ENG: DATE 11/14/75
CHK'D: D. Hershman DATE 11/14/75 BOARD LOCATION: SHEET 1 OF 1
CL44.426 27-OCT-75 09:20 NEXT HIGHER ASSEMBLY: B-DD-M8551-0
FIRST USED ON OPTION/MODEL: DIA20

TITLE: I/O BUS ADAPTER CONTROL INTERFACE

SIZE	CODE	NUMBER	REV.
D	CS	M8551-0-CL4	B

NOTE:

1. ALL 74H SERIES LOGIC IS TO BE 1074H SERIES
2. THE FOLLOWING PIN NUMBERS APPLY TO TTL DIP PACKAGES:

GND	+5.0V	PACKAGE TYPE
16	8	16 PIN DIP
14	7	14 PIN DIP

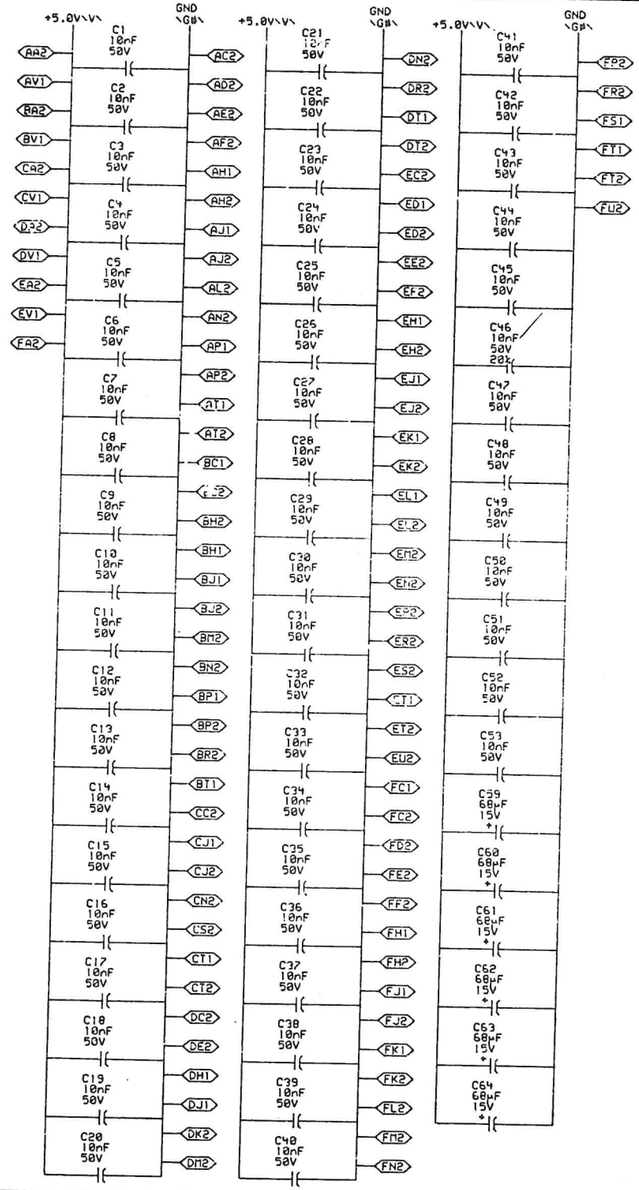

AK2 — [B,GND\G\,NC]
AB2 — [B,NC,-5.0V\V\]
AU1 — [B,NC,-5.0V\V\]
BB2 — [B,NC,-5.0V\V\]
BU1 — [B,NC,-5.0V\V\]
CB1 — SPARE PIN1 M8551\#400\
CB2 — [B,NC,-5.0V\V\]
CH1 — [B,NC,GND\G\]
CU1 — [B,NC,-5.0V\V\]
CV2 — SPARE PIN2 M8551\#400\
DB2 — [B,NC,-5.0V\V\]
DD2 — SPARE PIN3 M8551\#400\
DF2 — SPARE PIN4 M8551\#420\
DH2 — SPARE PIN5 M8551\#420\
DJ2 — SPARE PIN6 M8551\#420\
DL2 — SPARE PIN7 M8551\#420\
DP2 — SPARE PIN8 M8551\#400\
DS2 — SPARE PIN9 M8551\#420\
DU1 — [B,NC,-5.0V\V\]
DU2 — SPARE PIN10 M8551\#400\
DV2 — SPARE PIN11 M8551\#400\
EW1 — SPARE PIN12 M8551\#400\
EB1 — SPARE PIN13 M8551\#400\
ES1 — [B,NC,GND\G\]
FA1 — SPARE PIN14 M8551\#420\
FB1 — SPARE PIN15 M8551\#400\
FS2 — [B,NC,GND\G\]
FV1 — [B,NC,+5.0V\V\]
FV2 — SPARE PIN16 M8551\#400\

15 OF 5

"THIS DRAWING AND SPECIFICATIONS, HEREIN, ARE THE PROPERTY OF DIGITAL EQUIPMENT CORPORATION AND SHALL NOT BE REPRODUCED OR COPIED OR USED IN WHOLE OR IN PART AS THE BASIS FOR THE MANUFACTURE OR SALE OF ITEMS WITHOUT WRITTEN PERMISSION.
COPYRIGHT © 1975, DIGITAL EQUIPMENT CORPORATION"

REVISIONS		
CMK	CHANGE NO.	REV
W.	00001	A
W. BRUCKET		

digital

DRN. L. Frank DATE 5/19/75 ENG. W. Bruckert DATE 5/19/75
CHK'D. Earl Allen DATE 5-19-75 BOARD LOCATION: 1AF15
SHEET 1 OF 1
CL5EXC(4,426) 16-MAY-75 11:22 NEXT HIGHER ASSEMBLY: B-DD-M8551-0
FIRST USED ON OPTION/MODEL: DIA20

TITLE: I/O BUS ADAPTER POWER AND GROUND

SIZE	CODE	NUMBER	REV.
D	CS	M8551-0-CL5	A

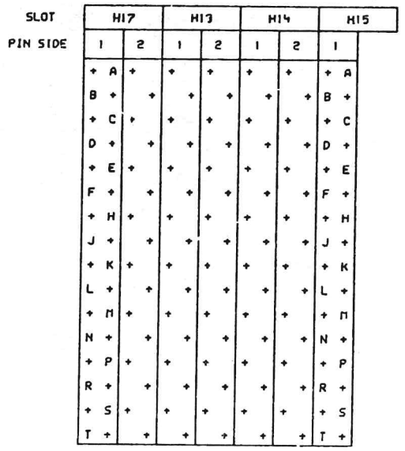

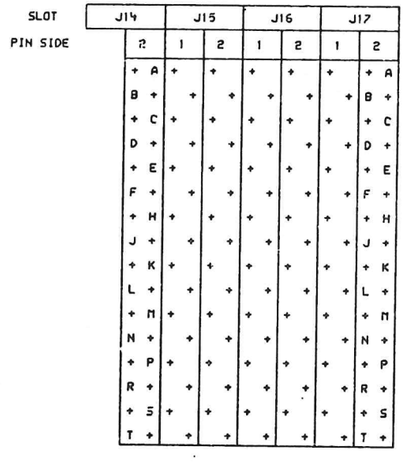

IBUS CONI L	IH14P1	IJ16P2
IBUS CONO CLR L	IH12R2	IJ15R1
IBUS CONO SET L	IH13R1	IJ14R2
IBUS D00 H	IH12A1	IJ14A2
IBUS D01 H	IH12A2	IJ15A1
IBUS D02 H	IH12B2	IJ15B1
IBUS D03 H	IH13B1	IJ15B2
IBUS D04 H	IH13A2	IJ16A1
IBUS D05 H	IH14A1	IJ16A2
IBUS D06 H	IH14B1	IJ16B2
IBUS D07 H	IH14B2	IJ17B1
IBUS D08 H	IH15A1	IJ17A2
IBUS D09 H	IH12C1	IJ14C2
IBUS D10 H	IH13C2	IJ15C1
IBUS D11 H	IH12D2	IJ15D1
IBUS D12 H	IH13D1	IJ15D2
IBUS D13 H	IH13C2	IJ16C1
IBUS D14 H	IH14C1	IJ16C2
IBUS D15 H	IH14D1	IJ15D2
IBUS D16 H	IH14D2	IJ17D1
IBUS D17 H	IH15C1	IJ17C2
IBUS D18 H	IH12E1	IJ14E2
IBUS D19 H	IH12E2	IJ15E1
IBUS D20 H	IH12F2	IJ15F1
IBUS D21 H	IH13F1	IJ15F2
IBUS D22 H	IH13E2	IJ16E1
IBUS D23 H	IH14E1	IJ16E2
IBUS D24 H	IH14F1	IJ16F2
IBUS D25 H	IH14F2	IJ17F1
IBUS D26 H	IH15E1	IJ17E2
IBUS D27 H	IH12H1	IJ14H2
IBUS D28 H	IH12H2	IJ15H1
IBUS D29 H	IH112J2	IJ15J1
IBUS D30 H	IH13J1	IJ15J2
IBUS D31 H	IH13H2	IJ16H1
IBUS D32 H	IH14H1	IJ16H2
IBUS D33 H	IH14J1	IJ16J2
IBUS D34 H	IH14J2	IJ17J1
IBUS D35 H	IH15H1	IJ17H2

IBUS DATAI L	IH13P2	IJ16P1
IBUS DATAO CLR L	IH12P1	IJ14P2
IBUS DATAO SET L	IH13P2	IJ15P1
IBUS DR SPLIT H	IH13L1	IJ15L2
IBUS GRANT 1 H	IH112S2	
IBUS GRANT 1 RETURN H	IH15P1	
IBUS GRANT 2 H	IJ15S1	
IBUS GRANT 2 RETURN H	IJ17P2	
IBUS IOS 03 H	IH13K2	IJ16K1
IBUS IOS 03 L	IH14K1	IJ16K2
IBUS IOS 04 H	IH14L1	IJ15L2
IBUS IOS 04 L	IH114L2	IJ17L1
IBUS IOS 05 H	IH15K1	IJ17K2
IBUS IOS 05 L	IH12M1	IJ14M2
IBUS IOS 06 H	IH12M2	IJ15M1
IBUS IOS 06 L	IH12N2	IJ15N1
IBUS IOS 07 H	IH13N1	IJ15N2
IBUS IOS 07 L	IH13M2	IJ16M1
IBUS IOS 08 H	IH14M1	IJ16M2
IBUS IOS 08 L	IH14N1	IJ16N2
IBUS IOS 09 H	IH14N2	IJ17N1
IBUS IOS 09 L	IH15M1	IJ17M2
IBUS PI REQ SYNC L	IH12S1	IJ14S2
IBUS PI01 H	IH12T2	IJ15T1
IBUS PI02 H	IH13T1	IJ15T2
IBUS PI03 H	IH13S2	IJ16S1
IBUS PI04 H	IH14S1	IJ16S2
IBUS PI05 H	IH14T1	IJ16T2
IBUS PI06 H	IH14T2	IJ17T1
IBUS PI07 H	IH15S1	IJ17S2
IBUS RDI DATA H	IH14R2	IJ17R1
IBUS RDI PULSE L	IH14R1	IJ16R2
IBUS RESERVE L	IH12K2	IJ15K1
IBUS RESET L	IH12K1	IJ14K2

"THIS DRAWING AND SPECIFICATIONS, HEREIN, ARE THE PROPERTY OF DIGITAL EQUIPMENT CORPORATION AND SHALL NOT BE REPRODUCED OR COPIED OR USED IN WHOLE OR IN PART AS THE BASIS FOR THE MANUFACTURE OR SALE OF ITEMS WITHOUT WRITTEN PERMISSION.
COPYRIGHT © 1975, DIGITAL EQUIPMENT CORPORATION"

REVISIONS		
CHK	CHANGE NO.	REV

digital

DRAWN: [illegible] DATE 17-OCT-75
CHK'D: [illegible] DATE 10/20/75
ENG: [illegible] DATE 10/20/75
BOARD LOCATION:
SHEET OF
IBUS(4,426) 14-OCT-75 12:22
FIRST USED ON OPTION/MODEL: KL10
NEXT HIGHER ASSEMBLY: B-DD-KL10-0

TITLE: KL10 I/O BUS CONNECTOR

SIZE	CODE	NUMBER	REV.
D	IC	KL10-0-IBUS	

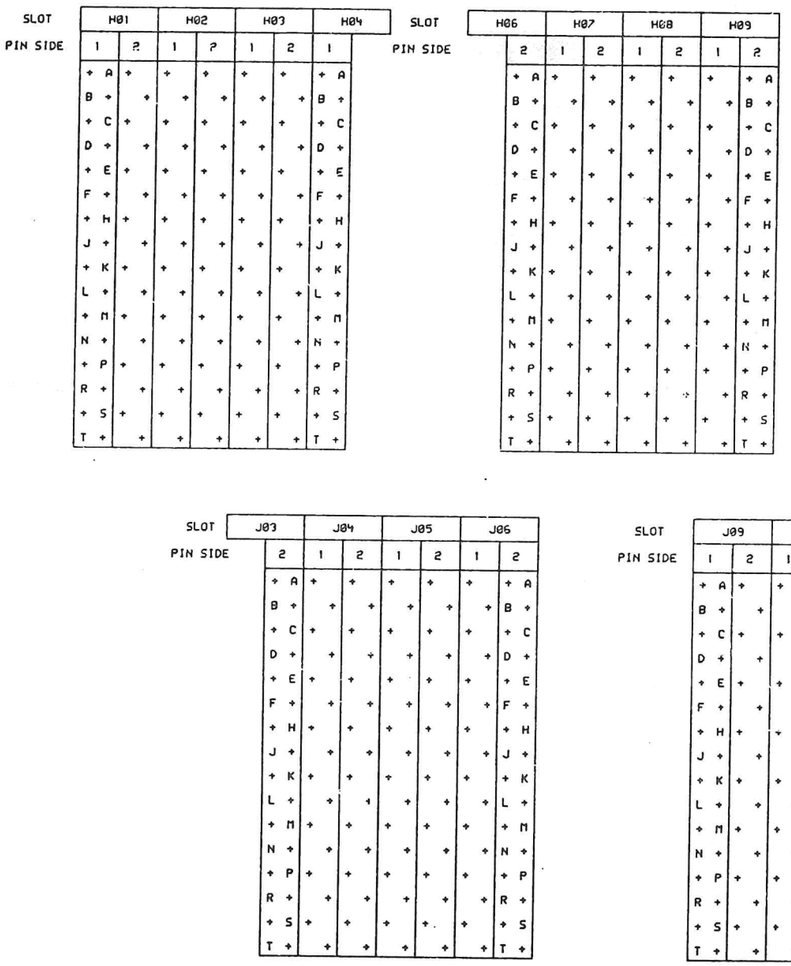

	KBUS0	KBUS1	KBUS2	KBUS3
KBUS"X" ADR ACK (NT) L	1H01A1	1H06A2	1J07A2	1J09A1
KBUS"X" ADR ACK (T) L	1H04C1	1H03C2	1J05C2	1J12C1
KBUS"X" D00 L	1H01K1	1H06K2	1J07K2	1J09K1
KBUS"X" D01 L	1H01K2	1H07K1	1J04K1	1J09K2
KBUS"X" D02 L	1H01L2	1H07L1	1J04L1	1J09L2
KBUS"X" D03 L	1H02L1	1H07L2	1J04L2	1J12L1
KBUS"X" D04 L	1H02K2	1H08K1	1J05K1	1J10K2
KBUS"X" D05 L	1H07K1	1H08K2	1J05K2	1J11K1
KBUS"X" D06 L	1H03L1	1H08L2	1J05L2	1J11L1
KBUS"X" D07 L	1H03L2	1H09L1	1J06L1	1J11L2
KBUS"X" D08 L	1H04K1	1H09K2	1J06K2	1J12K1
KBUS"X" D09 L	1H01M1	1H06M2	1J07M2	1J09M1
KBUS"X" D10 L	1H01M2	1H07M1	1J04M1	1J09M2
KBUS"X" D11 L	1H01N2	1H07N1	1J04N1	1J09N2
KBUS"X" D12 L	1H02N1	1H07N2	1J04N2	1J10N1
KBUS"X" D13 L	1H02M2	1H08M1	1J05M1	1J10M2
KBUS"X" D14 L	1H03M1	1H08M2	1J05M2	1J11M1
KBUS"X" D15 L	1H03N1	1H08N2	1J05N2	1J11N1
KBUS"X" D16 L	1H03N2	1H09N1	1J06N1	1J11N2
KBUS"X" D17 L	1H04M1	1H09M2	1J06M2	1J12M1
KBUS"X" D18 L	1H01P1	1H06P2	1J07P2	1J09P1
KBUS"X" D19 L	1H01P2	1H07P1	1J04P1	1J09P2
KBUS"X" D20 L	1H01R2	1H07R1	1J04R1	1J09R2
KBUS"X" D21 L	1H02P1	1H07R2	1J04R2	1J10R1
KBUS"X" D22 L	1H02P2	1H08P1	1J05P1	1J10P2
KBUS"X" D23 L	1H03P1	1H08P2	1J05P2	1J11P1
KBUS"X" D24 L	1H03R1	1H08R2	1J05R2	1J11R1
KBUS"X" D25 L	1H03R2	1H09R1	1J06R1	1J11R2
KBUS"X" D26 L	1H04P1	1H09P2	1J06P2	1J12P1
KBUS"X" D27 L	1H01S1	1H06S2	1J07S2	1J09S1
KBUS"X" D28 L	1H01S2	1H07S1	1J04S1	1J09S2
KBUS"X" D29 L	1H01T2	1H07T1	1J04T1	1J09T2
KBUS"X" D30 L	1H02T1	1H07T2	1J04T2	1J10T1
KBUS"X" D31 L	1H02S2	1H06S1	1J05S1	1J10S2
KBUS"X" D32 L	1H03S1	1H08S2	1J05S2	1J11S1
KBUS"X" D33 L	1H03T1	1H06T2	1J05T2	1J11T1
KBUS"X" D34 L	1H03T2	1H09T1	1J05T1	1J11T2
KBUS"X" D35 L	1J04S1	1H09S2	1J06S2	1J12S1
KBUS"X" DATA WARNING L	1H04A1	1H09A2	1J06A2	1J12A1
KBUS"X" IGN PAR PULSE L	1H03J2	1H09J1	1J06J1	1J11J2
KBUS"X" MADR 14 L	1H02C2	1H09C1	1J05C1	1J10C2
KBUS"X" MADR 15 L	1H03C1	1H08C2	1J05C2	1J11C1
KBUS"X" MADR 16 L	1H03D1	1H08D2	1J05D2	1J11D1
KBUS"X" MADR 17 L	1H03D2	1H09D1	1J05D1	1J11D2
KBUS"X" MADR 18 L	1H03B2	1H09B1	1J06B1	1J11B2
KBUS"X" MADR 19 L	1H01C1	1H06C2	1J07C2	1J09C1
KBUS"X" MADR 20 L	1H01D2	1H07D1	1J04D1	1J09D2
KBUS"X" MADR 21 L	1H04H1	1H09H2	1J06H2	1J12H1
KBUS"X" MADR 22 L	1H01E1	1H06E2	1J07E2	1J09E1
KBUS"X" MADR 23 L	1H01E2	1H07E1	1J04E1	1J09E2
KBUS"X" MADR 24 L	1H01F2	1H07F1	1J04F1	1J09F2
KBUS"X" MADR 25 L	1H02F1	1H07F2	1J04F2	1J10F1
KBUS"X" MADR 26 L	1H02E2	1H06E1	1J05E1	1J10E2
KBUS"X" MADR 27 L	1H03E1	1H06E2	1J05E2	1J11E1
KBUS"X" MADR 28 L	1H03F1	1H06F2	1J05F2	1J11F1
KBUS"X" MADR 29 L	1H03F2	1H09F1	1J06F1	1J11F2
KBUS"X" MADR 30 L	1H04E1	1H09E2	1J06E2	1J12E1
KBUS"X" MADR 31 L	1H01H1	1H06H2	1J03H2	1J09H1
KBUS"X" MADR 32 L	1H01H2	1H07H1	1J04H1	1J09H2
KBUS"X" MADR 33 L	1H01J2	1H07J1	1J04J1	1J09J2
KBUS"X" MADR 34 L	1H02J1	1H07J2	1J04J2	1J10J1
KBUS"X" MADR 35 L	1H02H2	1H08H1	1J05H1	1J10H2
KBUS"X" MADR RD RQ L	1H03H1	1H08H2	1J05H2	1J11H1
KBUS"X" MADR WR RQ L	1H03J1	1H08J2	1J05J2	1J11J1
KBUS"X" MBD PAR L	1H02B1	1H07B2	1J04B2	1J10B1
KBUS"X" MBI SEQ RQ L	1H02D1	1H07D2	1J04D2	1J10D1
KBUS"X" RD RS L	1H01A2	1H07A1	1J04A1	1J09A2
KBUS"X" RQ CYC FAST L	1H03A1	1H06A2	1J05A2	1J11A1
KBUS"X" RQ CYC IMM L	1H02A2	1H08A1	1J05A1	1J10A2
KBUS"X" RQ CYC SLOW L	1H03B1	1H08B2	1J05B2	1J11B1
KBUS"X" WR RS L	1H01B2	1H07B1	1J04B1	1H09B2

"THIS DRAWING AND SPECIFICATIONS, HEREIN, ARE THE PROPERTY OF DIGITAL EQUIPMENT CORPORATION AND SHALL NOT BE REPRODUCED OR COPIED OR USED IN WHOLE OR IN PART AS THE BASIS FOR THE MANUFACTURE OR SALE OF ITEMS WITHOUT WRITTEN PERMISSION.
COPYRIGHT © 1975, DIGITAL EQUIPMENT CORPORATION"

REVISIONS		
CHK	CHANGE NO.	REV

digital

DRN. | DATE 17-OCT-75 | ENG. | DATE 10/20/75
CHK'D | DATE 10/20/75 | BOARD LOCATION: | SHEET OF
MBUS(4,426) 18-OCT-75 13:47 | NEXT HIGHER ASSEMBLY: B-DD-KL10-0
FIRST USED ON OPTION/MODEL: KL10

TITLE: KL10 MEMORY BUS CONNECTORS

SIZE	CODE	NUMBER	REV.
D	IC	KL10-0-MBUS	

"THIS DRAWING AND SPECIFICATIONS, HEREIN, ARE THE PROPERTY OF DIGITAL EQUIPMENT CORPORATION AND SHALL NOT BE REPRODUCED OR COPIED OR USED IN WHOLE OR IN PART AS THE BASIS FOR THE MANUFACTURE OR SALE OF ITEMS WITHOUT WRITTEN PERMISSION.
COPYRIGHT ©1975 DIGITAL EQUIPMENT CORPORATION"

	1	2	3	4	5	6	7	8	9	10	11	12	13	14	15	16
A–B	BC20C (M9006)															BCIIA (M929)
C–D	BC20C (M9006)	M8563	M8560	M8558	M8558	M8558	M8558	M8558	M8558	M8558	M8558	SPARE	M8550	M8550	M8551	BCIIA (M929)
E–F	SPARE															SPARE

FIRST USED ON OPTION/MODEL	QTY.	DESCRIPTION	PART NO.	ITEM NO.
KLIØ		PARTS LIST		

DIMENSIONAL TOLERANCE

DIMENSIONS ARE MILLIMETERS / INCHES
UNLESS OTHERWISE SPECIFIED

MILLIMETERS	INCHES	ANGLES
X.XX = ±0.10 X.X = ±0.5 X = ±2	.XXX = ±.005 .XX = ±.02 .X = ±.1	±0° 30'

THIRD ANGLE PROJECTION

REMOVE BURRS AND BREAK SHARP CORNERS SURFACE QUALITY ✓

MATERIAL —//—

FINISH —//—

		DATE
DRN.		6-5-75
CHK'D.		6-5-75
ENG.		6-5-75
PROJ. ENG.		
PROD.		

NEXT HIGHER ASSY. D-UA-KLIØ-Ø-Ø

SCALE —//—

SHEET 1 OF 1

digital

TITLE MODULE UTILIZATION BAY 1

SIZE	CODE	NUMBER	REV.
C	MU	KLIØ-Ø-BAY1	

DIST.

REVISIONS | REV. | CHANGE NO. | CHK

DEC FORM NO. DRC 100-B

SIZE C CODE MU NUMBER KLIØ-Ø-BAY1 REV.

REVISION CONTROL SHEET

CUSTOMER PRINT SET	MFG SET	DRAWING NO	NO OF SHT	DESCRIPTION	OPTION NO/FILE DATE	REVISIONS					
			-	MODULE REVISION		A	B	B	C	C	
		D-UA-M8558-Ø-Ø	5	KIIØ MEMORY BUS ADAPTER		-	A	B	C	CI	
		D-CS-M8558-Ø-MAØI	1	KIIØ MEMORY BUS ADAPTER			A	A	B	BI	
		D-CS-M8558 Ø-MAØ2	1	KIIØ MEMORY BUS ADAPTER			A	A	B	BI	
		D-CS-M8558-Ø-MAØ3	1	KIIØ MEMORY BUS ADAPTER			A	A	B	BI	
		D-CS-M8558-Ø-MAØ4	1	KIIØ MEMORY ADAPTER			A	A	B	BI	
		D-CS-M8558-Ø-MAØ5	1	KIIØ MEMORY BUS ADAPTER			A	A	B	BI	
		D-CS-M8558-Ø-MAØ6	1	KI MEM BUS ADPT POWER AND GND			A	A	B	BI	
		K-CO-M8558-Ø-4	1	KIIØ MEMORY BUS ADAPTER		B	B	B	B	B	
		D-AH-M8558-Ø-5	4	KIIØ MEMORY BUS ADAPTER		A	A	A	A	A	
		B-MH-M8558-Ø-6	1	MODULE ECO HISTORY		-	REF			REF	
		5010640	-	ETCH CIRCUIT BOARD		B	B	B	B	B	
		P00-M8558-ØØ		PROCESS SHEET (REF ONLY)		-	-	-	-	-	
										REWORK VERSION	
										RELAYOUT VERSION SEE SHEET 3	
ECO NO						ORIG	00001	00002	00003	MR004	

CUSTOMER PRINT SET CODES
A = PRINT OF DOCUMENT INCLUDED IN PRINT SET
C = INCLUDES ALL PRINTS INDICATED ON DOCUMENT
S = CONFIDENTIAL AUTHORIZED SIGNATURE REQUIRED

TITLE		SIZE	CODE	NUMBER	REV
KIIØ MEMORY BUS ADAPTER	SHEET 2 OF 3	B	DD	M8558-Ø	D

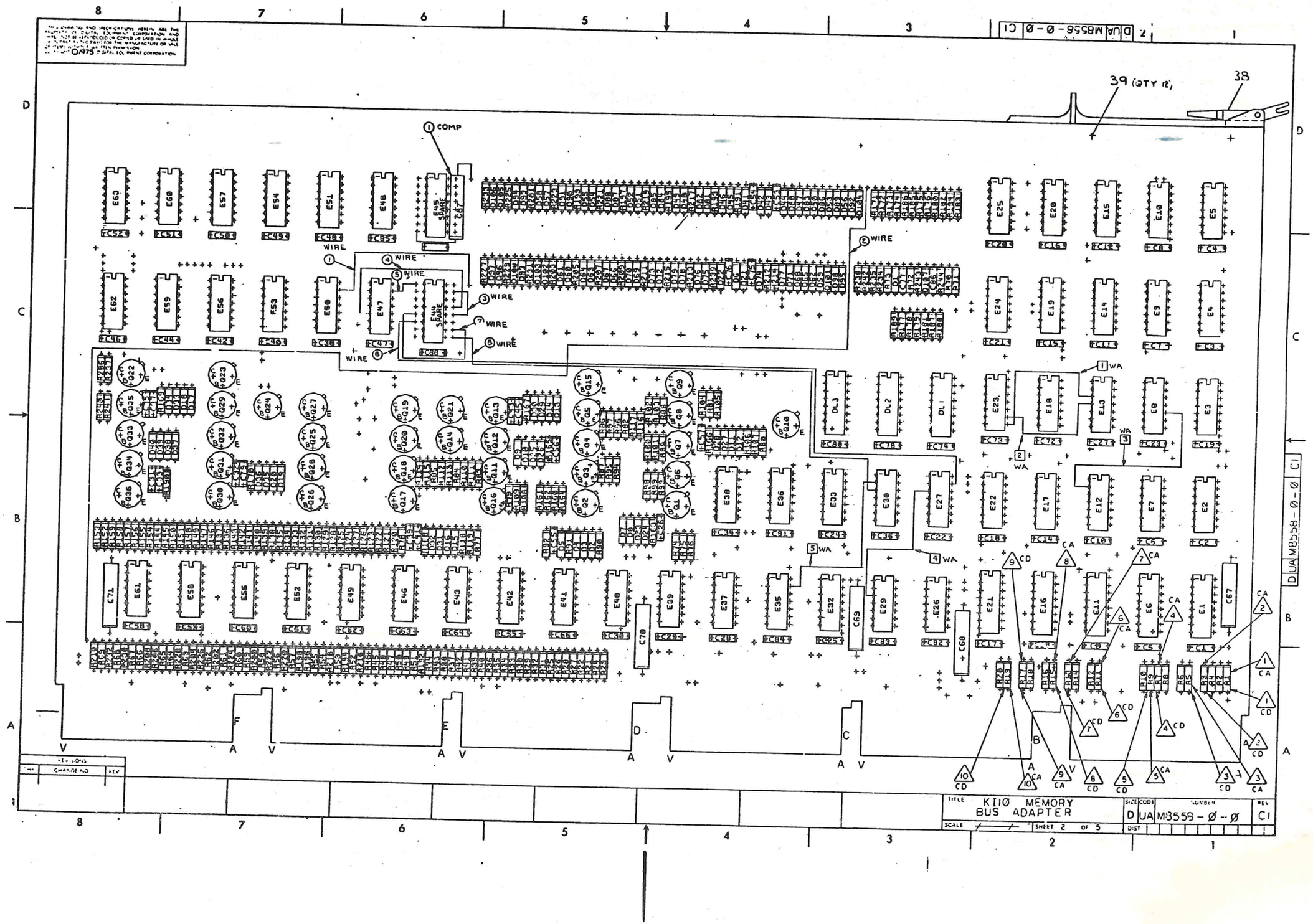
DUA M8558-0-0 C1
39 (QTY 12)
38
1 COMP
WIRE
WIRE
WIRE
WIRE
WIRE
WIRE
WIRE
WIRE
1 WA
2 WA
3 WA
4 WA
5 WA
CD
CA
TITLE KIIØ MEMORY BUS ADAPTER
SCALE
SHEET 2 OF 5
SIZE D
CODE UA
NUMBER M8558-Ø-Ø
REV C1
DIST
REVISIONS
CHANGE NO
REV

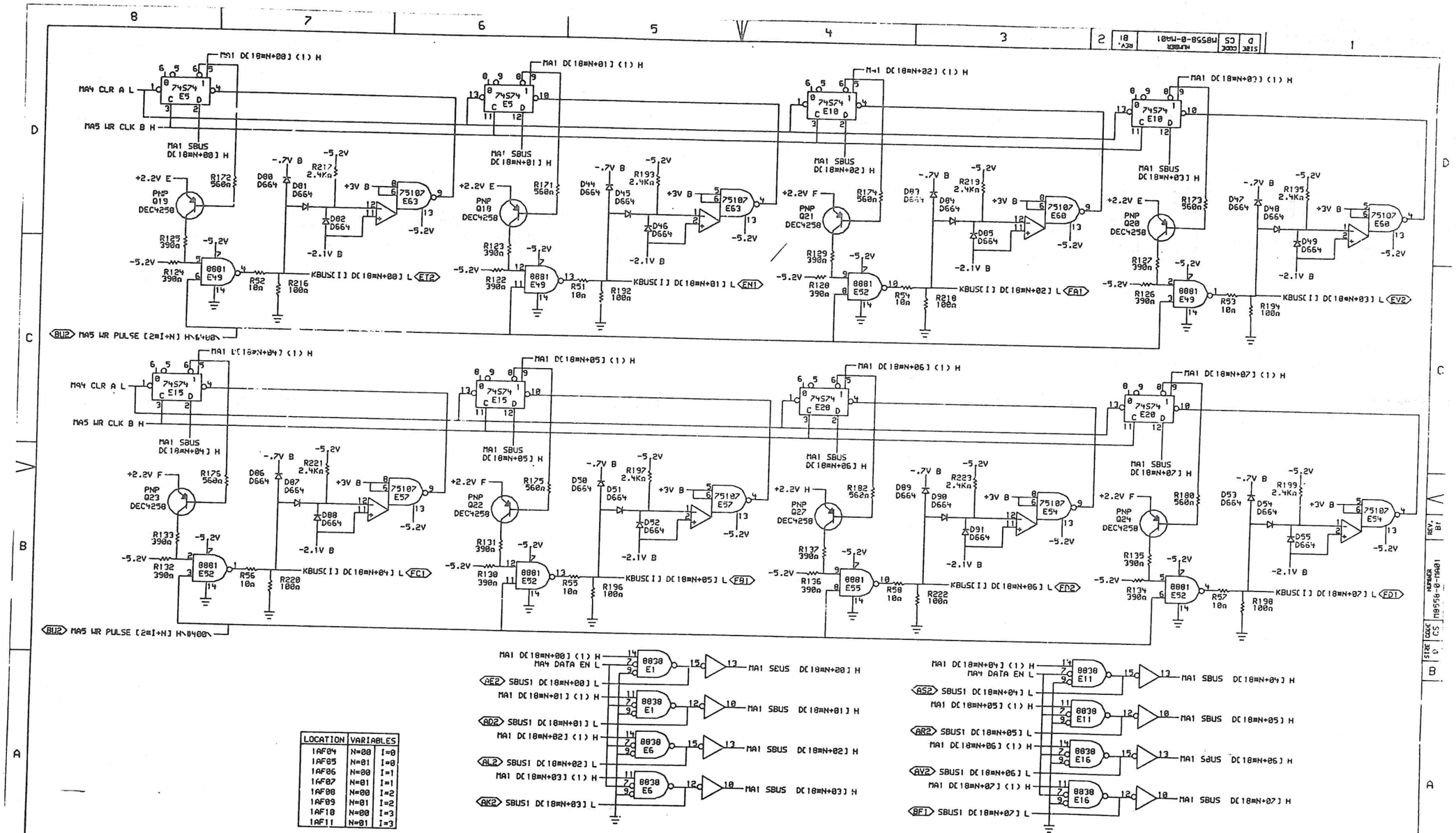

LOCATION	VARIABLES	
1AF04	N=00	I=0
1AF05	N=01	I=0
1AF06	N=00	I=1
1AF07	N=01	I=1
1AF08	N=00	I=2
1AF09	N=01	I=2
1AF10	N=00	I=3
1AF11	N=01	I=3

"THIS DRAWING AND SPECIFICATIONS, HEREIN, ARE THE PROPERTY OF DIGITAL EQUIPMENT CORPORATION AND SHALL NOT BE REPRODUCED OR COPIED OR USED IN WHOLE OR IN PART AS THE BASIS FOR THE MANUFACTURE OR SALE OF ITEMS WITHOUT WRITTEN PERMISSION. COPYRIGHT © 1977, DIGITAL EQUIPMENT CORPORATION"

REVISIONS		
CHK	CHANGE NO.	REV
A.W.	M8558-00003	B

M8558 M0004 B1
17JAN 78
D.LITWINETZ
B.BRUCKERT

1 OF 6

digital

DRW. J. Sorby 27-JAN-77
DATE
CHK D. Litwinetz 1/18/77
DATE
ENG. N. Bruckert 17FEB78
RGORD LOCATION:
SHEET 1 OF 1
NMA01.DRW[4,426] 26-JAN-77 16:50
FIRST USED ON OPTION/MODEL: KL10
NEXT HIGHER ASSEMBLY: B-DD-M8558-0

TITLE: KI MEMORY BUS ADAPTER

SIZE	CODE	NUMBER	REV.
D	CS	M8558-0-MA01	B1

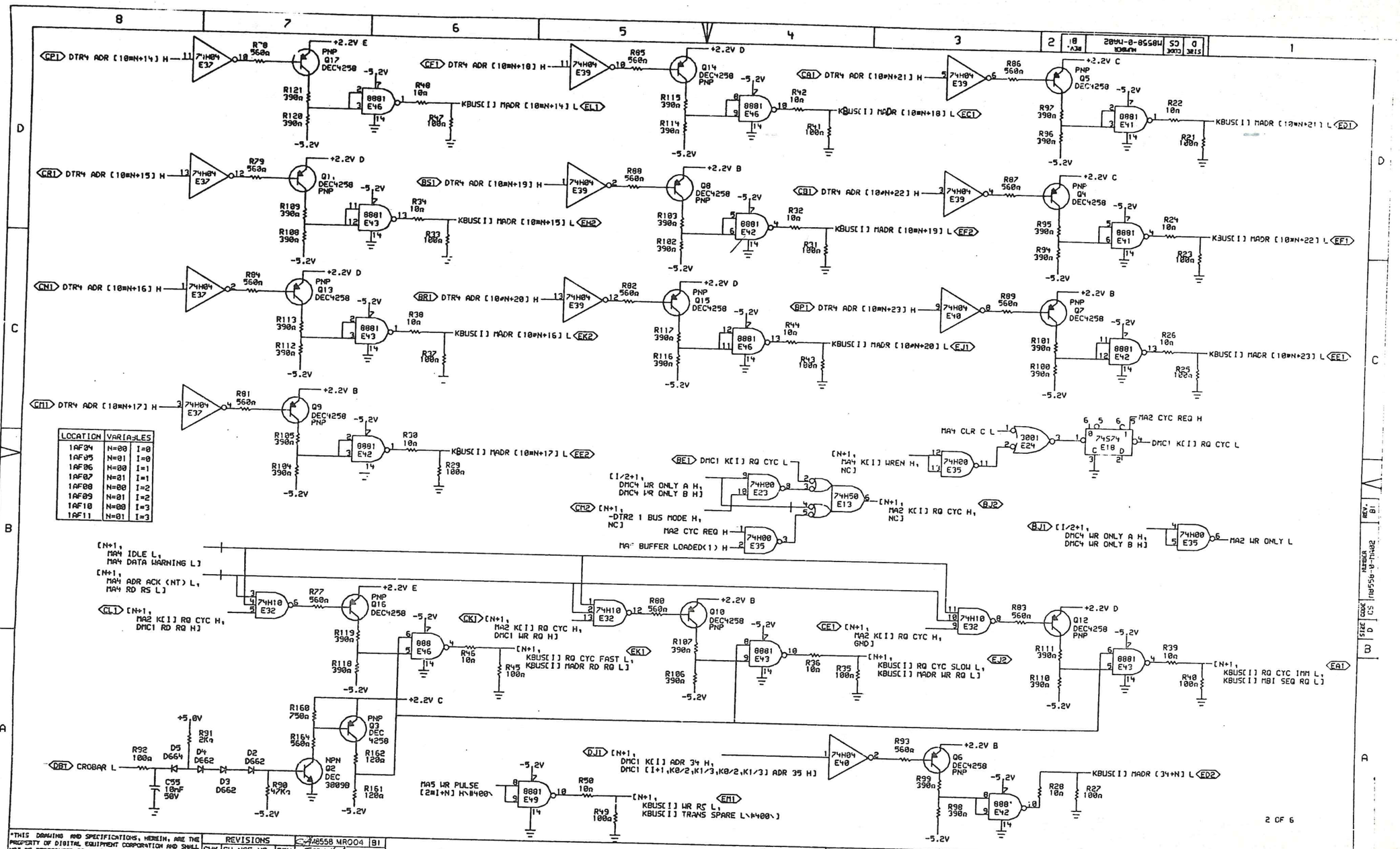

LOCATION	VARIABLES
1AF04	N=00 I=0
1AF05	N=01 I=0
1AF06	N=00 I=1
1AF07	N=01 I=1
1AF08	N=00 I=2
1AF09	N=01 I=2
1AF10	N=00 I=3
1AF11	N=01 I=3

*THIS DRAWING AND SPECIFICATIONS, HEREIN, ARE THE PROPERTY OF DIGITAL EQUIPMENT CORPORATION AND SHALL NOT BE REPRODUCED OR COPIED OR USED IN WHOLE OR IN PART AS THE BASIS FOR THE MANUFACTURE OR SALE OF ITEMS WITHOUT WRITTEN PERMISSION. COPYRIGHT © 1977, DIGITAL EQUIPMENT CORPORATION

REVISIONS

CHK	CHANGE NO.	REV
A.M.	M8558-00031	B

M8558 MR004 B1

D. LITWINETZ

DRW. | DATE 27-JAN-77 | ENG. | DATE 17 FEB 76 | TITLE: KI MEMORY BUS ADAPTER

CHK | DATE 1/13/77 | BOARD LOCATION: | SHEET 1 OF 1

NMA02.DRW(4,426) 20-JAN-77 11:09 | NEXT HIGHER ASSEMBLY:

FIRST USED ON OPTION/MODEL: KL10 | B-DD-M8558-0

SIZE	CODE	NUMBER	REV.
D	CS	M8558-0-MA02	B

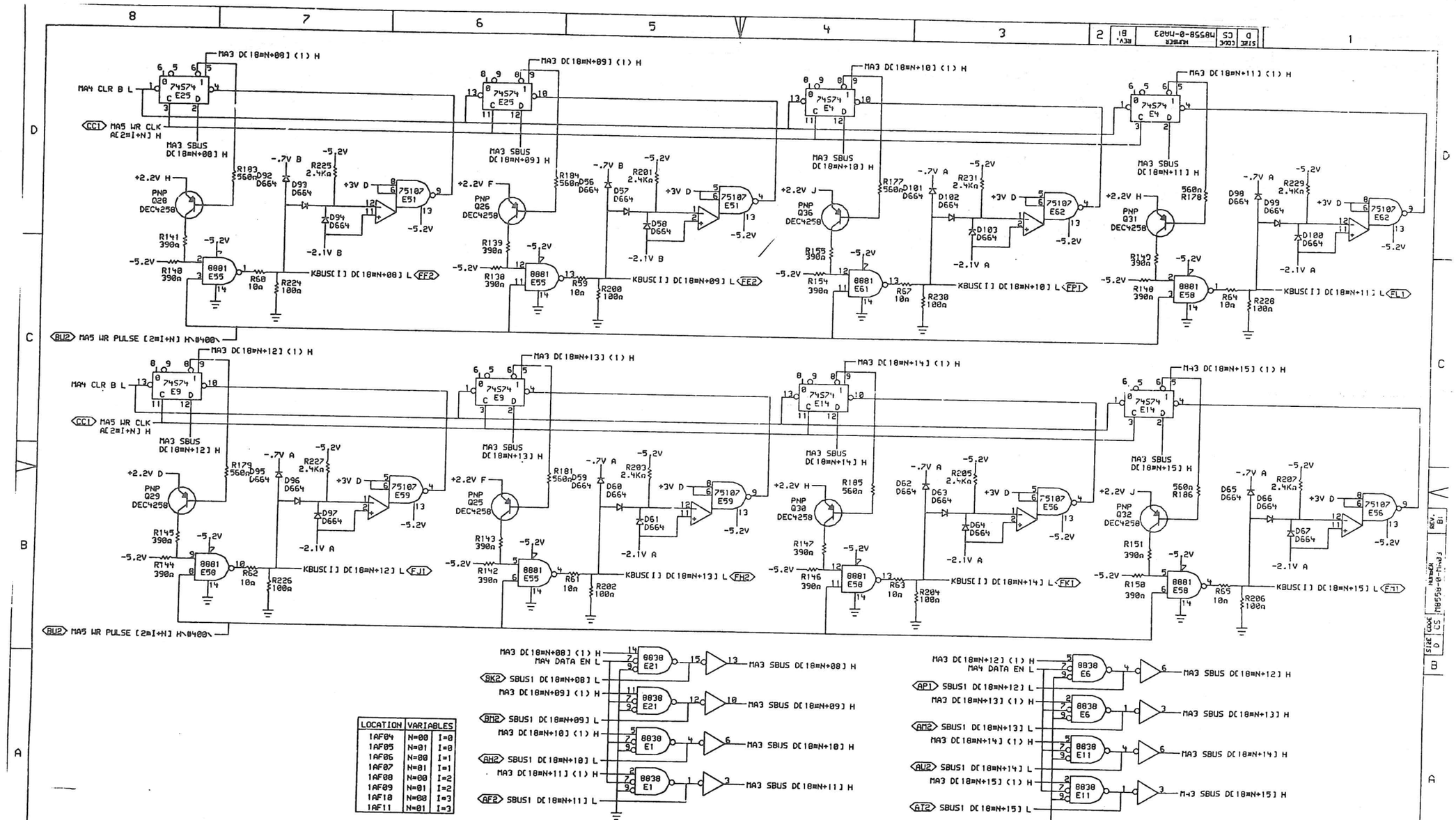

LOCATION	VARIABLES	
1AF04	N=00	I=0
1AF05	N=01	I=0
1AF06	N=00	I=1
1AF07	N=01	I=1
1AF08	N=00	I=2
1AF09	N=01	I=2
1AF10	N=00	I=3
1AF11	N=01	I=3

"THIS DRAWING AND SPECIFICATIONS, HEREIN, ARE THE PROPERTY OF DIGITAL EQUIPMENT CORPORATION AND SHALL NOT BE REPRODUCED OR COPIED OR USED IN WHOLE OR IN PART AS THE BASIS FOR THE MANUFACTURE OR SALE OF ITEMS WITHOUT WRITTEN PERMISSION. COPYRIGHT © 1977, DIGITAL EQUIPMENT CORPORATION"

REVISIONS		
CHK	CHANGE NO.	REV
	M8558-00003	B
	B.BAUCKHT	

M8558 MA004 B1

D LITWINETZ

3 OF 6

DRW. | DATE 25-JAN-77 | ENG. | DATE 17 FEB 76
CHK | DATE 1/27/77 | BOARD LOCATION: | SHEET 1 OF 1
NMA03.DRW[4,426] | 26-JAN-77 16:51 | NEXT HIGHER ASSEMBLY: B-DD-M8558-0
FIRST USED ON OPTION/MODEL: KL10

TITLE: KI MEMORY BUS ADAPTER

SIZE	CODE	NUMBER	REV.
D	CS	M8558-0-MA03	F1

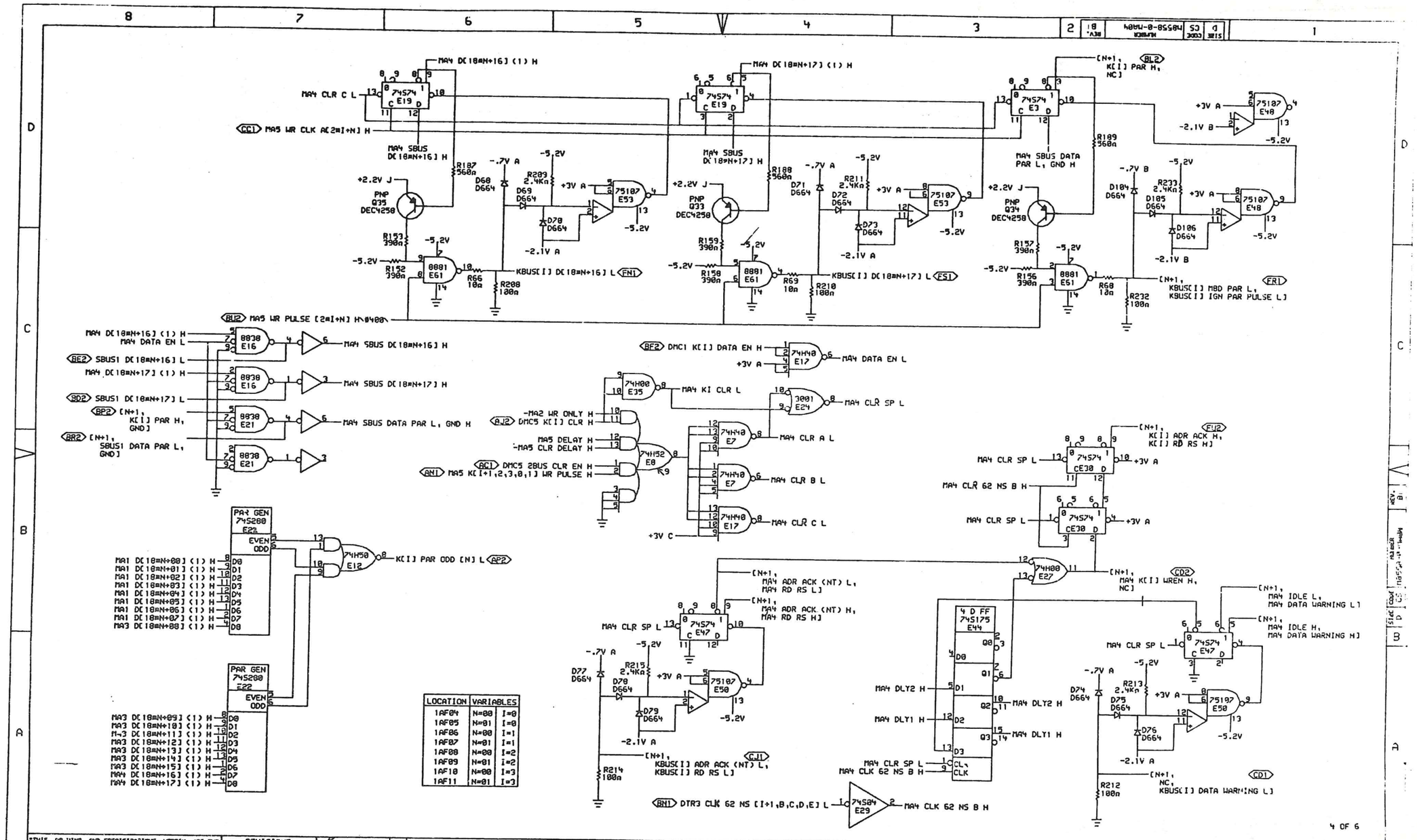

LOCATION	VARIABLES	
1AF04	N=00	I=0
1AF05	N=01	I=0
1AF06	N=00	I=1
1AF07	N=01	I=1
1AF08	N=00	I=2
1AF09	N=01	I=2
1AF10	N=00	I=3
1AF11	N=01	I=3

"THIS DRAWING AND SPECIFICATIONS, HEREIN, ARE THE PROPERTY OF DIGITAL EQUIPMENT CORPORATION AND SHALL NOT BE REPRODUCED OR COPIED OR USED IN WHOLE OR IN PART AS THE BASIS FOR THE MANUFACTURE OR SALE OF ITEMS WITHOUT WRITTEN PERMISSION.
COPYRIGHT © 1977, DIGITAL EQUIPMENT CORPORATION"

REVISIONS		
CH.	CHANGE NO.	REV
A	M8553-C0003	B
B		

M8558 MR004 B1
D. LITWINETZ
B. BRICKERT

DRN.	DATE 27-JAN-77	ENG.	DATE
CHK'D.	DATE	BOARD LOCATION:	
SHEET 1 OF 1			
M:MA04.DRWG4,426]	26-JAN-77 17:54	NEXT HIGHER ASSEMBLY:	
FIRST USED ON OPTION/MODEL: KL10		B-DD-M8558-0	

TITLE: KI MEMORY ADAPNTER

SIZE	CODE	NUMBER	REV.
D	CS	M8558-0-MA04	B1

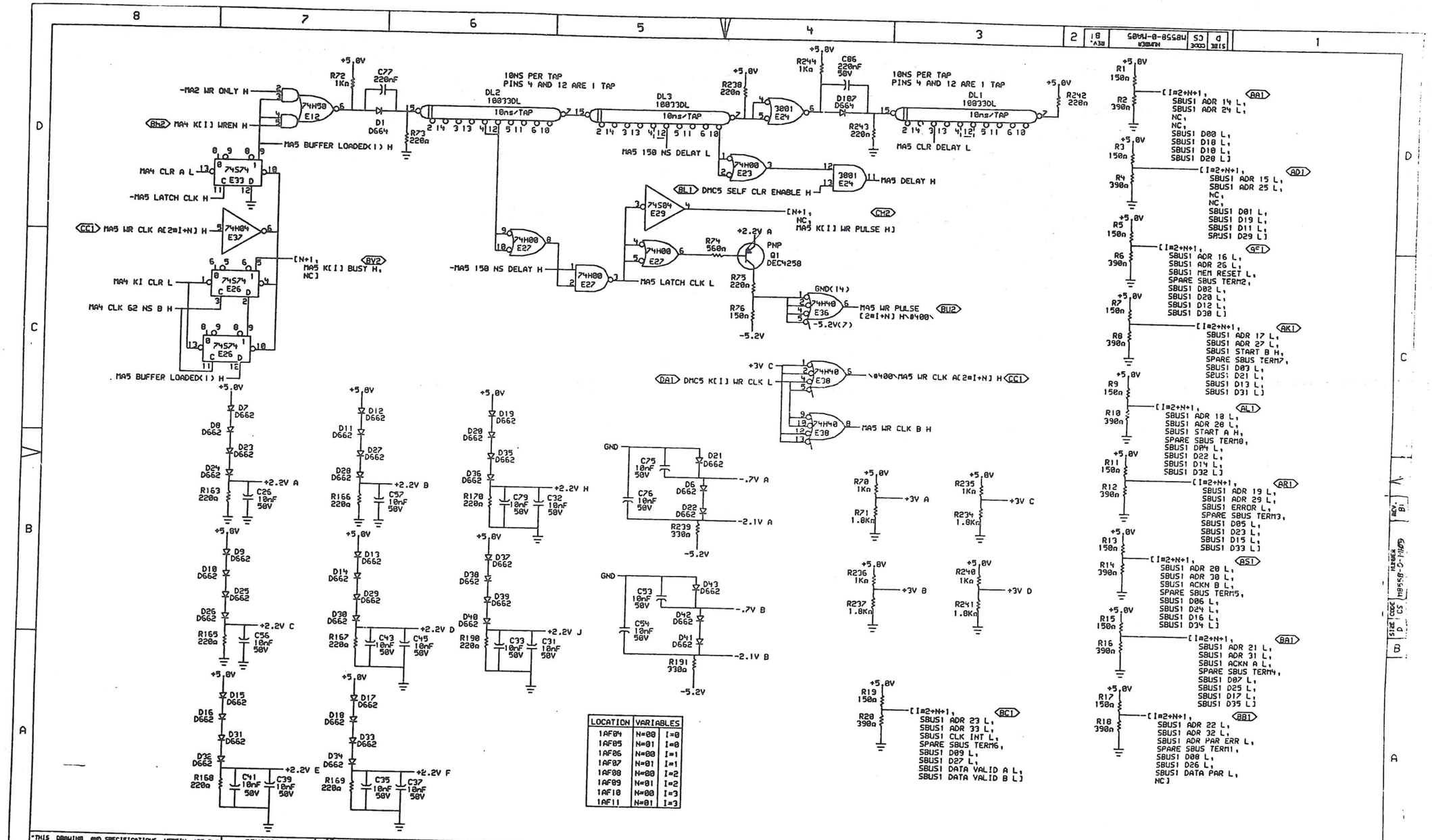

LOCATION	VARIABLES	
1AF04	N=00	I=0
1AF05	N=01	I=0
1AF06	N=00	I=1
1AF07	N=01	I=1
1AF08	N=00	I=2
1AF09	N=01	I=2
1AF10	N=00	I=3
1AF11	N=01	I=3

THIS DRAWING AND SPECIFICATIONS, HEREIN, ARE THE PROPERTY OF DIGITAL EQUIPMENT CORPORATION AND SHALL NOT BE REPRODUCED OR COPIED OR USED IN WHOLE OR IN PART AS THE BASIS FOR THE MANUFACTURE OR SALE OF ITEMS WITHOUT WRITTEN PERMISSION. COPYRIGHT © 1977, DIGITAL EQUIPMENT CORPORATION

REVISIONS		
CHK	CHANGE NO.	REV
WW	M8558-00003	B
B. BRUCKERT		

M8558 WR004 B1
T. McCall 17 FEB 78
D. LITWINETZ
B. Gal. 11/8/77

digital

DRN. D. Loomis DATE 27-JAN-77
CHK. DATE
ENG. W. Bruckert DATE 7 FEB 78
BOARD LOCATION: 1/28/22 SHEET 1 OF 1
NMA05.DRW[4,425] 27-JAN-77 09:54
FIRST USED ON OPTION/MODEL: KL10
NEXT HIGHER ASSEMBLY: B-DD-M8558-0

5 OF 6

TITLE: KI MEMORY BUS ADAPTER

SIZE	CODE	NUMBER	REV.
D	CS	M8558-0-MA05	B1

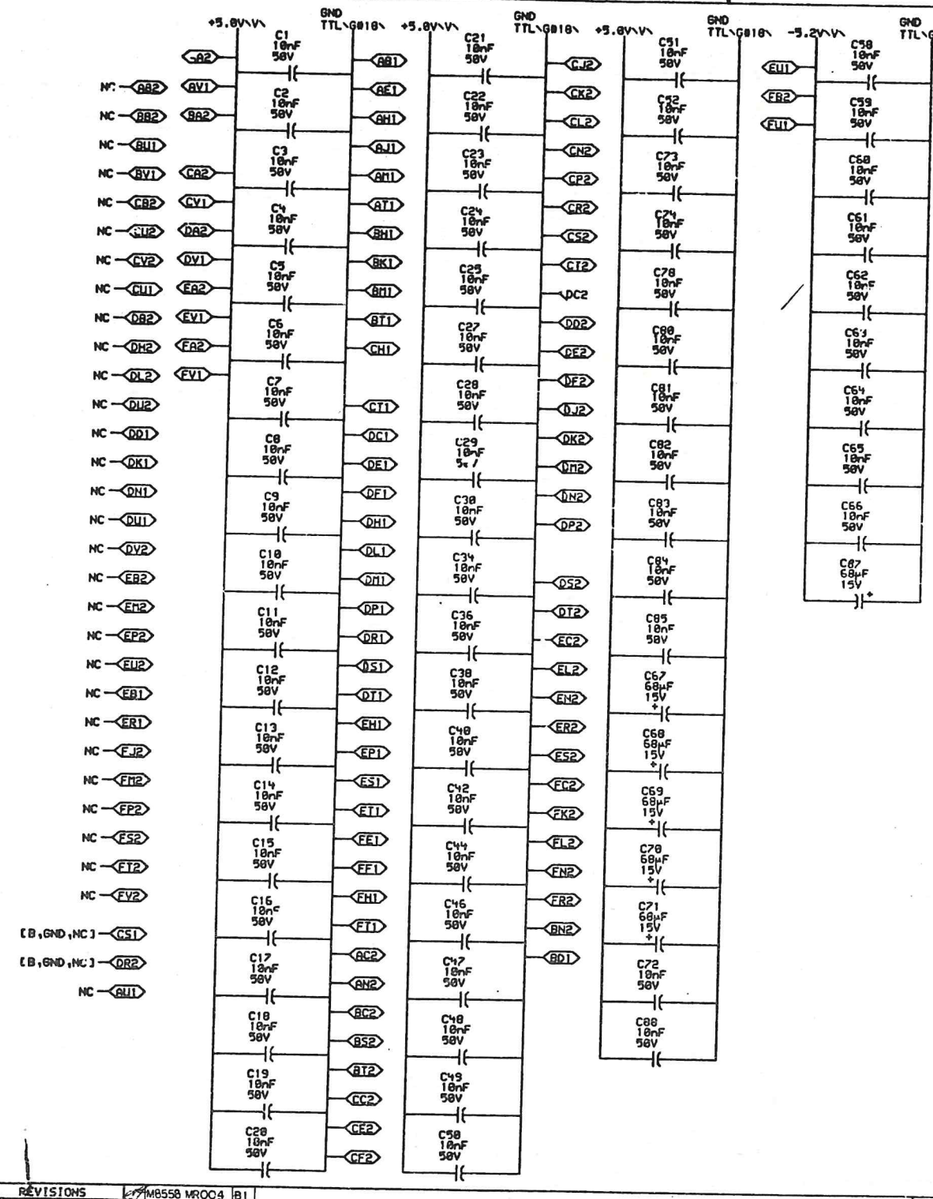

NOTE:

1. ALL 74H SERIES LOGIC IS TO BE 1074H SERIES
2. THE FOLLOWING PIN NUMBERS APPLY TO TTL DIP PACKAGES:

GND	+5.0V	PACKAGE TYPE
8	16	16 PIN DIP
7	14	14 PIN DIP

"THIS DRAWING AND SPECIFICATIONS, HEREIN, ARE THE PROPERTY OF DIGITAL EQUIPMENT CORPORATION AND SHALL NOT BE REPRODUCED OR COPIED OR USED IN WHOLE OR IN PART AS THE BASIS FOR THE MANUFACTURE OR SALE OF ITEMS WITHOUT WRITTEN PERMISSION.
COPYRIGHT © 1977, DIGITAL EQUIPMENT CORPORATION"

REVISIONS		
CHG. CHANGE NO.	REV	
M8558-00003	B	M8558 MR004 B1
		D.LITWINETZ

digital	DR C. Smith	DATE 07-FEB-79	ENG. M. Arnault
	CHK	DATE 1/11/77	BOARD LOCATION: SHEET 1 OF 1
MA06EX.DRW(4,425) 12-JAN-77 16:29			NEXT HIGHER ASSEMBLY: B-DD-M8558-0
FIRST USED ON OPTION/MODEL: KL10			

TITLE: KI MEM BUS ADPT POWER AND GND

SIZE	CODE	NUMBER	REV.
D	CS	M8558-0-MA06	B1

REVISION CONTROL SHEET

CUSTOMER PRINT SET	MFG SET	DRAWING NO	NO OF SHT	DESCRIPTION	OPTION NO/FILE DATE	REVISIONS (NEW LAYOUT VERSION)
			-	MODULE REVISION		D
		D-UA-M8558-Ø-Ø	5	KI1Ø MEMORY BUS ADAPTER		D
		D-CS-M8558-Ø-MAØ1	1	KI1Ø MEMORY BUS ADAPTER		C
		D-CS-M8558-Ø-MAØ2	1	KI1Ø MEMORY BUS ADAPTER		C
		D-CS-M8558-Ø-MAØ3	1	KI1Ø MEMORY BUS ADAPTER		C
		D-CS-M8558-Ø-MAØ4	1	KI1Ø MEMORY ADAPTER		C
		D-CS-M8558-Ø-MAØ5	1	KI1Ø MEMORY BUS ADAPTER		C
		D-CS-M8558-Ø-MAØ6	1	KI MEM BUS ADPT POWER AND GND		C
		K-CO-M8558-Ø-4	1	KI1Ø MEMORY BUS ADAPTER		C
		D-AH-M8558-Ø-5	4	KI1Ø MEMORY BUS ADAPTER		B
		B-MH-M8558-Ø-6	1	MODULE ECO HISTORY		D
		5010640 P00-M8558-ØØ	-	ETCH CIRCUIT BOARD PROCESS SHEET (REF ONLY)		C -
					ECO NO	MR004

CUSTOMER PRINT SET CODES
X = PRINT OF DOCUMENT INCLUDED IN PRINT SET
C = INCLUDES ALL PRINTS INDICATED ON DOCUMENT
S = CONFIDENTIAL AUTHORIZED SIGNATURE REQUIRED

TITLE	SHEET	SIZE	CODE	NUMBER	REV
KL10 MEMORY BUS ADAPTER	3 OF 3	B	DD	M8558-Ø	D

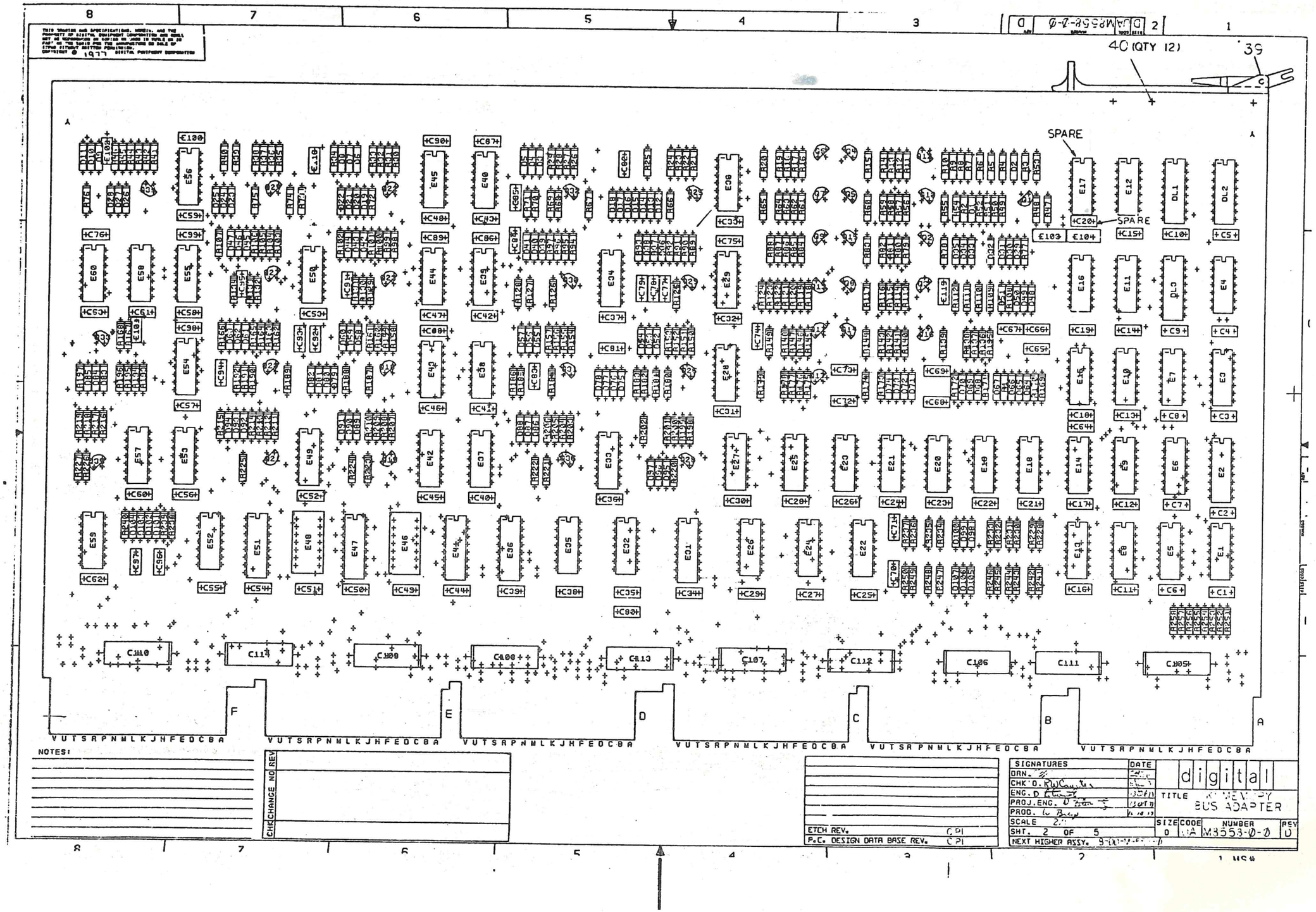
40 (QTY 12)
39
SPARE
SPARE
NOTES:
CHK CHANGE NO REV
ETCH REV.
P.C. DESIGN DATA BASE REV.
SIGNATURES
DATE
DRN.
CHK'D.
ENG.
PROJ.ENG.
PROG.
SCALE
SHT. 2 OF 5
NEXT HIGHER ASSY.
digital
TITLE
BUS ADAPTER
SIZE
CODE
NUMBER
REV
D
M8553-0-0
0

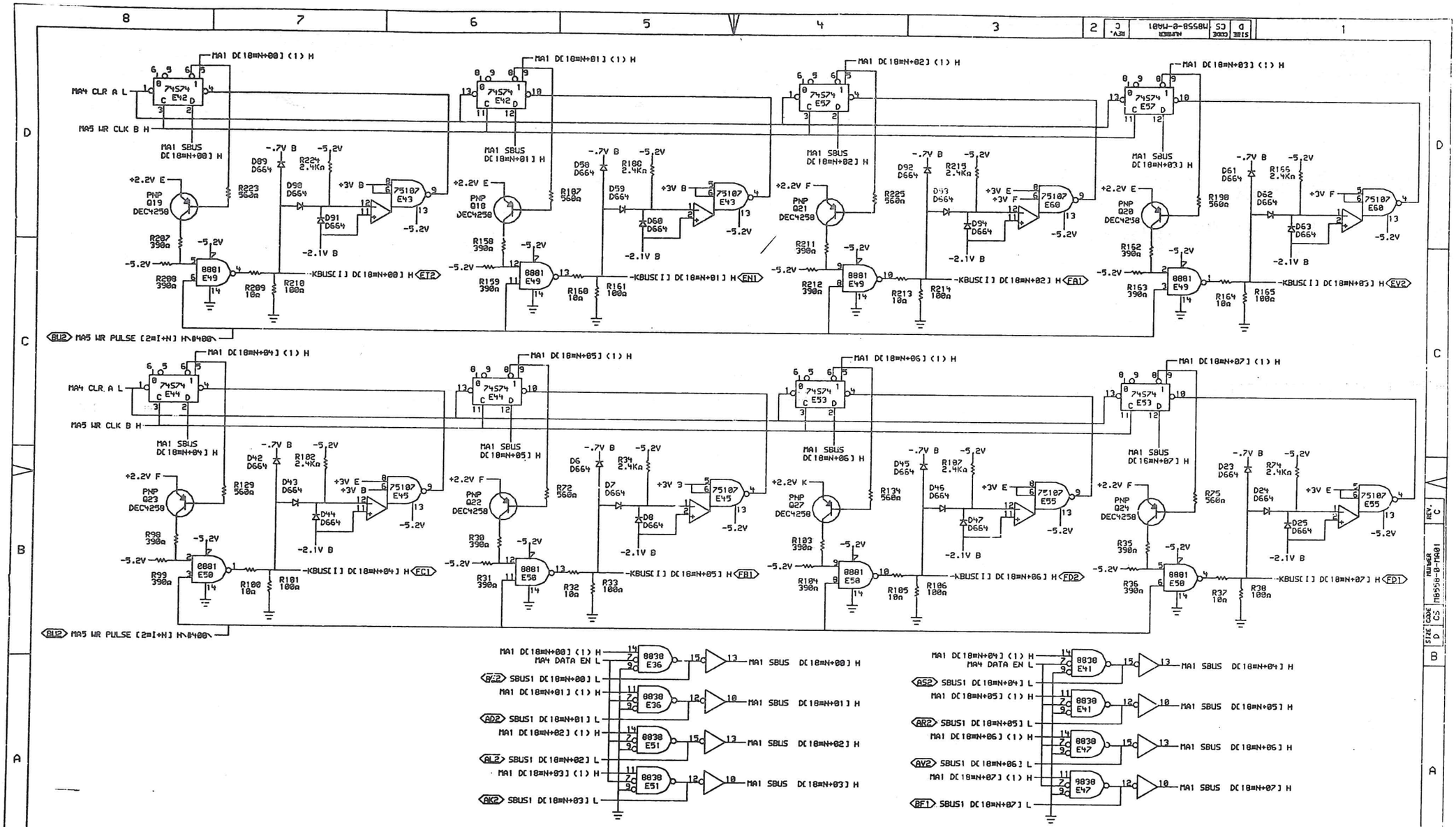

1 OF 6

"THIS DRAWING AND SPECIFICATIONS, HEREIN, ARE THE PROPERTY OF DIGITAL EQUIPMENT CORPORATION AND SHALL NOT BE REPRODUCED OR COPIED OR USED IN WHOLE OR IN PART AS THE BASIS FOR THE MANUFACTURE OR SALE OF ITEMS WITHOUT WRITTEN PERMISSION. COPYRIGHT © 1977, DIGITAL EQUIPMENT CORPORATION"

REVISIONS		
CHK	CHANGE NO.	REV
	M8558 MA009	C
	D. LITWINETZ	

digital

DSN: J. Loomer — DATE 15-AUG-77 — ENG: H. Hurst — DATE 7/20/77
CHK'D: E. Cole — DATE: BOARD LOCATION: SHEET 1 OF 1
MA01ER.DRW(4,621) 05-AUG-77 10:52 — NEXT HIGHER ASSEMBLY: B-DD-M8558-0
FIRST USED ON OPTION/MODEL: KL10

TITLE: KI MEMORY BUS ADAPTER

SIZE	CODE	NUMBER	REV.
D	CS	M8558-0-MA01	C

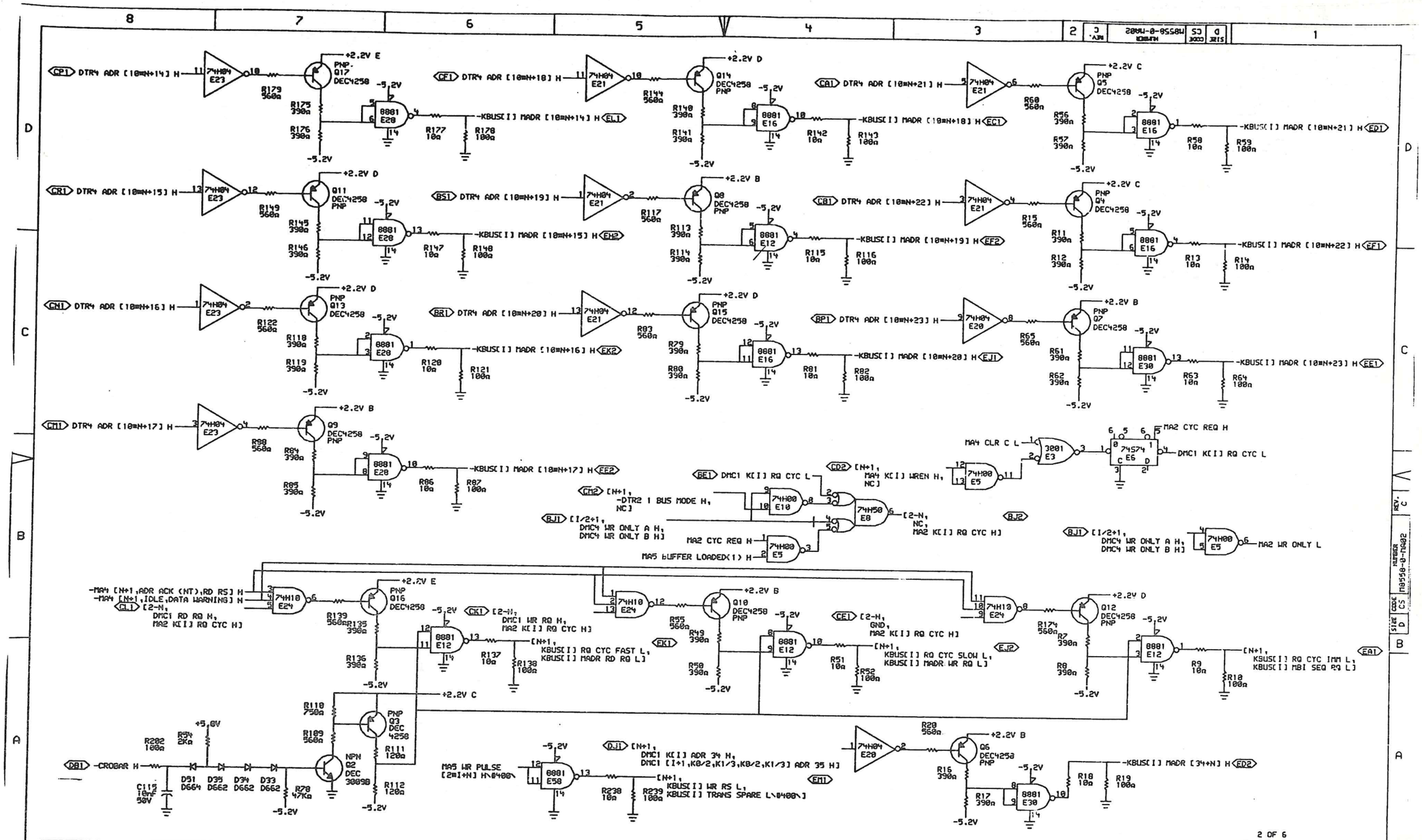

THIS DRAWING AND SPECIFICATIONS, HEREIN, ARE THE PROPERTY OF DIGITAL EQUIPMENT CORPORATION AND SHALL NOT BE REPRODUCED OR COPIED OR USED IN WHOLE OR IN PART AS THE BASIS FOR THE MANUFACTURE OR SALE OF ITEMS WITHOUT WRITTEN PERMISSION. COPYRIGHT © 1977, DIGITAL EQUIPMENT CORPORATION

REVISIONS		
CHK	CHANGE NO.	REV
	M8558 M0009	C
	D.LITWINETZ	

digital

DRN:	DATE 10-AUG-77	ENG	DATE 7/5/77
CHK'D:	DATE	BOARD LOCATION:	
		SHEET 1 OF 1	
MA82ER.DRL[4,621]	10-AUG-77 12:58	NEXT HIGHER ASSEMBLY:	
FIRST USED ON OPTION/MODEL: KL10		B-DD-M8558-0	

TITLE: KI MEMORY BUS ADAPTER

SIZE	CODE	NUMBER	REV.
D	CS	M8558-0-MA02	C

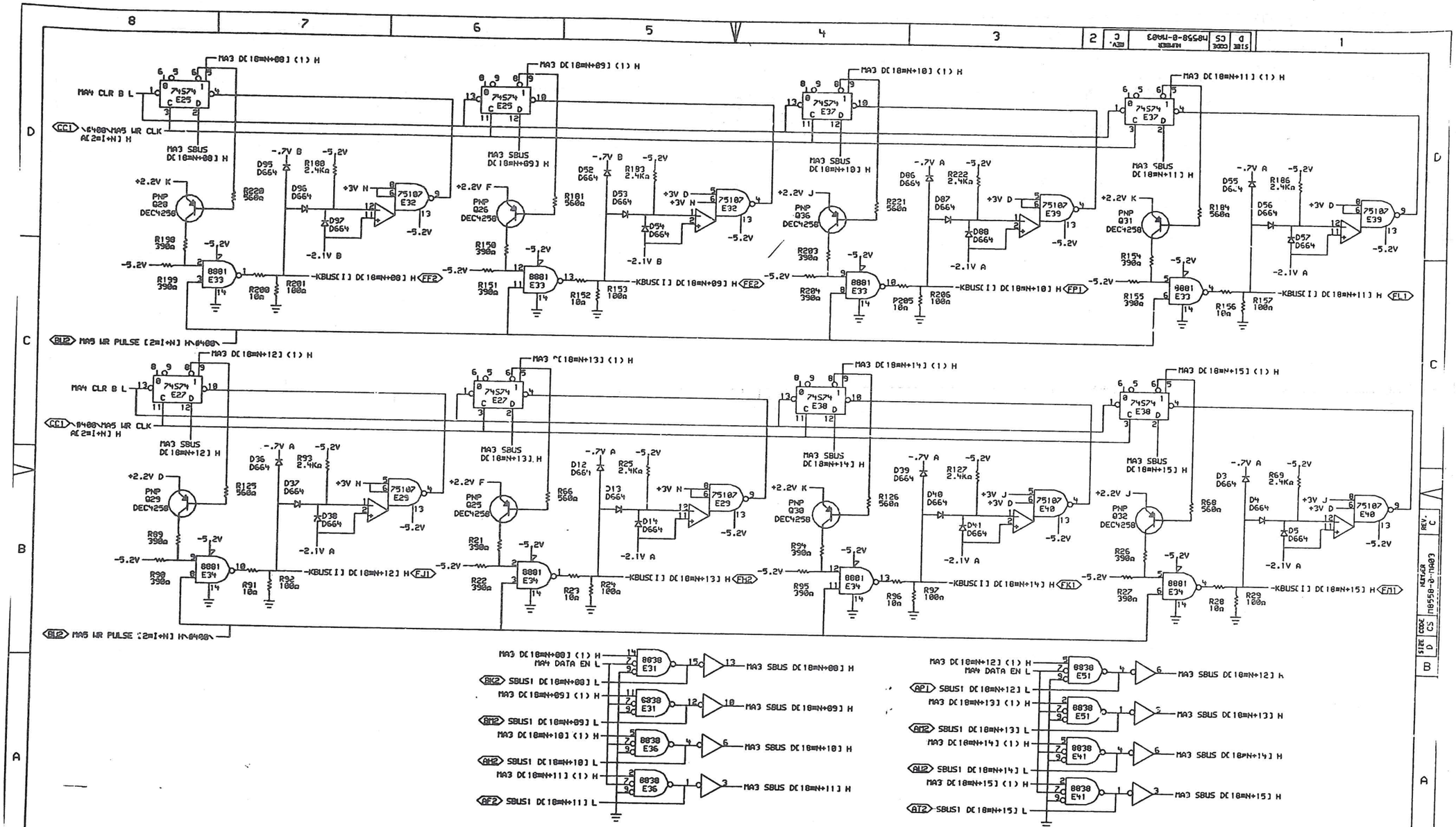

3 OF 6

*THIS DRAWING AND SPECIFICATIONS, HEREIN, ARE THE PROPERTY OF DIGITAL EQUIPMENT CORPORATION AND SHALL NOT BE REPRODUCED OR COPIED OR USED IN WHOLE OR IN PART AS THE BASIS FOR THE MANUFACTURE OR SALE OF ITEMS WITHOUT WRITTEN PERMISSION.
COPYRIGHT © 1977, DIGITAL EQUIPMENT CORPORATION*

REVISIONS		
CHK	CHANGE NO.	REV
	M8558 MR009	C
	17 JAN 78	
	D. LITWINETZ	

DRN. 30-AUG-77 CHK DATE 7/20/77 ENG. DATE 7/20/77 BOARD LOCATION: SHEET 1 OF 1

M8358.DRW[4,621] 24-AUG-77 13:23 NEXT HIGHER ASSEMBLY: B-DD-M8558-0

FIRST USED ON OPTION/MODEL: KL10

TITLE: KI MEMORY BUS ADAPTER

SIZE	CODE	NUMBER	REV.
D	CS	M8558-0-MA03	C

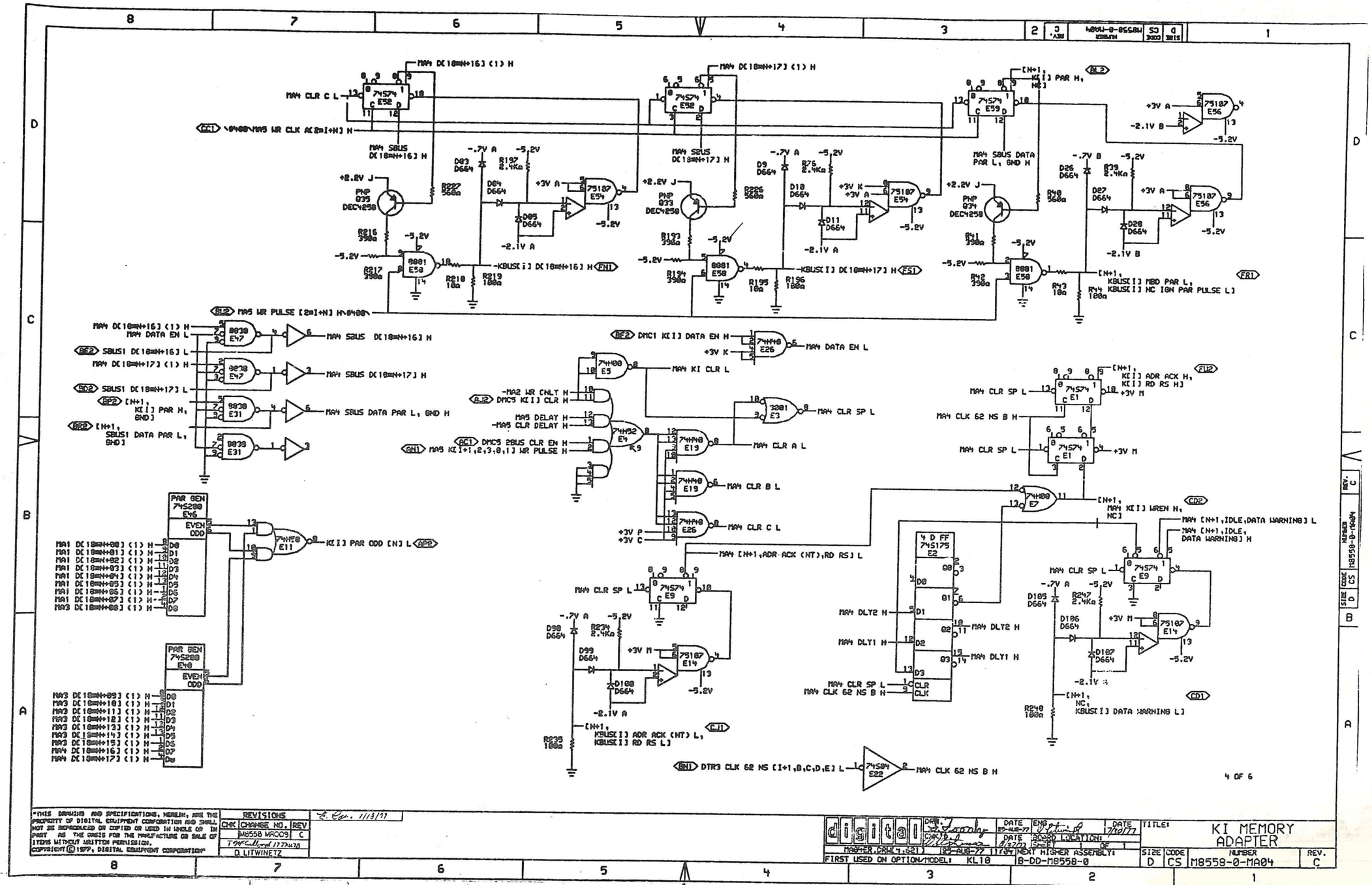

"THIS DRAWING AND SPECIFICATIONS, HEREIN, ARE THE PROPERTY OF DIGITAL EQUIPMENT CORPORATION AND SHALL NOT BE REPRODUCED OR COPIED OR USED IN WHOLE OR IN PART AS THE BASIS FOR THE MANUFACTURE OR SALE OF ITEMS WITHOUT WRITTEN PERMISSION. COPYRIGHT © 1977, DIGITAL EQUIPMENT CORPORATION"

REVISIONS		
CHK	CHANGE NO.	REV
	M8558 MR009	C
D. LITWINETZ		

digital

DRN. | CHK'D | DATE 25-AUG-77 | ENG | DATE 17/10/77 | TITLE: KI MEMORY ADAPTER

MAPPER (DRWG 1,S2) | 25-AUG-77 11:04 | NEXT HIGHER ASSEMBLY: B-DD-M8558-0 | SCALE | LOCATION: SHEET 1 OF 1

FIRST USED ON OPTION/MODEL: KL10

SIZE	CODE	NUMBER	REV.
D	CS	M8558-0-MA04	C

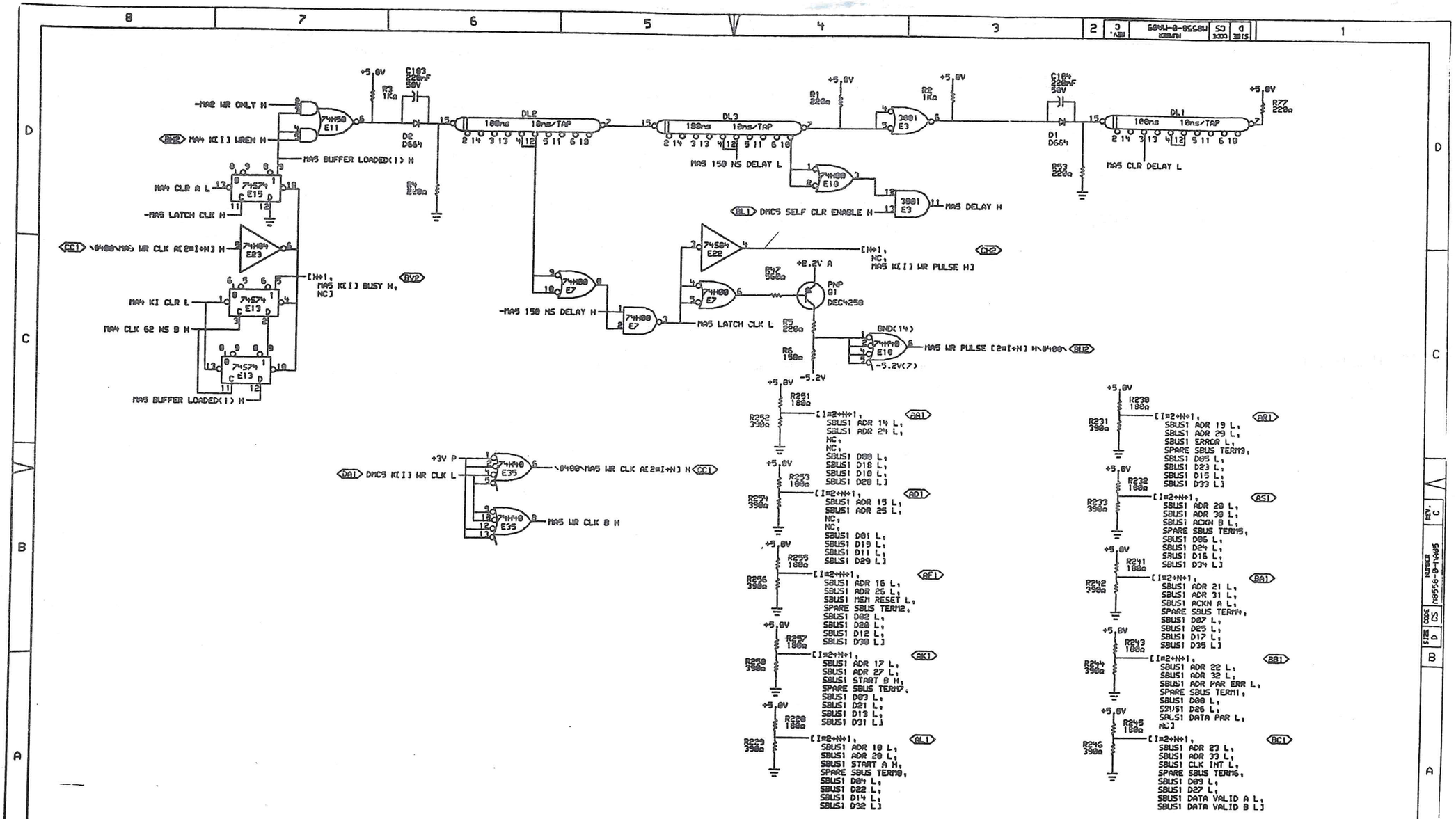

5 OF 6

*THIS DRAWING AND SPECIFICATIONS, HEREIN, ARE THE PROPERTY OF DIGITAL EQUIPMENT CORPORATION AND SHALL NOT BE REPRODUCED OR COPIED OR USED IN WHOLE OR IN PART AS THE BASIS FOR THE MANUFACTURE OR SALE OF ITEMS WITHOUT WRITTEN PERMISSION.
COPYRIGHT © 1977, DIGITAL EQUIPMENT CORPORATION

REVISIONS		
CHK	CHANGE NO.	REV
	M8558WR009	C
D. LITWINETZ		

E. Cano 11/8/77

digital

DRN. | DATE 23-AUG-77 | ENG | DATE 7/20/77 | TITLE: KI MEMORY BUS ADAPTER

HARDER, DRAW 4,521 | 15-AUG-77 13:26 | SCHED LOCATION: SHEET 1 OF 1 | NEXT HIGHER ASSEMBLY: B-DD-M8558-0

FIRST USED ON OPTION/MODEL: KL10

SIZE	CODE	NUMBER	REV.
D	CS	M8558-0-MA05	C

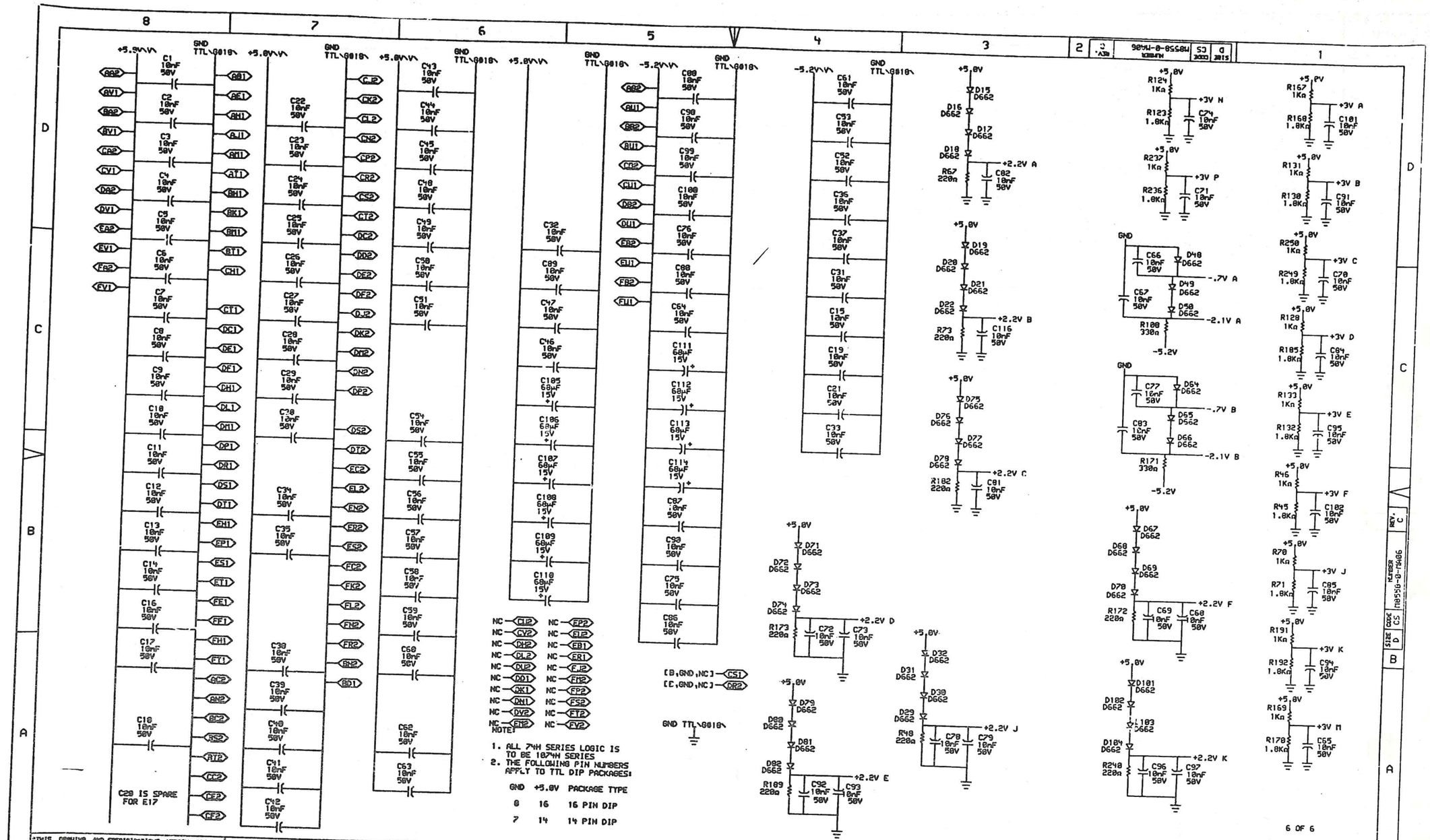
C20 IS SPARE FOR E17
NOTE:
1. ALL 74H SERIES LOGIC IS TO BE 1074H SERIES
2. THE FOLLOWING PIN NUMBERS APPLY TO TTL DIP PACKAGES:
GND +5.0V PACKAGE TYPE
8 16 16 PIN DIP
7 14 14 PIN DIP
6 OF 6
KI MEMORY BUS ADAPTER
M8558-0-MA06
B-DD-M8558-0
FIRST USED ON OPTION/MODEL: K1_10
M8558 MROO9
D. LITWINETZ

REVISION CONTROL SHEET

CUSTOMER PRINT SET	MFG SET	DRAWING NO	NO OF SHT	DESCRIPTION	OPTION NO/FILE DATE	REVISIONS			
			-	MODULE REVISION		A	B	C	C
		D-UA-M856Ø-Ø-Ø	6	SBUS INTERFACE		-	A	B	C
		D-CS-M856Ø-Ø-DTR1	1	DMA TIMING AND SBUS TRANCEIVERS		-	A	B	C
		D-CS-M856Ø-Ø-DTR2	1	DMA TIMING AND SBUS TRANCEIVERS		-	A	A	A
		D-CS-M856Ø-Ø-DTR3	1	DMA TIMING AND SBUS TRANCEIVERS		-	A	B	B
		D-CS-M856Ø-Ø-DTR4	1	DMA TIMING AND SBUS TRANCEIVERS		-	A	A	B
		D-CS-M856Ø-Ø-DTR5	1	DMA TIMING, POWER AND GND		-	A	A	A
		K-CO-M856Ø-Ø-4	1	SBUS INTERFACE (CALDEC DATA BASE)		B	B	B	B
		D-AH-M856Ø-Ø-5	4	SBUS INTERFACE		A	A	A	A
		B-MH-M856Ø-Ø-6	1	MODULE ECO HISTORY		-	REF	–	–
		5010655	-	ETCH CIRCUIT BOARD		B	B	B	B
		P00-M856Ø-ØØ		PROCESS SHEET (REF ONLY)		-	–	–	–

CUSTOMER PRINT SET CODES

X = PRINT OF DOCUMENT INCLUDED IN PRINT SET
C = INCLUDES ALL PRINTS INDICATED ON DOCUMENT
S = CONFIDENTIAL AUTHORIZED SIGNATURE REQUIRED

ECO NO	ORIG	00001	00002	00003

TITLE		SIZE	CODE	NUMBER	REV
SBUS INTERFACE	SHEET 2 OF 2	B	DD	M856Ø-Ø	C

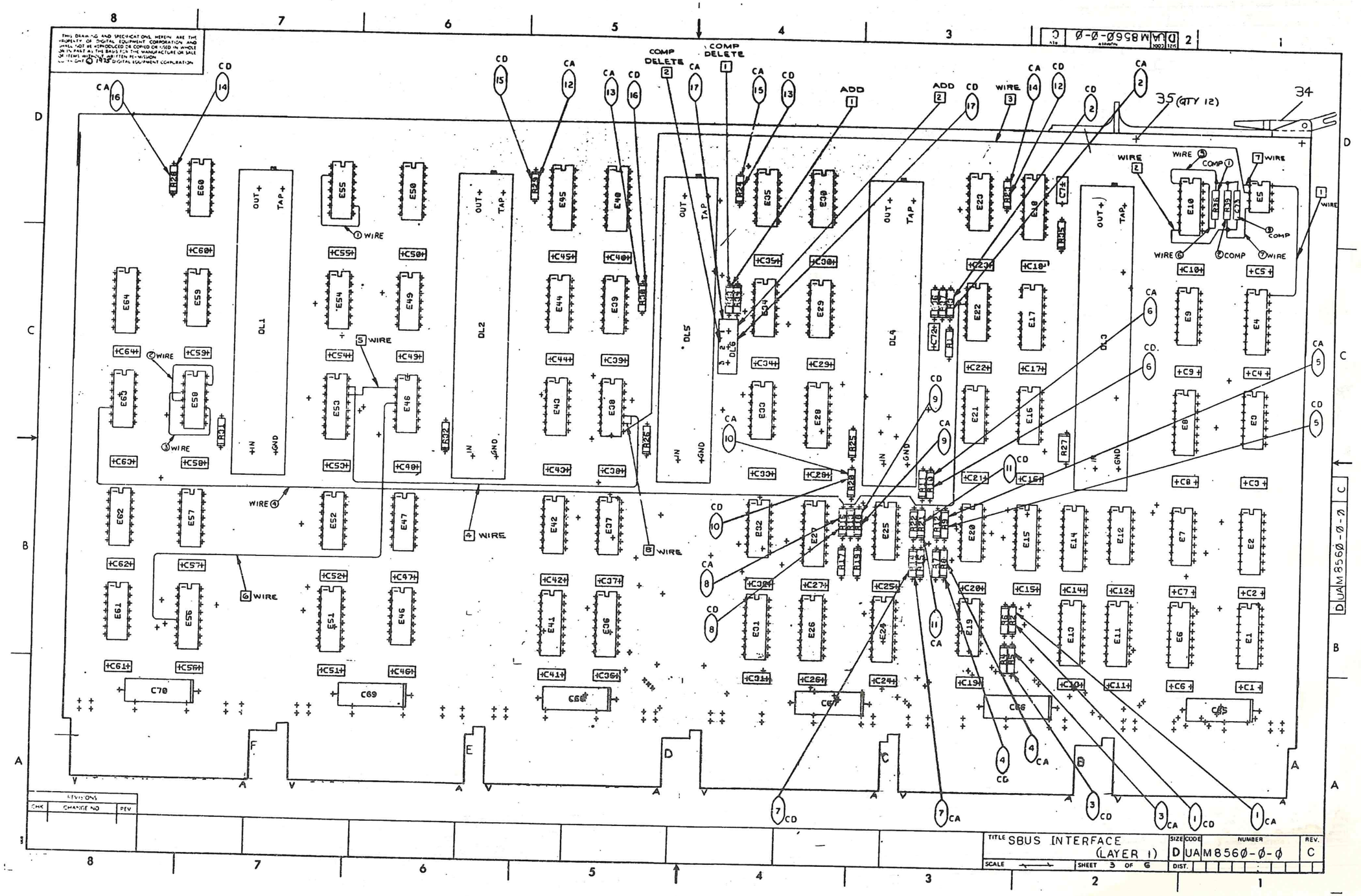
THIS DRAWING AND SPECIFICATIONS, HEREIN ARE THE PROPERTY OF DIGITAL EQUIPMENT CORPORATION AND SHALL NOT BE REPRODUCED OR COPIED OR USED IN WHOLE OR IN PART AS THE BASIS FOR THE MANUFACTURE OR SALE OF ITEMS WITHOUT WRITTEN PERMISSION
COPYRIGHT © 1975 DIGITAL EQUIPMENT CORPORATION
DUAM8560-0-0
COMP DELETE
ADD
WIRE
35 (QTY 12)
34
DL1
DL2
DL3
DL4
DL5
DL6
OUT+
TAP+
+IN
+GND
TITLE SBUS INTERFACE (LAYER 1)
SIZE D
CODE UA
NUMBER M8560-0-0
REV. C
SCALE
SHEET 3 OF 6
DIST.
REVISIONS
CHK
CHANGE NO
REV

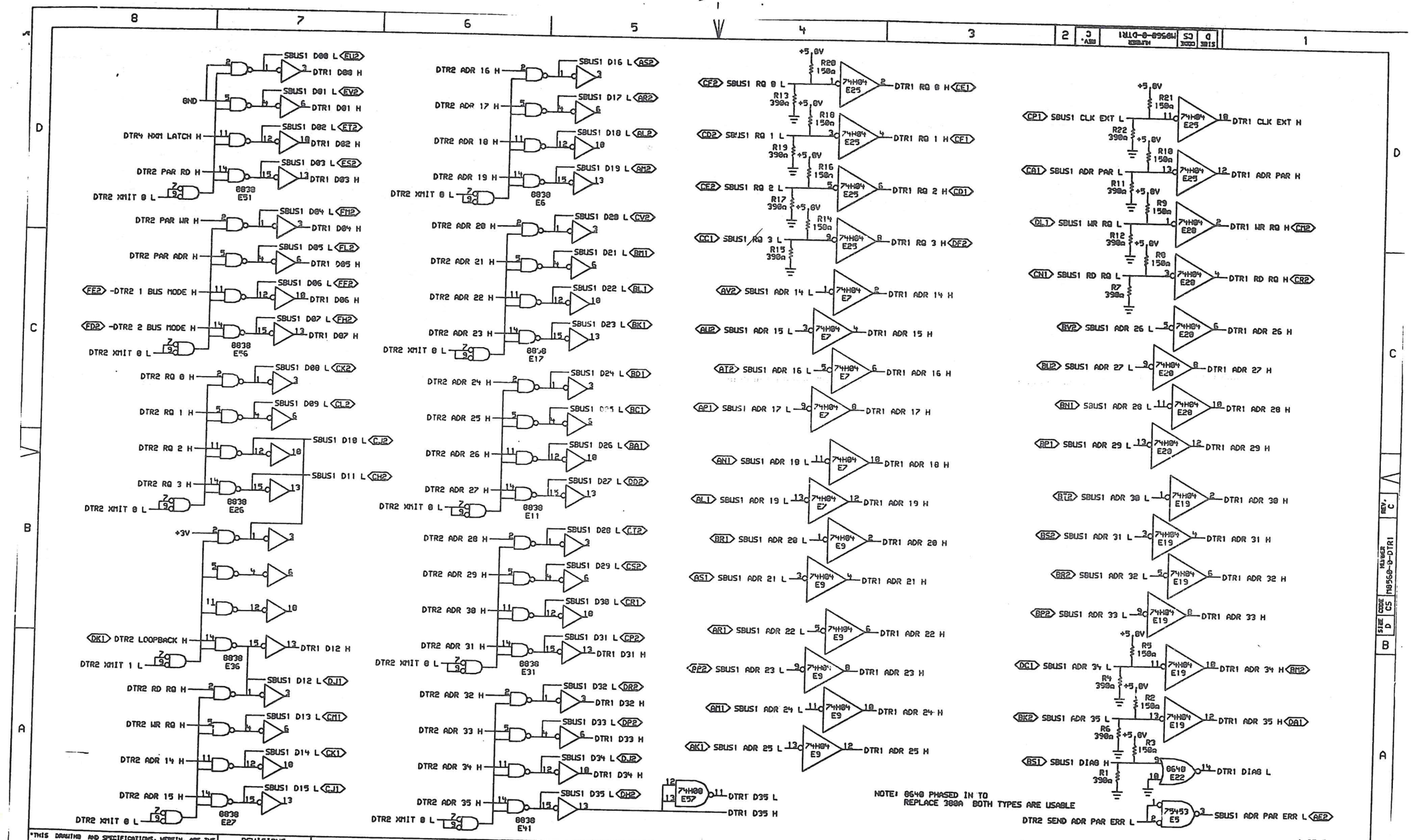
SBUS1 D00 L EU2
DTR1 D00 H
SBUS1 D01 L EV2
DTR1 D01 H
SBUS1 D02 L ET2
DTR1 D02 H
SBUS1 D03 L ES2
DTR1 D03 H
GND
DTR4 NXM LATCH H
DTR2 PAR RD H
DTR2 XMIT 0 L
8830 E51
SBUS1 D04 L FH2
DTR1 D04 H
SBUS1 D05 L FL2
DTR1 D05 H
SBUS1 D06 L FF2
DTR1 D06 H
SBUS1 D07 L FH2
DTR1 D07 H
DTR2 PAR WR H
DTR2 PAR ADR H
FE2 -DTR2 1 BUS MODE H
FD2 -DTR2 2 BUS MODE H
8830 E56
SBUS1 D08 L CK2
SBUS1 D09 L CL2
SBUS1 D10 L CJ2
SBUS1 D11 L CH2
DTR2 RQ 0 H
DTR2 RQ 1 H
DTR2 RQ 2 H
DTR2 RQ 3 H
8830 E26
+3V
DK1 DTR2 LOOPBACK H
DTR2 XMIT 1 L
DTR1 D12 H
SBUS1 D12 L DJ1
DTR2 RD RQ H
SBUS1 D13 L CM1
DTR2 WR RQ H
SBUS1 D14 L CK1
DTR2 ADR 14 H
SBUS1 D15 L CJ1
DTR2 ADR 15 H
8830 E27
SBUS1 D16 L AS2
DTR2 ADR 16 H
SBUS1 D17 L AR2
DTR2 ADR 17 H
SBUS1 D18 L AL2
DTR2 ADR 18 H
SBUS1 D19 L AM2
DTR2 ADR 19 H
8830 E6
SBUS1 D20 L CV2
DTR2 ADR 20 H
SBUS1 D21 L BM1
DTR2 ADR 21 H
SBUS1 D22 L BL1
DTR2 ADR 22 H
SBUS1 D23 L BK1
DTR2 ADR 23 H
8830 E17
SBUS1 D24 L BD1
DTR2 ADR 24 H
SBUS1 D25 L BC1
DTR2 ADR 25 H
SBUS1 D26 L BA1
DTR2 ADR 26 H
SBUS1 D27 L DD2
DTR2 ADR 27 H
8830 E11
SBUS1 D28 L CT2
DTR2 ADR 28 H
SBUS1 D29 L CS2
DTR2 ADR 29 H
SBUS1 D30 L CR1
DTR2 ADR 30 H
SBUS1 D31 L CP2
DTR2 ADR 31 H
8830 E31
SBUS1 D32 L DR2
DTR1 D32 H
SBUS1 D33 L DP2
DTR1 D33 H
SBUS1 D34 L DJ2
DTR1 D34 H
SBUS1 D35 L DH2
DTR2 ADR 32 H
DTR2 ADR 33 H
DTR2 ADR 34 H
DTR2 ADR 35 H
8830 E41
74H00 E57
DTRT D35 L
DTR1 D35 H
+5.0V
R20 150Ω
CF2 SBUS1 RQ 0 L
R13 390Ω
R18 150Ω
74H04 E25
DTR1 RQ 0 H CE1
CD2 SBUS1 RQ 1 L
R19 390Ω
R16 150Ω
DTR1 RQ 1 H CF1
CE2 SBUS1 RQ 2 L
R17 390Ω
R14 150Ω
DTR1 RQ 2 H CD1
CC1 SBUS1 RQ 3 L
R15 390Ω
DTR1 RQ 3 H DF2
AV2 SBUS1 ADR 14 L
74H04 E7
DTR1 ADR 14 H
AU2 SBUS1 ADR 15 L
DTR1 ADR 15 H
AT2 SBUS1 ADR 16 L
DTR1 ADR 16 H
AP1 SBUS1 ADR 17 L
DTR1 ADR 17 H
AN1 SBUS1 ADR 18 L
DTR1 ADR 18 H
AL1 SBUS1 ADR 19 L
DTR1 ADR 19 H
BR1 SBUS1 ADR 20 L
74H04 E9
DTR1 ADR 20 H
AS1 SBUS1 ADR 21 L
DTR1 ADR 21 H
AR1 SBUS1 ADR 22 L
DTR1 ADR 22 H
BP2 SBUS1 ADR 23 L
DTR1 ADR 23 H
BM1 SBUS1 ADR 24 L
DTR1 ADR 24 H
BK1 SBUS1 ADR 25 L
DTR1 ADR 25 H
R21 150Ω
CP1 SBUS1 CLK EXT L
R22 390Ω
DTR1 CLK EXT H
CA1 SBUS1 ADR PAR L
R11 390Ω
R9 150Ω
DL1 SBUS1 WR RQ L
R12 390Ω
R8 150Ω
CN1 SBUS1 RD RQ L
R7 390Ω
DTR1 WR RQ H CM2
DTR1 RD RQ H CR2
BV2 SBUS1 ADR 26 L
DTR1 ADR 26 H
BU2 SBUS1 ADR 27 L
DTR1 ADR 27 H
BN1 SBUS1 ADR 28 L
DTR1 ADR 28 H
BP1 SBUS1 ADR 29 L
DTR1 ADR 29 H
BT2 SBUS1 ADR 30 L
74H04 E19
DTR1 ADR 30 H
BS2 SBUS1 ADR 31 L
DTR1 ADR 31 H
BR2 SBUS1 ADR 32 L
DTR1 ADR 32 H
BP2 SBUS1 ADR 33 L
DTR1 ADR 33 H
R5 150Ω
DC1 SBUS1 ADR 34 L
R4 390Ω
DTR1 ADR 34 H BM2
R2 150Ω
BK2 SBUS1 ADR 35 L
R6 390Ω
R3 150Ω
DTR1 ADR 35 H DA1
BS1 SBUS1 DIAG H
R1 390Ω
8640 E22
DTR1 DIAG L
DTR2 SEND ADR PAR ERR L
75453 E5
SBUS1 ADR PAR ERR L AE2
NOTE: 8640 PHASED IN TO REPLACE 380A BOTH TYPES ARE USABLE
1 OF 5
REVISIONS
CHK CHANGE NO. REV
— M8560-00003 C
B.BLICKET
"THIS DRAWING AND SPECIFICATIONS, HEREIN, ARE THE PROPERTY OF DIGITAL EQUIPMENT CORPORATION AND SHALL NOT BE REPRODUCED OR COPIED OR USED IN WHOLE OR IN PART AS THE BASIS FOR THE MANUFACTURE OR SALE OF ITEMS WITHOUT WRITTEN PERMISSION.
COPYRIGHT © 1977, DIGITAL EQUIPMENT CORPORATION"
digital
DRN. 10-AUG-77
DATE
ENG.
DATE 11 AUG 77
TITLE: DMA TIMING AND SBUS TRANCEIVERS
DTR1EX.DRW(4.623) 11-AUG-77 13:46
FIRST USED ON OPTION/MODEL: DMA20
NEXT HIGHER ASSEMBLY: B-DD-M8560-0
SIZE D
CODE CS
NUMBER M8560-0-DTR1
REV. C

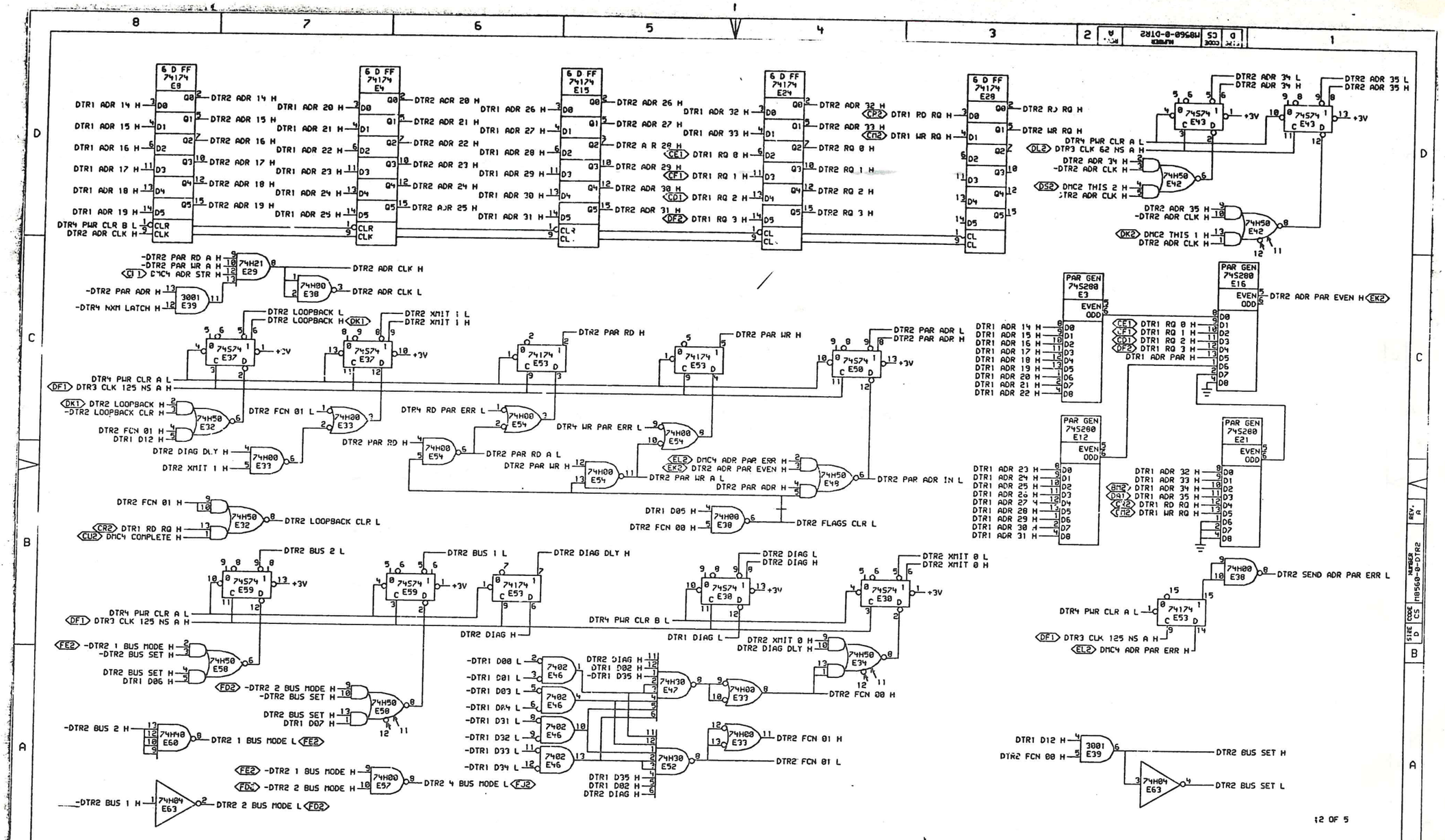

"THIS DRAWING AND SPECIFICATIONS, HEREIN, ARE THE PROPERTY OF DIGITAL EQUIPMENT CORPORATION AND SHALL NOT BE REPRODUCED OR COPIED OR USED IN WHOLE OR IN PART AS THE BASIS FOR THE MANUFACTURE OR SALE OF ITEMS WITHOUT WRITTEN PERMISSION.
COPYRIGHT © 1979, DIGITAL EQUIPMENT CORPORATION"

REVISIONS		
CHK	CHANGE NO.	REV
	M8560-00001	A
	W. BRUCKERT	

digital

DRW.	DATE	ENG.	DATE	TITLE:
J. Fowler	5/27/75		6/4/75	DMA TIMING AND SBUS TRANCEIVERS
	DATE	BOARD LOCATION: 1AF83		
	5/27/75	SHEET 1 OF 1		

DTR2EX(4,426) 13-MAY-75 08:33 NEXT HIGHER ASSEMBLY:

FIRST USED ON OPTION/MODEL: DMA20 B-DD-M8560-0

SIZE	CODE	NUMBER	REV.
D	CS	M8560-0-DTR2	A

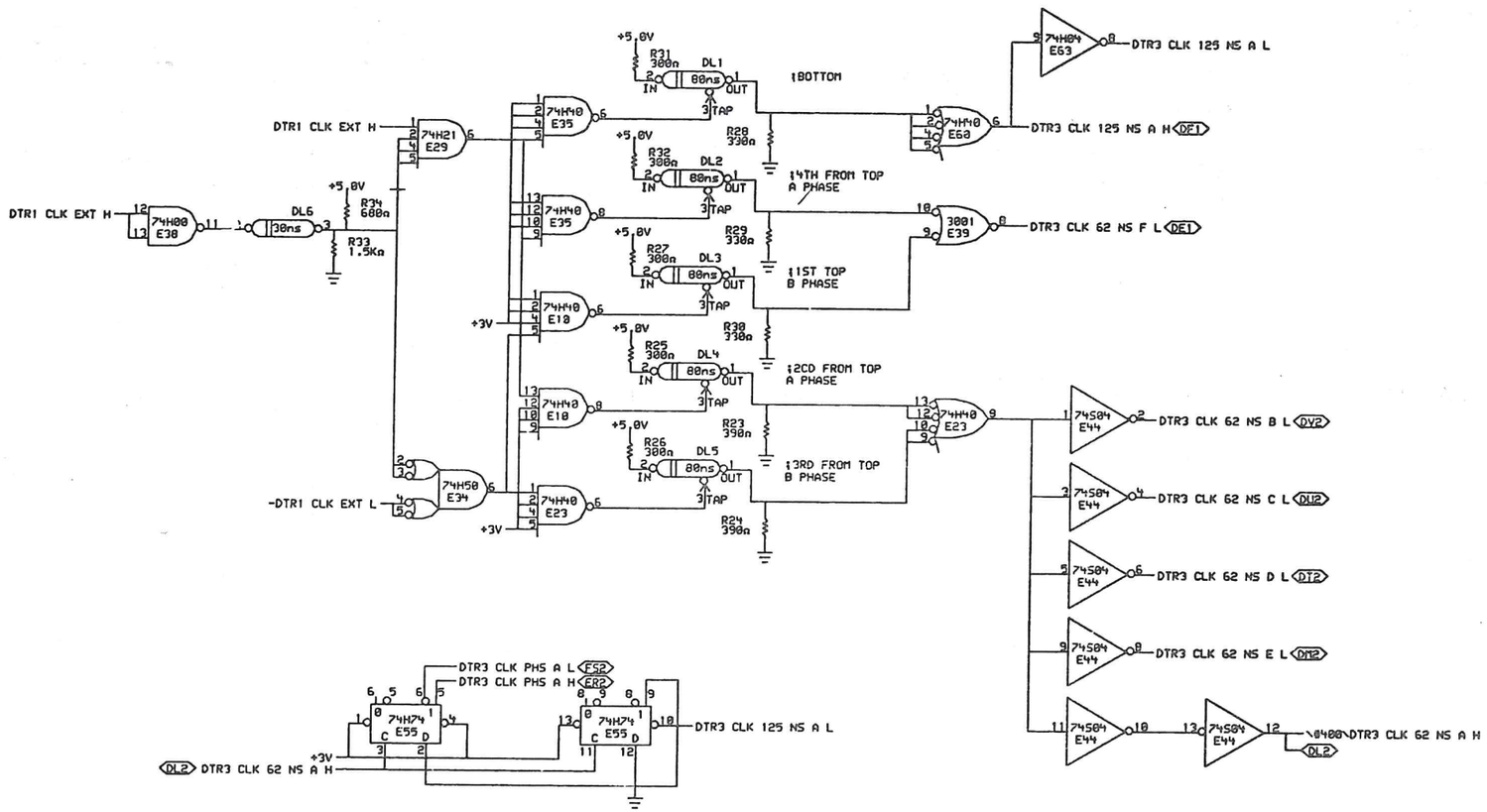

3 OF 5

"THIS DRAWING AND SPECIFICATIONS, HEREIN, ARE THE PROPERTY OF DIGITAL EQUIPMENT CORPORATION AND SHALL NOT BE REPRODUCED OR COPIED OR USED IN WHOLE OR IN PART AS THE BASIS FOR THE MANUFACTURE OR SALE OF ITEMS WITHOUT WRITTEN PERMISSION. COPYRIGHT © 1977, DIGITAL EQUIPMENT CORPORATION"

REVISIONS		
CHK	CHANGE NO.	REV
G7	M8560-C0002	B

DRW. 24-JAN-77 | ENG. | DATE 25JAN77 | TITLE: DMA TIMING AND SBUS TRANCEIVERS

CHK'D | DATE 1/2/77 | BOARD LOCATION: 1 OF 83

DTR3EX.DRW[4,623] 24-JAN-77 18:09 | SHEET 1 OF 1 | NEXT HIGHER ASSEMBLY: B-DD-M8560-0

FIRST USED ON OPTION/MODEL: DMA20

SIZE	CODE	NUMBER	REV.
D	CS	M8560-0-DTR3	B

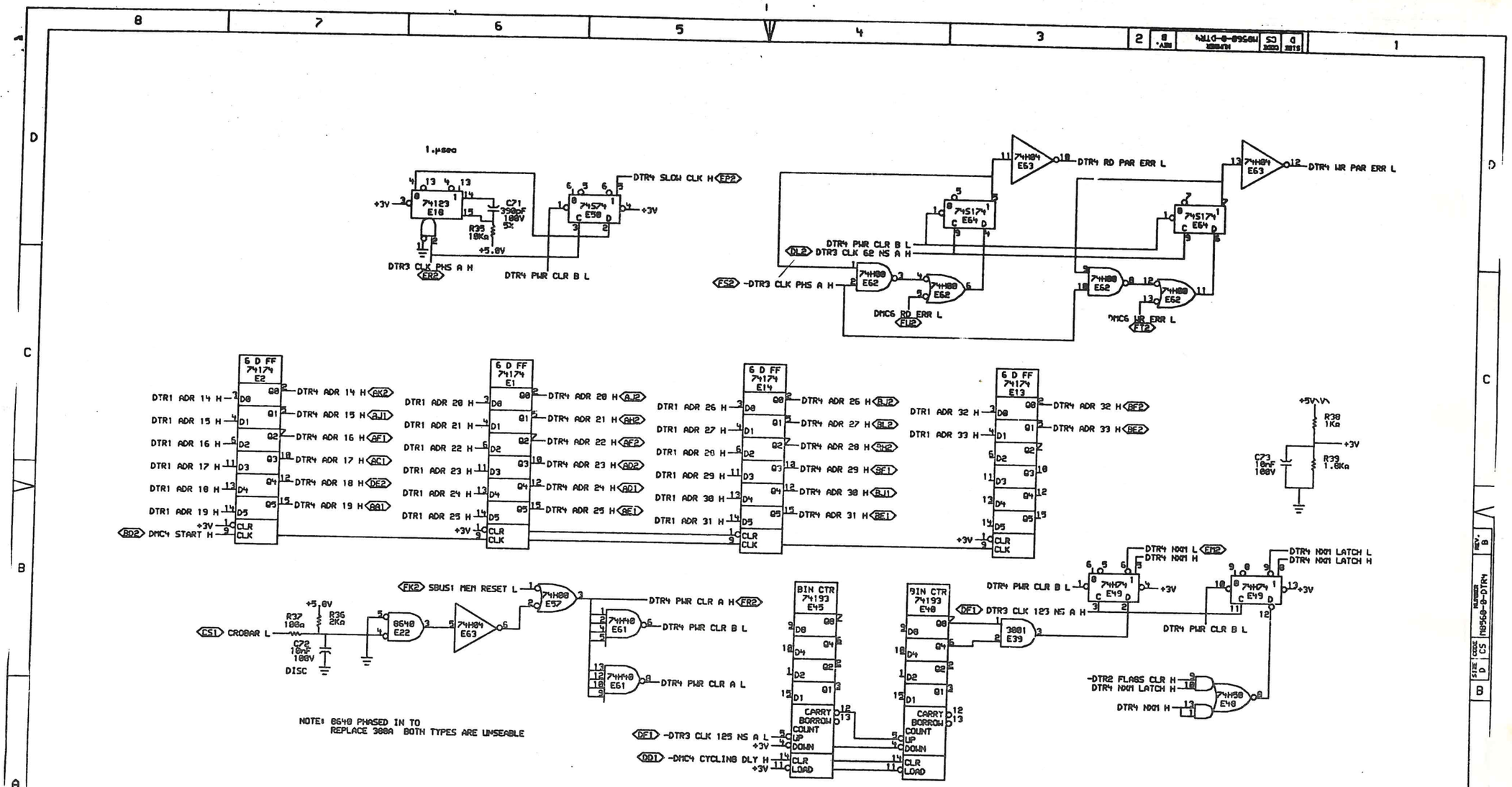

"THIS DRAWING AND SPECIFICATIONS, HEREIN, ARE THE PROPERTY OF DIGITAL EQUIPMENT CORPORATION AND SHALL NOT BE REPRODUCED OR COPIED OR USED IN WHOLE OR IN PART AS THE BASIS FOR THE MANUFACTURE OR SALE OF ITEMS WITHOUT WRITTEN PERMISSION.
COPYRIGHT © 1977, DIGITAL EQUIPMENT CORPORATION"

REVISIONS		
CHK	CHANGE NO.	REV
–	M8560-0000	B

DRAWN: D. Lagosky 10-AUG-77 13:52
DIGMEX.DRW(4.623)
FIRST USED ON OPTION/MODEL: DMA20
ENG: 11 AUG 77
NEXT HIGHER ASSEMBLY: B-DD-M8560-0
BOARD LOCATION: 1 OF 1
SHEET 1 OF 1

TITLE: DMA TIMING AND SBUS TRANCEIVERS

SIZE	CODE	NUMBER	REV.
D	CS	M8560-0-DTR4	B

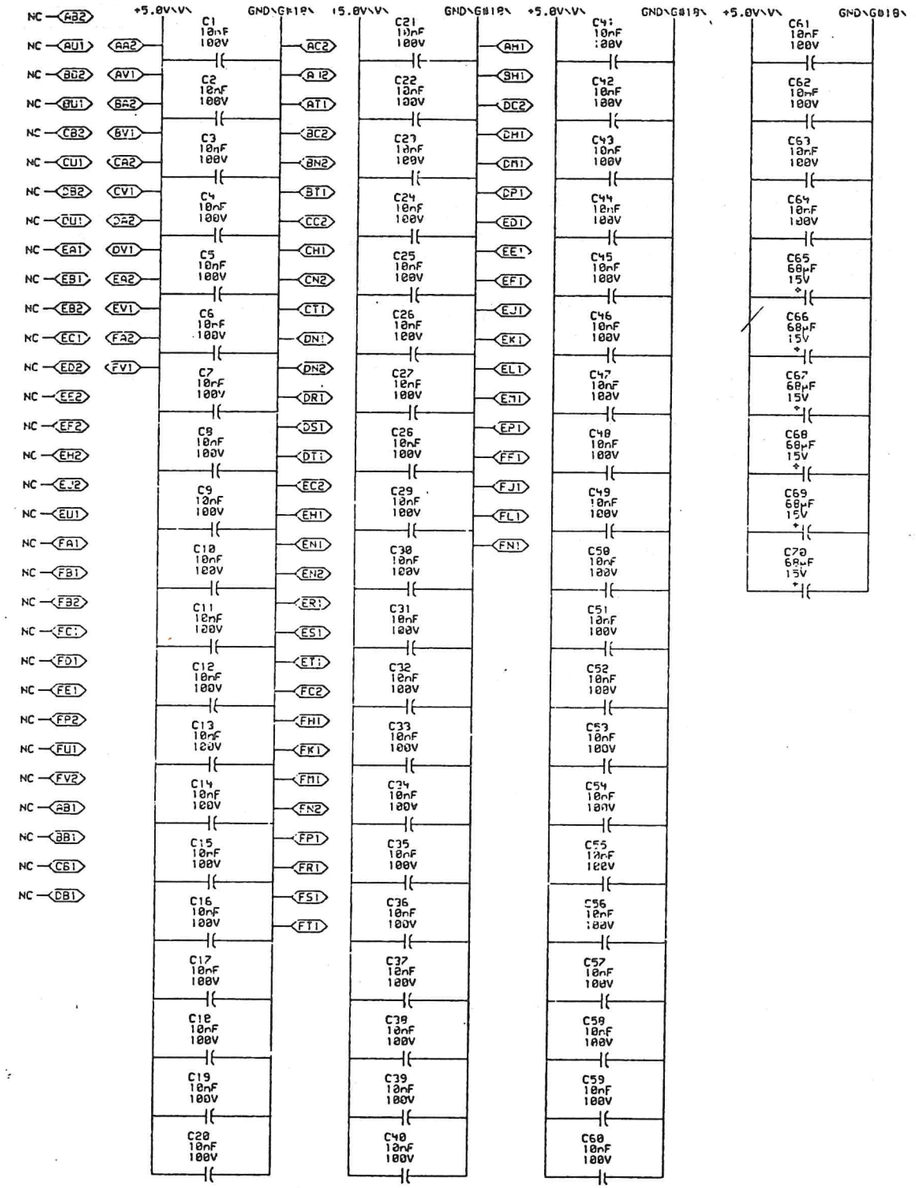

NOTE:

1. ALL 74H SERIES LOGIC IS TO BE 74LS74H SERIES
2. THE FOLLOWING PIN NUMBERS APPLY TO TTL DIP PACKAGES:

GND	+5.0V	PACKAGE TYPE
8	16	16 PIN DIP
7	14	14 PIN DIP
14	8	8 PIN DIP

"THIS DRAWING AND SPECIFICATIONS, HEREIN, ARE THE PROPERTY OF DIGITAL EQUIPMENT CORPORATION AND SHALL NOT BE REPRODUCED OR COPIED OR USED IN WHOLE OR IN PART AS THE BASIS FOR THE MANUFACTURE OR SALE OF ITEMS WITHOUT WRITTEN PERMISSION.
COPYRIGHT © 1975, DIGITAL EQUIPMENT CORPORATION"

REVISIONS		
CHK	CHANGE NO.	REV
[illegible]	[illegible]	A
W. BRUCKERT		

DRAWN BY: B. Toomey DATE 5/23/75
CHECKED BY: W. Hughes DATE 5/23/75
ENG. [illegible] DATE 6/4/75
BOARD LOCATION: 1AF03
SHEET 1 OF 1
DECSYSTEM-10(-20) 12-MAY-75 08:44
NEXT HIGHER ASSEMBLY:
FIRST USED ON OPTION/MODEL: DMA20
B-DD-M8560-0

TITLE: DMA TIMING POWER AND GROUND

SIZE	CODE	NUMBER	REV.
D	CS	M8560-0-DTR5	A

REVISION CONTROL SHEET

CUSTOMER PRINT SET | MFG SET

DRAWING NO	NO OF SHT	DESCRIPTION	OPTION NO/FILE DATE	REVISIONS						
	-	MODULE REVISION		A	B	B	C	D	D	DI
D-UA-M8563-Ø-Ø	8	DMA2Ø BOARD #2		-	A	A	B	C	CI	C2
D-CS-M8563-Ø-DMC1	1	ADAPTER INTERFACE DMA2Ø BOARD 2		-	A	A	A	A	AI	AI
D-CS-M8563-Ø-DMC2	1	BUS SELECTION DMA2Ø		-	A	A	A	B	BI	B2
D-CS-M8563-Ø-DMC3	1	ADAPTER INTERFACE DMA2Ø BOARD 2		-	A	A	A	A	AI	AI
D-CS-M8563-Ø-DMC4	1	ADAPTER INTERFACE DMA2Ø BOARD 2		-	A	A	A	B	BI	BI
D-CS-M8563-Ø-DMC5	1	ADAPTER INTERFACE DMA2Ø BOARD 2		-	A	A	A	B	BI	BI
D-CS-M8563-Ø-DMC6	1	ADAPTER INTERFACE DMA2Ø BOARD 2		-	A	A	A	A	AI	AI
D-CS-M8563-Ø-DMC7	1	ADAPTER INTERFACE POWER AND GROUND		-	A	A	A	A	AI	AI
K-CO-M8563-Ø-4	1	DMA2Ø BOARD #2 (CALDEC DATA BASE)		B	B	B	B	B	B	B
D-AH-M8563-Ø-5	4	DMA2Ø BOARD #2		A	A	A	A	A	A	A
B-MH-M8563-Ø-6	1	MODULE ECO HISTORY		-	A	B	C	D	E	F
5010695	-	ETCH CIRCUIT BOARD		B	B	B	B	B	B	B
P00-M8563-ØØ		PROCESS SHEET (REF ONLY)		-	-	-	-	-	-	-
			ECO NO	ORIG	00001	00001A	00002	00003	00004 REWORK VERSION	00005 REWORK VERSION

CUSTOMER PRINT SET CODES
X = PRINT OF DOCUMENT INCLUDED IN PRINT SET
C = INCLUDES ALL PRINTS INDICATED ON DOCUMENT
S = CONFIDENTIAL AUTHORIZED SIGNATURE REQUIRED

TITLE	SHEET	SIZE	CODE	NUMBER	REV
DMA2Ø BOARD #2	SHEET 2 OF 3	B	DD	M8563-Ø	E

THIS DRAWING AND SPECIFICATIONS HEREIN, ARE THE PROPERTY OF DIGITAL EQUIPMENT CORPORATION AND SHALL NOT BE REPRODUCED OR COPIED OR USED IN WHOLE OR IN PART AS THE BASIS FOR THE MANUFACTURE OR SALE OF ITEMS WITHOUT WRITTEN PERMISSION.
COPYRIGHT © 1975 DIGITAL EQUIPMENT CORPORATION

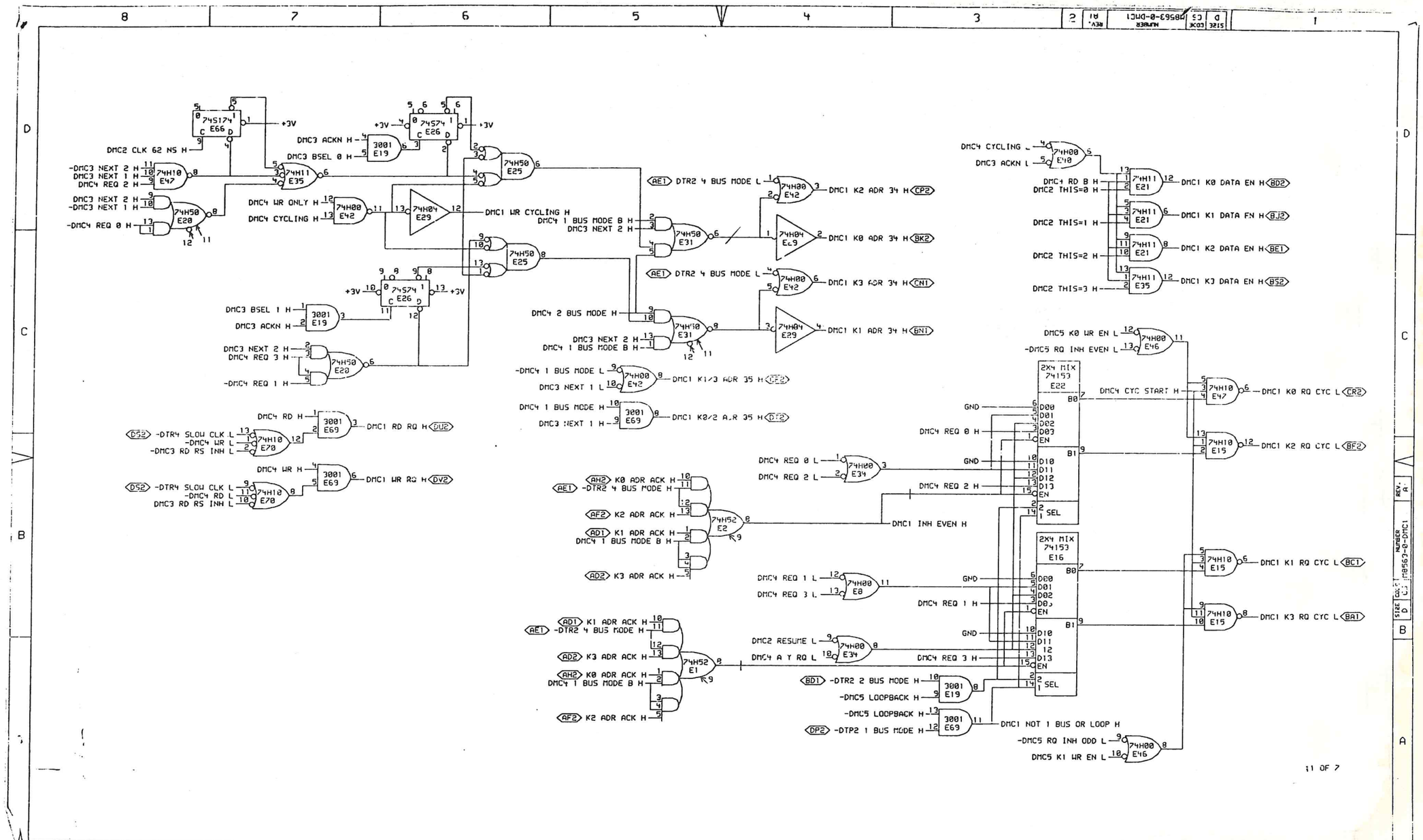

"THIS DRAWING AND SPECIFICATIONS, HEREIN, ARE THE PROPERTY OF DIGITAL EQUIPMENT CORPORATION AND SHALL NOT BE REPRODUCED OR COPIED OR USED IN WHOLE OR IN PART AS THE BASIS FOR THE MANUFACTURE OR SALE OF ITEMS WITHOUT WRITTEN PERMISSION. COPYRIGHT © 1975, DIGITAL EQUIPMENT CORPORATION"

REVISIONS			
CHK	CHANGE NO.	REV	M8563-00004 A1
	M8563-00004	A	W BRUCKERT
	W BRUCKERT		

digital

DRN R Toomey DATE 5/6/75 ENG. W Bruckert DATE 6/9/75
CHK DATE BOARD LOCATION: 1AF02
SHEET 1 OF 1
DMC1EXC(4,426) 06-JUN-75 07:39 NEXT HIGHER ASSEMBLY: B-DD-M8563-0
FIRST USED ON OPTION/MODEL: DMA20

TITLE: ADAPTER INTERFACE DMA20 BOARD 2

SIZE	CODE	NUMBER	REV.
D	CS	M8563-0-DMC1	A1

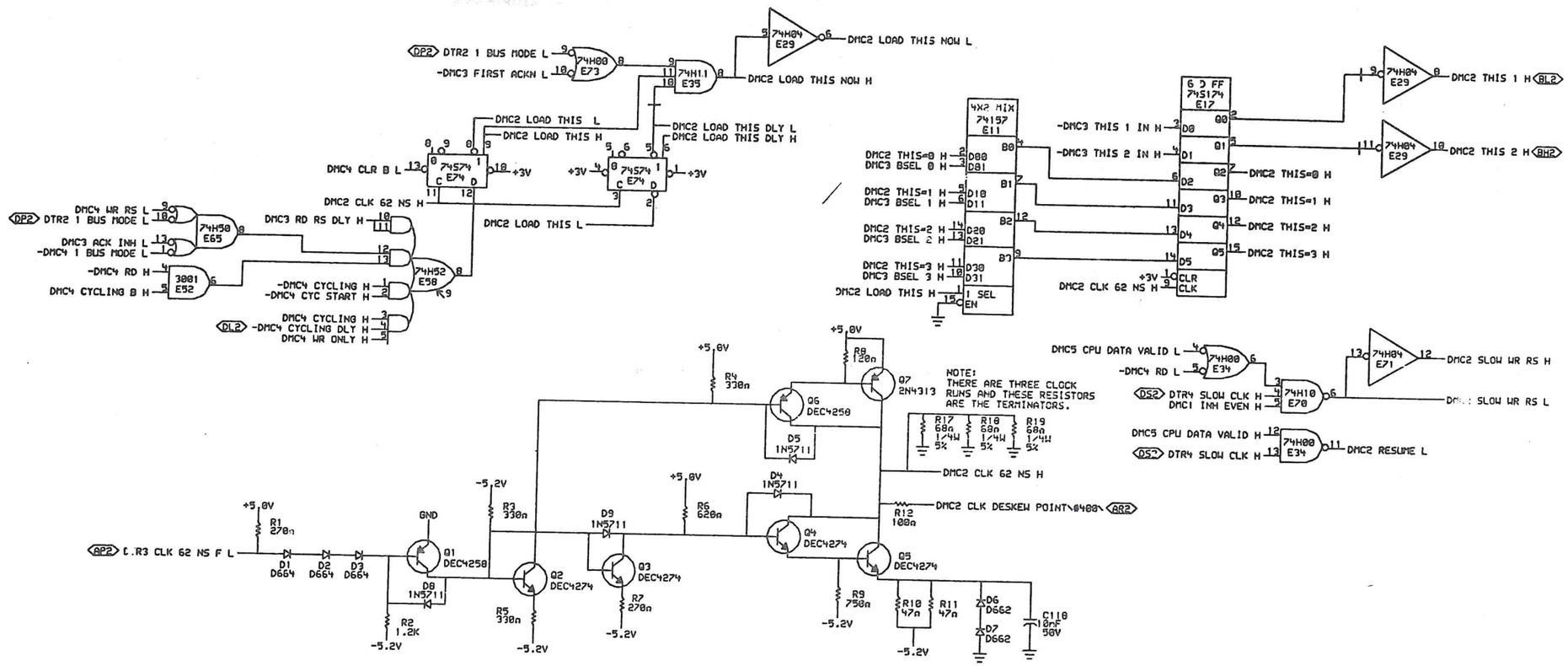

12 OF 7

"THIS DRAWING AND SPECIFICATIONS, HEREIN, ARE THE PROPERTY OF DIGITAL EQUIPMENT CORPORATION AND SHALL NOT BE REPRODUCED OR COPIED OR USED IN WHOLE OR IN PART AS THE BASIS FOR THE MANUFACTURE OR SALE OF ITEMS WITHOUT WRITTEN PERMISSION. COPYRIGHT © 1977, DIGITAL EQUIPMENT CORPORATION"

REVISIONS		
CHK	CHANGE NO.	REV
-	M8563-0000-5	B2
	W. BRUCKERT	

digital

DRW. N. Loonley DATE 15-APR-77 ENG. W. Bruckert DATE 20MAY77
CHKD [illegible] DATE 4/8/79 BOARD LOCATION: 1AF82
DMC2EX.DRWK4.626 15-APR-77 10:15 SHEET 1 OF
FIRST USED ON OPTION/MODEL: DMA20 NEXT HIGHER ASSEMBLY: B-DD-M8563-0

TITLE: BUS SELECTION DMA20

SIZE	CODE	NUMBER	REV.
D	CS	M8563-0-DMC2	B2

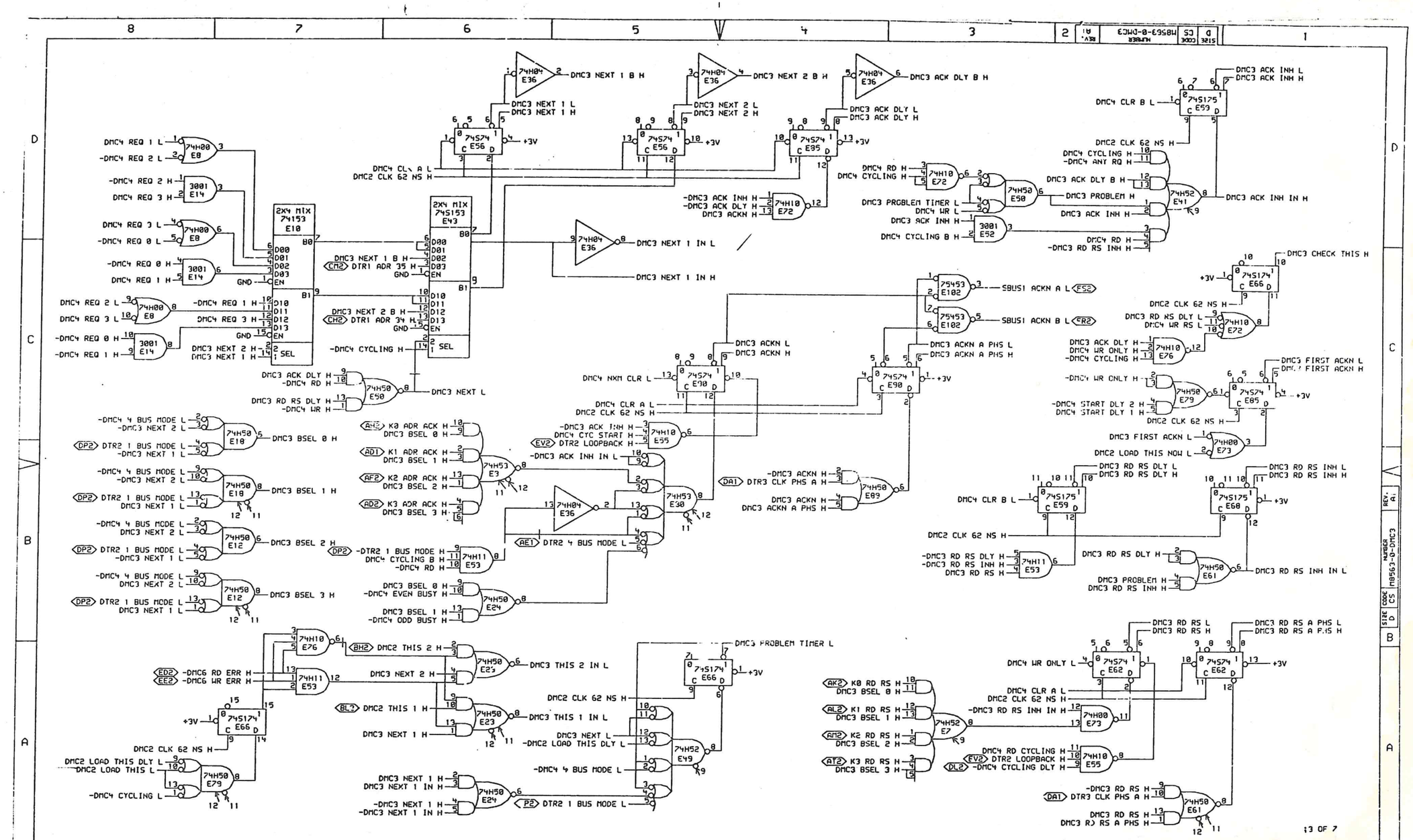

"THIS DRAWING AND SPECIFICATIONS, HEREIN, ARE THE PROPERTY OF DIGITAL EQUIPMENT CORPORATION AND SHALL NOT BE REPRODUCED OR COPIED OR USED IN WHOLE OR IN PART AS THE BASIS FOR THE MANUFACTURE OR SALE OF ITEMS WITHOUT WRITTEN PERMISSION. COPYRIGHT © 1979, DIGITAL EQUIPMENT CORPORATION"

REVISIONS		
CHK	CHANGE NO.	REV
	M3563-00004	A1
	M3563-00001	A
W BRUCKERT		

M3563-00004 A1
W.BRUCKERT

DRW: J. Stanley DATE 5/6/75
ENG: W. Bruckert DATE 6/9/75
CHK: D. Stephenson DATE 5/6/75
BOARD LOCATION: 1AF02
SHEET 1 OF 1
DMC3EX(4,426) 06-JUN-79 07:42
NEXT HIGHER ASSEMBLY: B-DD-M8563-0
FIRST USED ON OPTION/MODEL: DMA20

TITLE: ADAPTER INTERFACE DMA20 BOARD 2

SIZE	CODE	NUMBER	REV.
D	CS	M8563-0-DMC3	A1

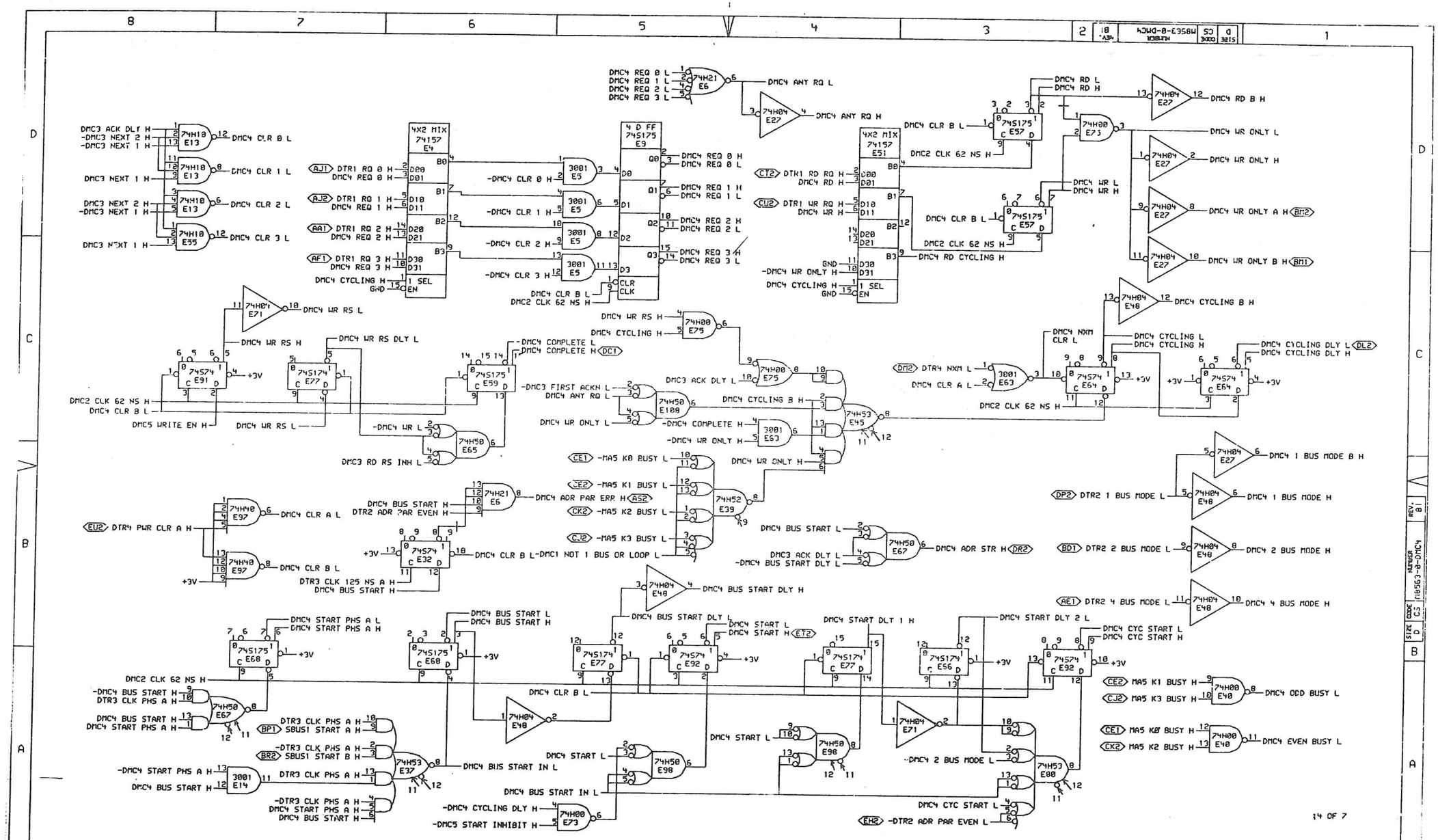

"THIS DRAWING AND SPECIFICATIONS, HEREIN, ARE THE PROPERTY OF DIGITAL EQUIPMENT CORPORATION AND SHALL NOT BE REPRODUCED OR COPIED OR USED IN WHOLE OR IN PART AS THE BASIS FOR THE MANUFACTURE OR SALE OF ITEMS WITHOUT WRITTEN PERMISSION.
COPYRIGHT © 1976, DIGITAL EQUIPMENT CORPORATION"

REVISIONS		
CHK	CHANGE NO.	REV
-	M2563-00004	B1
	W. BRUCKERT	

M8563-00004 B1
W. BRUCKERT

digital

DRW. D. Loomis 25-MAY-76
CHK W. Stephens
DATE
ENG. W. Bruckert 25-MAY-76
DATE 6/21/76
BOARD LOCATION: 1AF22
SHEET 1 OF 1
DMC4EX.CRU(4,425) 25-MAY-76 09:25
NEXT HIGHER ASSEMBLY: B-DD-M8563-0
FIRST USED ON OPTION/MODEL: DMA20

TITLE: ADAPTER INTERFACE DMA20 BOARD 2

SIZE	CODE	NUMBER	REV.
D	C5	M8563-0-DMC4	B1

"THIS DRAWING AND SPECIFICATIONS, HEREIN, ARE THE PROPERTY OF DIGITAL EQUIPMENT CORPORATION AND SHALL NOT BE REPRODUCED OR COPIED OR USED IN WHOLE OR IN PART AS THE BASIS FOR THE MANUFACTURE OR SALE OF ITEMS WITHOUT WRITTEN PERMISSION. COPYRIGHT © 1976, DIGITAL EQUIPMENT CORPORATION"

REVISIONS			M8563-00004	B1
CHK	CHANGE NO.	REV	W. BRUCKERT	
–	M8563-00003	B		

digital

DRN: | DATE 23-MAY-76 | ENG. | DATE 6/21/76
CHK: | DATE 5/24/76 | BOARD LOCATION: AF02
DMCSEX.DRL(4,425) 23-MAY-76 09:12 | SHEET 1 OF 1 | NEXT HIGHER ASSEMBLY: B-DD-M8563-0
FIRST USED ON OPTION/MODEL: DMA20

TITLE: ADAPTER INTERFACE DMA20 BOARD 2

SIZE	CODE	NUMBER	REV.
D	CS	M8563-0-DMC5	B1

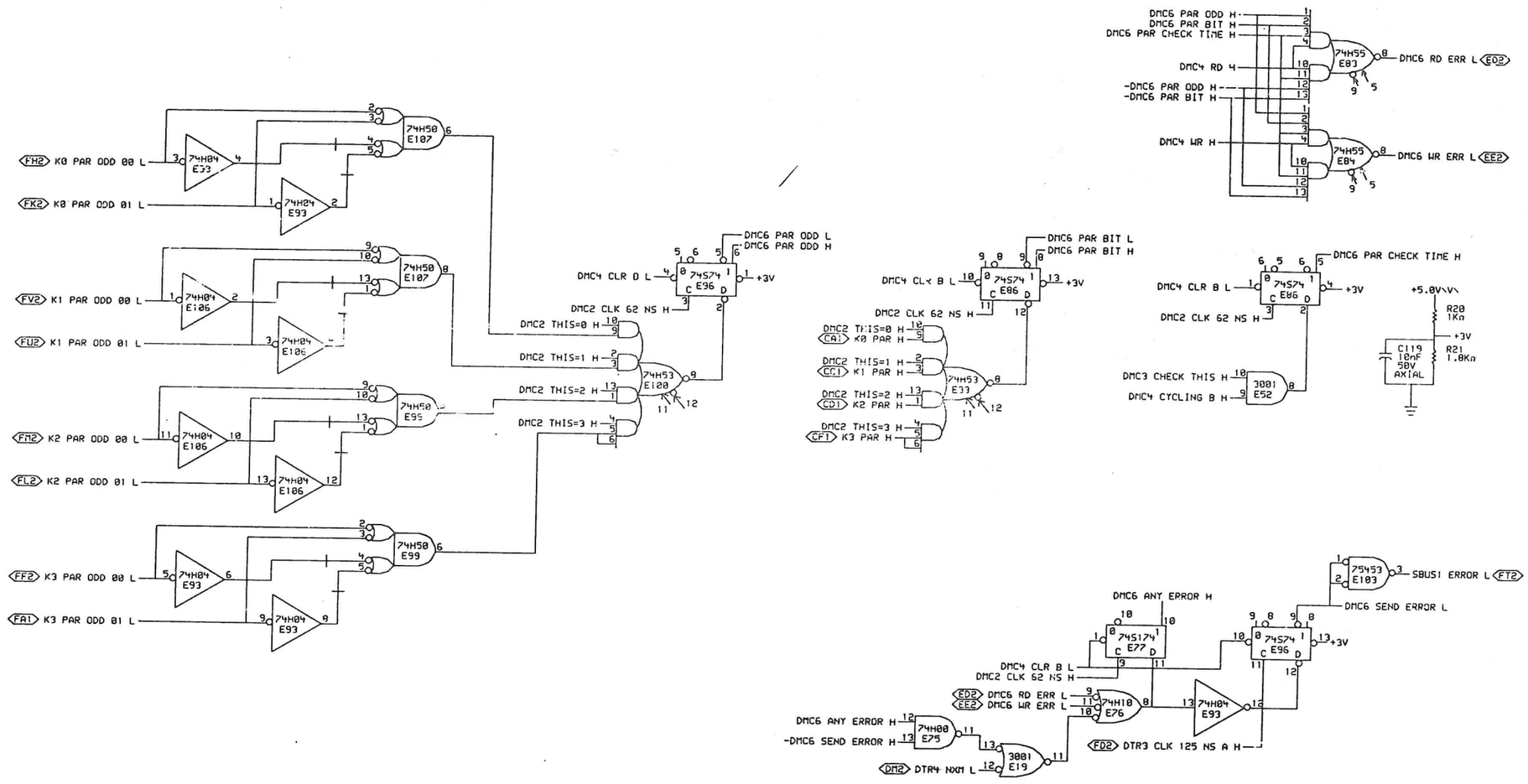

"THIS DRAWING AND SPECIFICATIONS, HEREIN, ARE THE PROPERTY OF DIGITAL EQUIPMENT CORPORATION AND SHALL NOT BE REPRODUCED OR COPIED OR USED IN WHOLE OR IN PART AS THE BASIS FOR THE MANUFACTURE OR SALE OF ITEMS WITHOUT WRITTEN PERMISSION. COPYRIGHT © 1975, DIGITAL EQUIPMENT CORPORATION"

REVISIONS		
CHK	CHANGE NO.	REV
	M8563-00001	A
	W.BRUCKERT	

M8563-00004
W. BRUCKURT

digital

DRN A. Foody DATE 6/6/75 ENG. W. Bruckert DATE 6/9/75
CHK'D W. Stephenson DATE 6/6/75 BOARD LOCATION: 1AF02
SHEET 1 OF 1
DMC6EX(4,426) 06-JUN-75 09:08 NEXT HIGHER ASSEMBLY: B-DD-M8563-0
FIRST USED ON OPTION/MODEL: DMA20

TITLE: ADAPTER INTERFACE DMA20 BOARD 2

SIZE	CODE	NUMBER	REV.
D	CS	M8563-0-DMC6	A

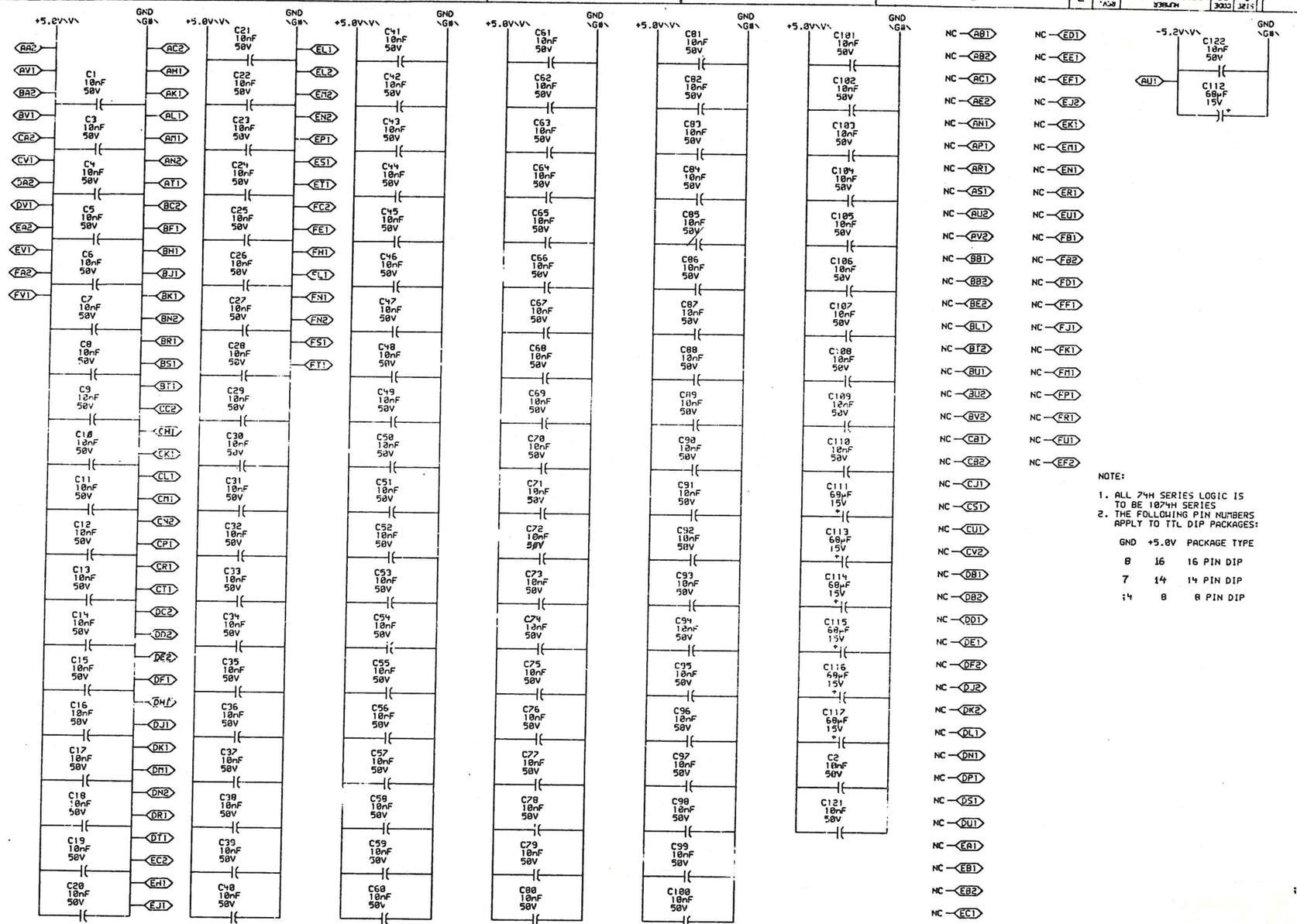

NOTE:

1. ALL 74H SERIES LOGIC IS TO BE 1074H SERIES
2. THE FOLLOWING PIN NUMBERS APPLY TO TTL DIP PACKAGES:

GND	+5.0V	PACKAGE TYPE
8	16	16 PIN DIP
7	14	14 PIN DIP
14	8	8 PIN DIP

17 OF 7

"THIS DRAWING AND SPECIFICATIONS, HEREIN, ARE THE PROPERTY OF DIGITAL EQUIPMENT CORPORATION AND SHALL NOT BE REPRODUCED OR COPIED OR USED IN WHOLE OR IN PART AS THE BASIS FOR THE MANUFACTURE OR SALE OF ITEMS WITHOUT WRITTEN PERMISSION.
COPYRIGHT © 1975, DIGITAL EQUIPMENT CORPORATION"

REVISIONS		
CHK	CHANGE NO.	REV
	M8563-00001	A
W.BRUCKERT		

M8563-00004 A1
W.BRUCKERT

DRN D. Goodey DATE 5/6/75 ENG. W. Bruckert DATE 6/11/75
CHK D. W. Stephenson DATE 6/26/75 BOARD LOCATION: 1AF02
SHEET 1 OF 1
DMC7EX(4,426) 06-JUN-75 09:09 NEXT HIGHER ASSEMBLY:
FIRST USED ON OPTION/MODEL: DMA20 B-DD-M8563-0

TITLE: ADAPTER INTERFACE POWER AND GROUND

SIZE	CODE	NUMBER	REV.
D	CS	M8563-0-DMC7	A1

REVISION CONTROL SHEET

CUSTOMER PRINT SET	MFG SET	DRAWING NO	NO OF SHT	DESCRIPTION	OPTION NO/FILE DATE	REVISIONS						
			-	MODULE REVISION		A	B	B	C	D	E	F
		D-UA-M8563-Ø-Ø	8	DMAØ2 BOARD #2		-	A	A	B	C	D	E
		D-CS-M8563-Ø-DMC1	1	ADAPTER INTERFACE DMAØ2 BOARD 2		-	A	A	A	A	B	B
		D-CS-M8563-Ø-DMC2	1	BUS SELECTION DMAØ2		-	A	A	A	B	C	D
		D-CS-M8563-Ø-DMC3	1	ADAPTER INTERFACE DMAØ2 BOARD 2		-	A	A	A	A	B	B
		D-CS-M8563-Ø-DMC4	1	ADAPTER INTERFACE DMAØ2 BOARD 2		-	A	A	A	B	C	C
		D-CS-M8563-Ø-DMC5	1	ADAPTER INTERFACE DMAØ2 BOARD 2		-	A	A	A	B	C	C
		D-CS-M8563-Ø-DMC6	1	ADAPTER INTERFACE DMAØ2 BOARD 2		-	A	A	A	A	B	B
		D-CS-M8563-Ø-DMC7	1	ADAPTER INTERFACE POWER AND GROUND		-	A	A	A	A	B	C
		K-CO-M8563-Ø-4	1	DMAØ2 BOARD #2 (CALDEC DATA BASE)		B	B	B	B	B	C	C
		D-AH-M8563-Ø-5	4	DMAØ2 BOARD #2		A	A	A	A	A	B	B
		B-MH-M8563-Ø-6	1	MODULE ECO HISTORY		-	A	B	C	D	E	F
		5010695	-	ETCH CIRCUIT BOARD		B	B	B	B	B	C	C
		POO-M8563-ØØ	-	PROCESS SHEET (REF ONLY)		-	-	-	-	-	-	-
					ECO NO	ORIG	00001	00001A	00002	00003	00004 NEW RELAYOUT VERSION	00005

CUSTOMER PRINT SET CODES

X = PRINT OF DOCUMENT INCLUDED IN PRINT SET
C = INCLUDES ALL PRINTS INDICATED ON DOCUMENT
S = CONFIDENTIAL AUTHORIZED SIGNATURE REQUIRED

TITLE		SIZE	CODE	NUMBER	REV
DMAØ2 BOARD #2	SHEET 3 OF 3	B	DD	M8563-Ø	E

THESE DRAWING AND SPECIFICATIONS, HEREIN, ARE THE PROPERTY OF DIGITAL EQUIPMENT CORPORATION AND SHALL NOT BE REPRODUCED OR COPIED OR USED IN WHOLE OR IN PART AS THE BASIS FOR THE MANUFACTURE OR SALE OF ITEMS WITHOUT WRITTEN PERMISSION.
COPYRIGHT © 1976 DIGITAL EQUIPMENT CORPORATION

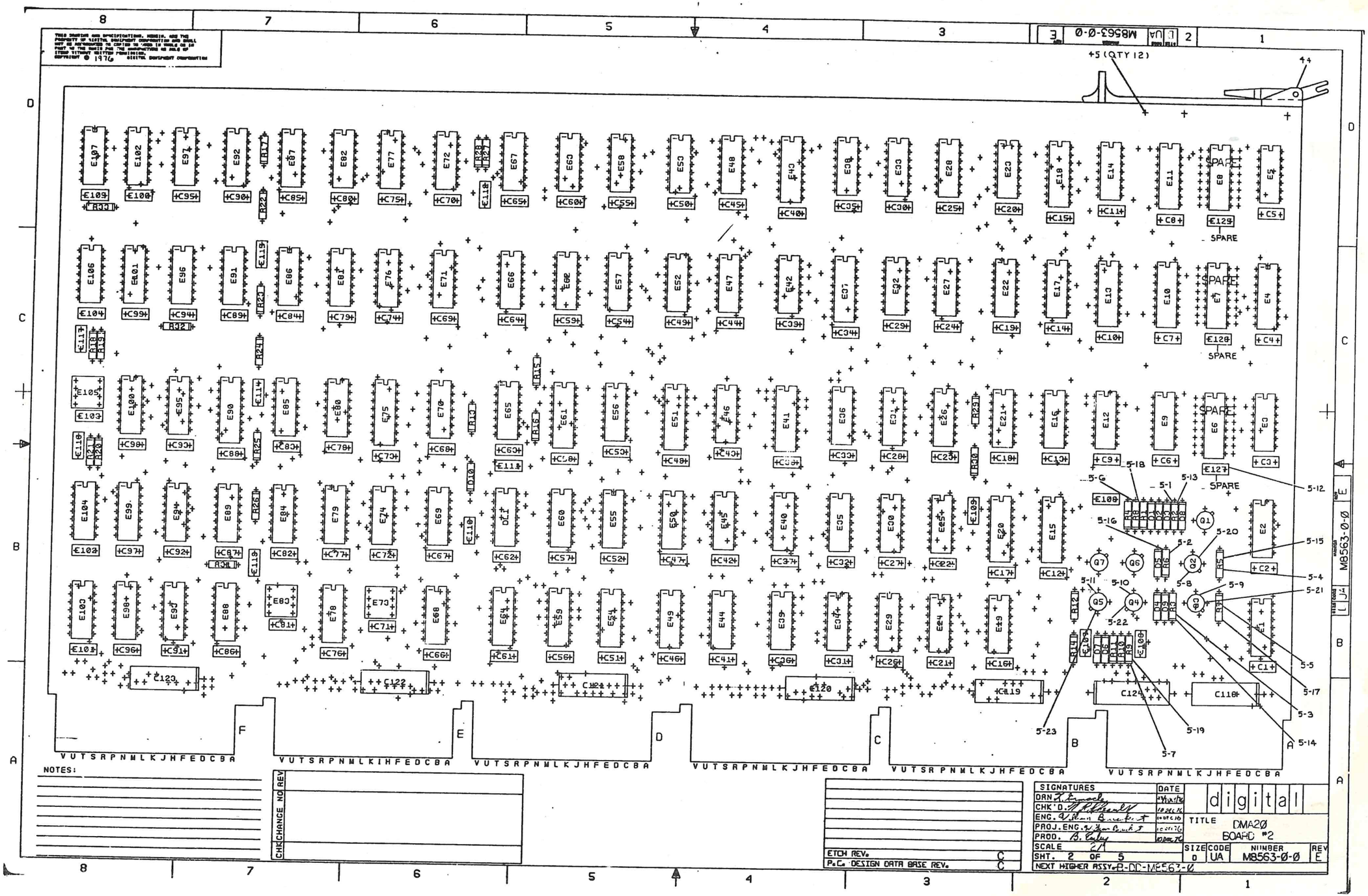

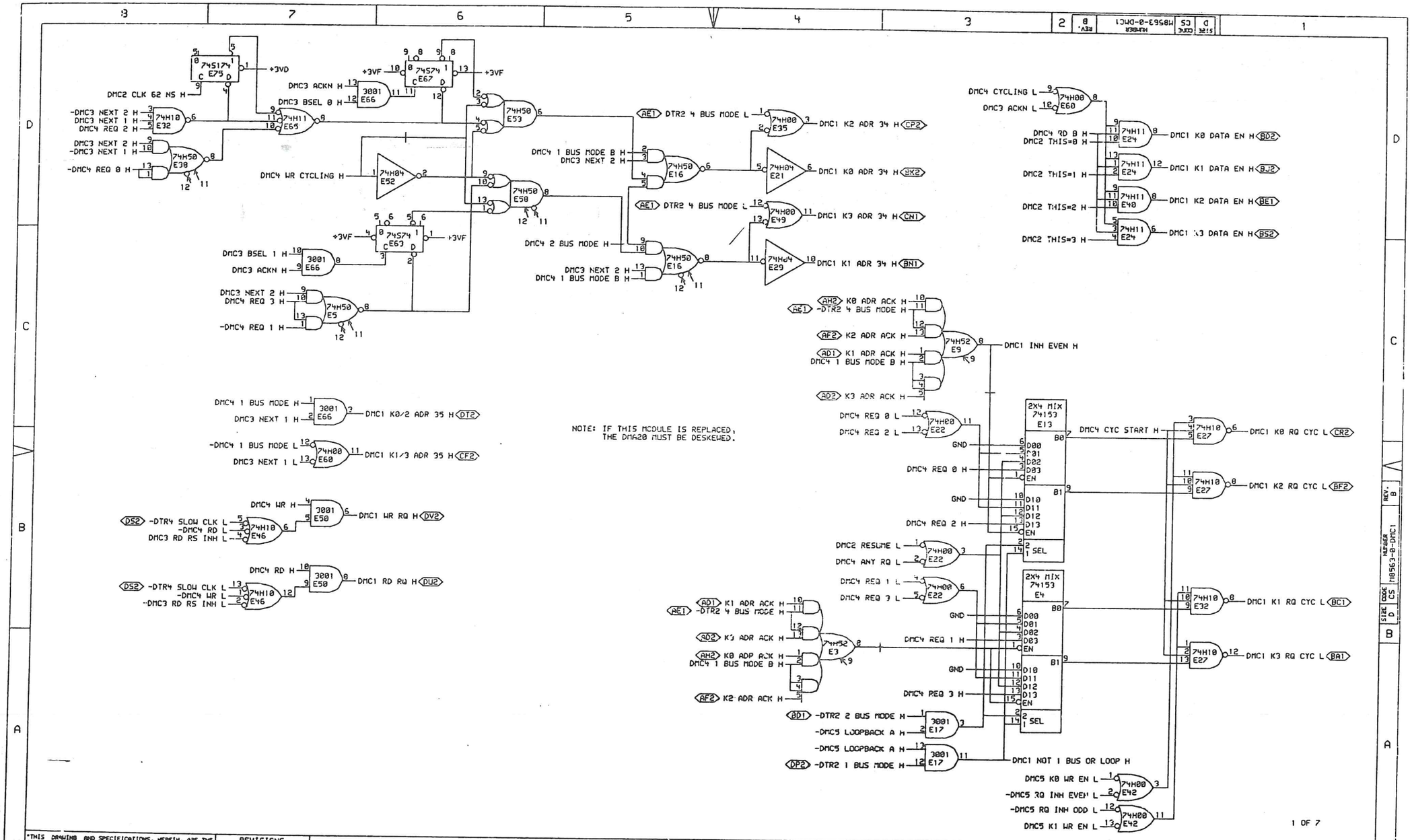

"THIS DRAWING AND SPECIFICATIONS, HEREIN, ARE THE PROPERTY OF DIGITAL EQUIPMENT CORPORATION AND SHALL NOT BE REPRODUCED OR COPIED OR USED IN WHOLE OR IN PART AS THE BASIS FOR THE MANUFACTURE OR SALE OF ITEMS WITHOUT WRITTEN PERMISSION.
COPYRIGHT © 1976, DIGITAL EQUIPMENT CORPORATION"

REVISIONS		
CHK	CHANGE NO.	REV

DIGITAL

DRN. L. Loosley DATE 18-NOV-76
CHK. D. Stephenson DATE 11/11/76
ENG. W. Brockert DATE 19 NOV 76
BOARD LOCATION: 1AF02
SHEET 1 OF 1
DMCIER.DRW<4,56> 03-NOV-76 11:01
NEXT HIGHER ASSEMBLY: B-DD-M8563-0
FIRST USED ON OPTION/MODEL: DMA20

TITLE: ADAPTER INTERFACE DMA20 BOARD 2

SIZE	CODE	NUMBER	REV.
D	CS	M8563-0-DMC1	B

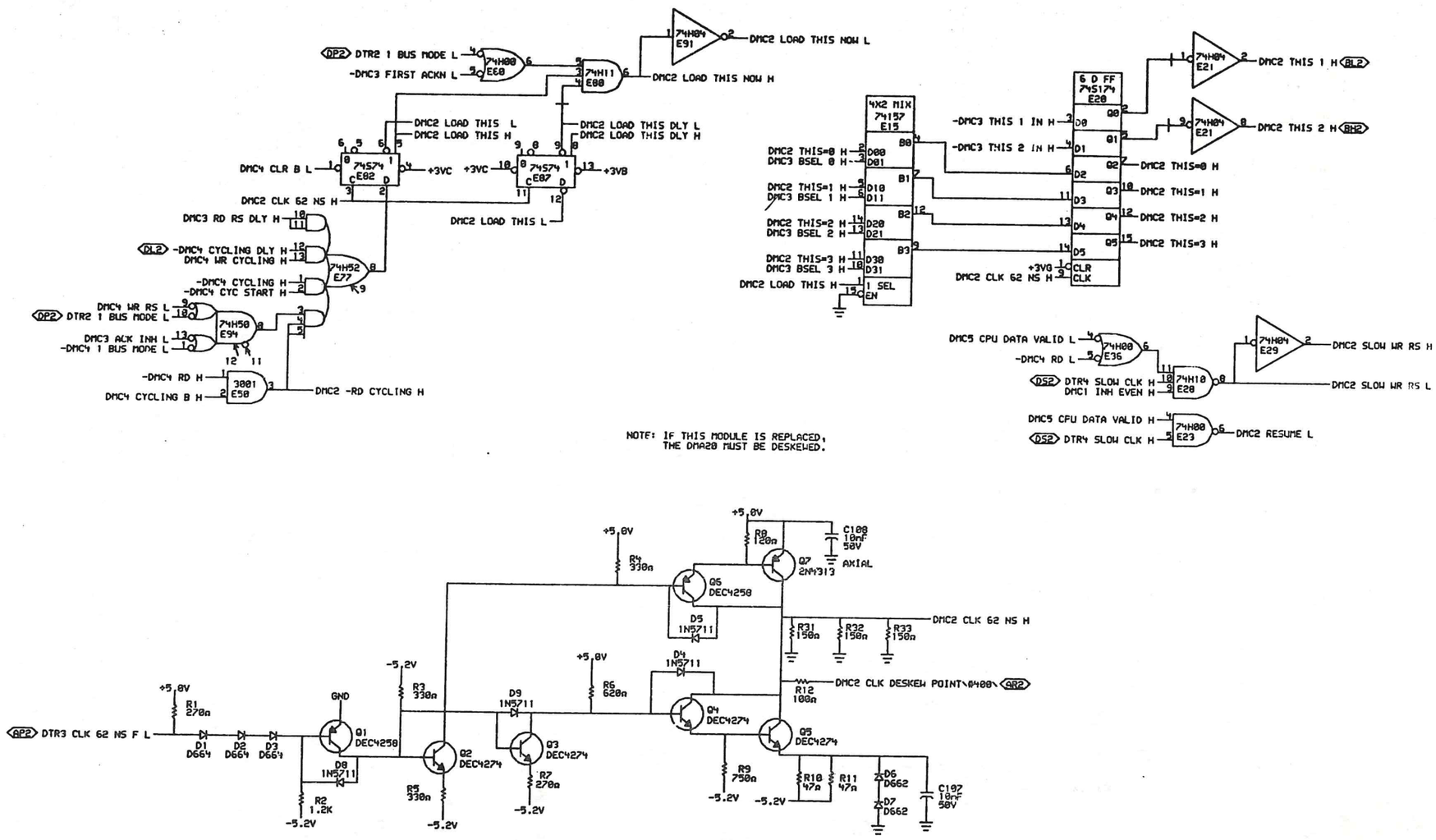

2 OF 7

"THIS DRAWING AND SPECIFICATIONS, HEREIN, ARE THE PROPERTY OF DIGITAL EQUIPMENT CORPORATION AND SHALL NOT BE REPRODUCED OR COPIED OR USED IN WHOLE OR IN PART AS THE BASIS FOR THE MANUFACTURE OR SALE OF ITEMS WITHOUT WRITTEN PERMISSION.
COPYRIGHT © 1977, DIGITAL EQUIPMENT CORPORATION"

REVISIONS		
CHK	CHANGE NO.	REV
-	M8563-XXXX	-

digital

DRW. 28-APR-77 | DATE | ENG. | DATE 21APR77
CHK | DATE 4/21/77 | BOARD LOCATION: 1AF02 | SHEET 1 OF 1
DMC2ER.DRW[4,626] 28-APR-77 15:06 | NEXT HIGHER ASSEMBLY: B-DD-M8563-0
FIRST USED ON OPTION/MODEL: DMA20

TITLE: BUS SELECTION DMA20

SIZE	CODE	NUMBER	REV.
D	CS	M8563-0-DMC2	D

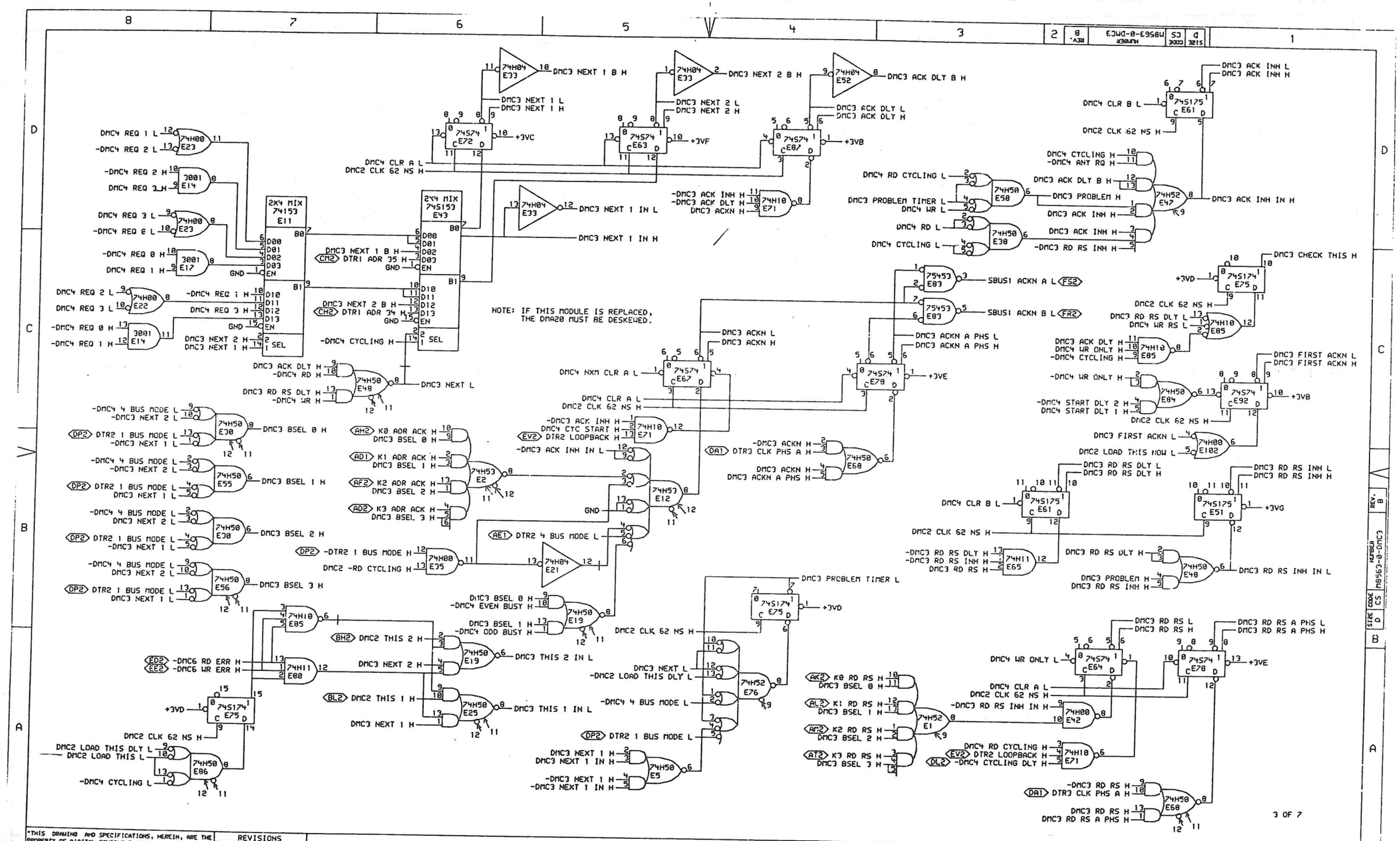

"THIS DRAWING AND SPECIFICATIONS, HEREIN, ARE THE PROPERTY OF DIGITAL EQUIPMENT CORPORATION AND SHALL NOT BE REPRODUCED OR COPIED OR USED IN WHOLE OR IN PART AS THE BASIS FOR THE MANUFACTURE OR SALE OF ITEMS WITHOUT WRITTEN PERMISSION. COPYRIGHT © 1976, DIGITAL EQUIPMENT CORPORATION"

REVISIONS		
CHK	CHANGE NO.	REV

digital

DRW. L. Loosley — DATE 11-NOV-76 — ENG. M. Gaudet — DATE 16 NOV 76
CHK'D W. Hutchinson — DATE 11/12/76 — BOARD LOCATION: 1AF02 — SHEET 1 OF 1
DMC3ER.CRU(4,56) 18-NOV-76 11:04 — NEXT HIGHER ASSEMBLY: B-DD-M8563-0
FIRST USED ON OPTION/MODEL: DMA20

TITLE: ADAPTER INTERFACE DMA20 BOARD 2

SIZE	CODE	NUMBER	REV.
D	CS	M8563-0-DMC3	B

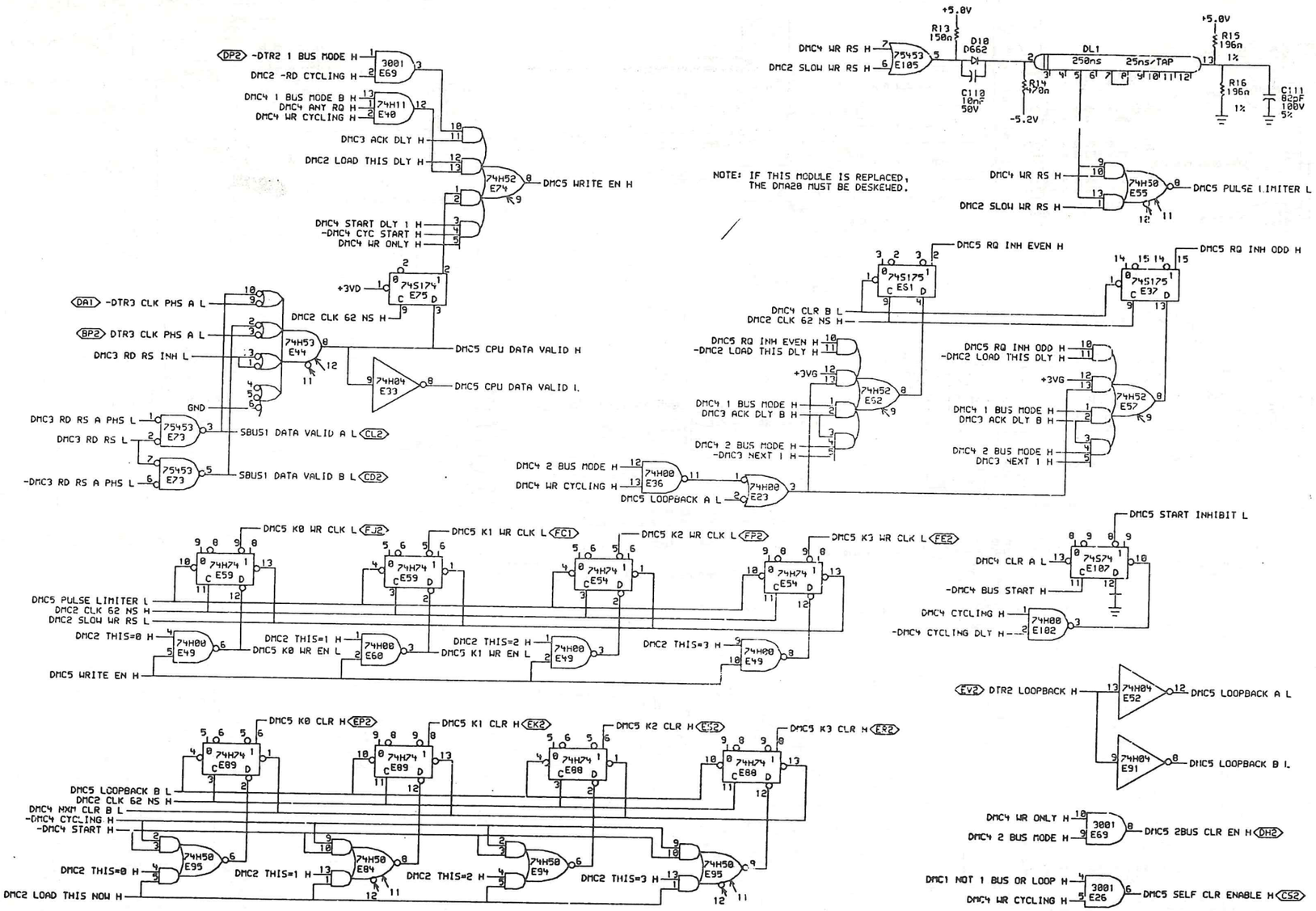

5 OF 7

"THIS DRAWING AND SPECIFICATIONS, HEREIN, ARE THE PROPERTY OF DIGITAL EQUIPMENT CORPORATION AND SHALL NOT BE REPRODUCED OR COPIED OR USED IN WHOLE OR IN PART AS THE BASIS FOR THE MANUFACTURE OR SALE OF ITEMS WITHOUT WRITTEN PERMISSION. COPYRIGHT © 1976, DIGITAL EQUIPMENT CORPORATION"

REVISIONS		
CHK	CHANGE NO.	REV

DRW.	DATE 10-NOV-76	ENG.	DATE 16 NOV 76
CHK	DATE	BOARD LOCATIONS: 1 AF02 SHEET 1 OF 1	
DMCSCR.DRW[4,56] 09-NOV-76 11:07		NEXT HIGHER ASSEMBLY: B-DD-M8563-0	
FIRST USED ON OPTION/MODEL: DMA20			

TITLE: ADAPTER INTERFACE DMA20 BOARD 2

SIZE	CODE	NUMBER	REV.
D	CS	M8563-0-DMC5	C

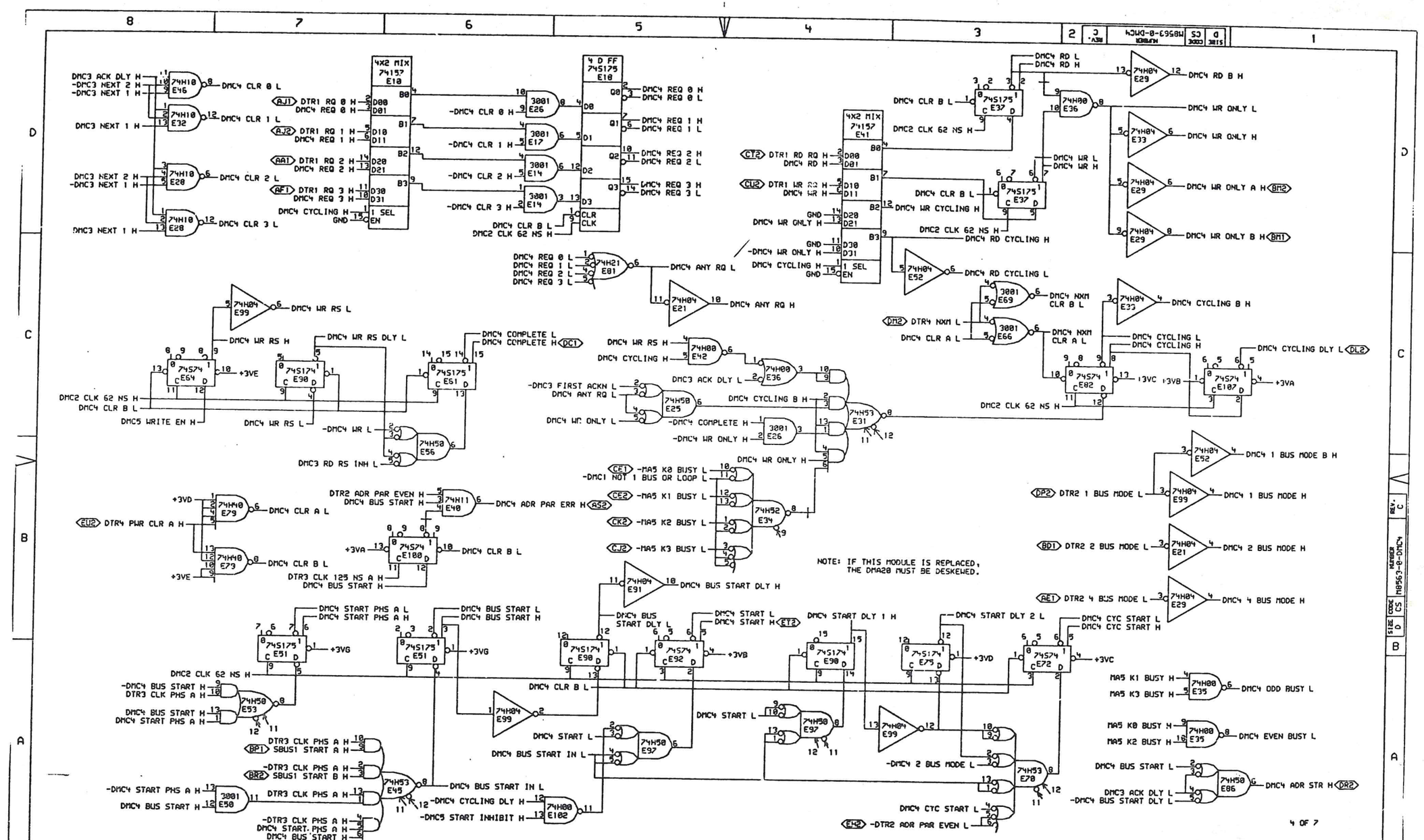

"THIS DRAWING AND SPECIFICATIONS, HEREIN, ARE THE PROPERTY OF DIGITAL EQUIPMENT CORPORATION AND SHALL NOT BE REPRODUCED OR COPIED OR USED IN WHOLE OR IN PART AS THE BASIS FOR THE MANUFACTURE OR SALE OF ITEMS WITHOUT WRITTEN PERMISSION. COPYRIGHT © 1976, DIGITAL EQUIPMENT CORPORATION"

REVISIONS		
CHK	CHANGE NO.	REV

DRN. D. Lantley DATE 15-NOV-76
ENG. M. Anschel DATE 14 NOV 76
CHK D. Milne DATE 15-NOV-76
BOARD LOCATION: 1AF82
SHEET 1 OF 1
DMCYER.DRW[4,36] 12-NOV-76 14:11
NEXT HIGHER ASSEMBLY: 8-DD-M8563-0
FIRST USED ON OPTION/MODEL: DMA20

TITLE: ADAPTER INTERFACE DMA20 BOARD 2

SIZE	CODE	NUMBER	REV.
D	CS	M8563-0-DMC4	C

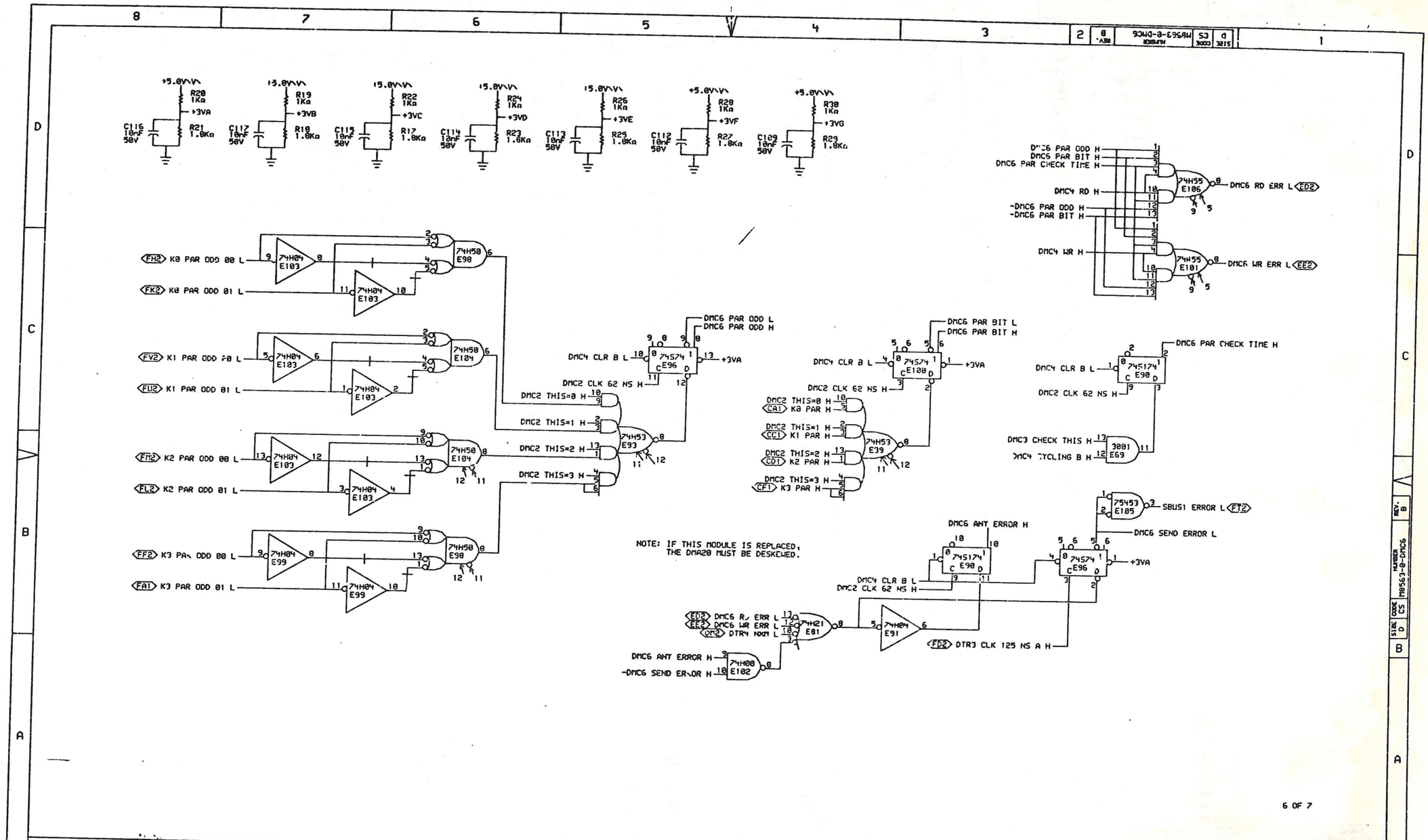
+5.0V
R20 1KΩ
+3VA
C116 10nF 50V
R21 1.0KΩ
15.0V
R19 1KΩ
+3VB
C117 10nF 50V
R18 1.0KΩ
R22 1KΩ
+3VC
C115 10nF 50V
R17 1.0KΩ
R24 1KΩ
+3VD
C114 10nF 50V
R23 1.0KΩ
R26 1KΩ
+3VE
C113 10nF 50V
R25 1.0KΩ
R28 1KΩ
+3VF
C112 10nF 50V
R27 1.0KΩ
R30 1KΩ
+3VG
C109 10nF 50V
R29 1.0KΩ
FH2 K0 PAR ODD 00 L
FK2 K0 PAR ODD 01 L
FV2 K1 PAR ODD 00 L
FU2 K1 PAR ODD 01 L
FM2 K2 PAR ODD 00 L
FL2 K2 PAR ODD 01 L
FF2 K3 PAR ODD 00 L
FA1 K3 PAR ODD 01 L
74H04 E103
74H50 E98
74H50 E104
74H50 E104
74H50 E98
DMC6 PAR ODD L
DMC6 PAR ODD H
DMC4 CLR B L
DMC2 CLK 62 NS H
74S74 E96
DMC2 THIS=0 H
DMC2 THIS=1 H
DMC2 THIS=2 H
DMC2 THIS=3 H
74H53 E93
DMC6 PAR BIT L
DMC6 PAR BIT H
74S74 E100
K0 PAR H
K1 PAR H
K2 PAR H
K3 PAR H
74H53 E39
DMC6 PAR CHECK TIME H
74S174 E90
DMC3 CHECK THIS H
DMC4 CYCLING B H
3001 E69
DMC6 PAR ODD H
DMC6 PAR BIT H
DMC6 PAR CHECK TIME H
DMC4 RD H
-DMC6 PAR ODD H
-DMC6 PAR BIT H
DMC4 WR H
74H55 E106
74H55 E101
DMC6 RD ERR L
DMC6 WR ERR L
ED2
EE2
75453 E105
SBUS1 ERROR L
FT2
DMC6 SEND ERROR L
DMC6 ANY ERROR H
74S174 E90
74S74 E96
+3VA
DMC4 CLR B L
DMC2 CLK 62 NS H
DMC6 RD ERR
DMC6 WR ERR
DTR4 NOW L
74H21 E01
74H04 E91
DTR3 CLK 125 NS A H
DMC6 ANY ERROR H
-DMC6 SEND ERROR H
74H00 E102
NOTE: IF THIS MODULE IS REPLACED, THE DMA20 MUST BE DESKEWED.
6 OF 7
*THIS DRAWING AND SPECIFICATIONS, HEREIN, ARE THE PROPERTY OF DIGITAL EQUIPMENT CORPORATION AND SHALL NOT BE REPRODUCED OR COPIED OR USED IN WHOLE OR IN PART AS THE BASIS FOR THE MANUFACTURE OR SALE OF ITEMS WITHOUT WRITTEN PERMISSION.
COPYRIGHT © 1976, DIGITAL EQUIPMENT CORPORATION
REVISIONS
CHK CHANGE NO. REV
DRAWN
DATE 19-NOV-75
ENG.
DATE 14 NOV 74
BOARD LOCATIONS: 1 OF 2
SHEET 1 OF 1
NEXT H GHER ASSEMBLY:
FIRST USED ON OPTION/MODEL: DMA20
B-DD-M8563-0
TITLE: ADAPTER INTERFACE DMA20 BOARD 2
SIZE D
CODE CS
NUMBER M8563-0-DMC6
REV. B

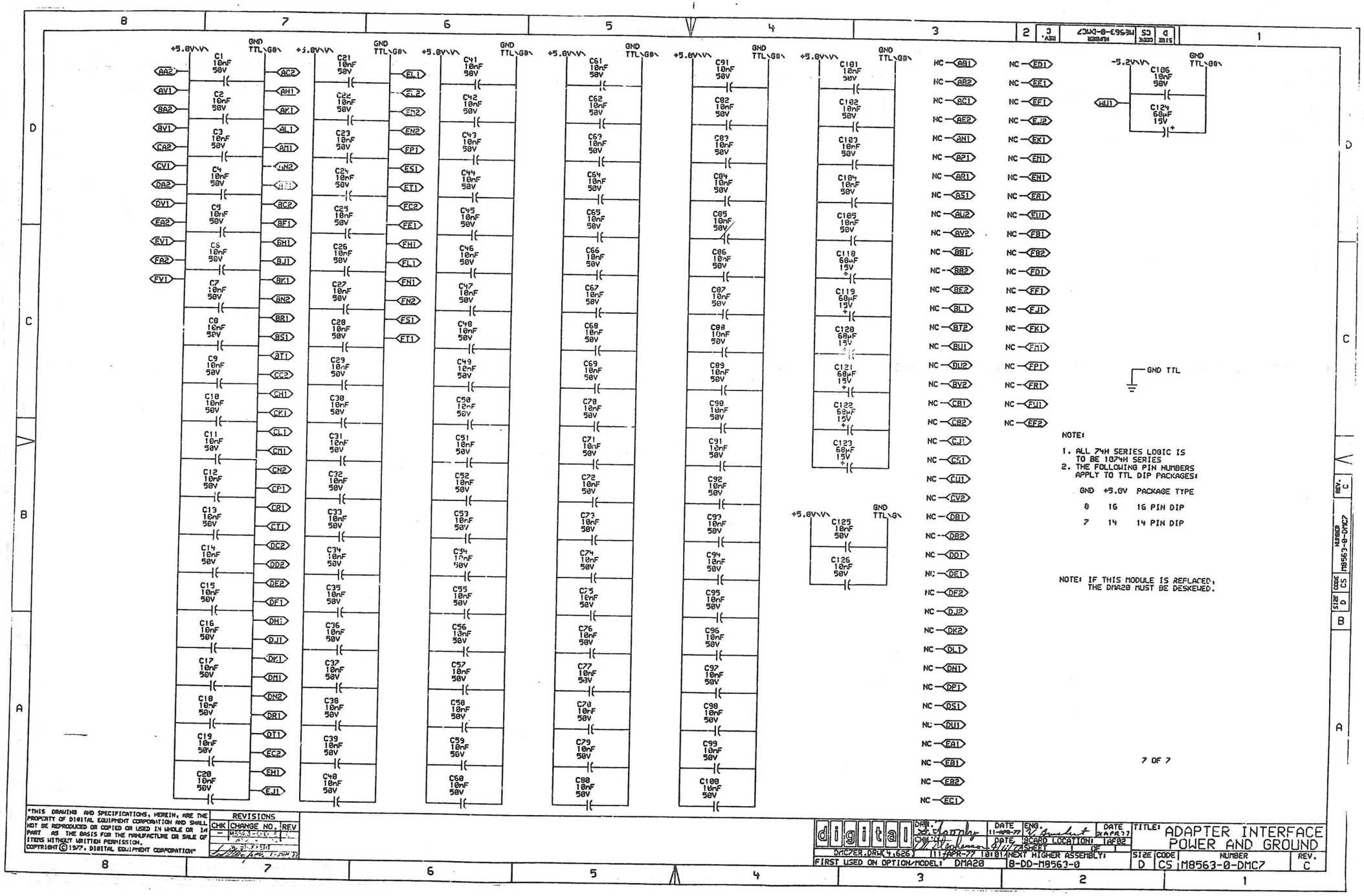
+5.0V\V\
GND TTL\G0\
C1 10nF 50V
C2 10nF 50V
C3 10nF 50V
C4 10nF 50V
C5 10nF 50V
C6 10nF 50V
C7 10nF 50V
C8 10nF 50V
C9 10nF 50V
C10 10nF 50V
C11 10nF 50V
C12 10nF 50V
C13 10nF 50V
C14 10nF 50V
C15 10nF 50V
C16 10nF 50V
C17 10nF 50V
C18 10nF 50V
C19 10nF 50V
C20 10nF 50V
C21 10nF 50V
C22 10nF 50V
C23 10nF 50V
C24 10nF 50V
C25 10nF 50V
C26 10nF 50V
C27 10nF 50V
C28 10nF 50V
C29 10nF 50V
C30 10nF 50V
C31 10nF 50V
C32 10nF 50V
C33 10nF 50V
C34 10nF 50V
C35 10nF 50V
C36 10nF 50V
C37 10nF 50V
C38 10nF 50V
C39 10nF 50V
C40 10nF 50V
C41 10nF 50V
C42 10nF 50V
C43 10nF 50V
C44 10nF 50V
C45 10nF 50V
C46 10nF 50V
C47 10nF 50V
C48 10nF 50V
C49 10nF 50V
C50 10nF 50V
C51 10nF 50V
C52 10nF 50V
C53 10nF 50V
C54 10nF 50V
C55 10nF 50V
C56 10nF 50V
C57 10nF 50V
C58 10nF 50V
C59 10nF 50V
C60 10nF 50V
C61 10nF 50V
C62 10nF 50V
C63 10nF 50V
C64 10nF 50V
C65 10nF 50V
C66 10nF 50V
C67 10nF 50V
C68 10nF 50V
C69 10nF 50V
C70 10nF 50V
C71 10nF 50V
C72 10nF 50V
C73 10nF 50V
C74 10nF 50V
C75 10nF 50V
C76 10nF 50V
C77 10nF 50V
C78 10nF 50V
C79 10nF 50V
C80 10nF 50V
C81 10nF 50V
C82 10nF 50V
C83 10nF 50V
C84 10nF 50V
C85 10nF 50V
C86 10nF 50V
C87 10nF 50V
C88 10nF 50V
C89 10nF 50V
C90 10nF 50V
C91 10nF 50V
C92 10nF 50V
C93 10nF 50V
C94 10nF 50V
C95 10nF 50V
C96 10nF 50V
C97 10nF 50V
C98 10nF 50V
C99 10nF 50V
C100 10nF 50V
C101 10nF 50V
C102 10nF 50V
C103 10nF 50V
C104 10nF 50V
C105 10nF 50V
C119 68µF 15V
C120 68µF 15V
C121 68µF 15V
C122 68µF 15V
C123 68µF 15V
C125 10nF 50V
C126 10nF 50V
-5.2V\V\
C106 10nF 50V
C124 68µF 15V
GND TTL
NOTE:
1. ALL 74H SERIES LOGIC IS TO BE 1074H SERIES
2. THE FOLLOWING PIN NUMBERS APPLY TO TTL DIP PACKAGES:
GND +5.0V PACKAGE TYPE
8 16 16 PIN DIP
7 14 14 PIN DIP
NOTE: IF THIS MODULE IS REPLACED, THE DMA20 MUST BE DESKEWED.
7 OF 7
"THIS DRAWING AND SPECIFICATIONS, HEREIN, ARE THE PROPERTY OF DIGITAL EQUIPMENT CORPORATION AND SHALL NOT BE REPRODUCED OR COPIED OR USED IN WHOLE OR IN PART AS THE BASIS FOR THE MANUFACTURE OR SALE OF ITEMS WITHOUT WRITTEN PERMISSION. COPYRIGHT © 1977, DIGITAL EQUIPMENT CORPORATION"
REVISIONS
CHK CHANGE NO. REV
digital
DRW. DATE ENG. DATE
CHK. DATE SCARD LOCATION: 1AF82
SHEET OF
DMC7ER.DRW(4,626) 11-APR-77 18:18:14 NEXT HIGHER ASSEMBLY:
FIRST USED ON OPTION/MODEL: DMA20 B-DD-M8563-0
TITLE: ADAPTER INTERFACE POWER AND GROUND
SIZE D CODE CS NUMBER M8563-0-DMC7 REV. C

DRAWING NUMBER	PAGE	PART NO.	DESCRIPTION	REVISIONS	
			ECO NUMBER	-	1
		M8580-00	MODULE REVISION	A	A1
D-UA-M8580-0-0	4		DUAL TRANSLATOR	A	A
K-PL-M8580-0-DBP	2		PARTS LIST, M8580	A	B
D-CS-M8580-0-DT01	1		DUAL TRANSLATOR	-	-
D-CS-M8580-0-DT02	1		DATA TRNCVR 0-5	-	-
D-CS-M8580-0-DT03	1		DATA TRNCVR 6-11	-	-
D-CS-M8580-0-DT04	1		DATA TRNCVR 12-17	-	-
D-CS-M8580-0-DT05	1		ADDRESS DRIVERS	-	-
D-CS-M8580-0-DT06	1		CTRL & REF VOLT	-	A
D-CS-M8580-0-DT07	1		MEM DATA DRVRS	-	-
D-CS-M8580-0-DT08	1		POWER. GND. CAPS.	-	-
D-CS-M8580-0-RES	1		TERMINATORS	-	-
K-PC-M8580-0-DBC	-		CALDEC DESIGN DATA BASE	A	A
D-DD-5012771-0	1		DRAWING DIRECTORY, 5012771	REF	REF
POO-M8580-00	-		PROCESS SHEET (REF ONLY)	-	-

"THIS DRAWING AND SPECIFICATIONS, HEREIN, ARE THE PROPERTY OF DIGITAL EQUIPMENT CORPORATION AND SHALL NOT BE REPRODUCED OR COPIED OR USED IN WHOLE OR IN PART AS THE BASIS FOR THE MANUFACTURE OR SALE OF ITEMS WITHOUT WRITTEN PERMISSION. COPYRIGHT © 1984, DIGITAL EQUIPMENT CORPORATION"

REVISIONS		
CHK	CHANGE NO.	REV

digital

DRN. D.DELLORCO DATE 09-NOV-84
CHK'D. DATE 09-NOV-84
ENG. DATE 09-NOV-84
BOARD LOCATION: N/A
SHEET 1 OF 1
DSK:M8580A.T2P[4,36] 09-NOV-84 16:26
NEXT HIGHER ASSEMBLY: N/A
FIRST USED ON OPTION/MODEL: N/A

TITLE: DRAWING DIRECTORY M8580

SIZE	CODE	NUMBER	REV.
D	DD	M8580-0	A

MRO 1

THIS DRAWING AND SPECIFICATIONS, HERETO, ARE THE PROPERTY OF DIGITAL EQUIPMENT CORPORATION AND SHALL NOT BE REPRODUCED OR COPIED OR USED IN WHOLE OR IN PART AS THE BASIS FOR MANUFACTURE OR SALE BY OTHERS WITHOUT WRITTEN PERMISSION.
COPYRIGHT © 1972 DIGITAL EQUIPMENT CORPORATION

NOTES: 1. FOR POWER & GND PINS REFER TO: D-CS-M8580-0-DT08

CHK	CHANGE NO	REV

ETCH REV.	B
P.C. DESIGN DATA BASE REV.	A

SIGNATURES	DATE
DRN.	
CHK'D.	
ENG.	
PROJ. ENG.	
PROD.	
SCALE 2/1	
SHT. 1 OF 4	
NEXT HIGHER ASSY. D-DD-M8580-0	

digital

TITLE DUAL TRANSLATOR

SIZE	CODE	NUMBER	REV
D	UA	M8580-0-0	A

1 MS# 104236

THIS DRAWING AND SPECIFICATION, HEREIN, ARE THE PROPERTY OF DIGITAL EQUIPMENT CORPORATION, AND SHALL NOT BE REPRODUCED IN COPY OR USED IN WHOLE OR IN PART AS THE BASIS FOR THE MANUFACTURE OR SALE OF ITEMS WITHOUT WRITTEN PERMISSION. COPYRIGHT © 1977 DIGITAL EQUIPMENT CORPORATION

LAYER 1

M8580 5012771B

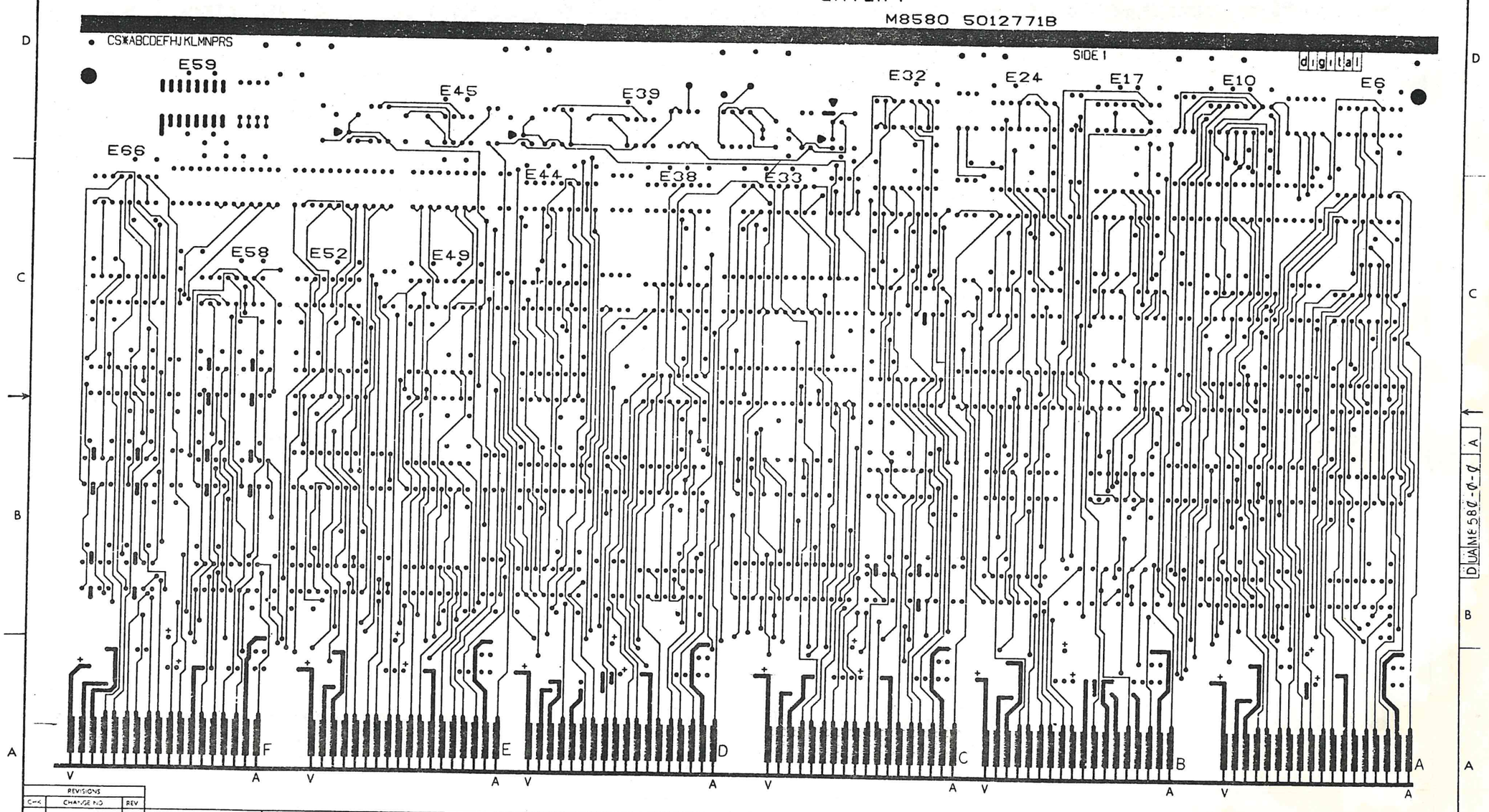

REVISIONS		
CHK	CHANGE NO	REV

TITLE	SIZE	CODE	NUMBER	REV
DUAL TRANSLATOR	D	UA	M8580-0-0	A
SCALE 2/1	SHEET 2 OF 4	DIST.		

mr

THIS DRAWING AND SPECIFICATIONS, HEREIN, ARE THE PROPERTY OF DIGITAL EQUIPMENT CORPORATION, AND SHALL NOT BE REPRODUCED OR COPIED OR USED IN WHOLE OR IN PART AS THE BASIS FOR THE MANUFACTURE OR SALE OF ITEMS WITHOUT WRITTEN PERMISSION.
COPYRIGHT © 1977 DIGITAL EQUIPMENT CORPORATION

LAYER 4

REVISIONS		
CHK	CHANGE NO	REV

TITLE	SIZE	CODE	NUMBER	REV.
DUAL TRANSLATOR	D	UA	M8580-0-0	A
SCALE 2/1	SHEET 3 OF 4	DIST.		

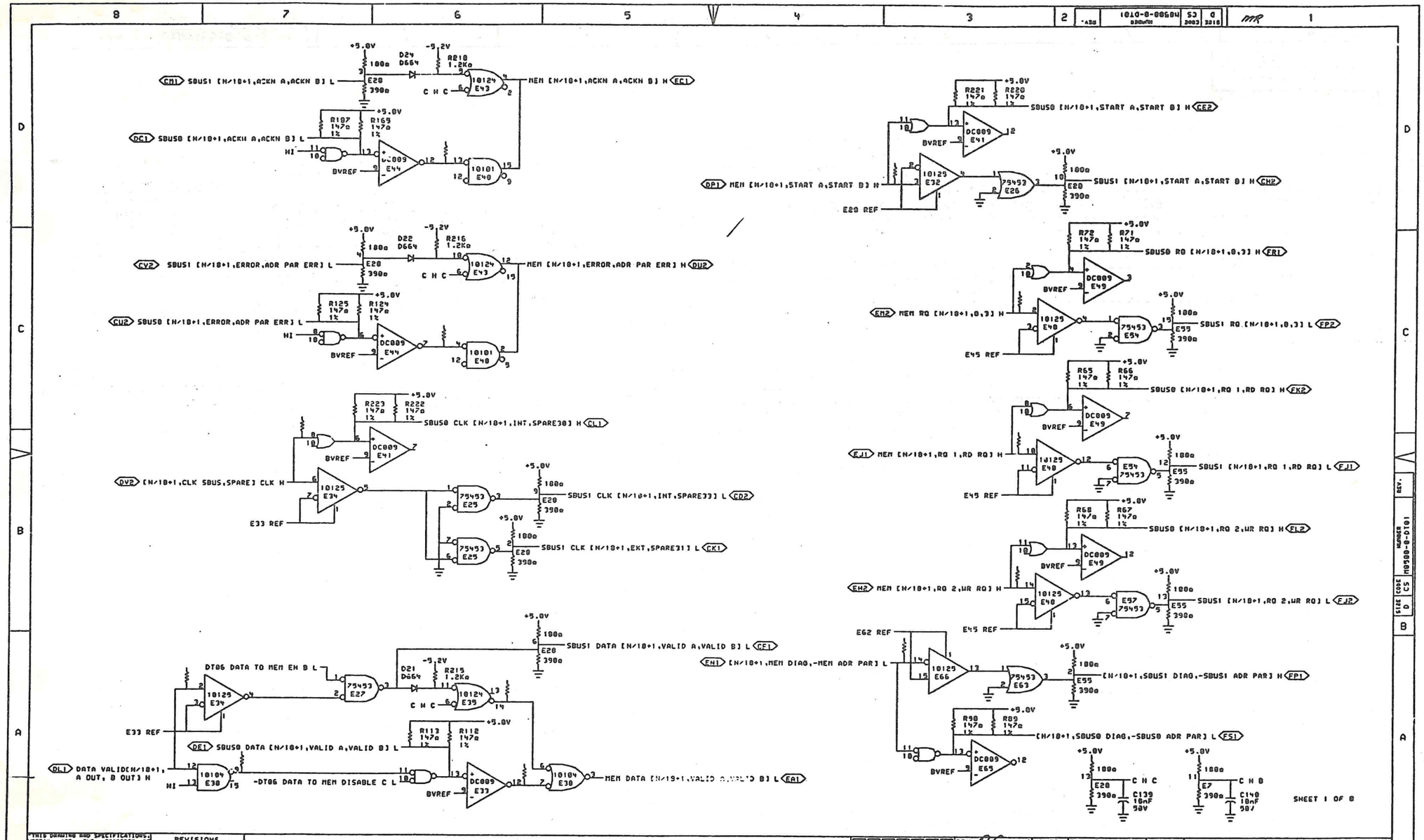

REVISIONS		
CHK	CHANGE NO.	REV

"THIS DRAWING AND SPECIFICATIONS, HEREIN, ARE THE PROPERTY OF DIGITAL EQUIPMENT CORPORATION AND SHALL NOT BE REPRODUCED OR COPIED OR USED IN WHOLE OR IN PART AS THE BASIS FOR THE MANUFACTURE OR SALE OF ITEMS WITHOUT WRITTEN PERMISSION. COPYRIGHT © 1978, DIGITAL EQUIPMENT CORPORATION"

digital

DRN. G Smith DATE 18-JUL-78 ENG. E. Fabio DATE 18-JUL-78
CHK. D. Lewis DATE 18 JUL 78 BOARD LOCATION: SHEET 1 OF 1

PU9:(M8580-MOS)DT01EF.DRW18-JUL-78 11:35 NEXT HIGHER ASSEMBLY: D-DD-M8580-0
FIRST USED ON OPTION/MODEL: MF20

TITLE: DUAL TRANSLATOR

SIZE	CODE	NUMBER	REV.
D	CS	M8580-0-DT01	

THIS DRAWING AND SPECIFICATIONS, HEREIN, ARE THE PROPERTY OF DIGITAL EQUIPMENT CORPORATION AND SHALL NOT BE REPRODUCED OR COPIED OR USED IN WHOLE OR IN PART AS THE BASIS FOR THE MANUFACTURE OR SALE OF ITEMS WHOLLY OR IN PART WITHOUT PERMISSION.
COPYRIGHT © 1973 DIGITAL EQUIPMENT CORPORATION

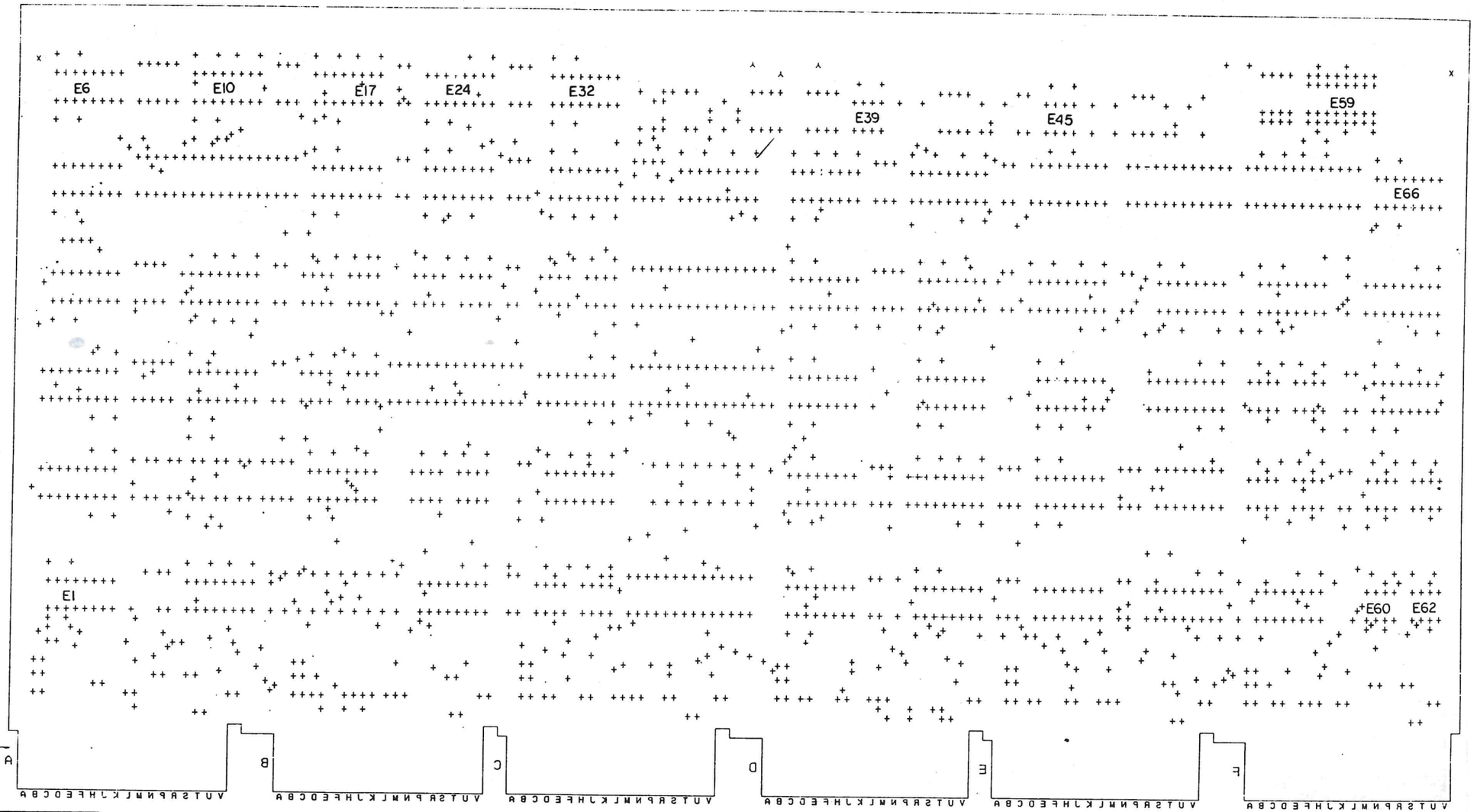

REVISIONS		
CHK	CHANGE NO	REV

TITLE	SIZE	CODE	NUMBER	REV.
DUAL TRANSLATOR	D	UA	M856Ø-Ø-Ø	A
SCALE 2/1 SHEET 4 OF 4	DIST			

me

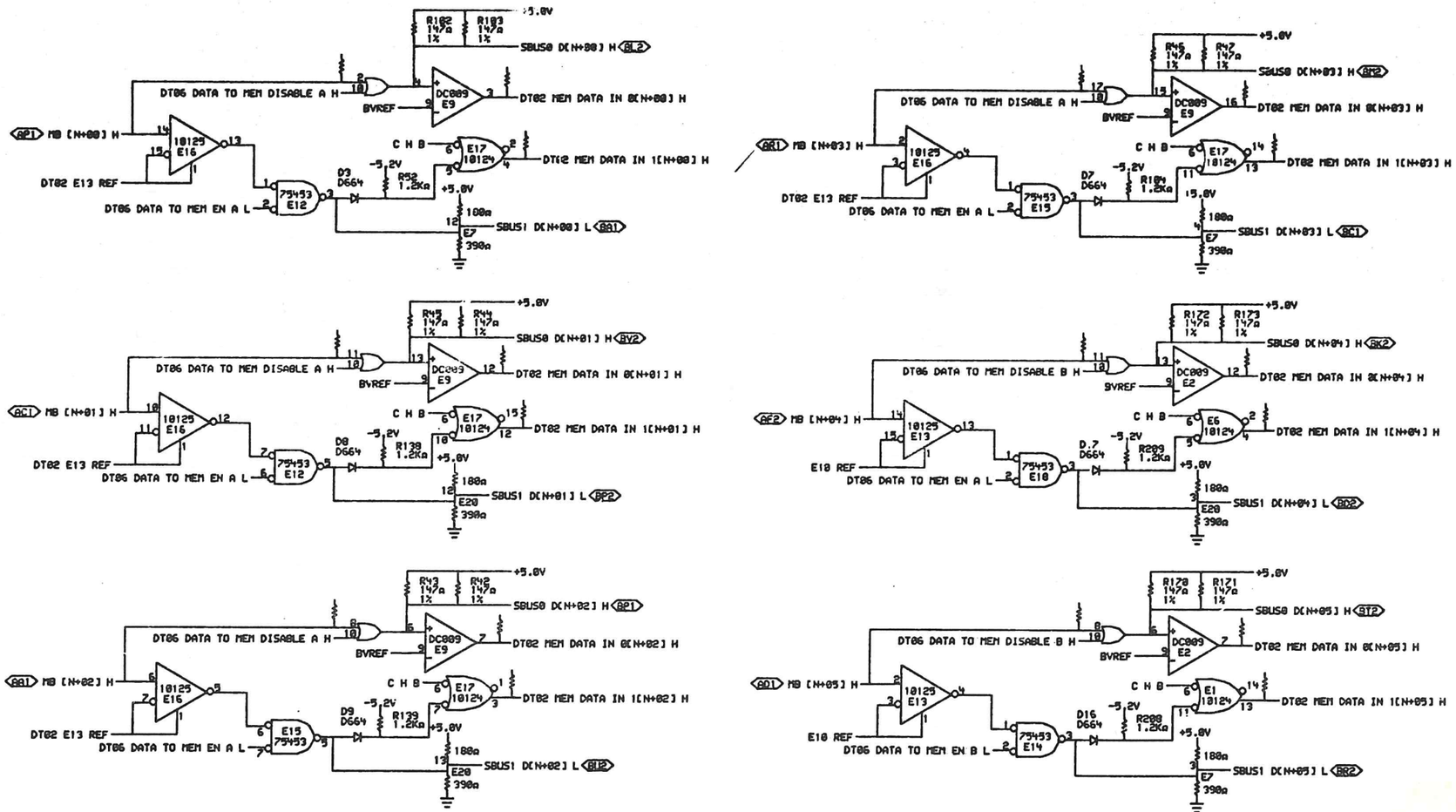

SHEET 2 OF 8

"THIS DRAWING AND SPECIFICATIONS, HEREIN, ARE THE PROPERTY OF DIGITAL EQUIPMENT CORPORATION AND SHALL NOT BE REPRODUCED OR COPIED OR USED IN WHOLE OR IN PART AS THE BASIS FOR THE MANUFACTURE OR SALE OF ITEMS WITHOUT WRITTEN PERMISSION. COPYRIGHT © 1978, DIGITAL EQUIPMENT CORPORATION"

REVISIONS		
CHK	CHANGE NO.	REV

digital

DRN. C Smith DATE 11-JUL-78 ENG. D J Chin DATE 7-18-78
CHKD. Lucius DATE 18-JUL-78 BOARD LOCATION: SHEET OF 1
PUBICM8580-M05\DT3REF.DRW106-JUN-78 10:33 NEXT HIGHER ASSEMBLY: D-DD-M8580-0
FIRST USED ON OPTION/MODEL: MF20

TITLE: DUAL TRANSLATOR DATA TRNCVR 0-5

SIZE	CODE	NUMBER	REV.
D	CS	M8580-0-DT02	

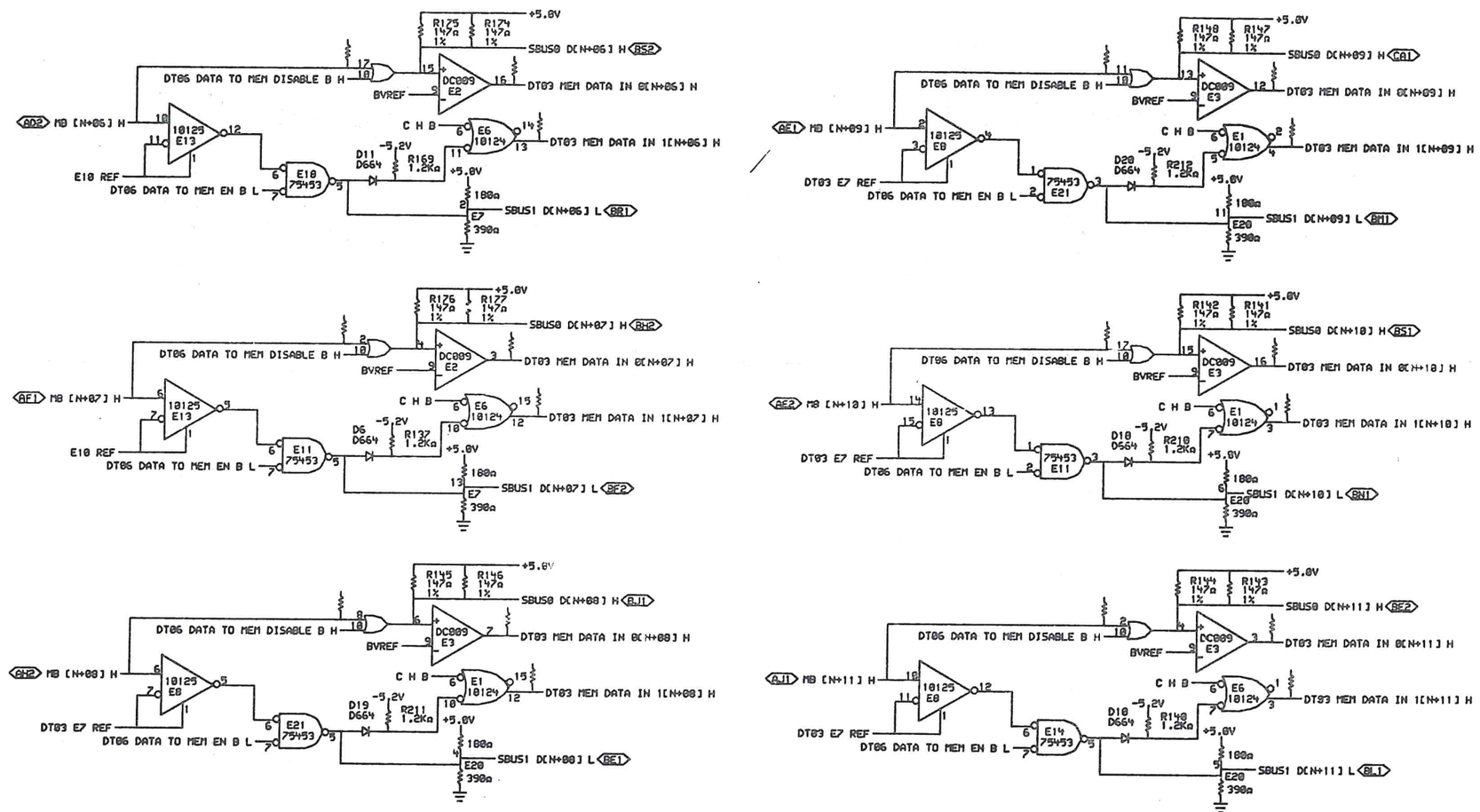

*THIS DRAWING AND SPECIFICATIONS, HEREIN, ARE THE PROPERTY OF DIGITAL EQUIPMENT CORPORATION AND SHALL NOT BE REPRODUCED OR COPIED OR USED IN WHOLE OR IN PART AS THE BASIS FOR THE MANUFACTURE OR SALE OF ITEMS WITHOUT WRITTEN PERMISSION. COPYRIGHT © 1970, DIGITAL EQUIPMENT CORPORATION.

REVISIONS		
CHK	CHANGE NO.	REV

digital

DRN. C. Smith DATE 14-JUN-78 ENG. D.J. Chin DATE 7-11-78 TITLE: DUAL TRANSLATOR DATA TRNCVR 6-11

CHK. G. Lucin DATE 18-Jul-78 BOARD LOCATION: SHEET 1 OF 1

PUB:<M8580-MOS>DT03F.DRW 06-JUN-78 10:34 NEXT HIGHER ASSEMBLY: D-DD-M8580-0

FIRST USED ON OPTION/MODEL: MF20

SIZE	CODE	NUMBER	REV.
D	CS	M8580-0-DT03	

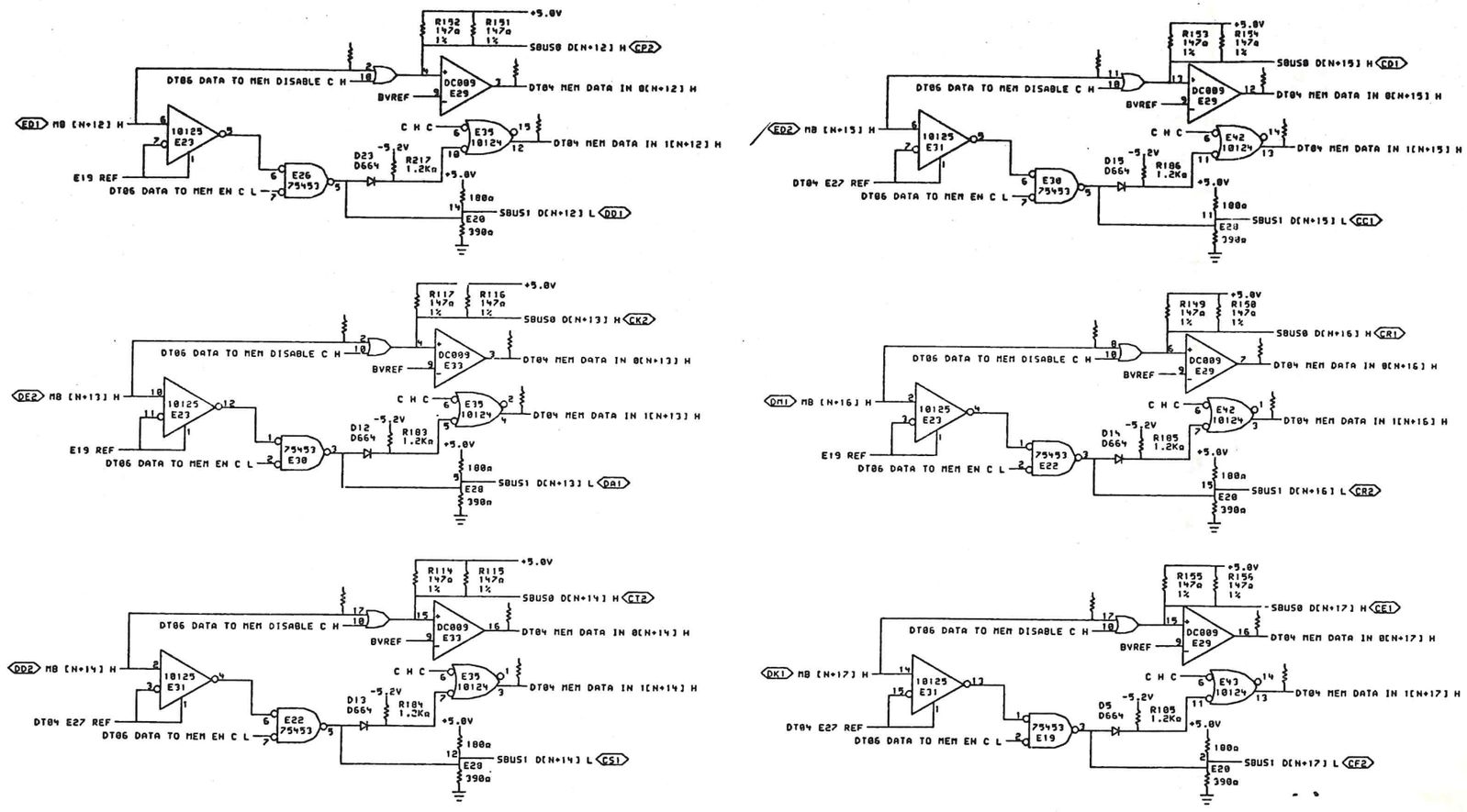

SHEET 4 OF 8

"THIS DRAWING AND SPECIFICATIONS, HEREIN, ARE THE PROPERTY OF DIGITAL EQUIPMENT CORPORATION AND SHALL NOT BE REPRODUCED OR COPIED OR USED IN WHOLE OR IN PART AS THE BASIS FOR THE MANUFACTURE OR SALE OF ITEMS WITHOUT WRITTEN PERMISSION. COPYRIGHT © 1978, DIGITAL EQUIPMENT CORPORATION"

REVISIONS		
CHK	CHANGE NO.	REV

digital

DRN. C Smith DATE 18-JUL-78
CHK Lucius DATE 18-JUL-78
ENG. DATE 17-JUL-78
BOARD LOCATION:
SHEET 1 OF 1
PUB:<M8580-MOS>DT04EF.DRW 18-JUL-78 11:38
NEXT HIGHER ASSEMBLY:
FIRST USED ON OPTION/MODEL: MF20 D-DD-M8580-0

TITLE: DUAL TRANSLATOR DATA TRNCVR 12-17

SIZE	CODE	NUMBER	REV.
D	CS	M8580-0-DT04	

mr

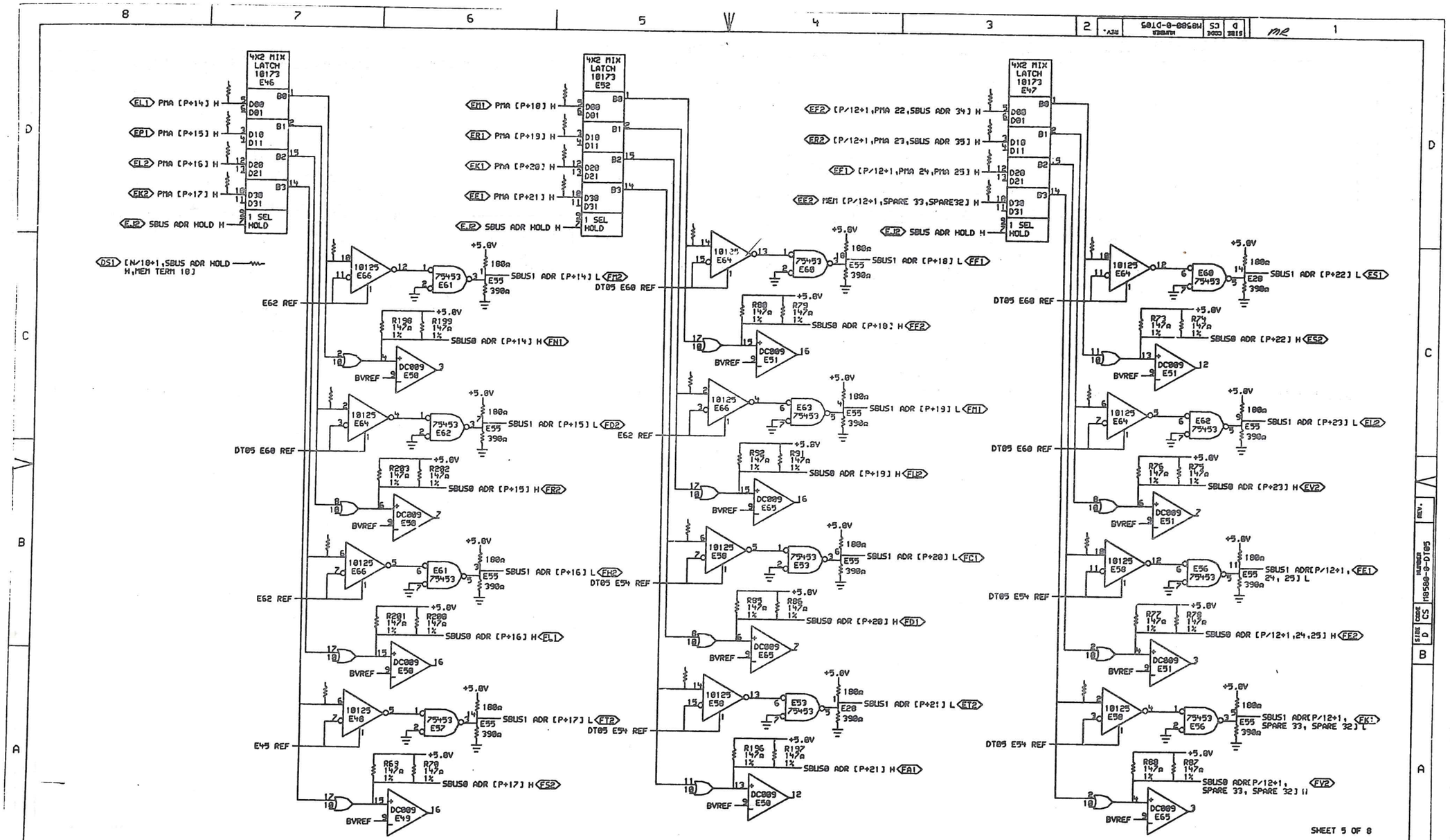

"THIS DRAWING AND SPECIFICATIONS, HEREIN, ARE THE PROPERTY OF DIGITAL EQUIPMENT CORPORATION AND SHALL NOT BE REPRODUCED OR COPIED OR USED IN WHOLE OR IN PART AS THE BASIS FOR THE MANUFACTURE OR SALE OF ITEMS WITHOUT WRITTEN PERMISSION. COPYRIGHT © 1970, DIGITAL EQUIPMENT CORPORATION"

REVISIONS		
CHK	CHANGE NO.	REV

digital

DRN. C Smith DATE 11-22-70 ENG. DJ Chin DATE 7-19-71 TITLE: DUAL TRANSLATOR ADDRESS DRIVERS

CHK. DJ DATE 11-22-70 BOARD LOCATION: 1 OF 1

PLA: (M8580-MOS)DT05EF.2RW 26-JUN-70 10:36 NEXT HIGHER ASSEMBLY: D-DD-M8580-0

FIRST USED ON OPTION/MODEL: MF20

SIZE	CODE	NUMBER	REV.
D	CS	M8580-0-DT05	

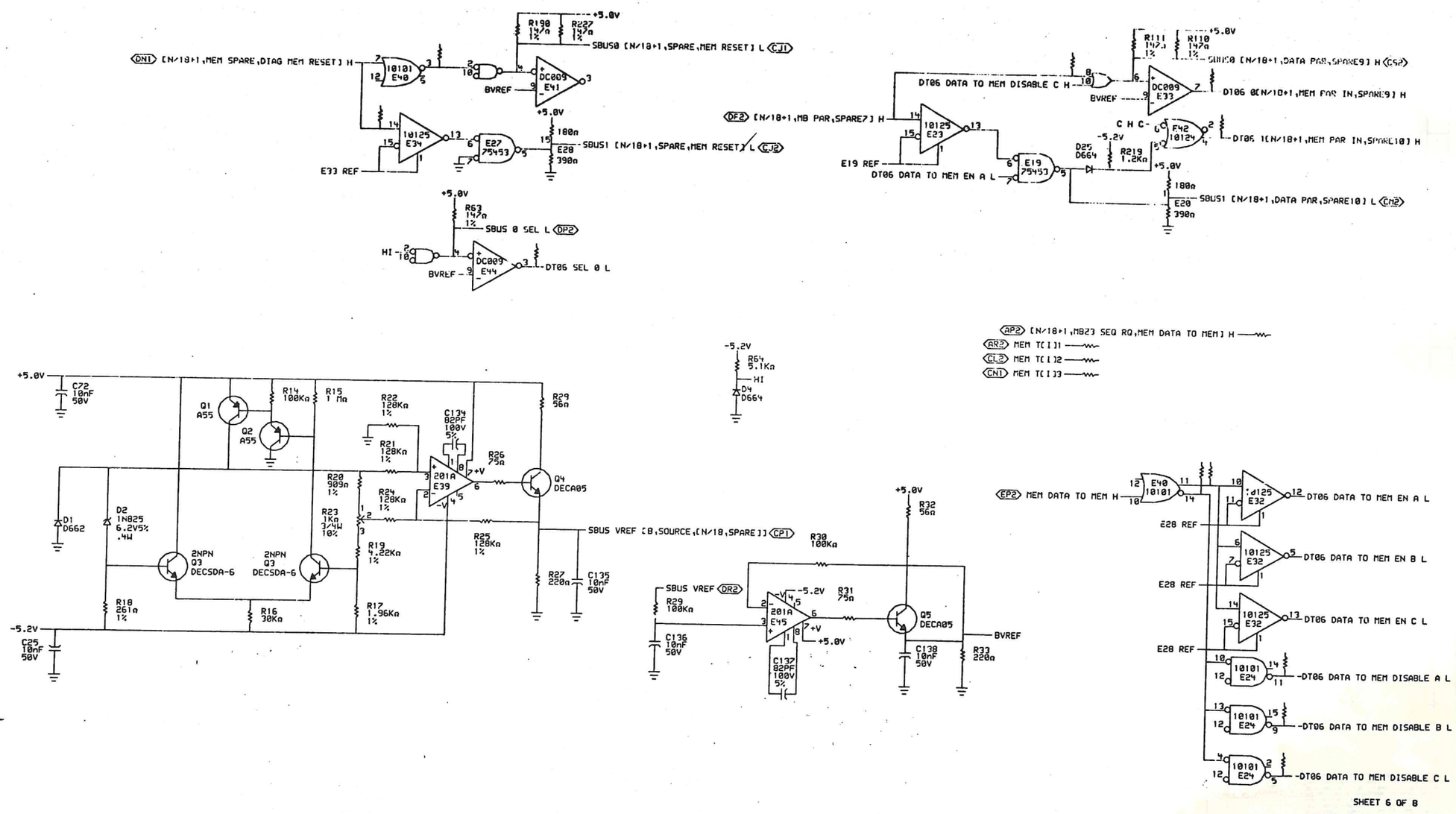

"THIS DRAWING AND SPECIFICATIONS, HEREIN, ARE THE PROPERTY OF DIGITAL EQUIPMENT CORPORATION AND SHALL NOT BE REPRODUCED OR COPIED OR USED IN WHOLE OR IN PART AS THE BASIS FOR THE MANUFACTURE OR SALE ITEMS WITHOUT WRITTEN PERMISSION. COPYRIGHT © 1984, DIGITAL EQUIPMENT CORPORATION"

REVISIONS		
CHK	CHANGE NO.	REV

digital

DRN. CHK'D. DATE 28-NOV-84 ENG. DATE 29 NOV 84 BOARD LOCATION: SHEET 1 OF 1

SLOCOM:<BOLVEN.SCRATCH>DT06EF.DRW 28-NOV-84 09:40

FIRST USED ON OPTION/MODEL: MF20

NEXT HIGHER ASSEMBLY: D-DD-M8580-0

TITLE: DUAL TRANSLATOR CTRL & REF VOLT

SIZE	CODE	NUMBER	REV
D	CS	M8580-0-DT06	A

MRO 1

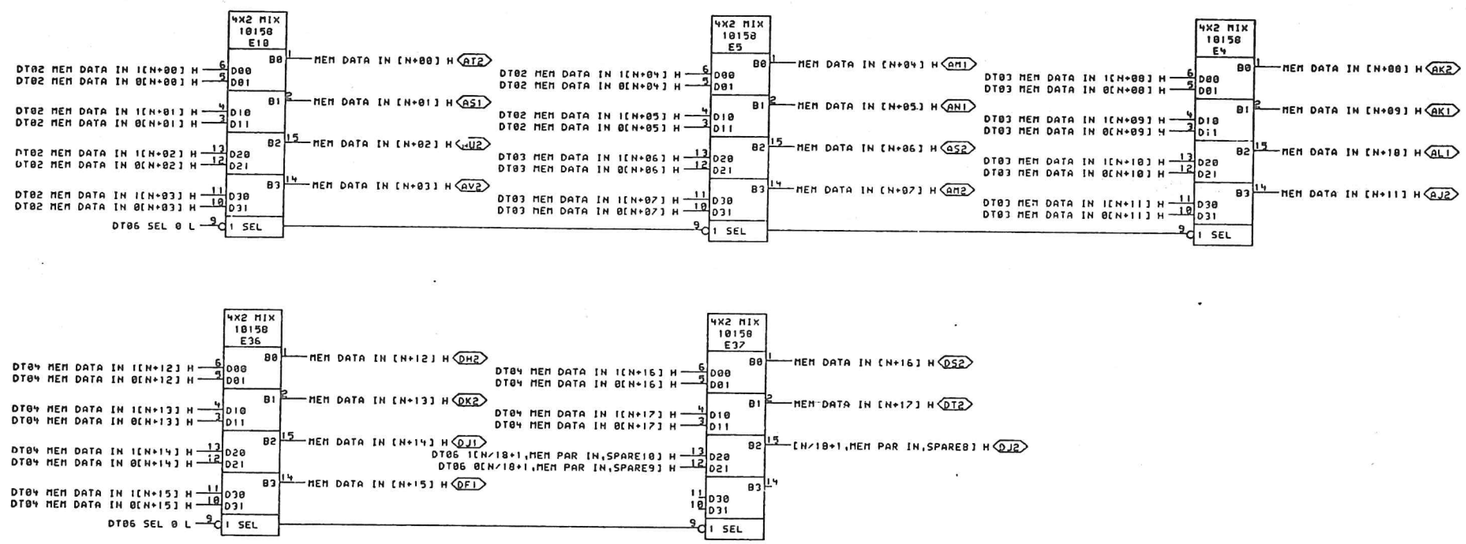

SHEET 7 OF 8

"THIS DRAWING AND SPECIFICATIONS, HEREIN, ARE THE PROPERTY OF DIGITAL EQUIPMENT CORPORATION AND SHALL NOT BE REPRODUCED OR COPIED OR USED IN WHOLE OR IN PART AS THE BASIS FOR THE MANUFACTURE OR SALE OF ITEMS WITHOUT WRITTEN PERMISSION. COPYRIGHT © 1979, DIGITAL EQUIPMENT CORPORATION"

REVISIONS		
CHK	CHANGE NO.	REV

digital

DRN. C Smith DATE 05-JUN-79 ENG. D Chen DATE 26-Jun-79
CHK'D. T Lucier DATE 19-Jul-79 BOARD LOCATION:
DT07EF.DRU[4,672] 05-JUN-79 16:53 SHEET 1 OF 1
FIRST USED ON OPTION/MODEL: MF20 NEXT HIGHER ASSEMBLY: D-DD-M8580-0

TITLE: BUS SELECT MEM DATA DRVRS

SIZE	CODE	NUMBER	REV.
D	CS	M8580-0-DT07	

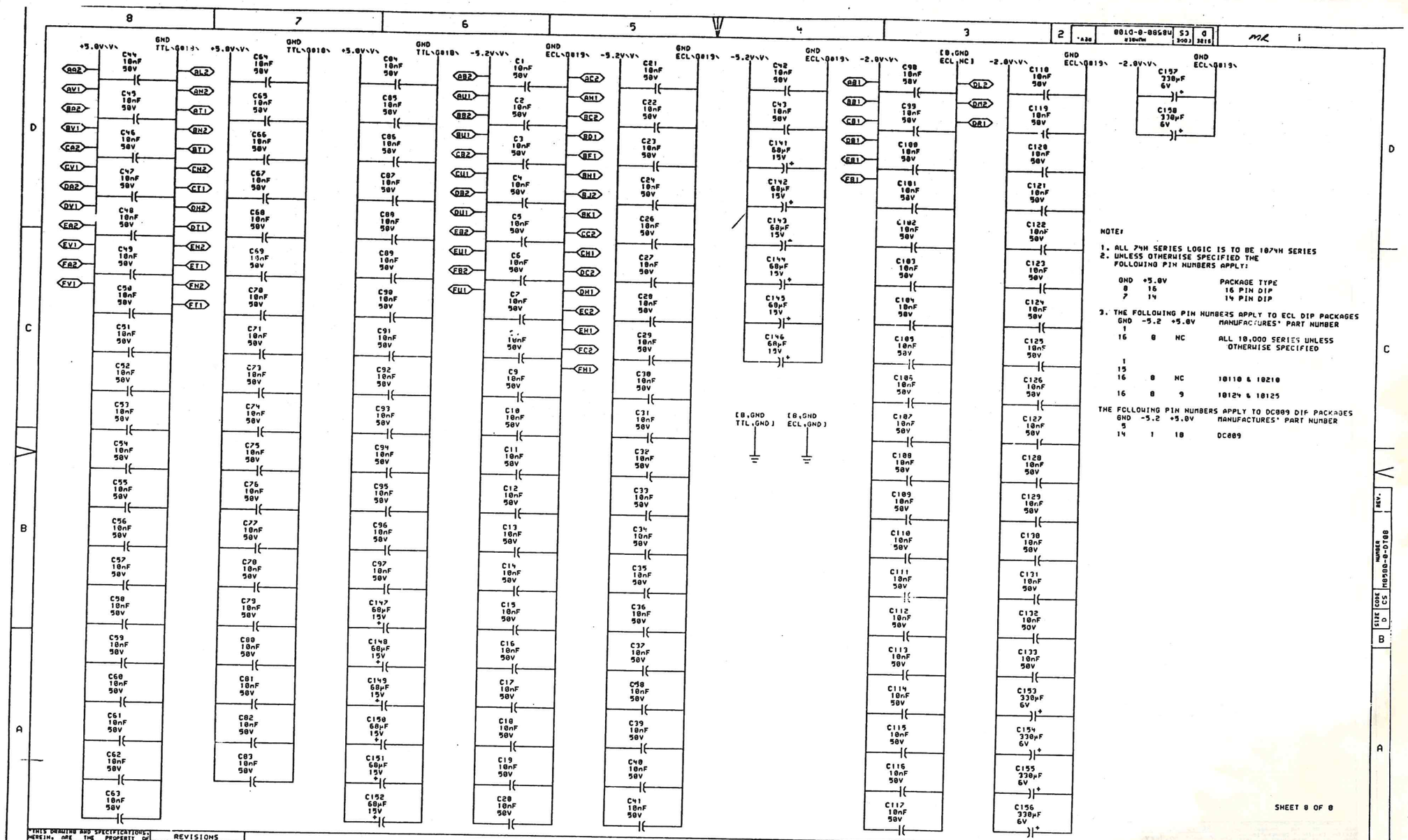

NOTE:

1. ALL 74H SERIES LOGIC IS TO BE 1074H SERIES
2. UNLESS OTHERWISE SPECIFIED THE FOLLOWING PIN NUMBERS APPLY:

GND	+5.0V	PACKAGE TYPE
8	16	16 PIN DIP
7	14	14 PIN DIP

3. THE FOLLOWING PIN NUMBERS APPLY TO ECL DIP PACKAGES

GND	-5.2	+5.0V	MANUFACTURES' PART NUMBER
1			
16	8	NC	ALL 10,000 SERIES UNLESS OTHERWISE SPECIFIED
1			
15			
16	8	NC	10110 & 10210
16	8	9	10124 & 10125

THE FOLLOWING PIN NUMBERS APPLY TO DC889 DIP PACKAGES

GND	-5.2	+5.0V	MANUFACTURES' PART NUMBER
5			
14	1	18	DC889

SHEET 8 OF 8

"THIS DRAWING AND SPECIFICATIONS, HEREIN, ARE THE PROPERTY OF DIGITAL EQUIPMENT CORPORATION AND SHALL NOT BE REPRODUCED OR COPIED OR USED IN WHOLE OR IN PART AS THE BASIS FOR THE MANUFACTURE OR SALE OF ITEMS WITHOUT WRITTEN PERMISSION. COPYRIGHT © 1970, DIGITAL EQUIPMENT CORPORATION"

REVISIONS		
CHK	CHANGE NO.	REV

digital

DTOBEF.DRW(4,672) 05-JUN-78 16:53

DRN: [illegible] DATE 06-JUN-78
CHK: [illegible] DATE
ENG: [illegible] DATE 2-Jun-78
BOARD LOCATION: [illegible] SHEET 1 OF 1
NEXT HIGHER ASSEMBLY: D-DD-M8580-0
FIRST USED ON OPTION/MODEL: MF20

TITLE: DUAL TRANSLATOR POWER. GND. CAPS.

SIZE	CODE	NUMBER	REV.
D	CS	M8580-0-DT08	

RESISTOR LOC(PIN)	SHOWN ON DRWB	REF	VALUE	TERMINATES SIGNAL
R61(1)	DT01	A6	68Ω	%E33(12)
R62(1)	DT01	A6	68Ω	%E35(14)
R109(1)	DT01	A7	68Ω	%E38(9)
R98(1)	DT06	B2	68Ω	%E40(11)
R13(1)	DT06	B2	68Ω	%E40(14)
R108(1)	DT06	D6	68Ω	%E40(3)
R228(1)	DT01	D6	68Ω	%E44(12)
R224(1)	DT01	C6	68Ω	%E44(7)
R97(1)	DT05	C7	68Ω	%E46(1)
R128(1)	DT05	A7	68Ω	%E46(14)
R94(1)	DT05	B7	68Ω	%E46(15)
R205(1)	DT05	C7	68Ω	%E46(2)
R167(1)	DT05	C2	68Ω	%E47(1)
R131(1)	DT05	A2	68Ω	%E47(14)
R130(1)	DT05	B2	68Ω	%E47(15)
R204(1)	DT05	C2	68Ω	%E47(2)
R166(1)	DT05	C5	68Ω	%E52(1)
R232(1)	DT05	A5	68Ω	%E52(14)
R93(1)	DT05	B5	68Ω	%E52(15)
R95(1)	DT05	C5	68Ω	%E52(2)
R60(1)	DT01	A8	68Ω	DATA VALID[N/18+1, A OUT, B OUT] H
R49(1)	DT02	D5	68Ω	DT02 MEM DATA IN 0[N+00] H
R51(1)	DT02	C5	68Ω	DT02 MEM DATA IN 0[N+01] H
R8(1)	DT02	B5	68Ω	DT02 MEM DATA IN 0[N+02] H
R6(1)	DT02	D2	68Ω	DT02 MEM DATA IN 0[N+03] H
R39(1)	DT02	C2	68Ω	DT02 MEM DATA IN 0[N+04] H
R41(1)	DT02	B2	68Ω	DT02 MEM DATA IN 0[N+05] H
R48(1)	DT02	C5	68Ω	DT02 MEM DATA IN 1[N+00] H
R50(1)	DT02	B5	68Ω	DT02 MEM DATA IN 1[N+01] H
R10(1)	DT02	A5	68Ω	DT02 MEM DATA IN 1[N+02] H
R7(1)	DT02	C2	68Ω	DT02 MEM DATA IN 1[N+03] H
R38(1)	DT02	B2	68Ω	DT02 MEM DATA IN 1[N+04] H
R40(1)	DT02	A2	68Ω	DT02 MEM DATA IN 1[N+05] H
R1(1)	DT03	D5	68Ω	DT03 MEM DATA IN 0[N+06] H
R3(1)	DT03	C5	68Ω	DT03 MEM DATA IN 0[N+07] H
R100(1)	DT03	B5	68Ω	DT03 MEM DATA IN 0[N+08] H
R132(1)	DT03	D2	68Ω	DT03 MEM DATA IN 0[N+09] H
R35(1)	DT03	C2	68Ω	DT03 MEM DATA IN 0[N+10] H
R37(1)	DT03	B2	68Ω	DT03 MEM DATA IN 0[N+11] H
R5(1)	DT03	D5	68Ω	DT03 MEM DATA IN 1[N+06] H

RESISTOR LOC(PIN)	SHOWN ON DRWB	REF	VALUE	TERMINATES SIGNAL
R2(1)	DT03	B5	68Ω	DT03 MEM DATA IN 1[N+07] H
R99(1)	DT03	A5	68Ω	DT03 MEM DATA IN 1[N+08] H
R101(1)	DT03	D2	68Ω	DT03 MEM DATA IN 1[N+09] H
R34(1)	DT03	B2	68Ω	DT03 MEM DATA IN 1[N+10] H
R36(1)	DT03	A2	68Ω	DT03 MEM DATA IN 1[N+11] H
R152(1)	DT04	D5	68Ω	DT04 MEM DATA IN 0[N+12] H
R164(1)	DT04	C5	68Ω	DT04 MEM DATA IN 0[N+13] H
R158(1)	DT04	B5	68Ω	DT04 MEM DATA IN 0[N+14] H
R159(1)	DT04	D2	68Ω	DT04 MEM DATA IN 0[N+15] H
R119(1)	DT04	C2	68Ω	DT04 MEM DATA IN 0[N+16] H
R121(1)	DT04	B2	68Ω	DT04 MEM DATA IN 0[N+17] H
R161(1)	DT04	D5	68Ω	DT04 MEM DATA IN 1[N+12] H
R163(1)	DT04	B5	68Ω	DT04 MEM DATA IN 1[N+13] H
R157(1)	DT04	A5	68Ω	DT04 MEM DATA IN 1[N+14] H
R160(1)	DT04	D2	68Ω	DT04 MEM DATA IN 1[N+15] H
R118(1)	DT04	B2	68Ω	DT04 MEM DATA IN 1[N+16] H
R120(1)	DT04	A2	68Ω	DT04 MEM DATA IN 1[N+17] H
R122(1)	DT06	D2	68Ω	DT06 0[N/18+1,MEM PAR IN,SPARE9] H
R123(1)	DT06	D2	68Ω	DT06 1[N/18+1,MEM PAR IN,SPARE10] H
R90(1)	DT06	A1	68Ω	DT06 DATA TO MEM DISABLE A H
R168(1)	DT06	A1	68Ω	DT06 DATA TO MEM DISABLE D H
R182(1)	DT06	A1	68Ω	DT06 DATA TO MEM DISABLE C H
R4(1)	DT06	C6	68Ω	-DT06 SEL 0 H
R12(1)	DT02	D6	68Ω	MB [N+00] H
R9(1)	DT02	C6	68Ω	MB [N+01] H
R54(1)	DT02	B6	68Ω	MB [N+02] H
R55(1)	DT02	D3	68Ω	MB [N+03] H
R180(1)	DT02	C3	68Ω	MB [N+04] H
R179(1)	DT02	B3	68Ω	MB [N+05] H
R181(1)	DT03	D6	68Ω	MB [N+06] H
R178(1)	DT03	C6	68Ω	MB [N+07] H
R134(1)	DT03	B6	68Ω	MB [N+08] H
R133(1)	DT03	D3	68Ω	MB [N+09] H
R135(1)	DT03	C3	68Ω	MB [N+10] H
R136(1)	DT03	B3	68Ω	MB [N+11] H
R57(1)	DT04	D6	68Ω	MB [N+12] H
R11(1)	DT04	C6	68Ω	MB [N+13] H
R107(1)	DT04	B6	68Ω	MB [N+14] H
R106(1)	DT04	D3	68Ω	MB [N+15] H
R53(1)	DT04	C3	68Ω	MB [N+16] H

RESISTOR LOC(PIN)	SHOWN ON DRWB	REF	VALUE	TERMINATES SIGNAL
R108(1)	DT04	B3	68Ω	MB [N+17] H
R129(1)	DT01	C3	68Ω	MEM RQ [N/18+1,0,3] H
R206(1)	DT06	C3	68Ω	MEM T[1]1
R214(1)	DT06	C3	68Ω	MEM T[1]2
R213(1)	DT06	C3	68Ω	MEM T[1]3
R126(1)	DT01	B3	68Ω	MEM [N/18+1,RQ 1,RD RQ] H
R127(1)	DT01	B3	68Ω	MEM [N/18+1,RQ 2,WR RQ] H
R56(1)	DT01	D3	68Ω	MEM [N/18+1,START A,START B] H
R195(1)	DT05	D3	68Ω	MEM [P/12+1,SPARE 33,SPARE32] H
R230(1)	DT05	D7	68Ω	PMA [P+14] H
R231(1)	DT05	D7	68Ω	PMA [P+15] H
R191(1)	DT05	D7	68Ω	PMA [P+16] H
R229(1)	DT05	D7	68Ω	PMA [P+17] H
R82(1)	DT05	D5	68Ω	PMA [P+18] H
R81(1)	DT05	D5	68Ω	PMA [P+19] H
R83(1)	DT05	D5	68Ω	PMA [P+20] H
R84(1)	DT05	D5	68Ω	PMA [P+21] H
R189(1)	DT01	B7	68Ω	[N/18+1,CLK SBUS,SPARE] CLK H
R59(1)	DT06	D3	68Ω	[N/18+1,MB PAR,SPARE7] H
R207(1)	DT06	C2	68Ω	[N/18+1,MB2] SEQ RQ,MEM DATA TO MEM] H
R96(1)	DT01	A3	68Ω	-[N/18+1,MEM DIAG,-MEM ADR PAR] H
R225(1)	D106	D6	68Ω	[N/18+1,MEM SPARE,DIAG MEM RESET] H
R226(1)	DT05	C7	68Ω	[N/18+1,SBUS ADR HOLD H,MEM TERM 18]
R192(1)	DT05	D3	68Ω	[P/12+1,PMA 22,SBUS ADR 34] H
R193(1)	DT05	D3	68Ω	[P/12+1,PMA 23,SBUS ADR 35] H
R194(1)	DT05	D3	68Ω	[P/12+1,PMA 24,PMA 25] H

NOTE:

1. ALL TERMINATORS HAVE PIN TWO CONNECTED TO -2.0V AND ARE 5% 1/4WATT UNLESS OTHERWISE SPECIFIED
2. ENTRIES ARE SORTED BY SIGNAL NAME
3. % INDICATES OUTPUT OF DIP LOC AND () INDICATES PIN NUMBER

"THIS DRAWING AND SPECIFICATIONS, HEREIN, ARE THE PROPERTY OF DIGITAL EQUIPMENT CORPORATION AND SHALL NOT BE REPRODUCED OR COPIED OR USED IN WHOLE OR IN PART AS THE BASIS FOR THE MANUFACTURE OR SALE OF ITEMS WITHOUT WRITTEN PERMISSION. COPYRIGHT © 1978, DIGITAL EQUIPMENT CORPORATION"

REVISIONS		
CHK	CHANGE NO.	REV

DRN. C Smith DATE 09-JUN-78 ENG. D J Chin DATE 29 Jun 78
CHK. K. Lucas DATE 19 Jul 78 BOARD LOCATION:
F85801.DRW(4,622) 09-JUN-78 09:11 SHEET 1 OF 1
FIRST USED ON OPTION/MODEL: MF20 NEXT HIGHER ASSEMBLY: D-DD-M8580-0

TITLE: DUAL TRANSLATOR TERMINATORS

SIZE	CODE	NUMBER	REV.
D	CS	M8580-0-RES	

DRAWING NUMBER	PAGE	PART NO.	DESCRIPTION	REVISIONS	
			ECO NUMBER	-	1
		M8581-00	MODULE REVISION	A	A1
D-UA-M8581-0-0	5		XBUS TRANSLATOR	A	A
K-PL-M8581-0-DBP	2		PARTS LIST, M8581	A	B
D-CS-M8581-0-DX01	1		XBUS TRANSLATOR	-	-
D-CS-M8581-0-DX02	1		DATA TRNCVR 0-5	-	-
D-CS-M8581-0-DX03	1		DATA TRNCVR 6-11	-	-
D-CS-M8581-0-DX04	1		DATA TRNCVR 12-17	-	-
D-CS-M8581-0-DX05	1		ADDRESS DRIVERS	-	-
D-CS-M8581-0-DX06	1		CTRL & REF VOLT	-	A
D-CS-M8581-0-DX07	1		POWER. GND. CAPS.	-	-
D-CS-M8581-0-RES	1		TERMINATORS	-	-
K-PC-M8581-0-DBC	-		CALDEC DESIGN DATA BASE	A	A
D-DD-5013219-0	1		DRAWING DIRECTORY, 5013219	REF	REF
POO-M8581-00	-		PROCESS SHEET (REF ONLY)	-	-

"THIS DRAWING AND SPECIFICATIONS, HEREIN, ARE THE PROPERTY OF DIGITAL EQUIPMENT CORPORATION AND SHALL NOT BE REPRODUCED OR COPIED OR USED IN WHOLE OR IN PART AS THE BASIS FOR THE MANUFACTURE OR SALE OF ITEMS WITHOUT WRITTEN PERMISSION. COPYRIGHT © 1984, DIGITAL EQUIPMENT CORPORATION"

REVISIONS		
CHK	CHANGE NO.	REV

digital

DRN. D.DELLORCO DATE 09-NOV-84
CHK'D. D. Gasseres DATE 09-NOV-84
ENG. Arthur Turner DATE 09-NOV-84
BOARD LOCATION: N/A
SHEET 1 OF 1
DSK:M8581A.T2PC4.36J 09-NOV-84 15:48
FIRST USED ON OPTION/MODEL: N/A
NEXT HIGHER ASSEMBLY: N/A

TITLE: DRAWING DIRECTORY M8581

SIZE	CODE	NUMBER	REV.
D	DD	M8581-0	A

MRO 1

THIS DRAWING AND SPECIFICATIONS, HEREIN, ARE THE PROPERTY OF DIGITAL EQUIPMENT CORPORATION AND SHALL NOT BE REPRODUCED OR COPIED OR USED IN WHOLE OR IN PART AS THE BASIS FOR MANUFACTURE OR SALE OF ITEMS WITHOUT WRITTEN PERMISSION.
COPYRIGHT © DIGITAL EQUIPMENT CORPORATION

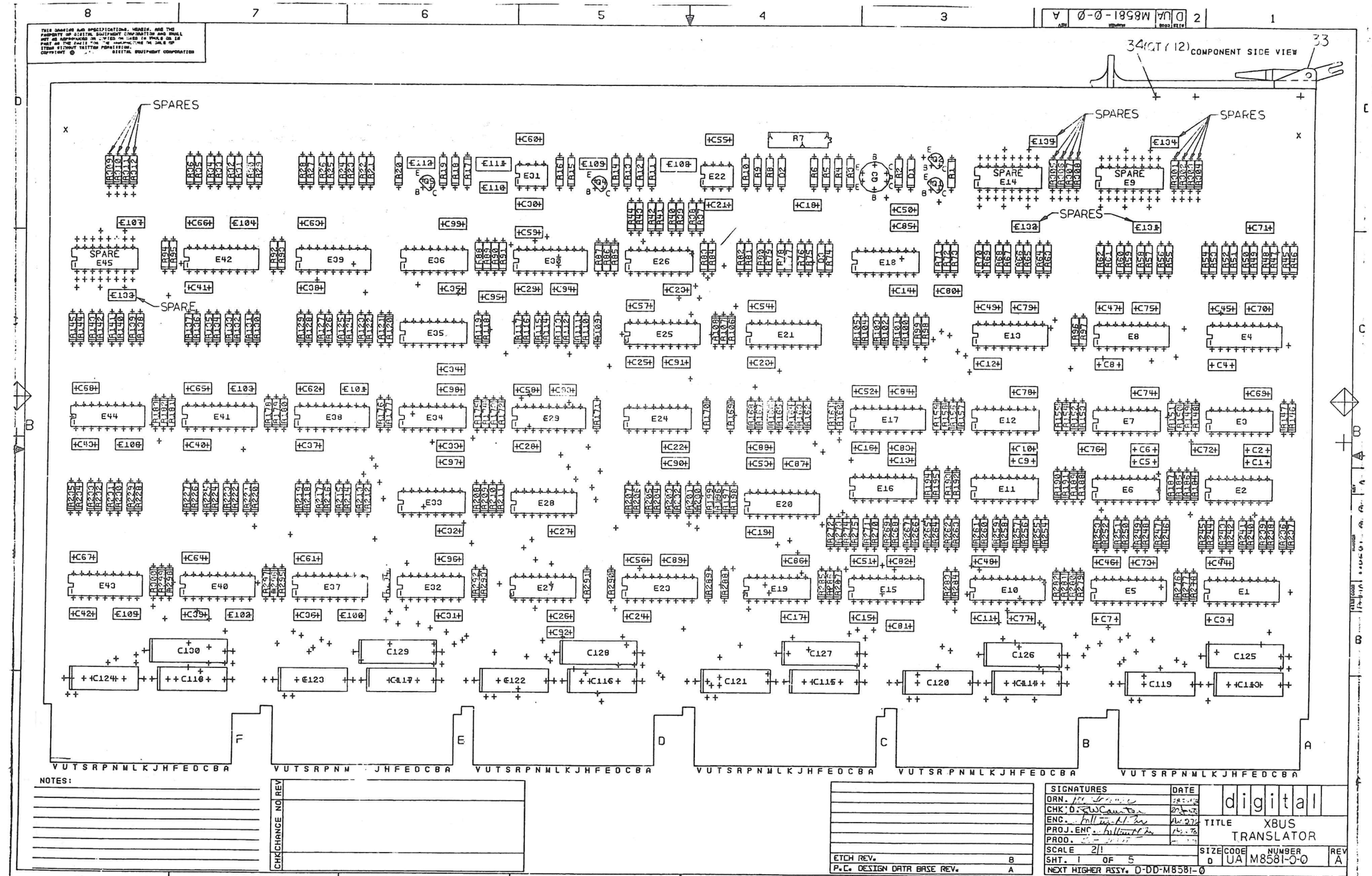
34(QT/12) COMPONENT SIDE VIEW
33
SPARES
SPARE
SPARES
SPARES
SPARES
SPARE
SPARE
SPARE

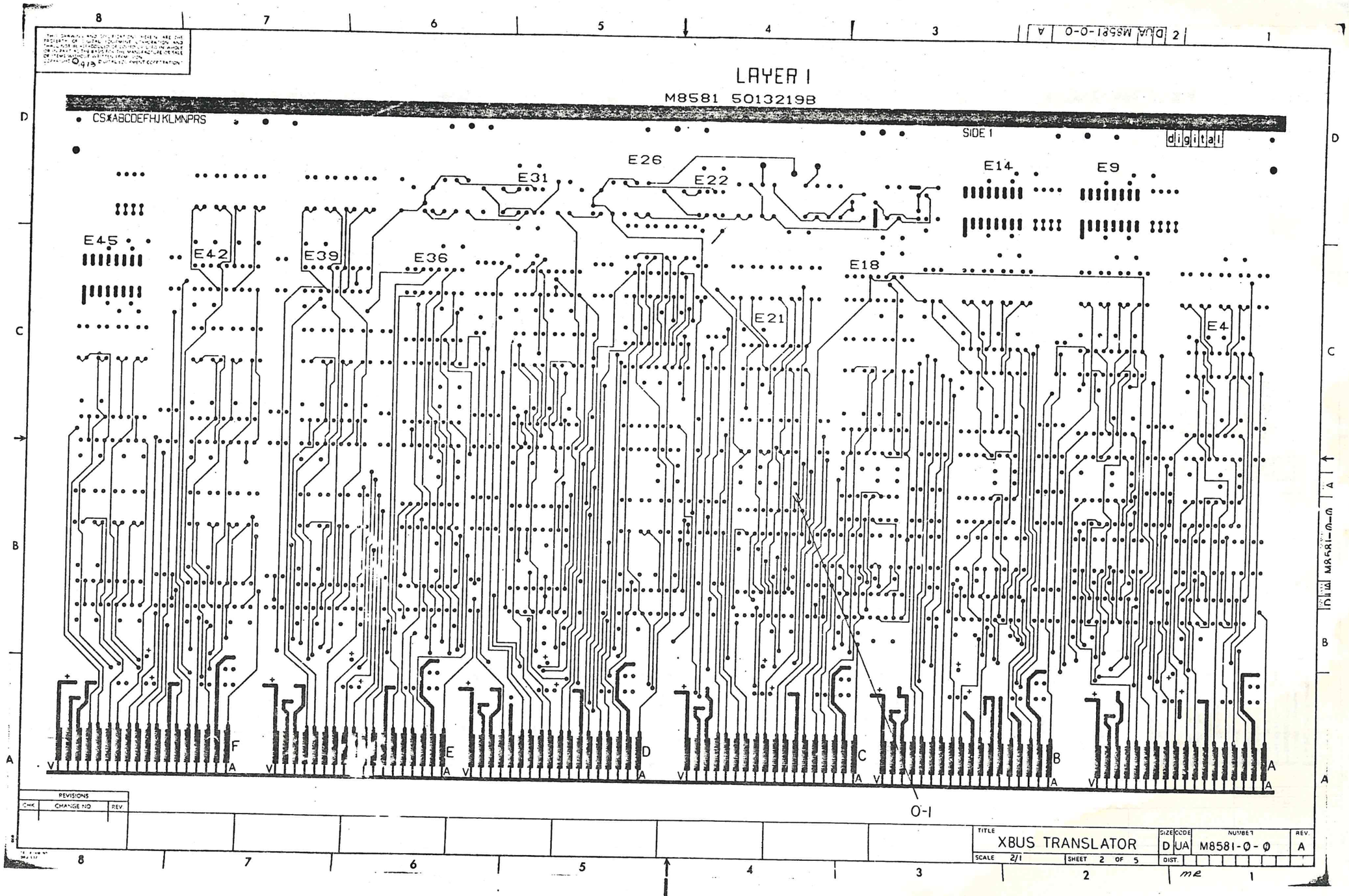
LAYER 1
M8581 5013219B
CS*ABCDEFHJKLMNPRS
SIDE 1
digital
E26
E31
E22
E14
E9
E45
E42
E39
E36
E18
E21
E4
F
E
D
C
B
A
V
0-1
REVISIONS
CHK
CHANGE NO
REV
TITLE
XBUS TRANSLATOR
SIZE
CODE
NUMBER
REV.
D
UA
M8581-0-0
A
SCALE 2/1
SHEET 2 OF 5
DIST.
me

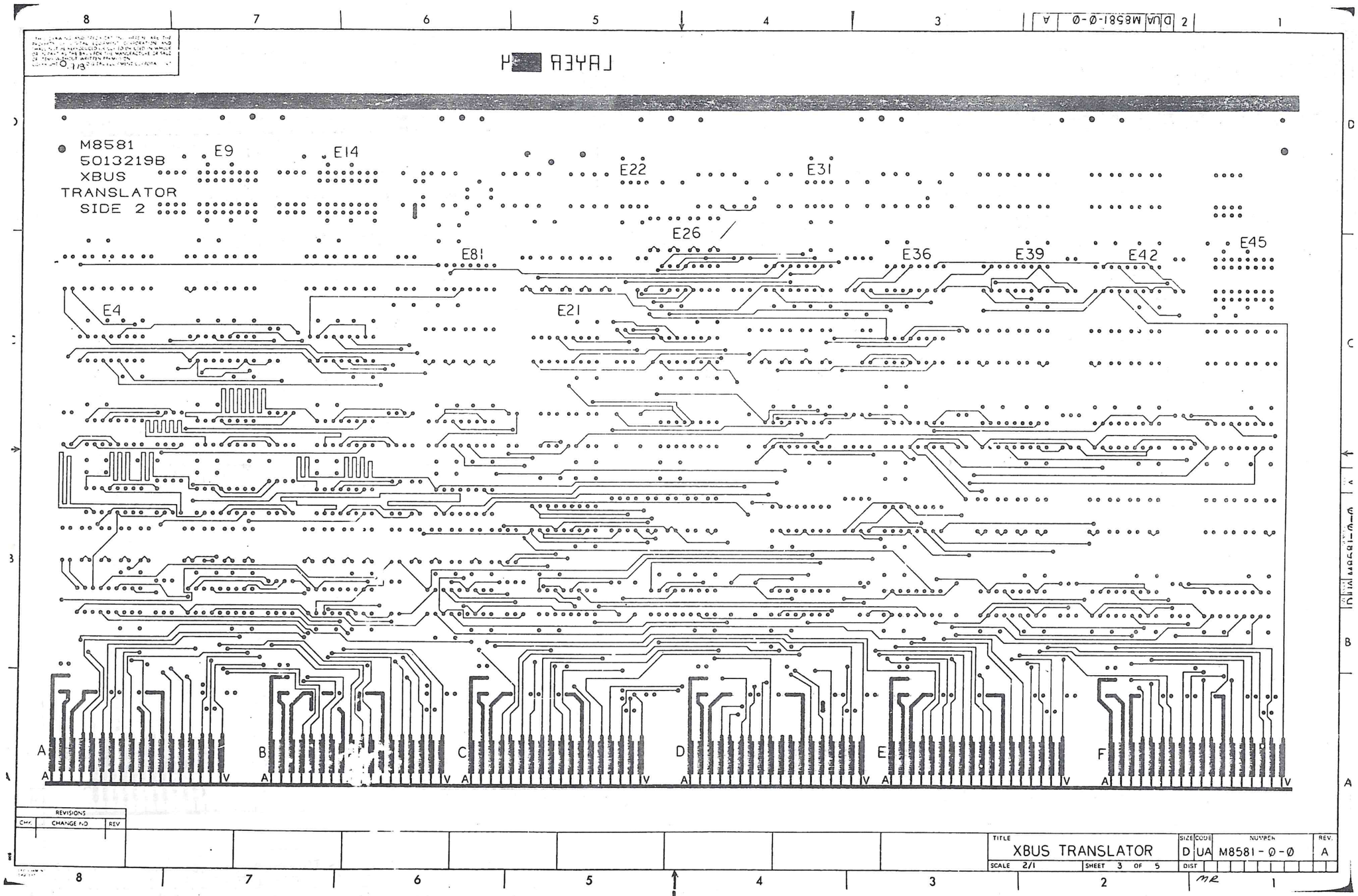
M8581
5013219B
XBUS
TRANSLATOR
SIDE 2
E9
E14
E22
E31
E26
E81
E36
E39
E42
E45
E4
E21
A
B
C
D
E
F
REVISIONS
CHK
CHANGE NO
REV
TITLE
XBUS TRANSLATOR
SIZE
D
CODE
UA
NUMBER
M8581 - Ø - Ø
REV.
A
SCALE 2/1
SHEET 3 OF 5
DIST
MR

~~[illegible]~~
~~[illegible] TO BE TAPED TOGETHER AS SHOWN.~~
2. BEFORE ASSY OF ITEM #4 (BOARD) REWORK PER D-UA 5410280-0-0
3. FOR ASSY AID, REFER TO -PROCESS SHEET A-SP-KLIØ-SPS.

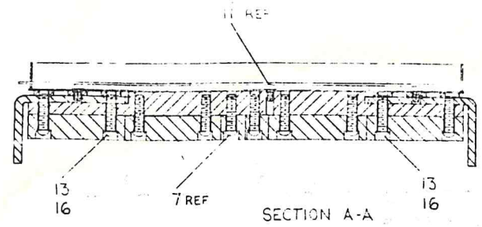

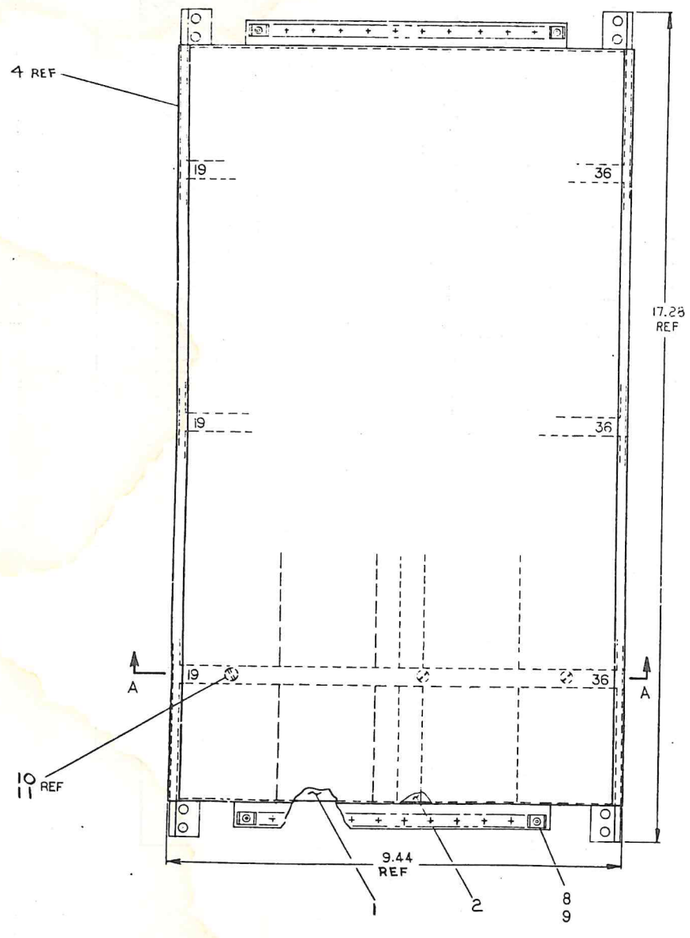

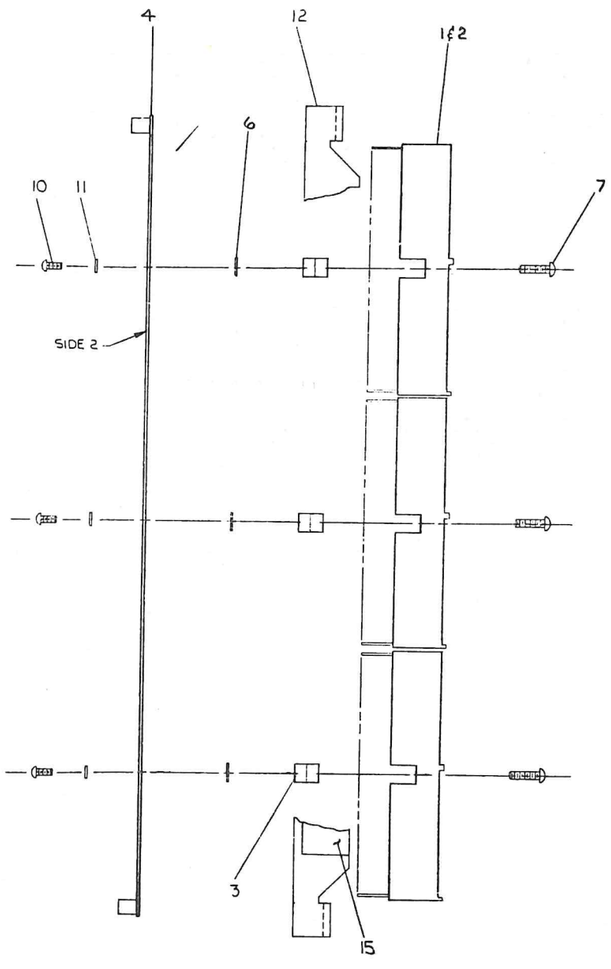

QTY.	DESCRIPTION	PART NO.	ITEM NO.
12	WASHER, LOCK #8	9006690	16
1	LABEL, ADHESIVE BACK	9009255	15
~~1/8~~	~~TAPE, TRANSPARENT .38 W~~	~~9009047~~	~~14~~
12	SCR, PHL FIL HD #3-32x.31	9009664-6	13
2	BRACKET LOGIC FRAME	D-IA-7412900-0-0	12
9	WASHER, LOCK INT TOOTH #6	9006633	11
9	SCR, SLOTTED BIND HD #4-32x.31	9006021-4	10
24	FASTON TAB	9007113	9
24	EYELET	9005000-00	8
30	SCR, PHL HD, POZI DRIVE 3-32x.62	9006120-6	7
3	SPACER, BACK PLANE	C-MD-7411399-3-0	6
~~3~~	~~PAD, BACK PLANE PROTECTION SMT~~	~~C-IN-5-041350-5-0~~	~~5~~
1	ETCH CIRCUIT BOARD	5010659	4
3	BAR, BACK PLANE (CPU)	CMD-7411943-0-0	3
6	CONN BLOCK, 72 PIN	D-PS-1211425-0-0	2
12	288 PIN CONN BLOCK (H883)	E-SC-1210358-01	1

PARTS LIST

BUILDING AD 7009415-0-0 C

FAST USED ON OPTION/MODEL: KLIØ

UNLESS OTHERWISE SPECIFIED
DIMENSION IN INCHES
TOLERANCES
DECIMALS ± .005 FRACTIONS ± 1/64 ANGLES ± 0°30'
FINAL SURFACE QUALITY ✓
REMOVE BURRS AND BREAK SHARP CORNERS

MATERIAL: SEE PARTS LIST

FINISH

DRAWN [illegible] DATE 10/6/77
CHECK [illegible] DATE 10-7-77
ENG [illegible] DATE 10-13-77
PROJ. ENGR. [illegible] DATE 10-17-77
PROD. [illegible] DATE 10-17-77

NEXT HIGHER ASSY: E-AD-7009438-0-0

SCALE 1/1
SHEET 1 OF 1

digital EQUIPMENT CORPORATION
MAYNARD, MASSACHUSETTS

TITLE: CPU 2 BACK PLANE ASSY

SIZE E | CODE AD | NUMBER 7009415-0-0 | REV. C
DIST.

REV	CHANGE NO.	DATE	BY
A	7009415-00001	10-26-77	J. HOVIDENT
B	KLIØ 00017	11 MAR 77	
C	KLIØ-PM-MR0061	2 Dec 77	
D		10 Feb 78	D. CHIN

TRANSFER

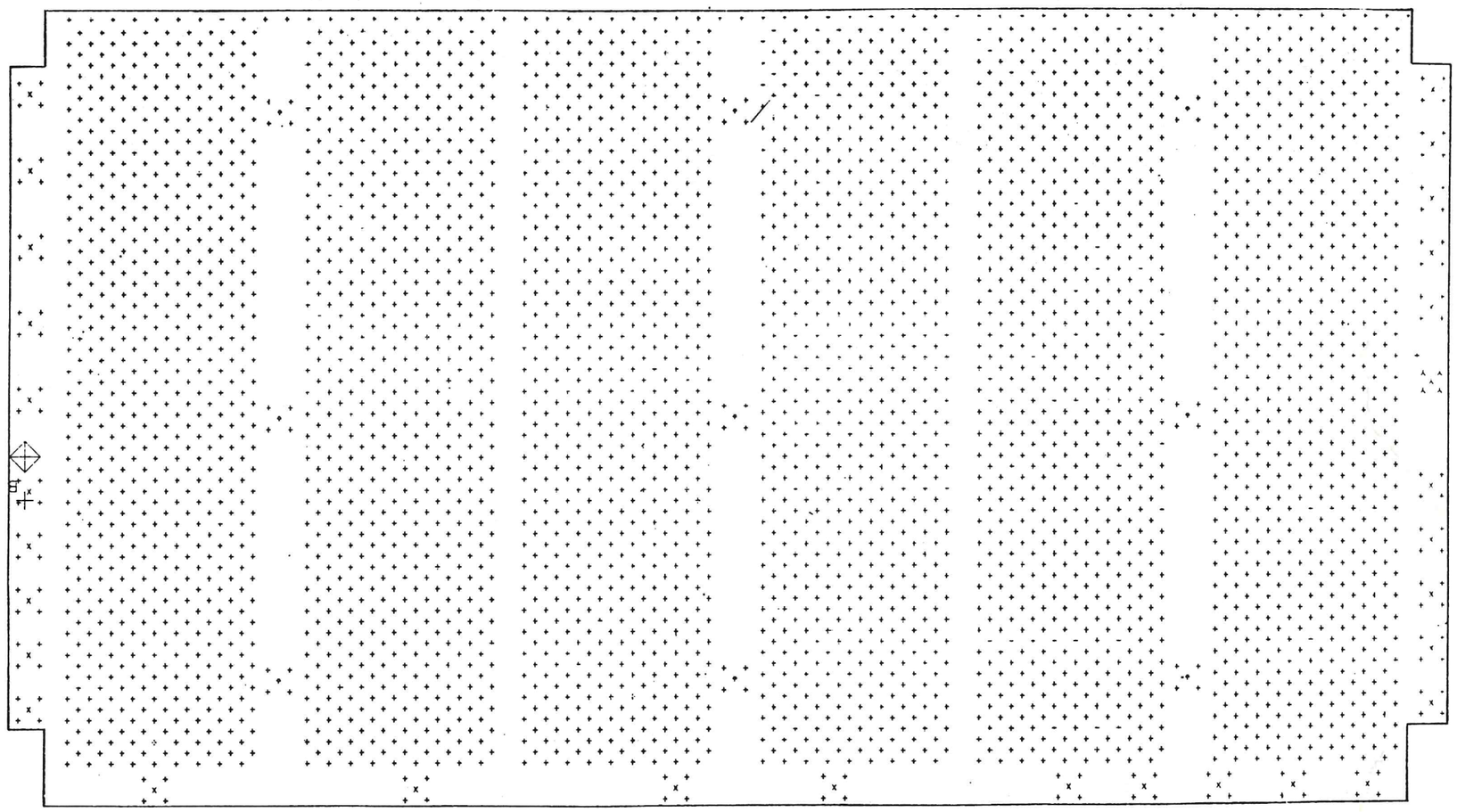

REVISIONS		
CHG	CHANGE NO.	REV

TITLE KL10 BACKPLANE CPU #1	SIZE CODE E	NUMBER UA5410839-0-0	REV. C
SCALE 2/1	SHEET 5 OF 3	DIST.	

MR

REVISIONS		
CHK	CHANGE NO	REV

TITLE	SIZE	CODE	NUMBER	REV.
KL10 BACKPLANE CPU #1	E	UA	5410839-0-0	C

REV-NOTE		
CHG	CHANGE NO	REV

TITLE KLIØ BACKPLANE CPU #1

SCALE 2/1 SHEET 3 OF 5

SIZE/CODE E UA

NUMBER 5410839-0-0

REV C

DIST.

digital
TITLE
CPU
SIZE
E
NUMBER
DATE
SIGNATURES
DRN. M. MASCARELLI
CHK'D. R. RHEAULT
ENG. D. LITWINKIT
PROJ. ENG. D. LITWINKIT
PROD. W. EMBY
SCALE
SHT. OF
NEXT HIGHER ASSY.
ETCH REV.
P.C. DESIGN DATA BASE REV.
CHK CHANGE NO. REV
NOTES:

"THIS DRAWING AND SPECIFICATIONS, HEREIN, ARE THE PROPERTY OF DIGITAL EQUIPMENT CORPORATION AND SHALL NOT BE REPRODUCED OR COPIED OR USED IN WHOLE OR IN PART AS THE BASIS FOR THE MANUFACTURE OR SALE OF ITEMS WITHOUT WRITTEN PERMISSION
COPYRIGHT © 1978 DIGITAL EQUIPMENT CORPORATION"

NOTES:
1. FOR DRAWING DIRECTORY, REFER TO: B-DD-5410839-0
2. CAUTION SHEETS 2 THRU 5 ARE "E" SIZE

QTY	REF. DESIGNATION	DESCRIPTION	PART NO.	ITEM NO.
1		ETCHED CIRCUIT BOARD	5010838	1
30		TAB DOUBLE	9007113	2
30		EYELET	9006732	3

PARTS LIST

FIRST USED ON OPTION MODEL: KLIØ

ETCH BOARD REV

IC TYPE	GND	+5V
GND AND 5V ARE USUALLY PIN 7 AND 14 RESPECTIVELY EXCEPTIONS ARE STATED ABOVE		

IC PIN LOCATIONS

DEC NO.	EIA NO.	DEC NO.	EIA NO.

SEMICONDUCTOR CONVERSION CHART

DRN.	V. PASCARELLI	DATE 16SEP76
CHKD.	L. DEFAULT	DATE 23FEB77
ENG.	D. LITWINETZ	DATE 23FEB77
PROJ. ENG.	D. LITWINETZ	DATE 23FEB77
PROD.	W. EWBY	DATE 24FEB77

NEXT HIGHER ASSY: B-DD-5410839-0

SCALE —/—

SHEET 1 OF 5

digital

TITLE: KLIØ BACKPLANE CPU #1

SIZE D | CODE UA | NUMBER 5410839-0-0 | REV. C

D.S.T.

REVISIONS: REV. | CHANGE NO. | CLRK

D. LITWINETZ 1/1/77

5410839-MH2003 C

OHIO

DWG. 5410839-0-0 REV. C

DO NOT SCALE DRAWING

LEGEND	
NUMBER	VARIATION
7009417-0	MODEL "A" CPU
7009417-01	MODEL "B" CPU

NOTES:

1. ~~CUT TRIMS 16, 17 & 18 TO LENGTH GIVEN IN DETAIL A. GROUND PLANE PROTECTION SHEETS SHOULD BE TAPED TOGETHER AS~~ SHOWN WITH ITEM #14 (2PLACES)
2. FOR ASSY AID REFER TO PROCESS SHEET A-SP-KL10-SPS
3. BEFORE ASSY OF ITEM #4 (BOARD) REWORK PER D-UA-5410839-0-0
4. AFTER PASSING THRU SOLDER WAVE SOLDER WIRE WRAP POST (ITEM #19) TO BOARD (ITEM #4)

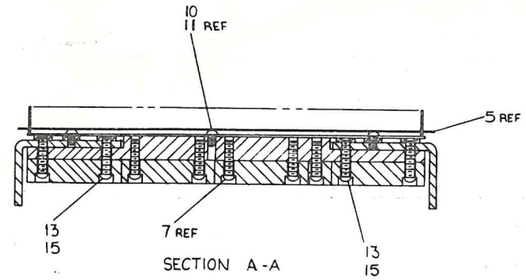

SECTION A-A

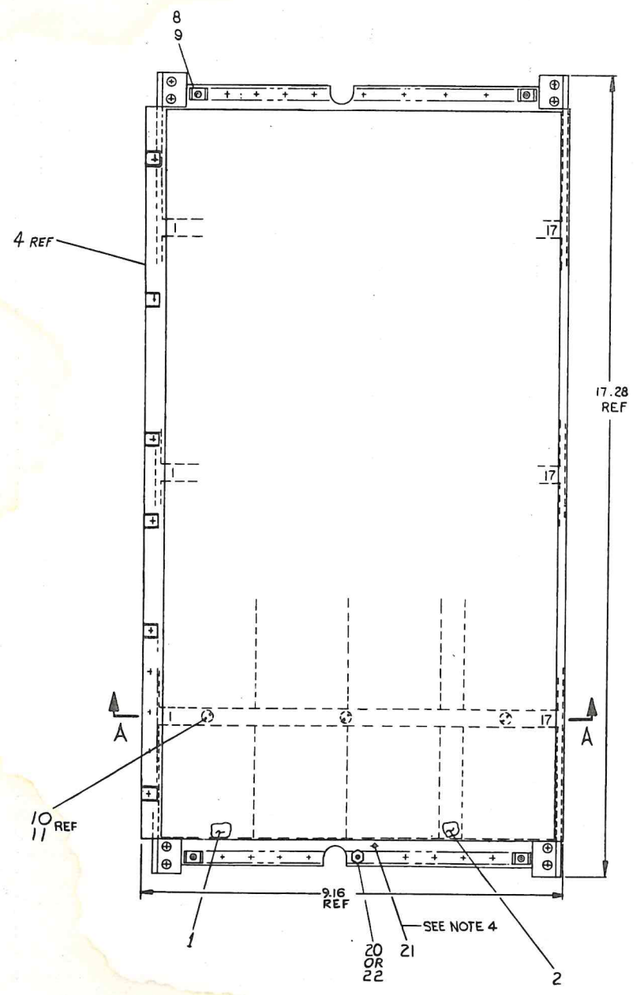

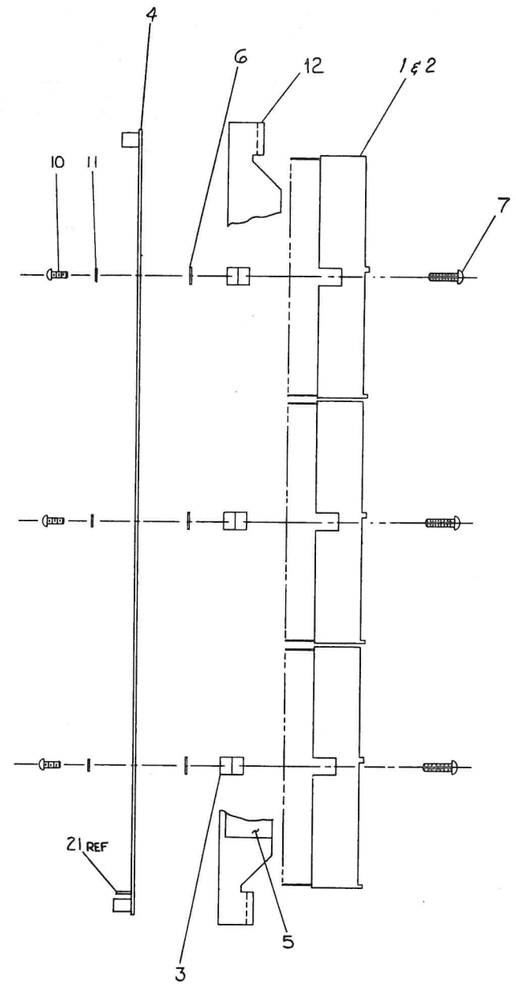

7009417-01	7009417-00				
1	—	CONN SMA, STRAIGHT	12-14225	22	
1	1	POST, WIRE WRAP	9009149	21	
—	1	CONN, COAX	1212351	20	
		~~WIRE WRAP POST~~	~~1210305-1~~	~~19~~	
		~~GND PLANE PROTECTION SHT~~	~~D-UA-5411783-0-0~~	~~18~~	
		~~GND PLANE PROTECTION SHT~~	~~D-UA-5411784-0-0~~	~~17~~	
		~~GND PLANE PROTECTION SHT~~	~~D-UA-5411785-0-0~~	~~16~~	
	12	WASHER, LOCK #8	9006690	15	
	AR	~~TAPE, TRANSPARENT .25W~~	~~9009647~~	~~14~~	
12	12	SCR, PHL FIL HD #8-32×.81	9009664-6	13	
2	2	BRACKET, LOGIC FRAME	D-IA-7412900-0-0	12	
9	9	WASHER, LOCK INT TOOTH #6	9006633	11	
9	9	SCR, SLOTTED BD HD #6-32×.31	9006021-4	10	
29	29	FASTON TAB	9007113	9	
29	29	EYELET	9009000-00	8	
27	27	SCR, FIL HD POZI DRIVE #8-32×.62	9006120-6	7	
3	3	SPACER, BACK PLANE	C-HD-7411399-2-0	6	
1	1	LABEL, ADHESIVE BACK	9009255	5	
1	1	ETCH CIRCUIT BOARD	5010838	4	
3	3	BAR, BACK PLANE	C-HD-7411944-0-0	3	
3	3	72 PIN CONN, BLOCK	D-PS-1211425-0-0	2	
12	12	288 PIN CONN BLOCK (H863)	E-SC-1210256-01	1	
	QTY.	DESCRIPTION	PART NO.	ITEM NO.	

PARTS LIST

TOLERANCES DECIMALS
.XXX = ± .005
.XX = ± .02
.X = ± .1

FIRST USED ON CPT/MOD. KL10

UNLESS OTHERWISE SPECIFIED DIMENSIONS ARE IN INCHES
TOLERANCES
FINISH
MATERIAL
SEE PARTS LIST

DWN F. Lo DATE 1-6-73
CHK'D DATE
ENGR DATE 1-12-73
MFG Florida DATE 1-17-73
QUALITY Tom Lewis DATE 2-7-73
PROJ. ENGINEER Martin DATE 2-7-73
PROJECT ASSY E-AD-7009438-0-0
SCALE 1/1
SHEET 1 OF 1

EQUIPMENT CORPORATION
TITLE CPU #1
BACK PLANE ASSY
CODE IDENT NO. 12345
SIZE E
DWG NO. AD 7009417-0-0
REV D
DIST.

REVISIONS			
CHK	CHANGE NO.	REV.	
	7009417-00001	A	
	J. PROVIDENT		
	RLB-00017	B	
	7009417-00032	C	
	H. HACKENBERG		
	KL10-PW-M8005	D	
	D. CHIN		

A B C D E F H J

8 7 6 5 4 3 2 1

NOTES:
1. INSTALL ITEMS 4, 34 & 35 IN REAR HOLES #19 & #32
2. ATTACH DECAL (ITEM 40) TO OUTSIDE OF REAR DOOR.
3. PACKAGE PER ITEM 41.

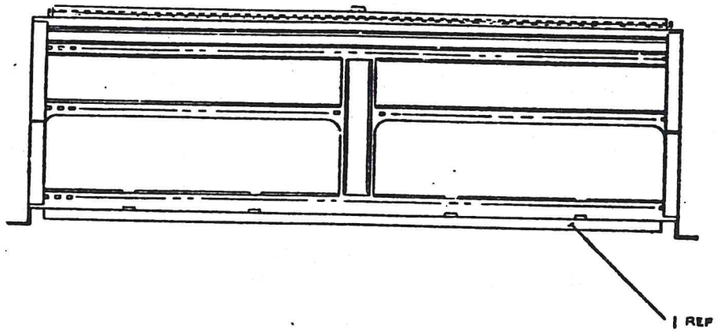

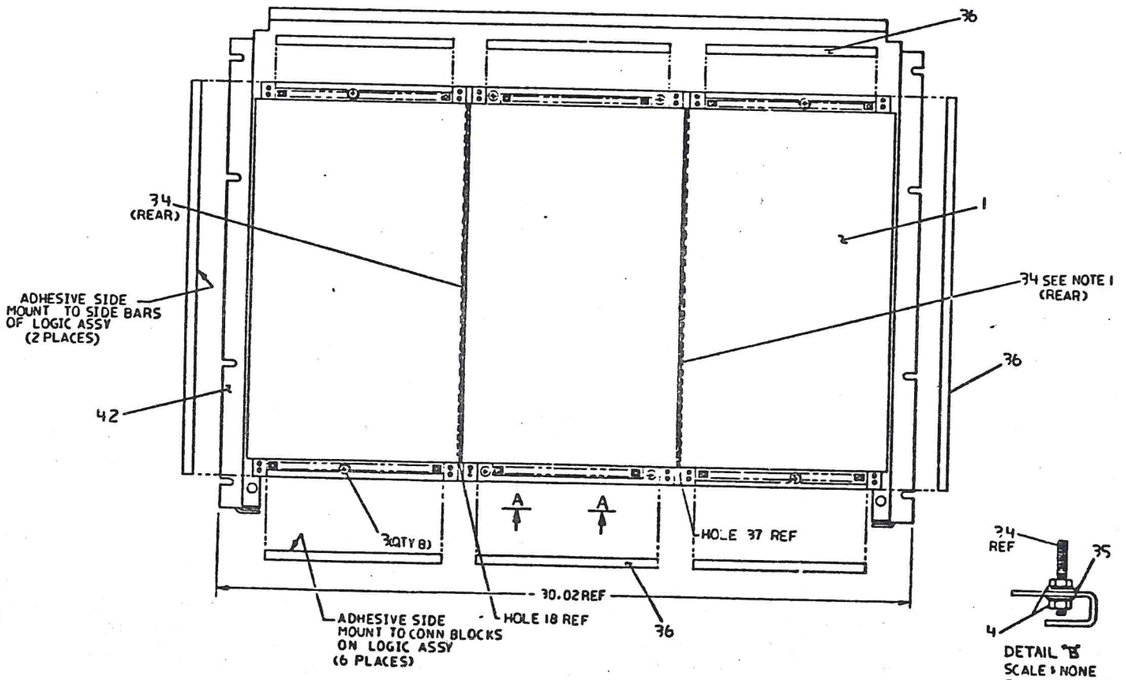

DETAIL "B"
SCALE = NONE
(TYP 4 PLACES)

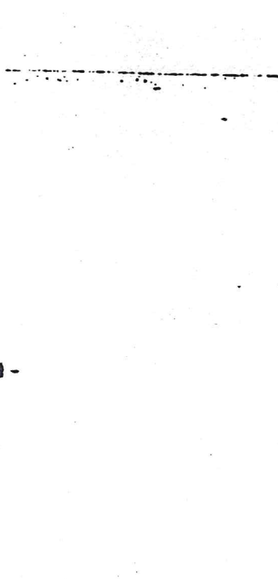

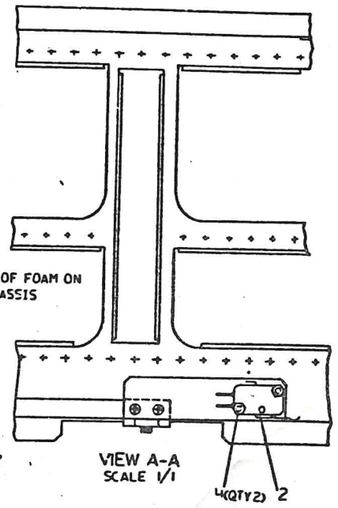

VIEW A-A
SCALE 1/1

CAUTION:
OFF SHEET PARTS LIST EXISTS
SEE: K-PL-KL10-PW-CBR

TITLE	KL10-PW CPU LOGIC ASSY
SIZE	B
CODE IDENT NO	04000
DWG NO	LA-KL10-PW-0
REV	A
SCALE	1/2
SHEET	1 OF 1

RELEASED TO A

AUTOMATED BY PRTLST.5R(55)

PARTS LIST

LINE	ITEM	TGP DOCUMENT	PART NUMBER	MIN REV	DESCRIPTION	QTY PER VARIATION PW
					VARIATION REVISION LEVEL:	A1
31	31	D-UA-M8548-0-0	M8548-00	A	TIME MODULE	5
32	32	D-MU-KL10-PW-CPU			KL10-PW-MODULE UTILIZATION	REF
33	33		9009255-00		LABEL, POWER SUPPLY, 2-15/16 " L	1
34	34	B-MD-7413992-0-0	7413992-00		ROD SUPPORT 4-40 UNF	2
35	35		9006655-00		WASHER,FLAT SST	8
36	36		9008274-00		FOAM, TAPE 3/8" X 3/8" BLACK	A/R
37	37	SEE NOTE 1	M852 -00	A	LARGER CACHE ADDRESS	REF
38	38	SEE NOTE 1	M853 -00	A	LARGER CACHE EXTENSION	REF
39	39	SEE NOTE 1	M856 -00	A	IR,D RAM & CARRY,LARGER CACHE	REF
40	40	A-CD-7412561-0-0	7412561-00		DECAL MG10	1
41	41	A-SP-3700258-0-0	3700258-00		INSTR PKG MA20-AC	1
42	42	E-IA-7009859-1-0	7009859-01		COOLING ASSY,FULL DOOR	1

43 NOTE: 1 PART OF THE MCA25-AA

DIGITAL	TITLE KL10-PW CPU LOGIC ASSY	SECTION A OF A	SIZE K	CODE PL	DOCUMENT NUMBER KL10-PW-DBP	REV A

MRO

AUTOMATED BY PRTLST.5R(55)

P A R T S L I S T

LINE	ITEM	TOP DOCUMENT	PART NUMBER	MIN REV	DESCRIPTION	QTY PER VARIATION PW A1
					VARIATION REVISION LEVEL:	
1	1	K-PL-7021449-0-DBP	7021449-01	A	KL10-PV-TO-KL10-PW WIRED ASSY.	1
2	2		1210775-00		SW,ROT 1P 8POS	1
3	3		9006075-01		SCREW,MACH PAN PHIL 10-	8
4	4		9006557-00		NUT,HEX EXT TOOTH LCKWSHR 4-40	10
5	5	D-UA-M8512-0-0	M8512-00	B	DATA PATH BOARD KL10	6
6	6	D-UA-M8513-YA-0	M8513-YA	B	MODULE CACHE CONTROL	1
7	7	D-UA-M8516-0-0	M8516-00	D	FCL/TTL TRANSLATOR KL10	3
8	8	D-UA-M8517-0-0	M8517-00	B	MEMORY BUFFER KL10	3
9	9	SEE NOTE 1	M854 -00	A	PHYSICAL MEMORY,MODULE FOR LARGE	REF
10	10	D-UA-M8519-0-0	M8519-00	C	INTERNAL MEM BUS TRANSLATOR	2
11	11	SEE NOTE 1	M855 -00	A	2-WAY ASC PAGE TABLE ADDING MBOX	REF
12	12	D-UA-M8522-0-0	M8522-00	A	TR D RAM AND CARRY KL10	1
13	13	D-UA-M8524-0-0	M8524-00	D	SCAD PC13-17 PC FLAGS	1
14	14	D-UA-M8525-0-0	M8525-00	H	APR CONTROL REGISTER	1
15	15	D-UA-M8526-0-0	M8526-YA	B	M8526 FOR KL10-PV	1
16	16	D-UA-M8529-YA-0	M8529-YA	A	TIME MODULE	1
17	17	SSE NOTE 1	M857 -00	A	M-BOX CONTROL FOR LARGER CACHE	REF
18	18	D-UA-M8532-YA-0	M8532-YA	A	M8532 FOR USE WITH MIA20 + CI20	1
19	19	D-UA-M8533-0-0	M8533-00	C	CHANNEL CONTROL	1
20	20	D-UA-M8534-0-0	M8534-00	C	CHANNEL CONTROL WORD	1
21	21	D-UA-M8535-0-0	M8535-00	D	CHANNEL RAM CTRL 4	1
22	22	D-UA-M8536-0-0	M8536-00	E	CHANNEL CTR LOGIC	1
23	23	D-UA-M8537-0-0	M8537-00	D	M BOX CTRL 4	1
24	24	D-UA-M8538-0-0	M8538-00	C	METER (70-9418) KL10	1
25	25	D-UA-M8540-0-0	M8540-00	A	MODULE SHIFT MATRIX	1
26	26	D-UA-M8541-0-0	M8541-00	A	CONTROL RAW ADDRESS	1
27	27	D-UA-M8542-0-0	M8542-00	A	VMA BOARD	1
28	28	D-UA-M8543-0-0	M8543-00	A	E BOX CONTROL	1
29	29	D-UA-M8544-0-0	M8544-00	A	MEMORY CONTROL	1
30	30	D-UA-M8545-0-0	M8545-00	A	APR BOARD	1

REVISION HISTORY			BASIC PART NO: KL10			
ENG	ECO NUMBER	REV	SECTION A OF A	DRN: G.ALSTON	DATE: 29-JUN-84	D I G I T A L
	INITIAL	A	SECTION.VARIATION INDEX	CHK'D: G.ALSTON	DATE: 29-JUN-84	TITLE PARTS LIST KL10-PW CPU LOGIC ASSY
			[A]PW			
			[B]	DES.ENG: C.A.JENS	DATE: 29-JUN-84	DOCUMENT NUMBER
			[C]			SIZE CODE NUMBER REV
				RESP.ENG.: C.A.JENS	DATE: 29-JUN-84	K PL KL10-PW-DBP A
			[D]			
			[E]	MFG.ENG.: M MEHR	DATE: 29-JUN-84	RELEASE DATE: 01-AUG-84
			[F]	ASSEMBLY NUMBER: E-UA-KL10-PW-0	TOP DOCUMENT NUMBER: B-DD-KL10-PW-0	FILE NAME: Z9011A.PLS / EDIT # 16

"THIS DRAWING AND THE SPECIFICATIONS CONTAINED HEREIN ARE CONFIDENTIAL AND PROPRIETARY. THEY ARE THE PROPERTY OF DIGITAL EQUIPMENT CORPORATION AND SHALL NOT BE REPRODUCED OR COPIED OR USED IN WHOLE OR IN PART AS THE BASIS FOR THE MANUFACTURE OR SALE OF ITEMS WITHOUT WRITTEN PERMISSION. THIS IS AN UNPUBLISHED WORK PROTECTED UNDER THE FEDERAL COPYRIGHT LAWS."

MRO

TITLE DMA20 SETUP PROCEDURE

e. Adjust each memory such that DATA WARNING (on channel 1) occurs 260 NS prior to RD RS (on channel 2).

f. Modify program to set up the next four memories.

This drawing and specifications, herein, are the property of Digital Equipment Corporation and shall not be reproduced or copied or used in whole or in part as the basis for the manufacture or sale of items without written permission.

DIGITAL EQUIPMENT CORPORATION
MAYNARD, MASSACHUSETTS

ENGINEERING SPECIFICATION

DATE 24 MAR 77

TITLE DMA 20 SETUP PROCEDURE

REVISIONS

REV	DESCRIPTION	CHG NO	ORIG	DATE	APPD BY	DATE

ENG	APPD	SIZE	CODE	NUMBER	REV
		A	SP	KL10-PV-6	

DEC FORM NO EN-(327)-1071-N071
DRA 107

ENGINEERING SPECIFICATION CONTINUATION SHEET

TITLE DMA20 SETUP PROCEDURE

This document specifies DMA20 Deskew procedure and setup for Data Warning Adjustment.

1.0 Adjustment procedure for deskewing the DMA20 clocks.

NOTES:
i. Use identical probes with short ground clips.
ii. This procedure must be performed when any of the following modules are changed:
M8526 or M8526-YA, M8519, SBUS Cables, M8563, M8560.

a. Attach a probe (either channel 3 or external sync) to "A CHANGE COMING L" 4E22F2. Set the sync for a negative edge.

b. Attach channel 1 probe to 4D33P1 (MTR CLCCK) Use .5V/cm and set scope such that the ground reference is 1.3V above the centerline.

c. Attach channel 2 to 1A02R2 (DMC2 CLK DESKEW POINT) Use .5V/cm and adjust scope such that the ground reference is 1.5V below the center line.

d. The Mbox clock which occurs after "A CHANGE COMING L" goes low is the "A" phase clock. The second clock tic after the "A" phase clock tic is the "B" phase clock tic. The second clock tic after the "B" phase clock tic is another "A" phase clock tic, etc.

SIZE	CODE	NUMBER	REV
A	SP	KL10-PV-6	

DEC FORM NO EN-01022-16-N370-(381)
DRA 108

ENGINEERING SPECIFICATION CONTINUATION SHEET

TITLE DMA20 SETUP PROCEDURE

e. Adjust DL2 on the M8560 in slot 1AF03 (it is the 4th delay from the top) until the clock on channel 2 which is affected by this adjustment crosses the centerline at the same time as the "A" phase clock on channel 1.

f. Adjust DL3 on the M8560 in slot 1AF03 (it is the top delay) until the clock which is affected by this adjustment crosses the centerline at the same time as the "B" phase Mbox clock which is on channel 1.

h. Connect channel 2 to 1D03F1 (DTR3 CLK 125 NS A H).

i. Adjust DL1 on the M8560 in slot 1AF03 (it is the bottom delay) until the clock on channel 2 which is affect by this adjustment crosses the centerline at the same time as the "A" phase clock on channel 1.

j. Connect channel 2 to 1D03L2 (DTR3 CLK 62 NS A H).

k. Adjust DL4 in slot 1AF03 (it is the second delay from the top) until the clock on channel 2 which is affected by this delay crosses the centerline at the same time as the "A" phase clock on channel 1.

l. Adjust DL5 in slot 1AF03 (it is the third delay from the top) until the clock on channel 2 which is affected by this delay crosses the centerline at the same time as the "B" phase clock on channel 1.

m. You have now completed the adjustments for clock deskew on the DMA20.

SIZE	CODE	NUMBER	REV
A	SP	KL10-PV-6	

DEC FORM NO DEC 16-(381)-1022-N370
DRA 108

ENGINEERING SPECIFICATION CONTINUATION SHEET

TITLE DMA20 SETUP PROCEDURE

2.0 Adjustment procedure for setting up DATA WARNING when used with the DMA20.

****

NOTES: 1. Use identical probes with short ground clips. This procedure uses 4-BUS mode, assuming the system has multiples of 4 memories. This general procedure will work in any bus mode.

2. The memory must be setup to return DATA WARNING SLOW and ADDRESS ACK (NT) only. No other combination is legal!!

****

a. Set-up the DMA20 4-BUS mode doing a small loop which reads from only one memory on a given bus such as:

```
10/MOVE 0, 100   (200000 100)
11/MOVE 0, 101   (200000 101)
12/MOVE 0, 102   (200000 102)
13/MOVE 0, 103   (200000 103)
14/JRST 10       (254000 10)
```

b. Put channel 1 on KBUS"X" DATA WARNING.

```
KBUS0 1C05D1
KBUS1   1C07D1
KBUS2   1C09D1
KBUS3   1C11D1
```

c. Put channel 2 on KBUS"X" RD RS.

```
KBUS0   1C05J1
KBUS1   1C07J1
KBUS2   1C09J1
KBUS3   1C11J1
```

d. Sync on channel 1 going negative.

SIZE	CODE	NUMBER	REV
A	SP	KL10-PV-6	

DEC FORM NO DEC 16-(381)-1022-N370
DRA 108

"THIS DRAWING AND SPECIFICATIONS, HEREIN, ARE THE PROPERTY OF DIGITAL EQUIPMENT CORPORATION AND SHALL NOT BE REPRODUCED OR COPIED OR USED IN WHOLE OR IN PART AS THE BASIS FOR THE MANUFACTURE OR SALE OF ITEMS WITHOUT WRITTEN PERMISSION. COPYRIGHT © 1977, DIGITAL EQUIPMENT CORPORATION"

UNIT	MODULE REPLACED	UNIT(S) REQUIRING DESKEW	UNIT TO BE DESKEWED	REFERENCE DOCUMENTATION
KLIØ-PV CPU	M8516	ALL RH2Ø UNITS	DMA2Ø	A-SP-KLIØ-PV-6
	M8519	ALL DMA2Ø, MA2Ø/MB2Ø	MA2Ø, MB2Ø	D-BS-MB2Ø-Ø-INS
	M8526-YA	DMA2Ø, MA2Ø/MB2Ø, ALL RH2Ø UNITS	RH2Ø	A-SP-RH2Ø-Ø-SP
CABLES	SBUS - BC2ØC	THE DMA2Ø OR MA/MB2Ø CONNECTED TO THAT SBUS	ALL OF THE ABOVE	EK-2ØXX-IN-ØØ1
	E & C BUS - BC11 OR BC2ØC	ALL RH2Ø UNITS		
MA2Ø	M8561 OR M8562	THE MA2Ø IN WHICH THE MODULE WAS REPLACED		
MB2Ø	M8565 OR M8568	THE MB2ØIN WHICH THE MODULE WAS REPLACED		
DMA2Ø	M8569 OR M8563	DMA2Ø		
RH2Ø	M8556	THE RH2Ø IN WHICH THE MODULE WAS REPLACED		
	M8559	ALL RH2Ø UNITS		

DESCRIPTION	DWG./PART NO.	ITEM NO.

UNLESS OTHERWISE SPECIFIED DIMENSIONS ARE IN INCHES

ANGLES ±0° 30'	CLASS OF ACCURACY (CHECK ONE)	NOMINAL DIMENSION RANGE INCHES: OVER 0 TO 0.2	OVER 0.2 TO 1.2	OVER 1.2 TO 4.0	OVER 4.0 TO 12.0	OVER 12.0 TO 40.0	OVER 40.0 TO 80.0
SURFACE QUALITY IN MICROINCHES	MEDIUM ☐	±.004	±.008	±.012	±.016	±.024	±.04
	PREFERRED ☐	±.012	±.016	±.025	±.04	±.063	±0.1

QUANTITY & VARIATION

THIRD ANGLE PROJECTION

REMOVE BURRS AND BREAK SHARP CORNERS

DO NOT SCALE DWG

MATERIAL —#—

FINISH —#—

DRN.		13 APR 77
CHK'D		12 APR 77
ENG.	John D Allen	12 APR '77
PROD. ENG.	John D Allen	12 APR '77
PROD.		12 APR 77

NEXT HIGHER ASSY. B-DD-KLIØ-PV

SCALE —#—

SHEET 1 OF 1

FIRST USED ON KLIØ-PV

digital

TITLE

KLIØ DESKEW INFORMATION

SIZE	CODE	NUMBER	REV.
C	SP	KLIØ-PV-7	

DIST.

REVISIONS		
CHK	CHANGE NO.	REV.

MASTERPACE P-1689

DEC FORM NO. F02-1692

THIS DRAWING AND THE INFORMATIONS CONTAINED HEREIN ARE CONFIDENTIAL AND PROPRIETARY. THEY ARE THE PROPERTY OF DIGITAL EQUIPMENT CORPORATION AND SHALL NOT BE REPRODUCED OR COPIED OR USED IN WHOLE OR IN PART AS THE BASIS FOR MANUFACTURE OR SALE OF ITEMS WITHOUT WRITTEN PERMISSION. THIS IS AN UNPUBLISHED WORK PROTECTED UNDER THE FEDERAL COPYRIGHT LAWS.

FOR EACH OPTION OR SERIAL NUMBER WIRE THE SOURCE LISTED ABOVE THE OPTION OR SERIAL NUMBER BIT TO THE SOURCE TO MAKE THE BIT TRUE.

OPTIONS:

SOURCE:	4D44E1
OPTIONS: 50HZ	4E43M2
CACHE AVAIL	4E43A1
CHANNEL AVAIL	4E43E1
EXTENDED ADDRESSING CPU	4D43D2
MASTER OSCILLATOR	4D43E1
MCA25	4E43F2

SERIAL NO'S

SOURCE:	4D42E1
2048	4E41M2
1024	4E41A1
512	4E41E1
256	4D41D2
128	4D41E1
64	4E41F2

SERIAL NO'S

SOURCE:	4D40E1
32	4E39M2
16	4E39A1
8	4E39E1
4	4D39D2
2	4D39E1
1	4E39F2

DESCRIPTION	DRAWING NO	PART NO	LISTING NO

UNLESS OTHERWISE SPECIFIED DIMENSIONS ARE IN INCHES AND THE FOLLOWING TOLERANCES APPLY (PER DEC-STD 114)

INCHES TOLERANCES	ANGLES ± 0°30'	APPLICABLE DIMENSION RANGE (CHECK ONE)	DIMENSION RANGE IN INCHES					
			OVER 0 TO 0.2	OVER 0.2 TO 1.2	OVER 1.2 TO 4.0	OVER 4.0 TO 12.0	OVER 12.0 TO 40.0	OVER 40.0 TO 100.0
X = ± .1	SURFACE QUALITY	☐	± .02	± .03	± .06		± .10	
.XX = ± .02		☐	± .004	± .008	± .012	± .016	± .024	± .04
.XXX = ± .005	MICROINCHES	☐						

QUANTITY & VARIATION

THIRD ANGLE PROJECTION

DO NOT SCALE DRAWING

REMOVE BURRS AND BREAK SHARP CORNERS

MATERIAL —

FINISH —

		DATE
DRN	Lane Alston	6-18-84
CHK'D	Lane Alston	6-29-84
DES ENG		6-29-84
RESP ENG		6-29-84
MFG ENG		29 JUN 84
TOP DOC. NO.	E-DC-KL10-PW	

TITLE digital

OPTION/SERIAL NUMBER CHART

DOCUMENT NUMBER

SIZE	CODE	NUMBER	REV
D	SP	KL10-PW-2	A

SCALE — SHEET 1 OF 1

MR

REVISION HISTORY

REV.	ECO NUMBER	DATE

DRD 1027

This drawing and specifications, herein, are the property of Digital Equipment Co. and shall not be reproduced or copied or used in whole or in part as the basis manufacture or sale of items without written permission.

APR MBOX CTL 03 H	4B34H2	4B40P1	Orange/Violet	Delete TWP
PMA SEL 7 L	4E29T2	4E22K1	White	Add TWP (91-07768-59)
GND	4E29T1	4E22H1	Green	(or closest available GND)
PAG1 PT 26 B H	4F28L1	4B22N1	White	"
GND	4F28H1	4B22N2	Green	
MBC2 NEW 26 H	4F22D1	4F28D2	White	"
GND	4F22D2	4F28C2	Green	
MBC2 NEW 26 H	4F27D2	4E25A1	White	"
GND	4F27C2	4E25C2	Green	
MBC2 NEW 26 H	4E25A1	4E24A1	White	"
GND	4E25A2	4E24A2	Green	
MBC2 NEW 26 H	4E24A1	4E19A1	White	"
GND	4E24A2	4E19A2	Green	
MBC2 NEW 26 H	4E19A1	4E17A1	White	"
GND	4E19A2	4E17A2	Green	
MBC2 NEW 26 H	4E17A1	4C17F2	White	"
GND	4E17A2	4C17D1	Green	
PMA3 PA 26 H	4D30E1	4A22P1	White	"
GND	4D30C2	4A22N2	Green	
APR MBOX CTL 03 H	4B40P1	4B30U2	White	"
GND	4B40N1	4B30T1	Green	
APR MBOX CTL 03 H	4B30U2	4B34H2	White	"
GND	4B30T1	4B34H1	Green	
AR 23 C H	4B30V2	4F43L1	White	"
GND	4B30T2	4F43H1	Green	

REVISIONS			
REV.	DATE	CHG. NO.	APP'D.

DRN.	DATE	
CHK'D.	DATE	
ENG.	DATE	
PROJ. ENG.	DATE	
PROD.	DATE	
FIRST USED ON		
SCALE		
SHEET	OF	

DRN. M. Eichman DATE 27 June 84
CHK'D. C. A. Jones DATE 27-Jun-84
ENG. M. Eichman DATE 27 June 84
PROJ. ENG. C. A. Jones DATE 27-Jun-84
PROD. M.T. Warren DATE 27 JUN 84
FIRST USED ON KL10-PW
SCALE None
SHEET 1 OF 1

digital EQUIPMENT CORPORATION
MAYNARD, MASSACHUSETTS

TITLE
GENERAL WIRING SHEET
FOR KL10-PV-to-KL10-PW Conversion

SIZE	CODE	NUMBER	REV.
A	WL	KL10-PW-1	A

DIST.

DRA 104 DEC 16-(379)-1029-N970

	DRAWING NO.	NO. OF SHTS.	PART NO.	DESCRIPTION	REVISIONS
12	D-IA-7009839-0-0	1		CENTER SUPPORT ASSY	B
	D-MD-7411806-0-0	1		SUPPORT CENTER	A
	B-MD-7411805-0-0	1		HINGE CENTER SUPPORT	A
13	A-SP-3700258-0-0	6		PACKAGING INSTRUCTIONS MA2Ø/MB2Ø	C
14	D-AD-7016755-0-0	1		REAR DOOR ASSY	*
	D-IA-7421948-0-0	1		REAR DOOR	A

NOTES:

REVISIONS	
REV.	
CHG NO.	
DATE	

"THIS DRAWING AND SPECIFICATIONS, HEREIN, ARE THE PROPERTY OF DIGITAL EQUIPMENT CORPORATION AND SHALL NOT BE REPRODUCED OR COPIED OR USED IN WHOLE OR IN PART AS THE BASIS FOR THE MANUFACTURE OR SALE OF ITEMS WITHOUT WRITTEN PERMISSION.

COPYRIGHT© DIGITAL EQUIPMENT CORPORATION

digital

USED ON OPTION/MODEL	
KL1Ø-PW	

DRN.	
CHK'D	
ENG.	
PROD.	

TITLE KL1Ø-PW BASED SYSTEM

SIZE	CODE	NUMBER	REV.
B	DD	KL1Ø-PW	A

SHEET 11 OF 11

DRB 128

MRO

	DRAWING NO.	NO. OF SHTS.	PART NO.	DESCRIPTION	REVISIONS
9	D-UA-5410839-0-0	5		BACKPLANE	C
	B-DD-5410839-0	3		DRAWING DIRECTORY	C
10	E-IA-7009859-0-0	4		COOLING ASSY	D
	D-IA-7411599-0-0	1		DOOR RIGHT	A
	D-IA-7411600-0-0	1		DOOR LEFT	A
	B-IA-7411807-0-0	1		BRACKET MICROSWITCH	A
	C-MD-7412366-0-0	1		COVER CABLE.	A
	D-MD-7421949-0-0	1		HANGER, DOOR	*
11	E-IA-7009775-0-0	1		CHASSIS WELDMENT	A
	E-IA-7411722-0-0	1		CARD GUIDE CHASSIS	C
	E-IA-7411721-0-0	1		CHASSIS SUPPORT	C
	B-MD-7411830-0-0	1		STIFFENER CHASSIS	A

NOTES:

REVISIONS	
REV.	
CHG NO.	
DATE	

"THIS DRAWING AND SPECIFICATIONS, HEREIN, ARE THE PROPERTY OF DIGITAL EQUIPMENT CORPORATION AND SHALL NOT BE REPRODUCED OR COPIED OR USED IN WHOLE OR IN PART AS THE BASIS FOR THE MANUFACTURE OR SALE OF ITEMS WITHOUT WRITTEN PERMISSION.

COPYRIGHT© DIGITAL EQUIPMENT CORPORATION

digital

USED ON OPTION/MODEL: KL1Ø-PW

DRN.
CHK'D
ENG.
PROD.

TITLE: KL1Ø-PW BASED SYSTEM

SIZE	CODE	NUMBER	REV.
B	DD	KL1Ø-PW	A

SHEET 10 OF 11

DRB 128

MRO

	DRAWING NO.	NO. OF SHTS.	PART NO.	DESCRIPTION	REVISIONS
6	E-AD-7009415-0-0	1		BACKPLANE ASSY #2	C
	C-MD-7411943-0-0	1		BAR BACKPLANE	C
	C-MD-7411399-0-0	1		SPACER BACKPLANE	B
	D-IA-7412900-0-0	1		BRACKER LOGIC FRAME	C
	E-SC-1210258-01	4		CONN. BLOCK, 72 PIN	D
	D-PS-1211425-0-6	3		288 PIN CONN. BLOCK (H863)	H
7	D-UA-5410680-0-0	5		BACKPLANE	A
	B-DD-5410680-0	3		DRAWING DIRECTORY	A
8	E-AD-7009417-0-0	1		BACKPLANE ASSY #1	D
	C-MD-7411944-0-0	1		BAR BACKPLANE	B
	C-MD-7411399-0-0	1		SPACER BACKPLANE	B
	D-IA-7412900-0-0	1		BRACKET LOGIC FRAME	C
	E-SC-1210258-01	4			H
	D-PS-1211425-0-0	3			D

NOTES:

REVISIONS	
REV.	
CHG NO.	
DATE	

"THIS DRAWING AND SPECIFICATIONS, HEREIN, ARE THE PROPERTY OF DIGITAL EQUIPMENT CORPORATION AND SHALL NOT BE REPRODUCED OR COPIED OR USED IN WHOLE OR IN PART AS THE BASIS FOR THE MANUFACTURE OR SALE OF ITEMS WITHOUT WRITTEN PERMISSION.

COPYRIGHT© DIGITAL EQUIPMENT CORPORATION

digital

USED ON OPTION/MODEL	
KL1Ø-PW	

DRN.
CHK'D
ENG.
PROD.

TITLE KL1Ø-PW BASED SYSTEM

SIZE	CODE	NUMBER	REV.
B	DD	KL1Ø-PW	A

SHEET 9 OF 11

DRR 128

	DRAWING NO.	NO. OF SHTS.	PART NO.	DESCRIPTION	REVISIONS
3	D-IA-5011786-0-0	1		GND PLANE PROTECTIVE SHEET	A
	D-MD-5512791-0-0	1		SLEEVING TEMPLATE	*
	D-MD-5512789-0-0	1		SLEEVING TEMPLATE	A
	D-MD-5512790-0-0	1		SLEEVING TEMPLATE	*
4	E-AD-7009416-0-0	1		BACKPLANE ASSY #1	D
	C-MD-7411944-0-0	1		BAR BACKPLANE CPU	B
	C-MD-7411399-0-0	1		SPACER BACKPLANE	B
	D-IA-7412900-0-0	1		BRACKET LOGIC FRAME	C
	D-PS-1211425-0-0	3		CONN. BLOCK, 72 PIN	D
	E-SC-1210258-01	4		288 PIN CONN. BLOCK (H863)	H
5	D-UA-5410681-0-0	5		BACKPLANE	A
	B-DD-5410681-0	3		DRAWING DIRECTORY	A

NOTES:

REVISIONS	REV.	CHG NO.	DATE

"THIS DRAWING AND SPECIFICATIONS, HEREIN, ARE THE PROPERTY OF DIGITAL EQUIPMENT CORPORATION AND SHALL NOT BE REPRODUCED OR COPIED OR USED IN WHOLE OR IN PART AS THE BASIS FOR THE MANUFACTURE OR SALE OF ITEMS WITHOUT WRITTEN PERMISSION.

COPYRIGHT© DIGITAL EQUIPMENT CORPORATION

DRB 126

digital

USED ON OPTION/MODEL	
KL1Ø-PW	

DRN.	
CHK'D	
ENG.	
PROD.	

TITLE: KL1Ø-PW BASED SYSTEM

SIZE	CODE	NUMBER	REV.
B	DD	KL1Ø-PW	A

SHEET 8 OF 11

MRO

DRAWING NO.	NO. OF SHTS.	PART NO.	DESCRIPTION	REVISIONS
K-PL-7021449-Ø-DBP	1		KL1Ø-PV TO KL1Ø-PW WIRED ASSY	A
A-WL-KL1Ø-PW-1	1		KL1Ø-PV TO KL1Ø-PW CONVERSION SHT	A
E-AD-7013271-0-0	2		WIRED ASSY CPU	A
A-PL-7013271-0-0	2		WIRED ASSY CPU	A
D-MD-7412001-0-0	1		BAR BACKPLANE TOP & BOT.	A
C-MD-7411147-0-0	1		STRIP GROUND	*
A-DC-7411881-0-0	1		DECAL, LOGIC ASSY REVISION	B
K-WL-KL1Ø-PV-WL	1		WIRE LIST CPU	C
D-WT-KL1Ø-Ø-AWT4	2		CPU ASSY PROCEDURE	C
A-WL-KL1Ø-PV-1	1		GENERAL WIRING SHEET	*
K-WL-KL1Ø-PV-Ø	1		REDUCED WIRE LIST	C
A-MD-7418126-0-0	1		SLEEVING, REWORK	A
A-WT-7013271-0-0	1		AWT REV STATUS	C
D-MD-7417560-0-0	1		FIXTURE DRAWINGS REF	A
E-MD-9606103-0-0	1		WIRE WRAP PALLET	*
C-MD-7417282-0-0	1		SPACER, CONN. BLOCK	A
D-IA-5011783-0-0	1		GND PLANE PROTECTIVE CHART	A
D-IA-5011784-0-0	1		GND PLANE PROTECTIVE CHART	*
D-IA-5011785-0-0	1		GND PLANE PROTECTIVE CHART	*

NOTES:

REVISIONS	
REV.	
CHG NO.	
DATE	

"THIS DRAWING AND SPECIFICATIONS, HEREIN, ARE THE PROPERTY OF DIGITAL EQUIPMENT CORPORATION AND SHALL NOT BE REPRODUCED OR COPIED OR USED IN WHOLE OR IN PART AS THE BASIS FOR THE MANUFACTURE OR SALE OF ITEMS WITHOUT WRITTEN PERMISSION.

COPYRIGHT© DIGITAL EQUIPMENT CORPORATION

digital

USED ON OPTION/MODEL	
KL1Ø-PW	

DRN.	
CHK'D	
ENG.	
PROD.	

TITLE KL1Ø-PW BASED SYSTEM

SIZE	CODE	NUMBER	REV.
B	DD	KL1Ø-PW	A

SHEET 7 OF 11

DRB 128

MRO

DRAWING NO.	NO. OF SHTS.	PART NO.	DESCRIPTION	REVISIONS
D-UA-M853-0-0	1		LARGER CACHE EXTENSION	A
D-DD-M853-0	1		M853 DRAWING DIRECTORY	A
D-UA-M854-0-0	1		PHYSICAL MEMORY ADDRESS LARGER CAC	A
D-DD-M854-0	1		M854 DRAWING DIRECTORY	A
E-UA-M855-Ø-Ø	1		2 WAY ASSOCIATIVE PAGING BOARD	A1
D-UA-M855-0-0	1		2 WAY ASSOCIATIVE PAGING BOARD	B
D-DD-M855-0	2		M855 DRAWING DIRECTORY	A
D-UA-M856-0-0	2		LARGER CACHE DATA	A
D-DD-M856-0	1		M856 DRAWING DIRECTORY	A
D-UA-M857-0-0	1		MBOX CONTROL 3 LARGER CACHE	A
D-DD-M857-0	1		M857 DRAWING DIRECTORY	A
D-MU-KL10-PW-CPU	1		MODULE UTILIZATION	A
B-MD-7413992-0-0			ROD, SUPPORT	
A-SP-DTE20-0-1	4		DTE20 MANUFACTURING TEST SPEC	*
C-SP-KL10-PV-7	1		KL10 DESKEW INFORMATION	*
A-SP-KL10-PV-6	5		DMA20 SETUP PROCEDURE	*

NOTES:

REVISIONS	
REV.	
CHG NO.	
DATE	

"THIS DRAWING AND SPECIFICATIONS, HEREIN, ARE THE PROPERTY OF DIGITAL EQUIPMENT CORPORATION AND SHALL NOT BE REPRODUCED OR COPIED OR USED IN WHOLE OR IN PART AS THE BASIS FOR THE MANUFACTURE OR SALE OF ITEMS WITHOUT WRITTEN PERMISSION.

COPYRIGHT© DIGITAL EQUIPMENT CORPORATION

digital

USED ON OPTION/MODEL	
KL10-PW	

DRN.
CHK'D
ENG.
PROD.

TITLE KL10-PW BASED SYSTEM

SIZE	CODE	NUMBER	REV.
B	DD	KL10-PW	A

SHEET 6 OF 11

DRB 126

MRO

DRAWING NO.	NO. OF SHTS.	PART NO.	DESCRIPTION	REVISIONS
D-UA-M8537-0-0	5		MBOX CONTROL #4	D
B-DD-M8537-0	3		M8537 DRAWING DIRECTORY	D
D-UA-M8538-0-0	5		MTR (METER)	D
B-DD-M8538-0	3		M8538 DRAWING DIRECTORY	E
D-UA-M8545-0-0	5		APR (ARITHMETIC PROCESS REGISTER)	*
B-DD-M8545-0	1		DRAWING DIRECTORY	*
D-UA-M8533-0-0	5		CHANNEL CONTROL	B
B-DD-M8533-0	2		M8533 DRAWING DIRECTORY	B
D-UA-M8534-0-0	5		CHANNEL CONTROL WORD	C
B-DD-M8534-0	3		M8534 DRAWING DIRECTORY	D
D-UA-M8535-0-0	5		CHANNEL RAM CONTROL	C
B-DD-M8535-0	3		M8535 DRAWING DIRECTORY	C
D-UA-M8536-0-0	5		CHANNEL CONTROL LOGIC	D
B-DD-M8536-0	3		M8536 DRAWING DIRECTORY	D
E-UA-M852-0-0	1		LARGER CACHE DIRECTORY	A
D-DD-M852-0	1		M852 DRAWING DIRECTORY	A

NOTES:

REVISIONS	
REV.	
CHG NO.	
DATE	

"THIS DRAWING AND SPECIFICATIONS, HEREIN, ARE THE PROPERTY OF DIGITAL EQUIPMENT CORPORATION AND SHALL NOT BE REPRODUCED OR COPIED OR USED IN WHOLE OR IN PART AS THE BASIS FOR THE MANUFACTURE OR SALE OF ITEMS WITHOUT WRITTEN PERMISSION.

COPYRIGHT© DIGITAL EQUIPMENT CORPORATION

digital

USED ON OPTION/MODEL	
KL10-PW	

DRN.
CHK'D
ENG.
PROD.

TITLE KL10-PW BASED SYSTEM

SIZE	CODE	NUMBER	REV.
B	DD	KL10-PW	A

SHEET 5 OF 11

DRB 126

MRO

DRAWING NO.	NO. OF SHTS.	PART NO.	DESCRIPTION	REVISIONS
D-UA-M8542-0-0	5		VIRTUAL MEMORY ADDRESS	*
B-DD-M8542-0	1		M8542 DRAWING DIRECTORY	*
D-UA-M8524-0-0	5		SCAD PC13-17 PC FLAGS	E
B-DD-M8524-0	3		M8524 DRAWING DIRECTORY	E
D-UA-M8525-0-0	6		CONTROL REGISTER	F
B-DD-M8525-0	3		M8525 DRAWING DIRECTORY	F
D-UA-M8526-YA-0	5		CLOCK CONTROL	A
B-DD-M8526-YA	3		M8526-YA DRAWING DIRECTORY	A
D-UA-M8543-0-0	5		EBOX CONTROL LOGIC	*
B-DD-M8543-0	1		M8543 DRAWING DIRECTORY	*
D-UA-M8548-0-0	5		CONTROL RAM	*
B-DD-M8548-0	1		M8543 DRAWING DIRECTORY	*
D-UA-M8529-YA-0	5		MBOX CONTROL LOGIC	*
B-DD-M8529-YA	1		M8529-YA DRAWING DIRECTORY	*
D-UA-M8544-0-0	6		EBOX MEMORY CONTROL	*
B-DD-M8544-0	1		DRAWING DIRECTORY	*
D-UA-M8532-YA-0	3		PRIORITY INTERRUPT	A
B-DD-M8532-YA-0	1		RAWING DIRECTORY	A

NOTES:

REVISIONS	
REV.	
CHG NO.	
DATE	

"THIS DRAWING AND SPECIFICATIONS, HEREIN, ARE THE PROPERTY OF DIGITAL EQUIPMENT CORPORATION AND SHALL NOT BE REPRODUCED OR COPIED OR USED IN WHOLE OR IN PART AS THE BASIS FOR THE MANUFACTURE OR SALE OF ITEMS WITHOUT WRITTEN PERMISSION.

COPYRIGHT© DIGITAL EQUIPMENT CORPORATION

digital

USED ON OPTION/MODEL	
KL10-PW	

DRN.	
CHK'D	
ENG.	
PROD.	

TITLE KL10-PW BASED SYSTEM

SIZE	CODE	NUMBER	REV.
B	DD	KL10-PW	A

SHEET 4 OF 11

DRAWING NO.	NO. OF SHTS.	PART NO.	DESCRIPTION	REVISIONS
D-TC-KL1Ø-PW-1	9		KL1Ø-PW FIELD MAINT. PRINT SET (TC)	A
	-	KL1Ø-PW	KL1Ø-PW BASED SYSTEM	A1
1 E-UA-KL1Ø-PW-Ø-Ø	1		KL1Ø-PW CPU LOGIC ASSY (UA)	A
K-PL-KL1Ø-PW-Ø-DBP	2		KL1Ø-PW CPU LOGIC ASSY (PL)	A
D-SP-KL1Ø-PW-2	1		OPTION/SERIAL NUMBER CHART	A
D-UA-M854Ø-Ø-Ø	5		SHIFT MATRIX	*
B-DD-M854Ø-Ø-Ø	1		DRAWING DIRECTORY	*
D-UA-M8541-Ø-Ø	5		CONTROL ROM ADDRESS	*
B-DD-M8541-Ø	1		DRAWING DIRECTORY	*
D-UA-M8512-Ø-Ø	5		DATA PATH BOARD	B
B-DD-M8512-Ø	3		M8512 DRAWING DIRECTORY	B
D-UA-M8513-YA-Ø	6		CACHE CONTROL	A
B-DD-M8513-YA	3		M8513-YA DRAWING CONTROL DIRECTORY	A
D-UA-M8516-Ø-Ø	5		ECL, TTL TRANSLATOR	D
B-DD-M8516-Ø	3		M8516 DRAWING DIRECTORY	D
D-UA-M8517-Ø-Ø	5		MEMORY BUFFER	A
B-DD-M8517-Ø	2		M8517 DRAWING DIRECTORY	A
D-UA-M8519-Ø-Ø	5		INT MEM BUS TRANSLATOR (SBUS)	B
B-DD-M8519-Ø	3		M8519 DRAWING DIRECTORY	B
D-UA-M8522-Ø-Ø	5		IR. DRAM & CARRY	A
B-DD-M8522-Ø	2		M8522 DRAWING DIRECTORY	A

NOTES:

REVISIONS	
REV.	
CHG NO.	
DATE	

"THIS DRAWING AND SPECIFICATIONS, HEREIN, ARE THE PROPERTY OF DIGITAL EQUIPMENT CORPORATION AND SHALL NOT BE REPRODUCED OR COPIED OR USED IN WHOLE OR IN PART AS THE BASIS FOR THE MANUFACTURE OR SALE OF ITEMS WITHOUT WRITTEN PERMISSION.

COPYRIGHT© 1984 DIGITAL EQUIPMENT CORPORATION

digital

USED ON OPTION/MODEL	
KL1Ø-PW	

DRN.	Hans Celeton	7-2-84
CHK'D		
ENG.		
PROD.		

TITLE KL1Ø-PW BASED SYSTEM

SIZE	CODE	NUMBER	REV.
B	DD	KL1Ø-PW	A

SHEET 3 OF 11

DRB 126

MRO

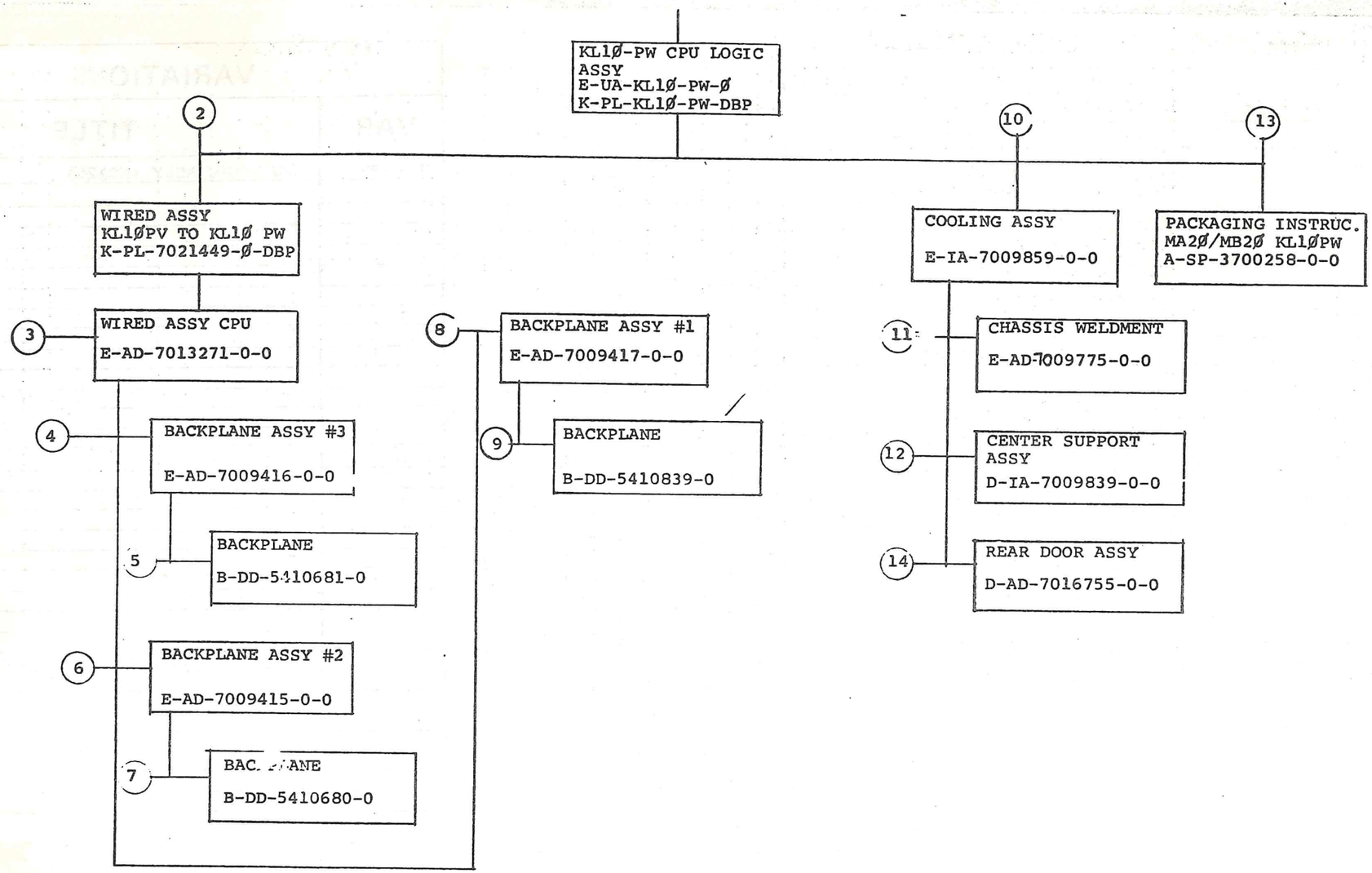

TITLE		SIZE	CODE	NUMBER	REV.
KL1Ø-PW BASED SYSTEM	SHEET 2 OF 11	B		KL1Ø-PW	A

DRB 107A
EN-01237-16-REVA(396)

MRO

VARIATIONS

VAR	TITLE
KL10-PW	CPU LOGIC ASSY (MCA25)

REVISION HISTORY		
DATE	ECO NUMBER	REV.
	RELEASED	A

DRN. Lene Alston	DATE 7-2-84	TITLE KL10-PW BASED SYSTEM
CHK'D. [illegible]	DATE 30 JUL 84	
DES. ENG. [illegible]	DATE 27-Jul-84	DOCUMENT NUMBER
RESP. ENG. [illegible]	DATE 27-Jul-84	SIZE B · CODE DD · NUMBER KL10-PW · REV. A
MFG. ENG. [illegible]	DATE 27 JUL 84	SHEET 1 OF 11

DRB 109C
EN-01236-16-REVA(398)

MRO

RESISTOR LOC(PIN)	SHOWN ON DRW#	REF	VALUE	TERMINATES SIGNAL
R273(1)	DX01	A6	68Ω	%E20(3)
R274(1)	DX01	A6	68Ω	%E20(7)
R170(1)	DX01	C6	68Ω	%E21(12)
R169(1)	DX01	C6	68Ω	%E21(16)
R198(1)	DX01	D6	68Ω	%E21(3)
R272(1)	DX01	D6	68Ω	%E21(7)
R87(1)	DX06	D6	68Ω	%E32(14)
R71(1)	DX06	B2	68Ω	%E32(15)
R197(1)	DX01	A7	68Ω	%E32(3)
R171(1)	DX06	B2	68Ω	%E32(9)
R297(1)	DX05	D5	68Ω	%E33(1)
R295(1)	DX05	D5	68Ω	%E33(14)
R296(1)	DX05	D5	68Ω	%E33(15)
R298(1)	DX05	D5	68Ω	%E33(2)
R178(1)	DX05	D7	68Ω	%E34(1)
R180(1)	DX05	D7	68Ω	%E34(14)
R179(1)	DX05	D7	68Ω	%E34(15)
R181(1)	DX05	D7	68Ω	%E34(2)
R92(1)	DX05	D2	68Ω	%E36(1)
R95(1)	DX05	D2	68Ω	%E36(14)
R94(1)	DX05	D2	68Ω	%E36(15)
R93(1)	DX05	D2	68Ω	%E36(2)
R292(1)	DX01	A7	68Ω	DATA VALID[N/10+1, A OUT, B OUT] H
R152(1)	DX02	B7	68Ω	DX02 SBUS0 DATA IN [N+00] H
R194(1)	DX02	B2	68Ω	DX02 SBUS0 DATA IN [N+01] H
R192(1)	DX02	A4	68Ω	DX02 SBUS0 DATA IN [N+02] H
R154(1)	DX02	B4	68Ω	DX02 SBUS0 DATA IN [N+03] H
R190(1)	DX02	A7	68Ω	DX02 SBUS0 DATA IN [N+04] H
R156(1)	DX02	A2	68Ω	DX02 SBUS0 DATA IN [N+05] H
R153(1)	DX02	C7	68Ω	DX02 SBUS1 DATA IN [N+00] H
R195(1)	DX02	C2	68Ω	DX02 SBUS1 DATA IN [N+01] H
R193(1)	DX02	B4	68Ω	DX02 SBUS1 DATA IN [N+02] H
R155(1)	DX02	C4	68Ω	DX02 SBUS1 DATA IN [N+03] H
R191(1)	DX02	B7	68Ω	DX02 SBUS1 DATA IN [N+04] H
R157(1)	DX02	B2	68Ω	DX02 SBUS1 DATA IN [N+05] H
R158(1)	DX03	B7	68Ω	DX03 SBUS0 DATA IN [N+06] H
R146(1)	DX03	B2	68Ω	DX03 SBUS0 DATA IN [N+07] H
R189(1)	DX03	A4	68Ω	DX03 SBUS0 DATA IN [N+08] H
R185(1)	DX03	B4	68Ω	DX03 SBUS0 DATA IN [N+09] H
R148(1)	DX03	A7	68Ω	DX03 SBUS0 DATA IN [N+10] H

RESISTOR LOC(PIN)	SHOWN ON DRW#	REF	VALUE	TERMINATES SIGNAL
R187(1)	DX03	A2	68Ω	DX03 SBUS0 DATA IN [N+11] H
R159(1)	DX03	C7	68Ω	DX03 SBUS1 DATA IN [N+06] H
R147(1)	DX03	C2	68Ω	DX03 SBUS1 DATA IN [N+07] H
R188(1)	DX03	B4	68Ω	DX03 SBUS1 DATA IN [N+08] H
R186(1)	DX03	C4	68Ω	DX03 SBUS1 DATA IN [N+09] H
R149(1)	DX03	B7	68Ω	DX03 SBUS1 DATA IN [N+10] H
R184(1)	DX03	B2	68Ω	DX03 SBUS1 DATA IN [N+11] H
R286(1)	DX04	B7	68Ω	DX04 SBUS0 DATA IN [N+12] H
R84(1)	DX04	B2	68Ω	DX04 SBUS0 DATA IN [N+13] H
R85(1)	DX04	A4	68Ω	DX04 SBUS0 DATA IN [N+14] H
R287(1)	DX04	B4	68Ω	DX04 SBUS0 DATA IN [N+15] H
R119(1)	DX04	A7	68Ω	DX04 SBUS0 DATA IN [N+16] H
R121(1)	DX04	A2	68Ω	DX04 SBUS0 DATA IN [N+17] H
R285(1)	DX04	C7	68Ω	DX04 SBUS1 DATA IN [N+12] H
R83(1)	DX04	C2	68Ω	DX04 SBUS1 DATA IN [N+13] H
R86(1)	DX04	B4	68Ω	DX04 SBUS1 DATA IN [N+14] H
R288(1)	DX04	C4	68Ω	DX04 SBUS1 DATA IN [N+15] H
R118(1)	DX04	B7	68Ω	DX04 SBUS1 DATA IN [N+16] H
R120(1)	DX04	B2	68Ω	DX04 SBUS1 DATA IN [N+17] H
R150(1)	DX06	C6	68Ω	-DX06 BUS 0 SEL H
R151(1)	DX06	B6	68Ω	-DX06 BUS 1 SEL H
R282(1)	DX06	A1	68Ω	DX06 DATA TO MEM DISABLE A H
R279(1)	DX06	A1	68Ω	DX06 DATA TO MEM DISABLE B H
R237(1)	DX06	A1	68Ω	DX06 DATA TO MEM DISABLE C H
R106(1)	DX06	B1	68Ω	DX06 DATA TO MEM DISABLE D H
R262(1)	DX06	B1	68Ω	DX06 DATA TO MEM DISABLE E H
R196(1)	DX06	A1	68Ω	DX06 DATA TO MEM DISABLE F H
R290(1)	DX06	C2	68Ω	DX06 SBUS0 [N/10+1,DATA PAR IN, SPARE] H
R291(1)	DX06	C2	68Ω	DX06 SBUS1 [N/10+1,DATA PAR IN, SPARE] H
R97(1)	DX02	C7	68Ω	MB [N+00] H
R263(1)	DX02	C3	68Ω	MB [N+01] H
R284(1)	DX02	B5	68Ω	MB [N+02] H
R96(1)	DX02	C5	68Ω	MB [N+03] H
R281(1)	DX02	B7	68Ω	MB [N+04] H
R72(1)	DX02	B3	68Ω	MB [N+05] H
R73(1)	DX03	C7	68Ω	MB [N+06] H
R45(1)	DX03	C3	68Ω	MB [N+07] H
R280(1)	DX03	B5	68Ω	MB [N+08] H
R236(1)	DX03	C5	68Ω	MB [N+09] H
R46(1)	DX03	B7	68Ω	MB [N+10] H

RESISTOR LOC(PIN)	SHOWN ON DRW#	REF	VALUE	TERMINATES SIGNAL
R278(1)	DX03	B3	68Ω	MB [N+11] H
R283(1)	DX04	C7	68Ω	MB [N+12] H
R108(1)	DX04	C3	68Ω	MB [N+13] H
R107(1)	DX04	B5	68Ω	MB [N+14] H
R275(1)	DX04	C5	68Ω	MB [N+15] H
R172(1)	DX04	B7	68Ω	MB [N+16] H
R173(1)	DX04	B3	68Ω	MB [N+17] H
R183(1)	DX01	C3	68Ω	MEM RQ [N/10+1,0,3] H
R276(1)	DX06	B2	68Ω	MEM T[I]1
R289(1)	DX06	B2	68Ω	MEM T[I]3
R300(1)	DX01	C3	68Ω	MEM [N/10+1,RQ 1,RD RQ] H
R299(1)	DX01	B3	68Ω	MEM [N/10+1,RQ 2,WR RQ] H
R161(1)	DX01	D3	68Ω	MEM [N/10+1,START A,START B] H
R91(1)	DX05	D3	68Ω	MEM [P/12+1,SPARE 33,SPARE32] H
R176(1)	DX05	D8	68Ω	PMA [P+14] H
R177(1)	DX05	D8	68Ω	PMA [P+15] H
R175(1)	DX05	D8	68Ω	PMA [P+16] H
R174(1)	DX05	D8	68Ω	PMA [P+17] H
R209(1)	DX05	D6	68Ω	PMA [P+18] H
R208(1)	DX05	D6	68Ω	PMA [P+19] H
R211(1)	DX05	D6	68Ω	PMA [P+20] H
R210(1)	DX05	C6	68Ω	PMA [P+21] H
R293(1)	DX05	C8	68Ω	[N+1,SBUS ADR HOLD H,MEM TERM 18]
R160(1)	DX01	B7	68Ω	[N/10+1,CLK SBUS,SPARE] CLK H
R199(1)	DX06	B3	68Ω	[N/10+1,MB PAR,SPARE7] H
R277(1)	DX06	B2	68Ω	[N/10+1,MB23 SEQ RQ,MEM DATA TO MEM] H
R182(1)	DX01	A3	68Ω	-[N/10+1,MEM DIAG,-MEM ADR PAR] H
R294(1)	DX06	D7	68Ω	[N/10+1,MEM SPARE,DIAG MEM RESET] H
R88(1)	DX05	D3	68Ω	[P/12+1,PMA 22,SBUS ADR 34] H
R89(1)	DX05	D3	68Ω	[P/12+1,PMA 23,SBUS ADR 35] H
R90(1)	DX05	D3	68Ω	[P/12+1,PMA 24,PMA 25] H

NOTE:

1. ALL TERMINATORS HAVE PIN TWO CONNECTED TO -2.0V AND ARE 5% 1/4WATT UNLESS OTHERWISE SPECIFIED
2. ENTRIES ARE SORTED BY SIGNAL NAME
3. % INDICATES OUTPUT OF DIP LOC AND
   () INDICATES PIN NUMBER

"THIS DRAWING AND SPECIFICATIONS, HEREIN, ARE THE PROPERTY OF DIGITAL EQUIPMENT CORPORATION AND SHALL NOT BE REPRODUCED OR COPIED OR USED IN WHOLE OR IN PART AS THE BASIS FOR THE MANUFACTURE OR SALE OF ITEMS WITHOUT WRITTEN PERMISSION. COPYRIGHT © 1978, DIGITAL EQUIPMENT CORPORATION"

REVISIONS		
CHK	CHANGE NO.	REV

digital

DRN: C Smith DATE 16-AUG-78 ENG: P Lawrence DATE Aug 17, 78 TITLE: TERMINATORS

CHK'D: M Morrell DATE Aug 17 BOARD LOCATION:

PUB:(M8581-MOS)M85811.DRW 16-AUG-78 13:47 SHEET 1 OF 1

FIRST USED ON OPTION/MODEL: MF20 NEXT HIGHER ASSEMBLY: D-DD-M8581-0

SIZE	CODE	NUMBER	REV.
D	CS	M8581-0-RES	

MR

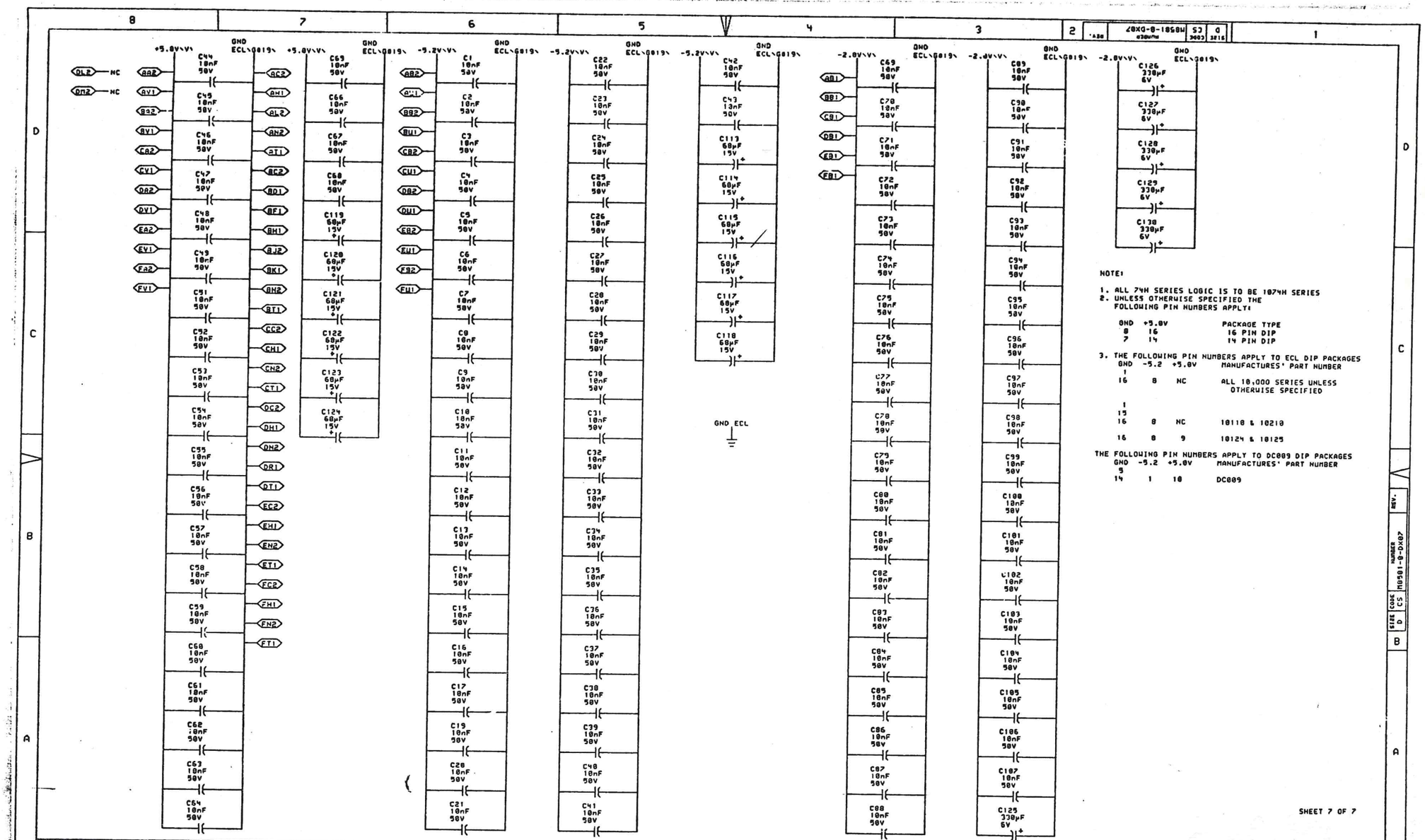
+5.0V\V\
GND ECL\0819\
-5.2V\V\
-2.0V\V\
QL2 NC
DM2 NC
AA2 AV1 BA2 BV1 CA2 CV1 DA2 DV1 EA2 EV1 FA2 FV1
AC2 AH1 AL2 AN2 AT1 BC2 BD1 BF1 BH1 BJ2 BK1 BM2 BT1 CC2 CH1 CN2 CT1 DC2 DH1 DN2 DR1 DT1 EC2 EH1 EN2 ET1 FC2 FH1 FN2 FT1
AB2 AU1 BB2 BU1 CB2 CU1 DB2 DU1 EB2 EU1 FB2 FU1
AB1 BB1 CB1 DB1 EB1 FB1
GND ECL
NOTE:
1. ALL 74H SERIES LOGIC IS TO BE 1074H SERIES
2. UNLESS OTHERWISE SPECIFIED THE FOLLOWING PIN NUMBERS APPLY:
GND +5.0V PACKAGE TYPE
8 16 16 PIN DIP
7 14 14 PIN DIP
3. THE FOLLOWING PIN NUMBERS APPLY TO ECL DIP PACKAGES
GND -5.2 +5.0V MANUFACTURES' PART NUMBER
1 16 8 NC ALL 10,000 SERIES UNLESS OTHERWISE SPECIFIED
1 15 16 8 NC 10110 & 10210
16 8 9 10124 & 10125
THE FOLLOWING PIN NUMBERS APPLY TO DC009 DIP PACKAGES
GND -5.2 +5.0V MANUFACTURES' PART NUMBER
5 14 1 10 DC009
SHEET 7 OF 7
THIS DRAWING AND SPECIFICATIONS, HEREIN, ARE THE PROPERTY OF DIGITAL EQUIPMENT CORPORATION AND SHALL NOT BE REPRODUCED OR COPIED OR USED IN WHOLE OR IN PART AS THE BASIS FOR THE MANUFACTURE OR SALE OF ITEMS WITHOUT WRITTEN PERMISSION. COPYRIGHT © 1978, DIGITAL EQUIPMENT CORPORATION.
REVISIONS
CHK CHANGE NO. REV
digital
DRN
CHK'D
DATE 17-AUG-78
ENG
DATE
DATE
BOARD LOCATION:
SHEET 1 OF 1
PUB:(M8581-MOS)DX07B.DRU 17-AUG-78 08:47
NEXT HIGHER ASSEMBLY:
FIRST USED ON OPTION/MODEL: MF20
D-DD-M8581-0
TITLE: XBUS TRANSLATOR POWER, GND, CAPS.
SIZE D
CODE CS
NUMBER M8581-0-DX07
REV.

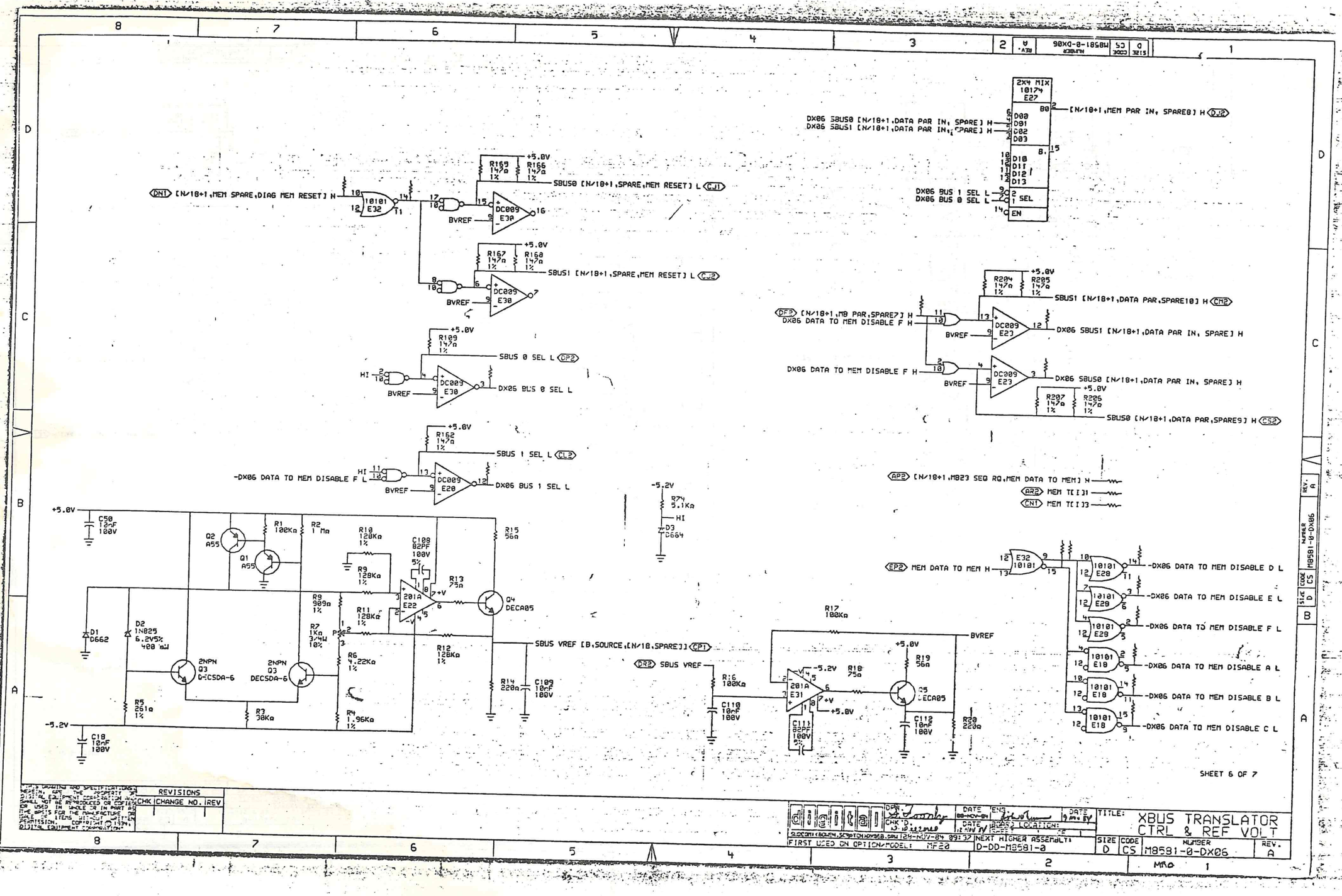
2X4 MIX
10174
E27
[N/18+1,MEM PAR IN, SPARE8] H
DX06 SBUS0 [N/18+1,DATA PAR IN, SPARE] H
DX06 SBUS1 [N/18+1,DATA PAR IN, SPARE] H
DX06 BUS 1 SEL L
DX06 BUS 0 SEL L
[N/18+1,MEM SPARE,DIAG MEM RESET] H
SBUS0 [N/18+1,SPARE,MEM RESET] L
SBUS1 [N/18+1,SPARE,MEM RESET] L
SBUS1 [N/18+1,DATA PAR,SPARE10] H
[N/18+1,MB PAR,SPARE7] H
DX06 DATA TO MEM DISABLE F H
DX06 SBUS1 [N/18+1,DATA PAR IN, SPARE] H
DX06 DATA TO MEM DISABLE F H
DX06 SBUS0 [N/18+1,DATA PAR IN, SPARE] H
SBUS0 [N/18+1,DATA PAR,SPARE9] H
SBUS 0 SEL L
DX06 BUS 0 SEL L
SBUS 1 SEL L
-DX06 DATA TO MEM DISABLE F L
DX06 BUS 1 SEL L
[N/18+1,MB23 SEQ RQ,MEM DATA TO MEM] H
MEM T[I]
MEM T[I]
MEM DATA TO MEM H
-DX06 DATA TO MEM DISABLE D L
-DX06 DATA TO MEM DISABLE E L
-DX06 DATA TO MEM DISABLE F L
-DX06 DATA TO MEM DISABLE A L
-DX06 DATA TO MEM DISABLE B L
-DX06 DATA TO MEM DISABLE C L
SBUS VREF [B,SOURCE,[N/18,SPARE]]
SBUS VREF
BVREF
SHEET 6 OF 7
REVISIONS
CHANGE NO.
TITLE: XBUS TRANSLATOR CTRL & REF VOLT
NEXT HIGHER ASSEMBLY: D-DD-M8581-0
FIRST USED ON OPTION/MODEL: MF20
SIZE D
CODE CS
NUMBER M8581-0-DX06
REV. A

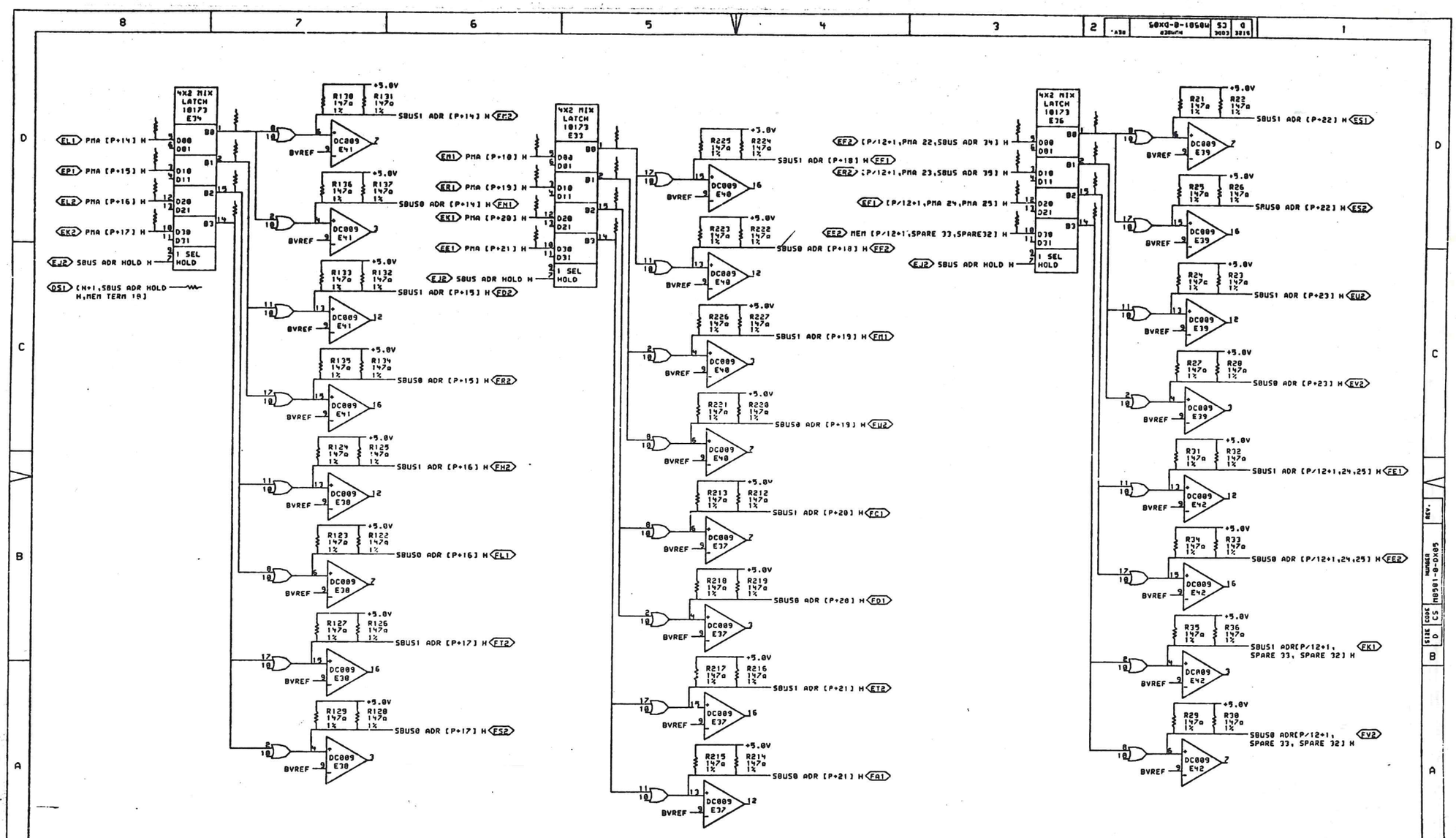

"THIS DRAWING AND SPECIFICATIONS, HEREIN, ARE THE PROPERTY OF DIGITAL EQUIPMENT CORPORATION AND SHALL NOT BE REPRODUCED OR COPIED OR USED IN WHOLE OR IN PART AS THE BASIS FOR THE MANUFACTURE OR SALE OF ITEMS WITHOUT WRITTEN PERMISSION. COPYRIGHT © 1978, DIGITAL EQUIPMENT CORPORATION"

REVISIONS		
CHK	CHANGE NO.	REV

digital

DRN D. Lucier DATE 26-JUL-78 ENG. DATE
CHK'D DATE BOARD LOCATION:
SHEET 1 OF 1
PUB:(M8581-MOS)DX05B.DAU 26-JUL-78 08:21V NEXT HIGHER ASSEMBLY:
FIRST USED ON OPTION/MODEL: MF20 D-DD-M8581-0

TITLE: XBUS TRANSLATOR ADDRESS DRIVERS

SIZE	CODE	NUMBER	REV.
D	CS	M8581-0-DX05	

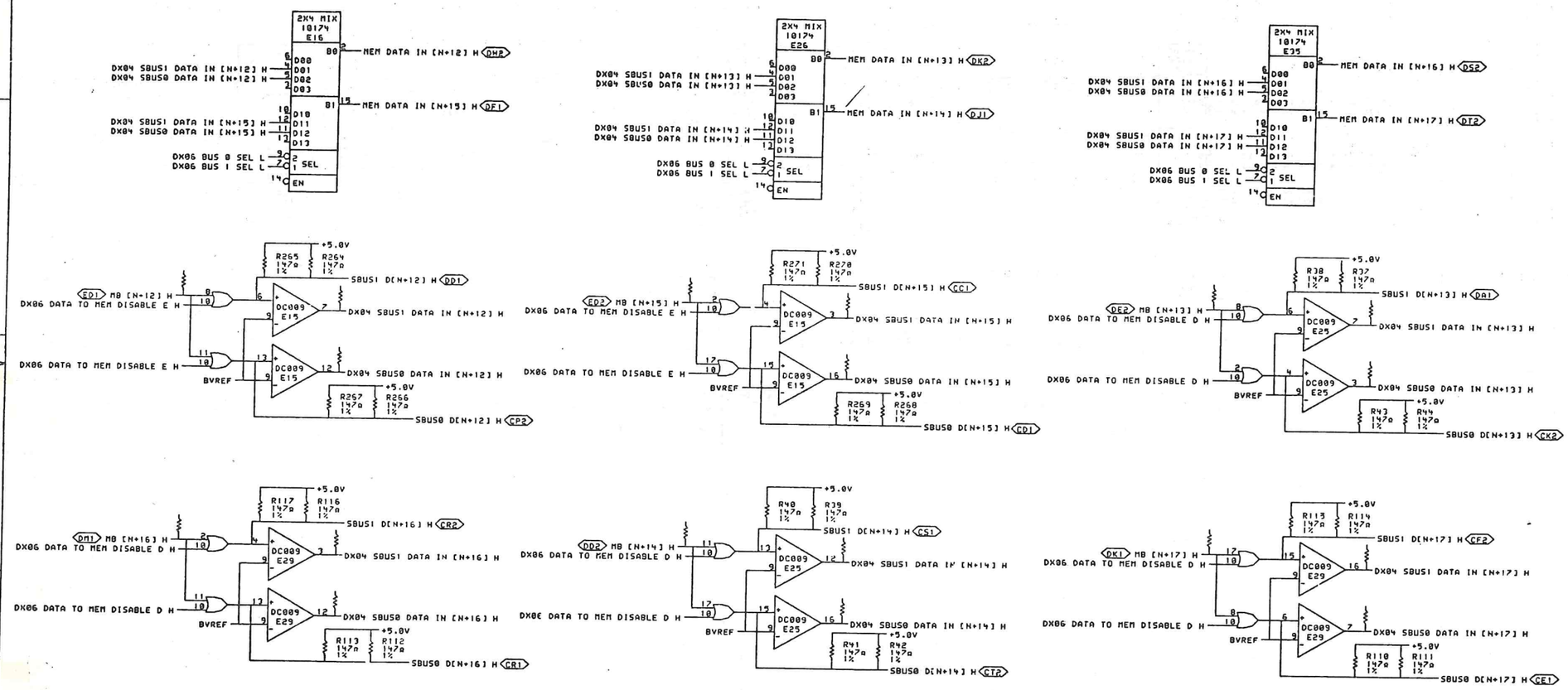

SHEET 4 OF 7

"THIS DRAWING AND SPECIFICATIONS, HEREIN, ARE THE PROPERTY OF DIGITAL EQUIPMENT CORPORATION AND SHALL NOT BE REPRODUCED OR COPIED OR USED IN WHOLE OR IN PART AS THE BASIS FOR THE MANUFACTURE OR SALE OF ITEMS WITHOUT WRITTEN PERMISSION. COPYRIGHT © 1978, DIGITAL EQUIPMENT CORPORATION"

REVISIONS		
CHK	CHANGE NO.	REV

digital

DRN: [illegible] DATE: 26-JUL-78 ENG: [illegible] DATE: [illegible]
CHK: [illegible] DATE: [illegible] BOARD LOCATION: SHEET 1 OF 1
PUB:(M8581-MOS)DX04B.DRU 26-JUL-78 08:18 NEXT HIGHER ASSEMBLY: D-DD-M8581-0
FIRST USED ON OPTION/MODEL: MF20

TITLE: XBUS TRANSLATOR DATA TRNCVR 12-17

SIZE	CODE	NUMBER	REV.
D	CS	M8581-0-DX04	

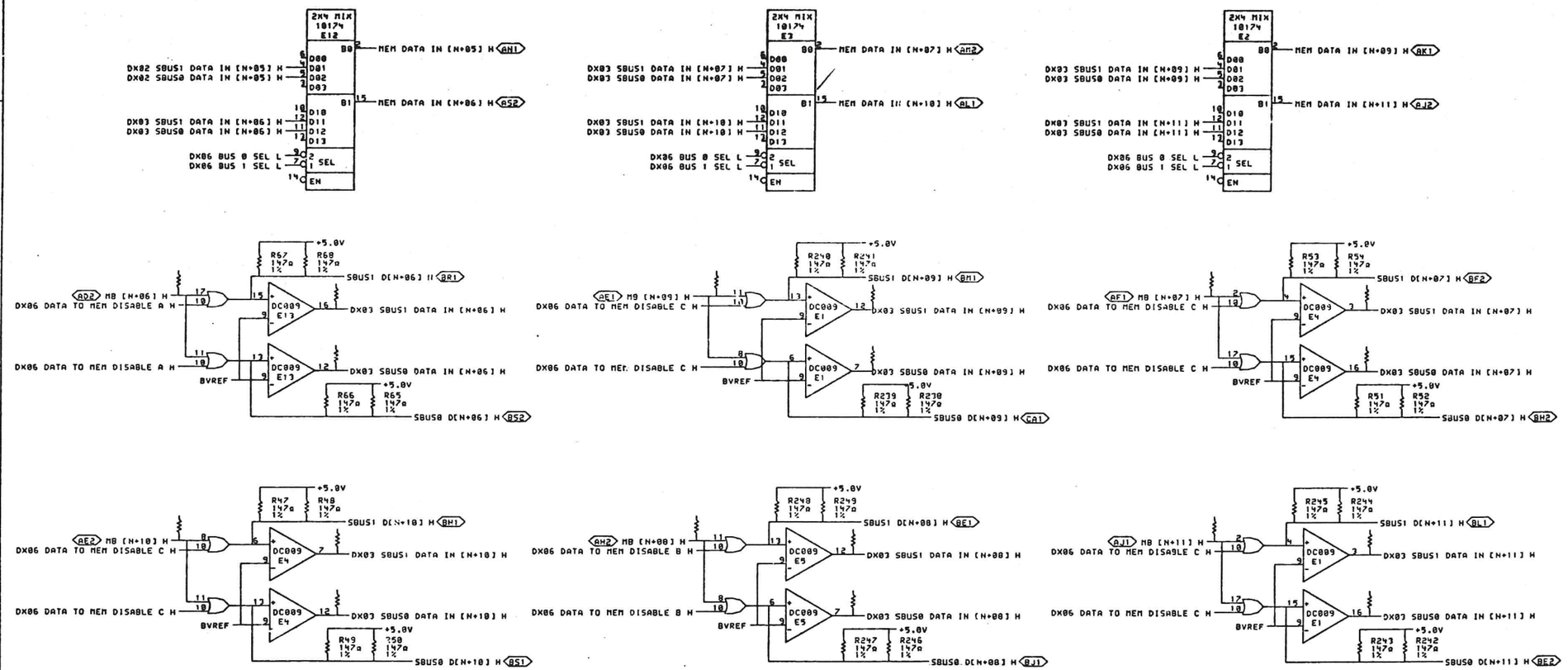

SHEET 3 OF 7

"THIS DRAWING AND SPECIFICATIONS, HEREIN, ARE THE PROPERTY OF DIGITAL EQUIPMENT CORPORATION AND SHALL NOT BE REPRODUCED OR COPIED OR USED IN WHOLE OR IN PART AS THE BASIS FOR THE MANUFACTURE OR SALE OF ITEMS WITHOUT WRITTEN PERMISSION. COPYRIGHT © 1978, DIGITAL EQUIPMENT CORPORATION"

REVISIONS		
CHK	CHANGE NO.	REV

digital

DRN P. Lucier 25-JUL-78 | DATE | ENG | DATE
CHK'D | DATE | BOARD LOCATION: | SHEET 1 OF 1
PUB: (M8581-M05)DX03.DRW 26-JUL-78 08:13 | NEXT HIGHER ASSEMBLY:
FIRST USED ON OPTION/MODEL: MF20 | D-DD-M8581-0

TITLE: XBUS TRANSLATOR DATA TRNCVR 6-11

SIZE	CODE	NUMBER	REV.
D	CS	M8581-0-DX03	

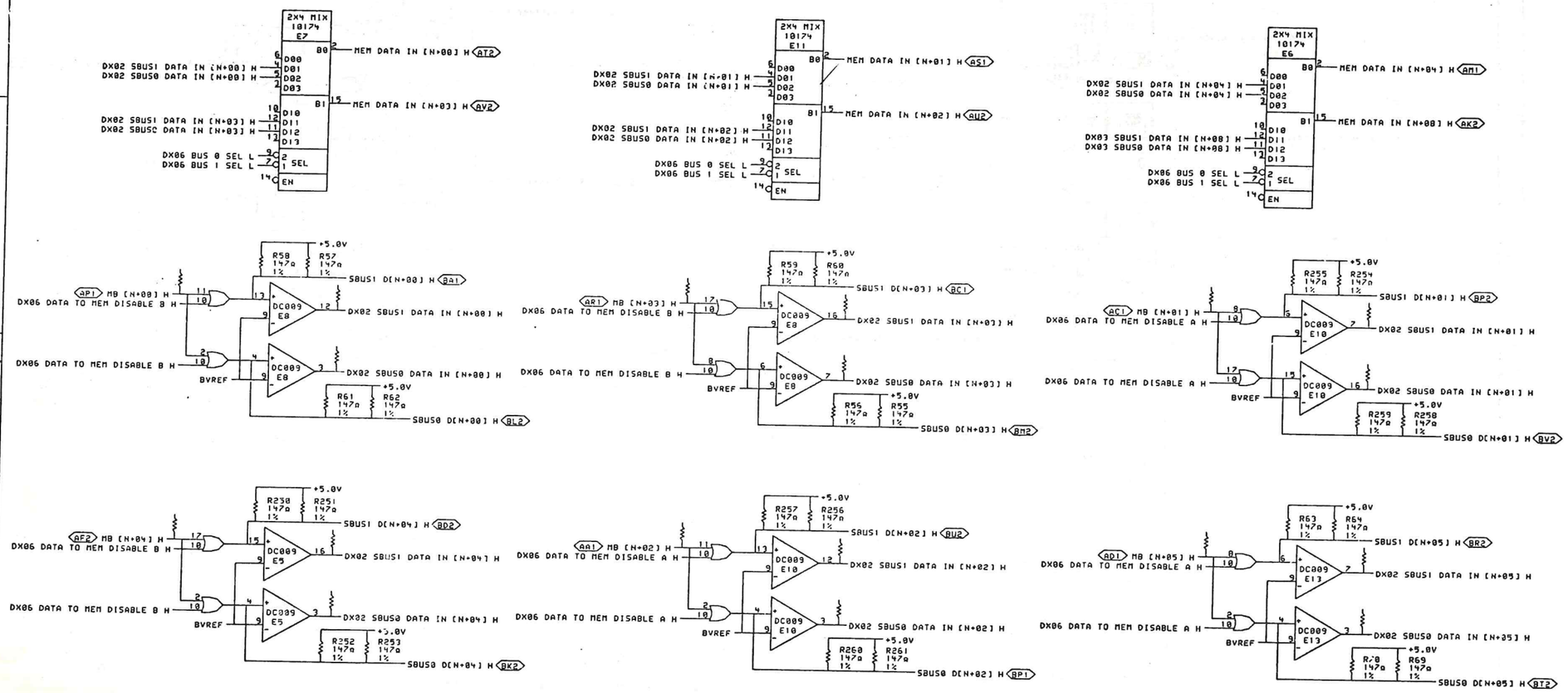

SHEET 2 OF 7

THIS DRAWING AND SPECIFICATIONS, HEREIN, ARE THE PROPERTY OF DIGITAL EQUIPMENT CORPORATION AND SHALL NOT BE REPRODUCED OR COPIED OR USED IN WHOLE OR IN PART AS THE BASIS FOR THE MANUFACTURE OR SALE OF ITEMS WITHOUT WRITTEN PERMISSION. COPYRIGHT © 1978, DIGITAL EQUIPMENT CORPORATION

REVISIONS		
CHK	CHANGE NO.	REV

digital

DRN: DATE 26-JUL-78 | ENG: DATE | CHK'D: DATE | BOARD LOCATION: SHEET 1 OF 1

PUB:(M8581-MOS)DX028.DRU 26-JUL-78 09:06 | NEXT HIGHER ASSEMBLY: D-DD-M8581-0

FIRST USED ON OPTION/MODEL: MF20

TITLE: XBUS TRANSLATOR DATA TRNCVR 0-5

SIZE	CODE	NUMBER	REV.
D	CS	M8581-0-DX02	

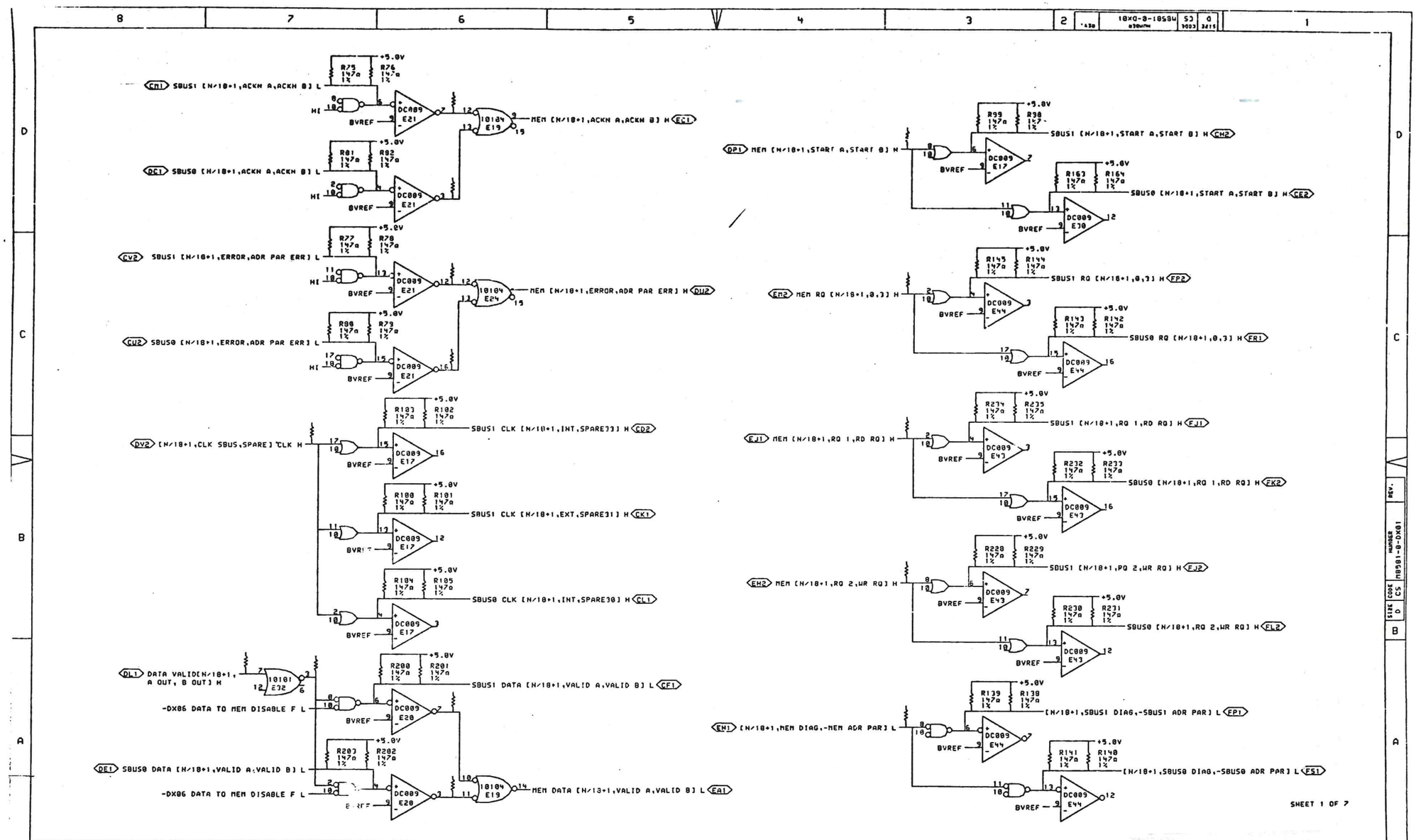

"THIS DRAWING AND SPECIFICATIONS, HEREIN, ARE THE PROPERTY OF DIGITAL EQUIPMENT CORPORATION AND SHALL NOT BE REPRODUCED OR COPIED OR USED IN WHOLE OR IN PART AS THE BASIS FOR THE MANUFACTURE OR SALE OF ITEMS WITHOUT WRITTEN PERMISSION. COPYRIGHT © 1978, DIGITAL EQUIPMENT CORPORATION"

REVISIONS		
CHK	CHANGE NO.	REV

digital

DRN P. Lucier DATE 26-JUL-78 ENG DATE Aug 2, 78
CHK'D DATE BOARD LOCATION: SHEET 1 OF 1
PUB:(M8581-MOS)DX01B.DRW 26-JUL-78 00:07 NEXT HIGHER ASSEMBLY: D-DD-M8581-0
FIRST USED ON OPTION/MODEL: MF20

TITLE: XBUS TRANSLATOR

SIZE	CODE	NUMBER	REV.
D	CS	M8581-0-DX01	

REWORK INSTRUCTION

ETCH CUT SIDE 1 AS SHOWN
0-1 AT E20(11)

"THIS DRAWING AND SPECIFICATIONS, HEREIN, ARE THE PROPERTY OF DIGITAL EQUIPMENT CORPORATION AND SHALL NOT BE REPRODUCED OR COPIED OR USED IN WHOLE OR IN PART AS THE BASIS FOR THE MANUFACTURE OR SALE OF ITEMS WITHOUT WRITTEN PERMISSION. COPYRIGHT © 1978, DIGITAL EQUIPMENT CORPORATION"

REVISIONS		
CHK	CHANGE NO.	REV

DSK19531WX.T2P[4,650] 14-AUG-78 15:39

DRW. D. Gormley DATE 14-AUG-78 ENG. P. Lawrence DATE Sept 6
CHK'D. DATE BOARD LOCATION: SHEET 5 OF 5

FIRST USED ON OPTION/MODEL: MF20 NEXT HIGHER ASSEMBLY: D-DD-M8581-0

TITLE: XBUS TRANSLATOR

SIZE	CODE	NUMBER	REV.
D	UA	M8581-0-0	A

MR

THIS DRAWING AND THE INFORMATION HEREIN, ARE THE PROPERTY OF DIGITAL EQUIPMENT CORPORATION AND SHALL NOT BE REPRODUCED OR USED IN WHOLE OR IN PART AS THE BASIS FOR THE MANUFACTURE OR SALE OF ITEMS WITHOUT WRITTEN PERMISSION.
COPYRIGHT © 1973 DIGITAL EQUIPMENT CORPORATION

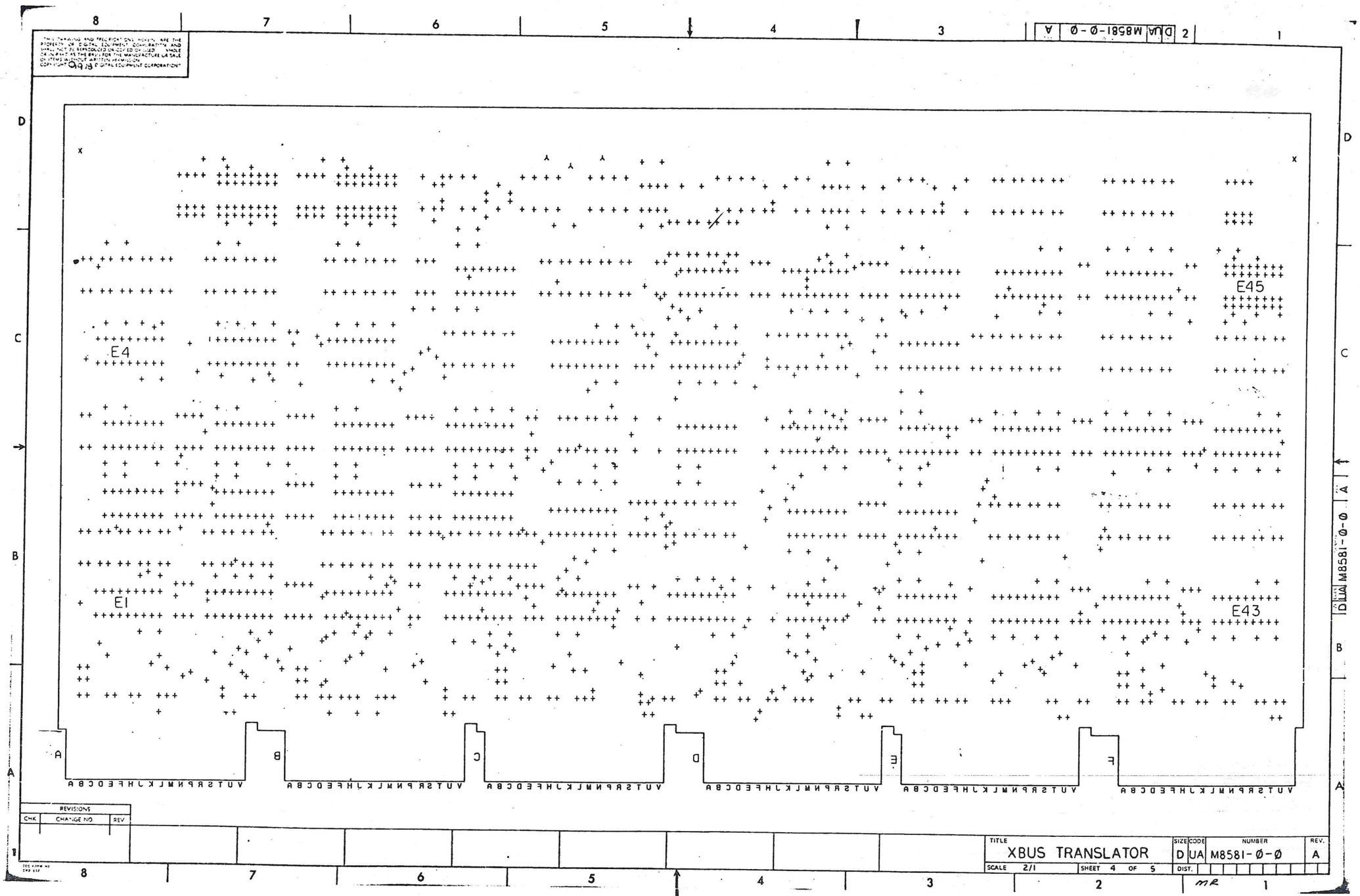

REVISIONS		
CHK	CHANGE NO.	REV

TITLE	SIZE	CODE	NUMBER	REV.
XBUS TRANSLATOR	D	UA	M8581-Ø-Ø	A
SCALE 2/1 SHEET 4 OF 5	DIST.			

MR

"THIS DRAWING AND SPECIFICATIONS, HEREIN, ARE THE PROPERTY OF DIGITAL EQUIPMENT CORPORATION AND SHALL NOT BE REPRODUCED OR COPIED OR USED IN WHOLE OR IN PART AS THE BASIS FOR THE MANUFACTURE OR SALE OF ITEMS WITHOUT WRITTEN PERMISSION. COPYRIGHT © 1972 DIGITAL EQUIPMENT CORPORATION"

NOTES:
1. FOR DRAWING DIRECTORY REFER TO: B-DD-5410680-0.
2. SHEET 2 THRU SHEET 5 ARE "E" SIZE.

QTY	REF. DESIGNATION	DESCRIPTION	PART NO.	ITEM NO.
1		ETCHED CIRCUIT BOARD	5010659	1
24		TAB, DOUBLE	9007113	2
24		EYELET	9006732	3

PARTS LIST

ETCH BOARD REV

FIRST USED ON OPTION MODEL: KLIØ

DEC NO.	EIA NO.	DEC NO.	EIA NO.

SEMICONDUCTOR CONVERSION CHART

REV.	CHANGE NO.	CHK
A	00001	

REVISIONS

D. LITTLINETZ 11-APR-77
B. G. Hunt 4-4-77

IC TYPE	GND	+5V

GND AND 5V ARE USUALLY PIN 7 AND 14 RESPECTIVELY EXCEPTIONS ARE STATED ABOVE

IC PIN LOCATIONS

DRN. R. Ramacle DATE 6 Oct 76
CHK'D. DATE 25 Feb 77
ENG. DATE 25 Feb 77
PROD. ENG. DATE 25 Feb 77
PROD. W. Eng DATE 25 Feb 77

digital

TITLE: BACKPANEL CPU #2

NEXT HIGHER ASSY: B-DD-5410680-0

SCALE: —

SHEET 1 OF 5

SIZE D | CODE UA | NUMBER 5410680-0-0 | REV. A

DIST.

SIZE D | CODE UA | NUMBER 5410680-0-0 | REV. A

digital
BACKPANEL CPU #2
SIZE CODE
NUMBER
E
UA 5410580-0-0
SIGNATURES
DATE
DRN.
CHK.
ENG.
PROJ. ENG.
PROJ.
SCALE: 2/1
SHT. 2 OF 5
NEXT HIGHER ASSY: B-DD-5410680-0
ETCH REV.
P.C. DESIGN DRTR GRUP. REV.
D-P2
D-P2
CHG CHANGE NO REV
NOTES:
E UA 5410680-0-0
A

TITLE BACKPANEL CPU #2

SCALE 2/1 SHEET 3 OF 5

REVISIONS

CHG	CHANGE NO.	REV

SIZE	NUMBER	REV.
E	UA 5410680-0-0	A

DEST

REVISIONS		
CHG	CHANGE NO.	REV

TITLE BACKPANEL CPU #2

SCALE 2/1 SHEET 4 OF 5

SIZE E | CODE UA | NUMBER 5410680-0-0 | REV. A

DIST

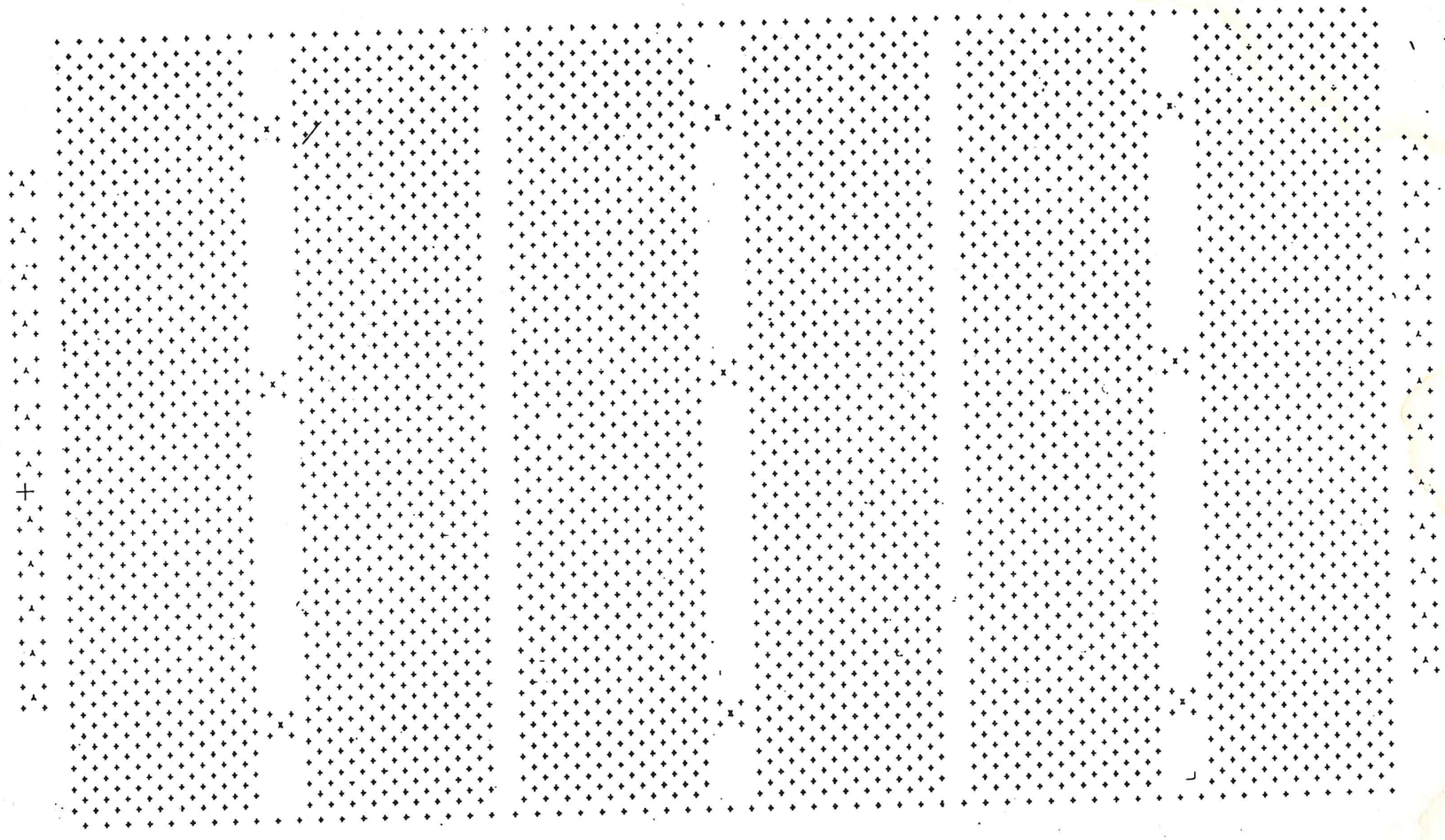

TITLE BACKPANEL CPU #2	INTERCODE E UA	NUMBER 5410680-0-0	REV. A
SCALE 2/1	SHEET 5 OF 5	DIST.	

REVISIONS: ECN | SHANDLE NO. | REV

5410680-0-0 A

digital
TITLE BACKPANEL
CPU #3
SIZE CODE
E
NUMBER
UA 5410681-0-0
REV
A
SIGNATURES
DATE
DRN.
CHK.
ENG.
PROJ. ENG.
PROD.
SCALE
SHT. 2 OF 5
PART NUMBER REV. B-DD-5410681-0
ETCH REV.
P.C. DESIGN DATA BASE REV. D-P2
D-P2
CHK CHANGE NO. REV
CODE
NOTES:
UA 5410681-0 A

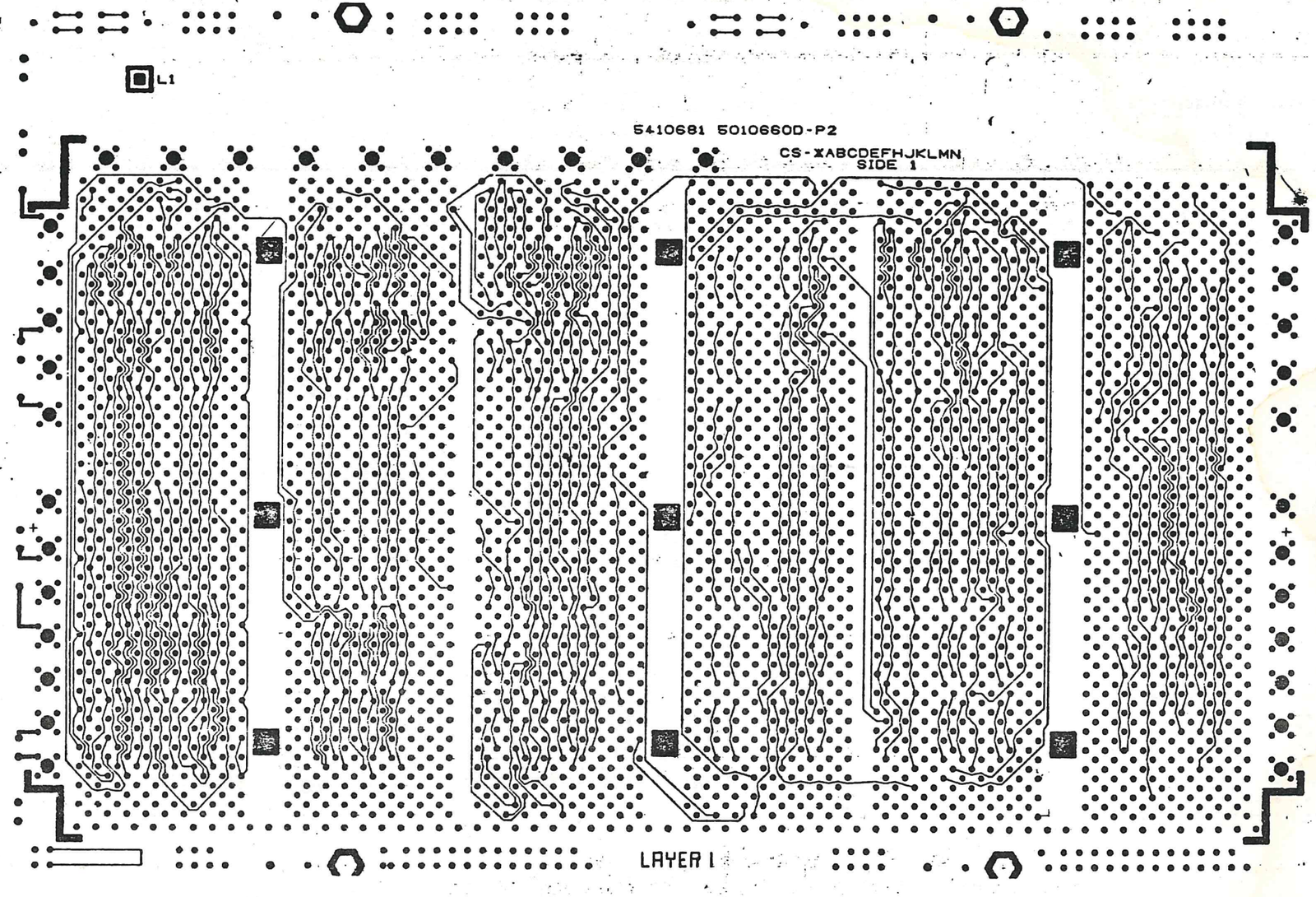

TITLE BACKPLANE CPU #3

SCALE 2/1 SHEET 3 OF 5

PROJECT E LA

DRAWING 5410681-0-0

REV. A

DCT.

5410681-0-0 A

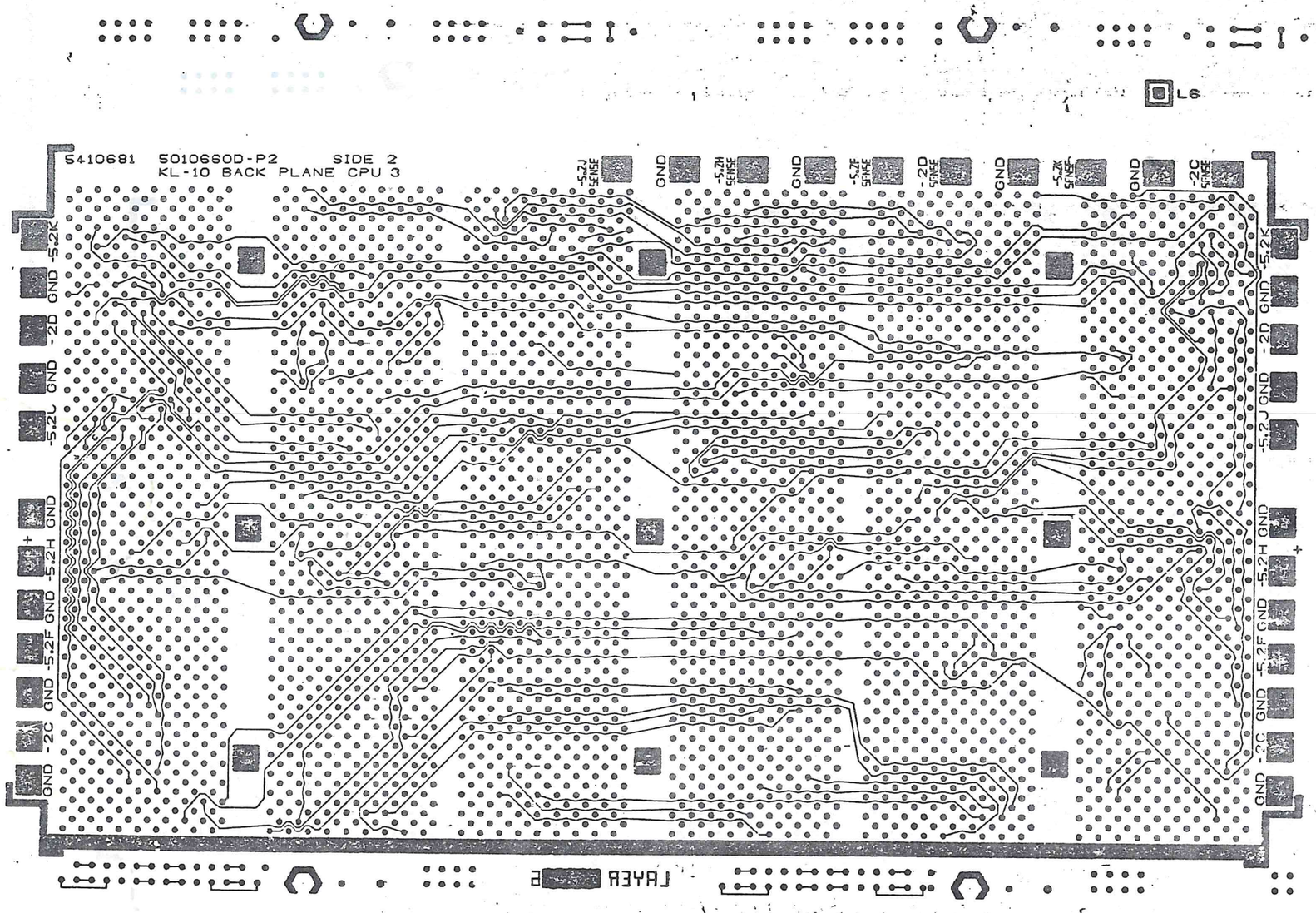

REVISIONS		
CHG	CHANGE NO.	REV.

TITLE BACKPANEL CPU #3

SIZE E CODE UA NUMBER 5410681-0-0 REV. A

SCALE 2/1 SHEET 4 OF 5 DIST.

5410681-0-0 A

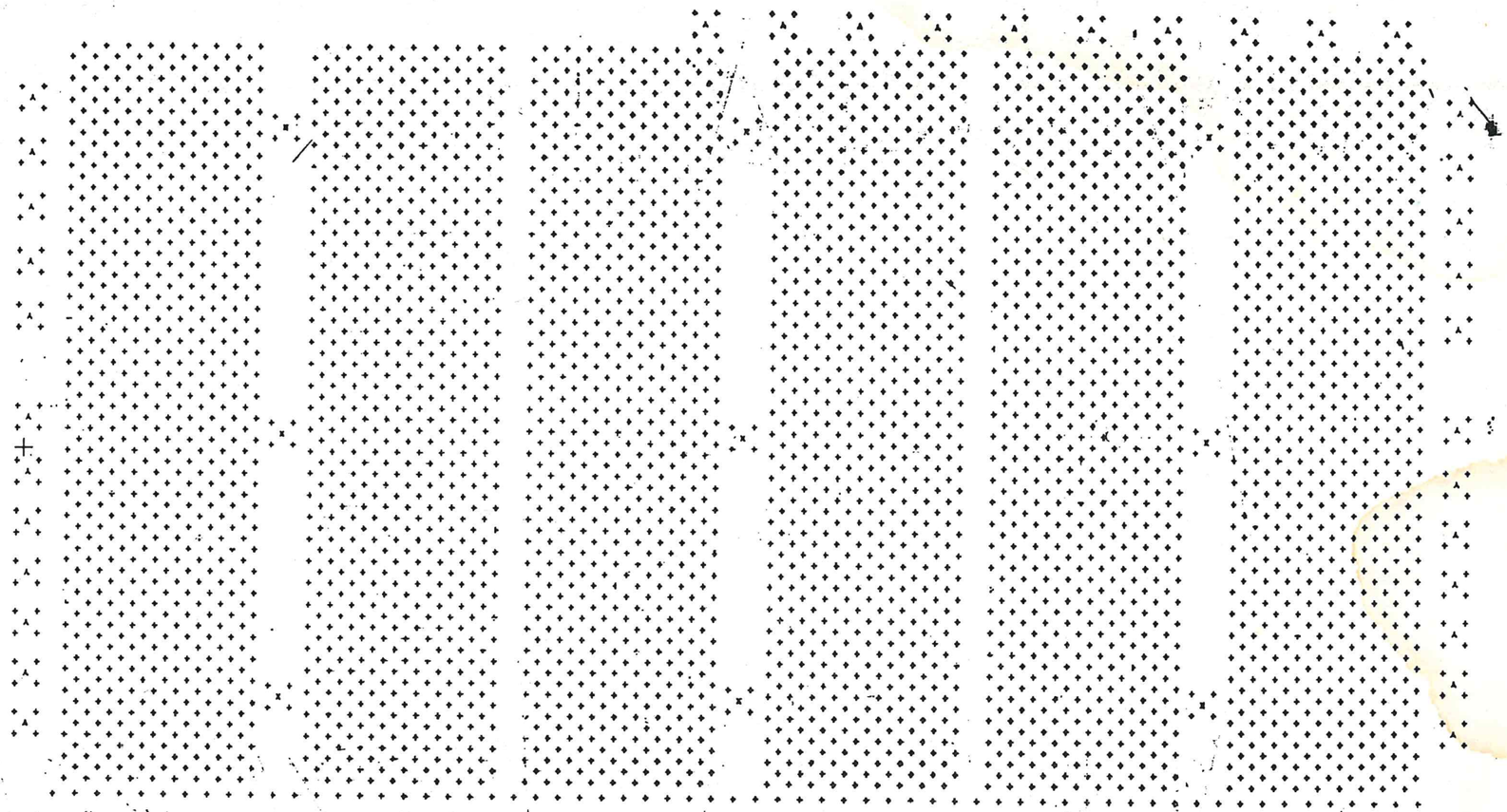

TITLE BACKPANEL CPU#3	E	UA	5410681-0-0
SCALE 2/1 SHEET 5 OF 5	UNIT		REV. A

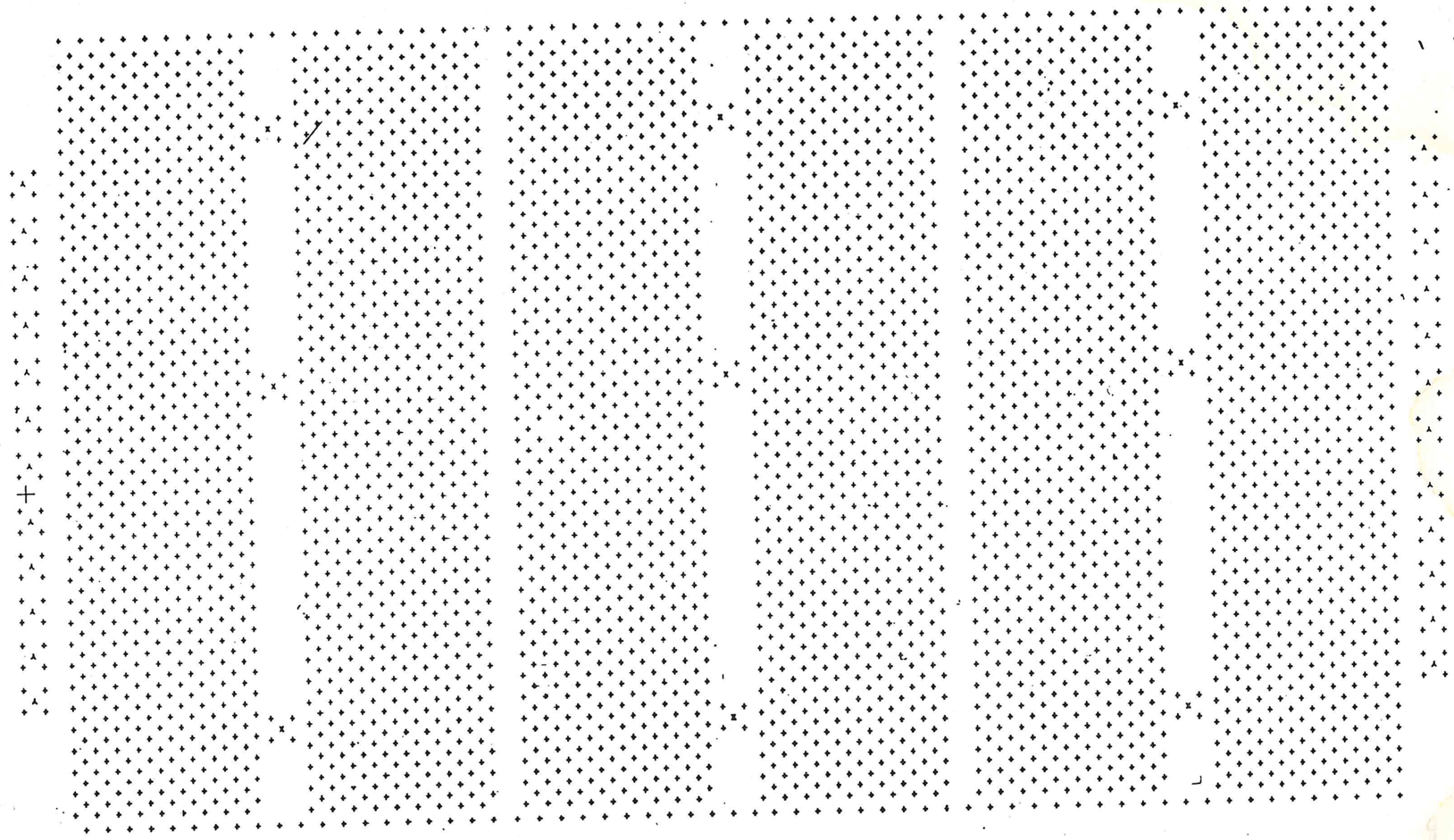

REVISIONS		
ECN	DRAWING NO.	REV

TITLE BACKPANEL CPU #2

SCALE 2/1 SHEET 5 OF 5

DESIGNER E UA

NUMBER 5410680-0-0

DIST.

REV. A

~~1. CUT ITEM #3 TO LENGTH GIVEN IN DETAIL A. GROUND PLANE PROTECTION SHEETS SHOULD BE TACKED TO EITHER AS SHOWN WITH (TBM #4) 3 PLACES.~~
2. BEFORE ASSY OF ITEM #4 (BOARD) REWORK PER D-UA-5410681-0-0.
3 FOR ASSY AID REFER TO PROCESS SHEET A-SP-KL10-3P5

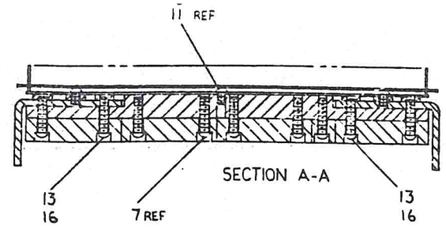

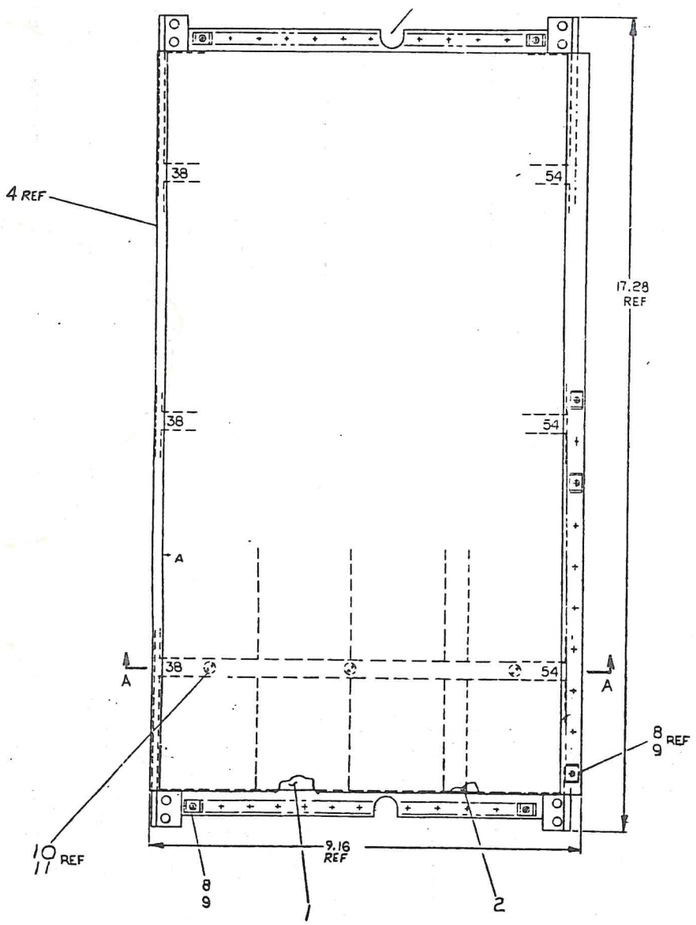

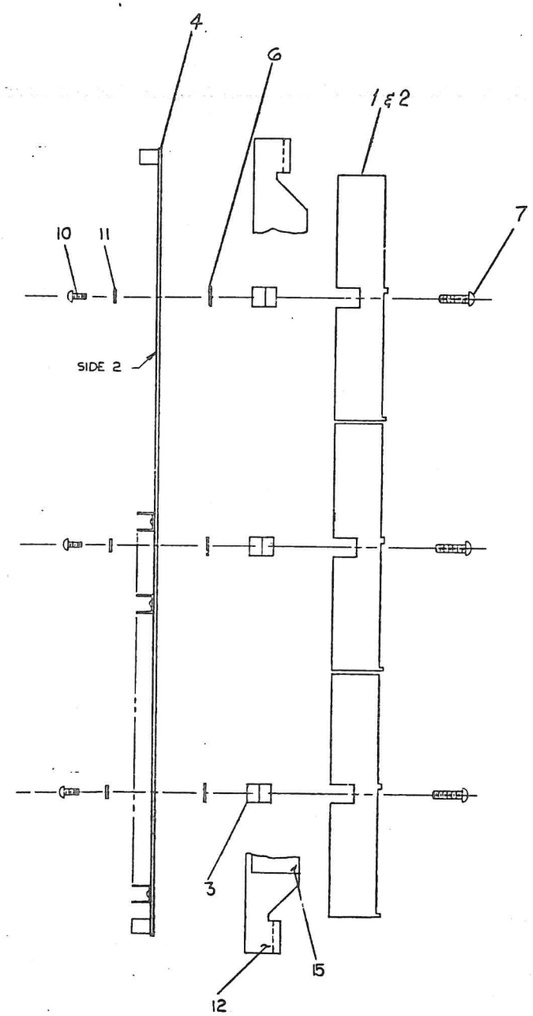

QTY.	DESCRIPTION	PART NO.	ITEM NO.
12	WASHER, LOCK #8	9006690	16
1	LABEL, ADHESIVE BACK	9009255	15
~~AR~~	~~TAPE, TRANSPARENT 25M~~	~~9005347~~	~~14~~
12	SCR, FHL FIL HD #8-32 x .81	9009664-6	13
2	BRACKET LOGIC FRAME	D-IA-7412900-0-0	12
9	WASHER, LOCK INT TOOTH #6	9006633	11
9	SCR, SLOTTED BIND HD #6-32 x .31	9006021-4	10
34	FASTON TAB	9007113	9
34	EYELET	9009000-00	8
37	SCR, FIL HD POZI DRIVE #8-32 x .62	9006120-8	7
3	SPACER, BACK PLANE	C-ID-7411399-2-0	6
~~3~~	~~BACK PLANE STIFFENER ASSY~~	~~D-IA-8011786-0-0~~	~~5~~
1	ETCH CIRCUIT BOARD	5010660	4
3	BAR, BACK PLANE (CPU)	C-ID-7411944-0-0	3
3	CONN BLOCK, 72 PIN	D-PS-1211425-0-0	2
12	288 PIN CONN BLOCK (4863)	E-SC-1210258-01	1

PARTS LIST

FIRST USED ON CPT/MOD
KL10

UNLESS OTHERWISE SPECIFIED
DIMENSIONS IN INCHES
TOLERANCES
DECIMALS ± .005 FRACTIONS ± 1/64 ANGLES ± 0°30'
FINAL SURFACE QUALITY ✓
REMOVE BURRS AND BREAK SHARP CORNERS

MATERIAL
SEE PARTS LIST
FINISH

DWN
CHKD
ENGR
PROJ ENG
PROD
NEXT HIGHER ASSY
E-AD-7009438-0-0
SCALE 1/1
SHEET 1 OF 1

DATE

digital EQUIPMENT CORPORATION
MAYNARD, MASSACHUSETTS

TITLE
CPU #3
BACK PLANE ASSY

SIZE E CODE AD NUMBER 7009416-0-0 REV. 0
DIST.

REVISIONS

CHG	CHANGE NO.	REV.
	7009416-00001	A
	7009416-00002	C
	7009416-00003	D

D. CHIN

"THIS DRAWING AND SPECIFICATIONS, HEREIN, ARE THE PROPERTY OF DIGITAL EQUIPMENT CORPORATION AND SHALL NOT BE REPRODUCED OR COPIED OR USED IN WHOLE OR IN PART AS THE BASIS FOR THE MANUFACTURE OR SALE OF ITEMS WITHOUT WRITTEN PERMISSION. COPYRIGHT © 1976 DIGITAL EQUIPMENT CORPORATION"

NOTES:

1. FOR DRAWING DIRECTORY REFER TO: B-DD-5410681-0.
2. CAUTION SHEETS 2 THRU 5 ARE "E" SIZE.

QTY	REF. DESIGNATION	DESCRIPTION	PART NO.	ITEM NO.
1		ETCHED CIRCUIT BOARD	5010660	1
34		TAB DOUBLE	9007113	2
34		EYELET	9006732	3

PARTS LIST

FIRST USED ON OPTION MODEL: KL10

ETCH BOARD REV.

IC TYPE	GND	+5V

GND AND 5V ARE USUALLY PIN 7 AND 14 RESPECTIVELY EXCEPTIONS ARE STATED ABOVE

IC PIN LOCATIONS

ORIG	CHANGE NO.	REV.
CHK	REVISIONS	

DEC NO.	EIA NO.	DEC NO.	EIA NO.

SEMICONDUCTOR CONVERSION CHART

DRN. J.P. Passarelli DATE 17-SEP-76
CHK'D. [illegible] DATE 27-OCT-77
ENG. [illegible] DATE 28-OCT-77
PROJ. ENG. [illegible] DATE 23-FEB-77
PROD. W. Conley DATE 23-FEB-77

NEXT HIGHER ASSY: B-DD-5410681-0

SCALE —

SHEET 1 OF 5

digital

TITLE: BACKPANEL CPU #3

SIZE D | CODE UA | NUMBER 5410681-0-0 | REV. A

DIST.

DUA5410681-0-0 REV. A

digital
TITLE BACKPANEL CPU #3
SIZE
E
CODE
UA
54106BI-0
SIGNATURES
DATE
DWN.
CHK.
ENG.
PROD. ENG.
PROD.
SCALE
SHT. 2 OF 3
NEXT HIGHER ASSY. B-DD-54106BI-0
ETCH REV. 0-P2
P.C. DESIGN DATA BASE REV. 0-P2
CHG CHANGE NO. REV
A
NOTES:
E UA 54106BI-0 0 A

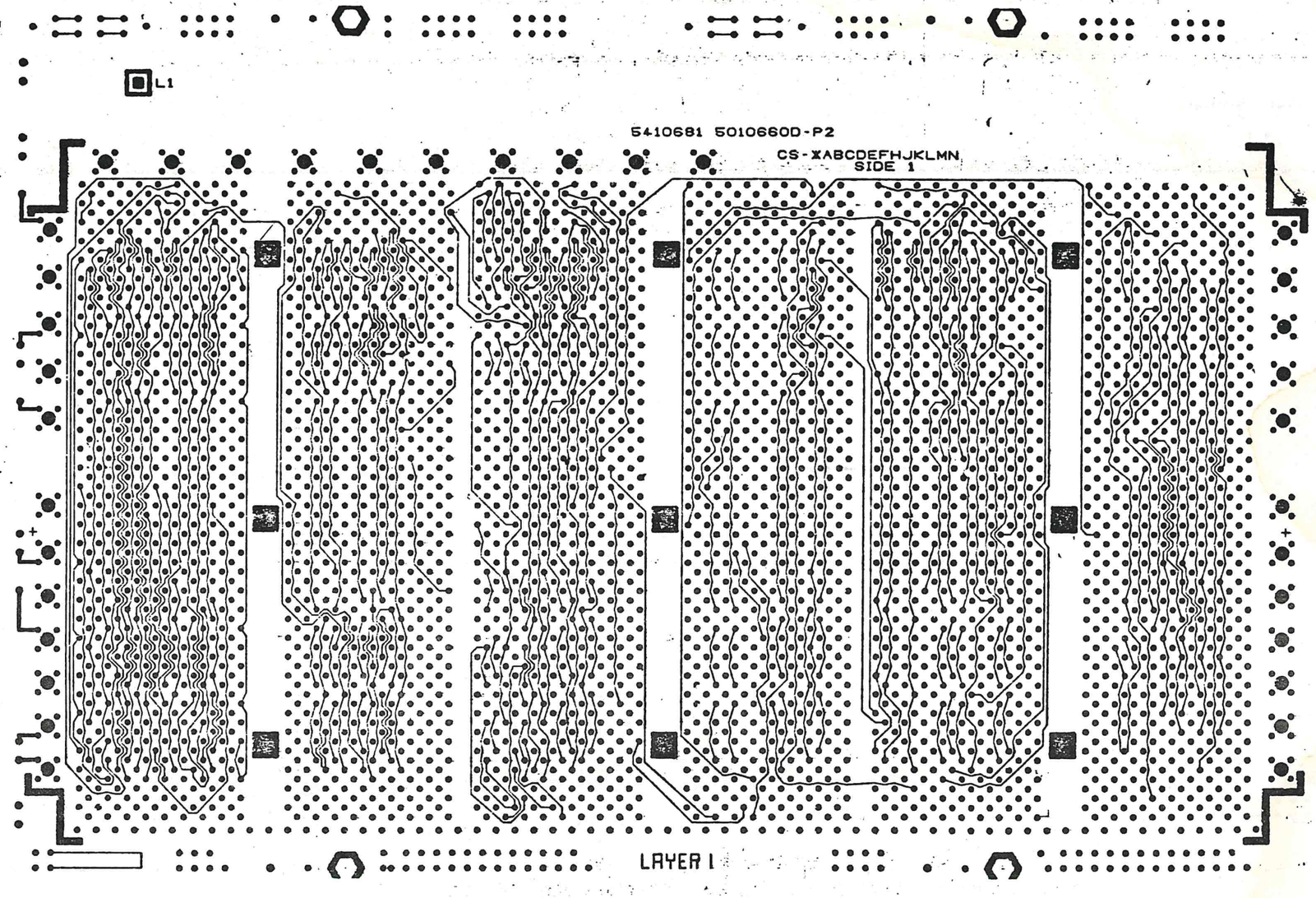

TITLE BACKPLANE CPU #3

SCALE 2/1 SHEET 3 OF 5

E LA 5410681-0-0 REV. A

DCT.

5410681-0-0 A

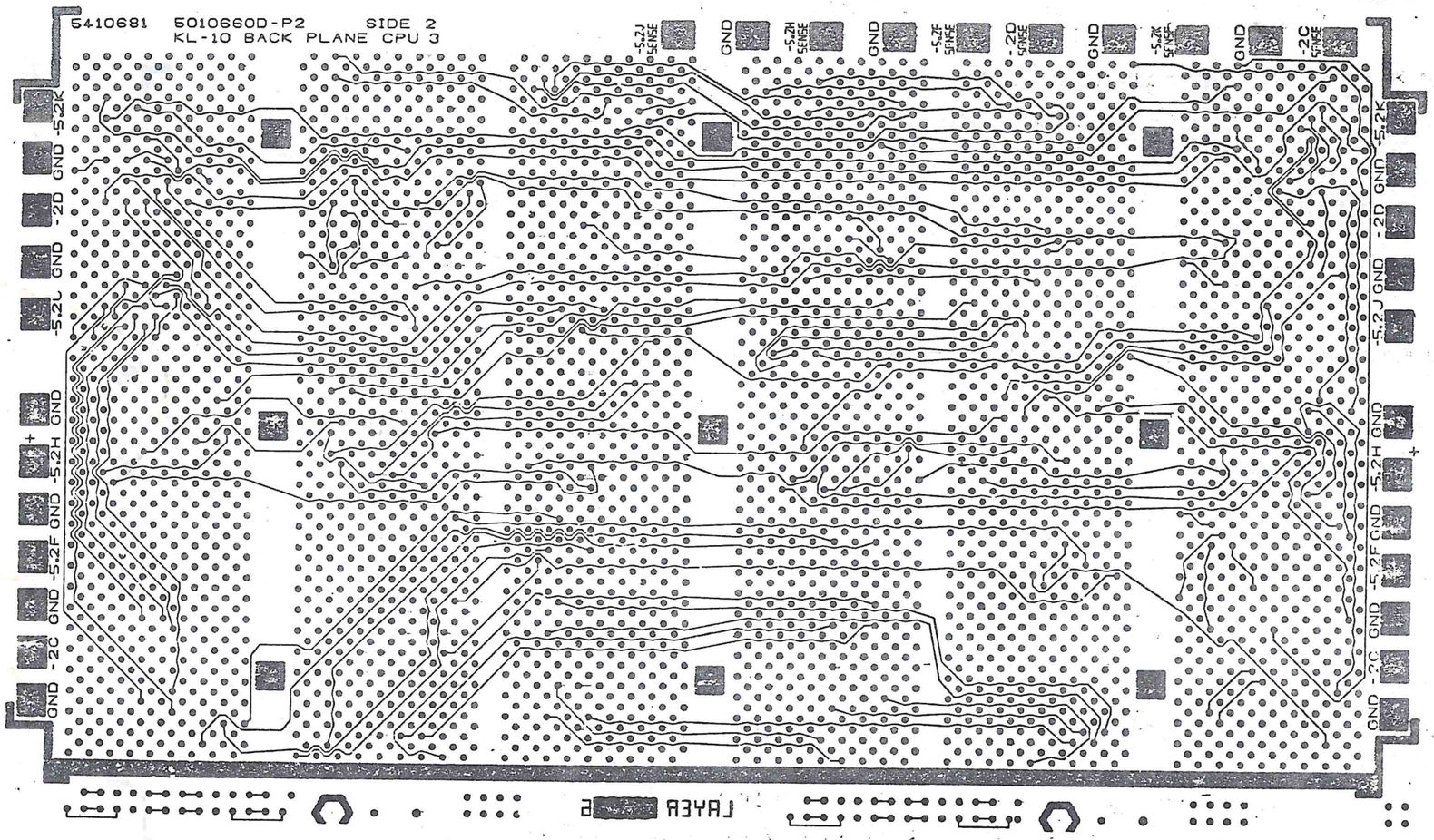

REVISIONS		
ZONE	CHANGE NO.	REV.

TITLE BACKPANEL CPU #3

SIZE E | CODE | NUMBER LA 5410681-0-0 | REV. A

SCALE 2/1 | SHEET 4 OF 5

LA5410681-0-0

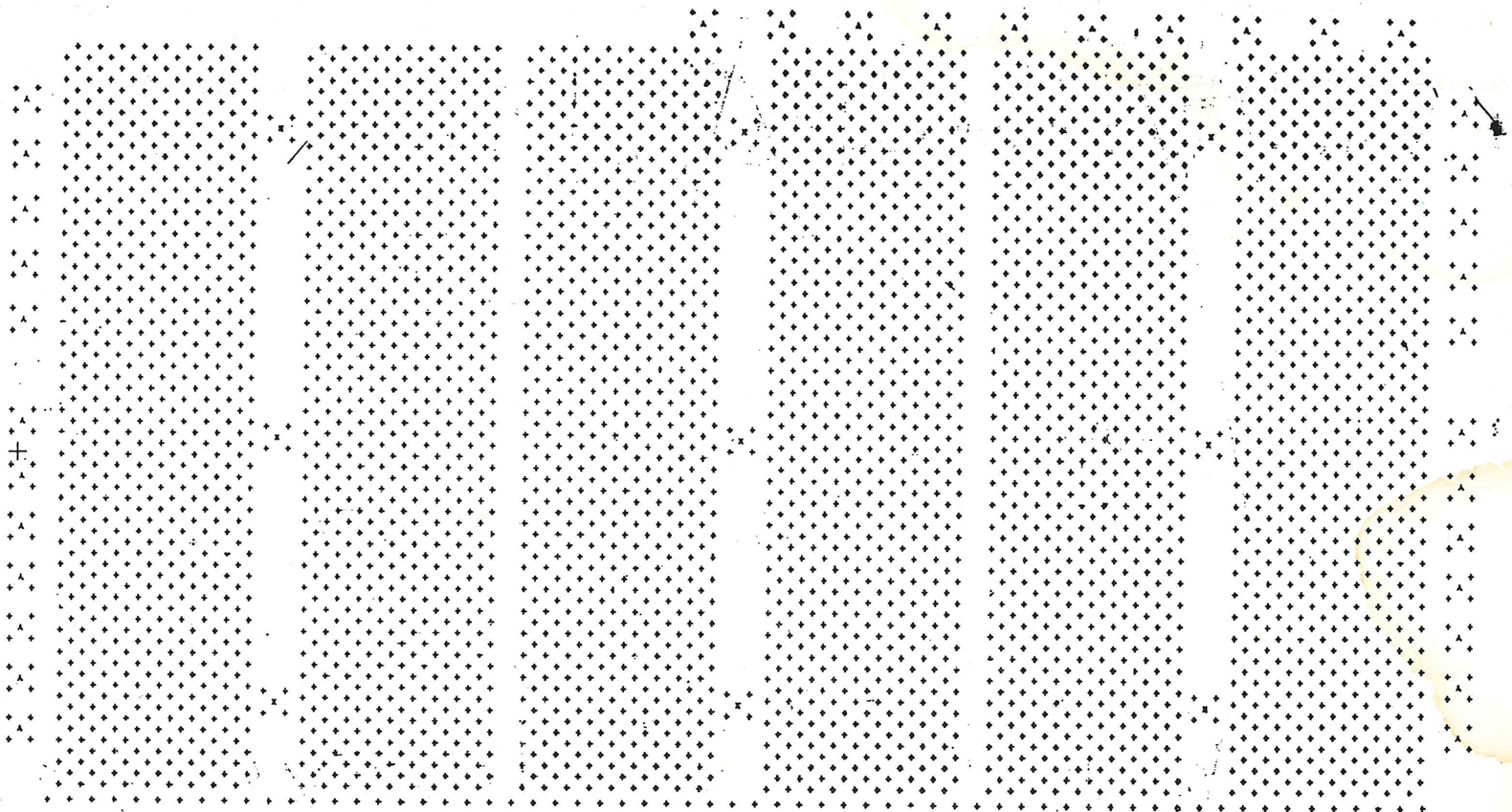

TITLE BACKPANEL CPU#3	E	UA 5410681-0-0	REV. A
SCALE 2/1	SHEET 5 OF 5	UNIT	

UA5410681-0-0 A