" THE MATERIAL HEREIN IS FOR INFORMATION PURPOSES ONLY AND IS SUBJECT TO CHANGE WITHOUT NOTICE. DIGITAL EQUIPMENT CORPORATION ASSUMES NO RESPONSIBILITY FOR ANY ERRORS WHICH MAY APPEAR HEREIN."

FIELD MAINTENANCE PRINT SET

" THIS DRAWING AND SPECIFICATIONS, HEREIN, ARE THE PROPERTY OF DIGITAL EQUIPMENT CORPORATION AND SHALL NOT BE REPRODUCED OR COPIED OR USED IN WHOLE OR IN PART AS THE BASIS FOR THE MANUFACTURE OR SALE OF ITEMS WITHOUT WRITTEN PERMISSION." COPYRIGHT © 1983 DIGITAL EQUIPMENT CORPORATION.

TABLE OF CONTENTS

UNIT VARIATIONS COVERED BY THIS PRINT SET
KL10-RA
KL10-RC
KL10-RE

KL10-R
FIELD MAINTENANCE PRINT SET

DIGITAL EQUIPMENT CORPORATION

PRINT SET PART NUMBER MP01708-00

REVISION HISTORY

REV.	ECO NUMBER	DATE
A	INITIAL	

DRN. J. Huson	DATE 19 SEP 83	TITLE digital
CHK'D J. Huson	DATE 19 SEP 83	KL10-R PROCESSOR
DES. ENG. R.SCOTT	DATE 19 SEP 83	
RESP. ENG. R.SCOTT	DATE 19 SEP 83	
FIELD SERVICE J.SWEENEY	DATE 19 SEP 83	
TOP DOC. B-TC-KL10-R-DBU		

SIZE	CODE	NUMBER	REV.
B	TC	KL10-R-DBU	A

SHEET 1 OF 2

MRO

SIZE B | CODE TC | NUMBER KL10-R-DBU | REV. A

DRAWING NUMBER	REV	DESCRIPTION
B-TC-KL10-R-DBU	A	KL10-R PRINT SET
E-UA-KL10-R-0	A	KL10-R PROCESSOR ASSEMBLY
K-PL-KL10-R-DBP	A	KL10-R PROCESSOR PARTS LIST
D-IC-KL10-0-1	*	POWER DIAGRAM
D-IC-KL10-0-2	*	REGULATOR ASSEMBLY
C-MU-KL10-0-RHDT	*	RH/DTE MODULE UTILIZATION
C-MU-KL10-0-CPU	A	KL10-PV MODULE UTILIZATION
E-AD-7020327-0-0	A	FRONT END CAB ASSEMBLY
K-PL-7020327-0-DBP	A	FRONT END CAB PARTS LIST
E-AD-7020325-0-0	A	I/O CAB ASSEMBLY
K-PL-7020325-0-DBP	A	I/O CAB PARTS LIST
E-AD-7020326-0-0	A	CPU CAB ASSEMBLY
K-PL-7020326-0-DBP	A	CPU CAB PARTS LIST
E-UA-H760-0-0	J	RAW POWER SUPPLY H760
K-PL-H760-0-DBP	J	RAW POWER SUPPLY PARTS LIST
D-CS-H760A-0-1	B	CIRCUIT SCHEMATIC H760A
E-AD-7009409-0-0	C	DIODE HEAT SINK ASSEMBLY
D-AD-7009410-0-0	D	COMPONENT MTG PLATE ASSEMBLY
D-IC-H761-0-8	A	H761 WIRING DIAGRAM
E-UA-H761-0-0	K	REGULATED POWER SUPPLY
K-PL-H761-0-DBP	K	REGULATED POWER SUPPLY PARTS LIST
D-IC-H761-0-1	A	CONTROL LOGIC
D-CS-G8010-0-1	C	-5.2 VOLT CONTROL
D-CS-G8011-0-1	C	-2 VOLT CONTROL
D-CS-G8013-0-1	B	+10 VOLT REFERENCES
D-CS-G8014-0-1	B	LOW VOLTAGE DETECTOR
D-CS-5410663-0-1	B	SERIES PASS -2.0 VOLT BOARD
D-CS-5410665-0-1	B	-5.2 VOLT BOARD
E-AD-7009404-0-0	F	REGULATED HEAT SINK ASSY -2.0 VOLT
K-PL-7009404-0-DBP	F	REGULATED HEAT SINK PARTS LIST
E-AD-7009405-0-0	F	REGULATED HEAT SINK ASSY -5.2
K-PL-7009405-0-DBP	F	REGULATED HEAT SINK PARTS LIST
D-CS-7009404-0-1	*	-2.0 VOLT HEAT SINK ASSEMBLY
D-CS-7009405-0-1	*	-5.2 VOLT HEAT SINK ASSEMBLY
E-IA-7009545-0-0	*	HARNESS DRIVE SCR SCR RTN
D-IA-7009546-0-0	*	HARNESS SENSE
E-IA-7009547-0-0	A	HARNESS OPEN SENSE
E-UA-863-0-0	K	POWER CONTROLLER 863
K-PL-863-0-DBP	K	POWER CONTROLLER PARTS LIST
D-CS-863-0-1	F	CIRCUIT SCHEMATIC 863
D-CS-W516-0-1	D	AC LOW VOLTAGE DETECTOR
D-CS-W7000-0-1	C	AUX POWER SUPPLY
C-AD-7009632-0-0	C	WIRED ASSY, CHASSIS 863 P.C.
K-PL-7009878-0-DBP	E	CAPACITOR BOX ASSY PARTS LIST
E-AD-7009879-0-0	E	CAPACITOR BOX ASSEMBLY
E-UA-861-D	K	POWER CONTROLLER
E-AD-7020310-0-0	A	SWITCH PANEL ASSEMBLY
K-PL-7020310-0-DBP	A	SWITCH PANEL PARTS LIST

DRAWING NUMBER	REV	DESCRIPTION
D-AD-7009876-0-0	A	VANE SWITCH ASSEMBLY
E-AD-7020381-0-0	A	LOGIC ASSEMBLY RH20/DTE20
K-PL-7020381-0-DBP	A	LOGIC ASSEMBLY RH20/DTE20 P.L.
E-AD-7009429-0-0	F	WIRED ASSEMBLY RH20/DTE20
A-PL-7009429-0-0	F	WIRED ASSEMBLY RH20/DTE20 P.L.
D-AD-7010103-0-0	C	SWITCH ASSY
D-UA-5411360-0-0	*	SWITCH BOARD SH 1-2
D-IA-7011520-0-0	*	VANE SWITCH ASSEMBLY
C-IA-7008288-0-0	J	CABLE ASSEMBLY
D-UA-BC06R-0-0	F	BC06R I/O CABLE
D-IA-7020715-0-0	A	CABLE PRIMARY POWER 60 Hz
B-PL-KL10-R-SH	A	SHIP LIST KL10-R
D-AD-7018288-0-0	B	VOLTAGE MONITOR ASSY I/O #1
K-PL-7018288-0-DBP	B	VOLTAGE MONITOR ASSY I/O #1 P.L.
D-UA-5414506-1-0	A	VOLTAGE MONITOR BOARD
K-PL-5414506-1-DBP	A	VOLTAGE MONITOR BOARD P.L.
D-CS-5414506-1-1	A	VOLTAGE MONITOR BOARD
A-SP-5414506-1-2	A	VOLTAGE MONITOR
E-AD-7016018-0-0	B	CARD CAGE ASSEMBLY
K-PL-7016018-0-DBP	B	CARD CAGE ASSEMBLY P.L.
MP00622	H	MF20 PRINT SET FOR REF ONLY
B-DD-KL10-R	A	KL10-R PROCESSOR D.D FOR REF ONLY
EK-OKL10-MP-001	*	KL10 BLOCK DIAGRAMS FOR REF ONLY
MP00301	A	KL10-PV PRINT SET FOR REF ONLY

TITLE:	SHEET	SIZE	CODE	NUMBER	REV.
KL10-R PROCESSOR	2 OF 2	B	TC	KL10-R-DBU	A

MRO

THIS DRAWING AND SPECIFICATIONS, HEREIN, ARE THE PROPERTY OF DIGITAL EQUIPMENT CORPORATION AND SHALL NOT BE REPRODUCED OR COPIED OR USED IN WHOLE OR IN PART AS THE BASIS FOR THE MANUFACTURE OR SALE OF ITEMS WITHOUT WRITTEN PERMISSION.
COPYRIGHT © 1983 DIGITAL EQUIPMENT CORPORATION

LEGEND

PART NO.	VARIATION	REV
KL10-RA	60 HZ ORANGE	A1
KL10-RC	60HZ BLUE	A1
KL10-RE	60HZ BLUE NO MEM	A1

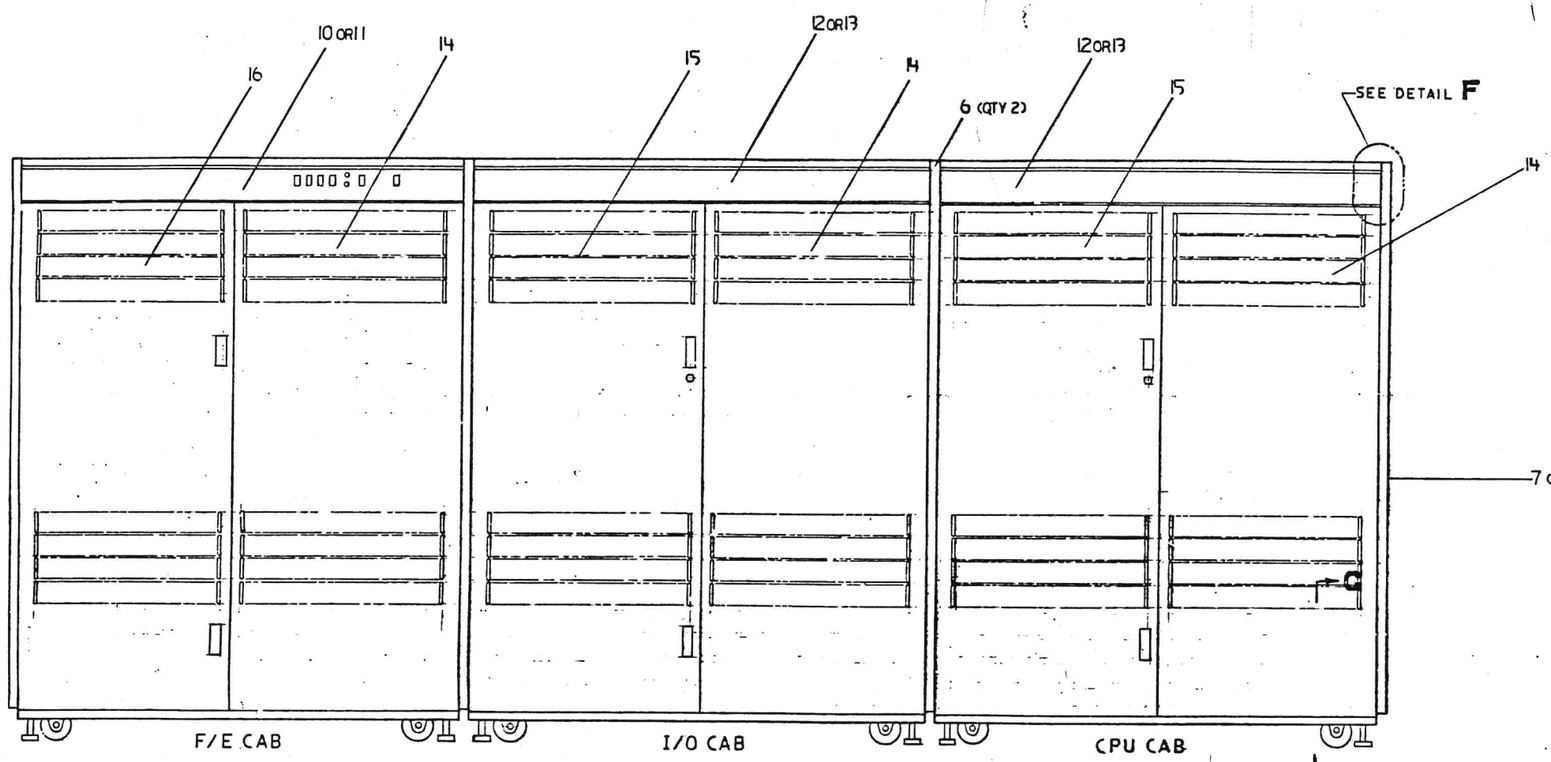

FRONT VIEW

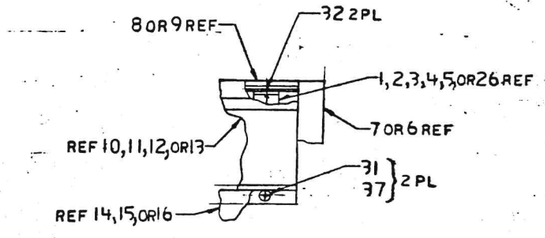

DETAIL F
SCALE: 1/2
TYP 3 PL

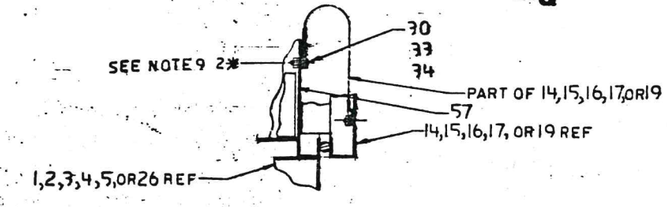

SECT G-G
SCALE: 1/2
TYP 9 PL

NOTES:

1. THIS DOCUMENT DESCRIBES COMPLETELY THE MECHANICAL ASSEMBLY OF THE KL10-R. FOR ANY ELECTRONIC, LOGIC OR SCHEMATIC INFORMATION SEE THE FOLLOWING FIELD MAINTAINENCE PRINT SETS:
   MP00622 MF20 MOS MEMORY
   MP01708 KL10-R PROCESSOR UNIT
   MP00301 KL10-PV EXTENDED ADDRESSING CPU
2. ITEM 38 (DIB20) IS STANDARD ON THE KL10-RE ONLY. FOR INSTALLATION INFORMATION SEE PRINT SET MP00528
3. TO INSTALL A CARD READER CABLE REMOVE THIS PLATE, PASS CABLE THROUGH CUT-OUT AND REPLACE PLATE
4. IF A SECOND DC20F-AD IS INSTALLED HERE REMOVE PLATES AND DISCARD
5. KL10-RE ONLY INSTALL (2) BC20C-6C CABLES (ITEM 46) FROM CPU SLOT AB03 TO DIB20 SLOT AB01 AND FROM CPU SLOT CD03 TO DIB20 SLOT CD01.
6. IF A DN20-XX IS INSTALLED WITH THE KL10-R THE I/O PLATES SUPPLIED WITH THE KL10-R ARE USED. IF A DN20F-XX IS INSTALLED REMOVE THE PANEL AND INSTALL THE SIMILAR PANEL SUPPLIED WITH DN20F-XX
7. WHEN INSTALLING A MASSBUS CABLE TO AN RH20 REMOVE THE MASSBUS CLAMP AND INSTALL CABLE REPLACING MASSBUS CLAMP SECURELY AROUND CABLE.
8. WHEN SERVICING DRAWERS REMOVE SHIPPING BRACKETS. REPLACE BRACKETS WHEN COMPLETED
9. * DENOTES HOLE NUMBER. BOTTOM HOLE IS HOLE NO. 0
10. FOR INSTALLATION OF RH20'S OR DTE 20'S SEE DRAWING D-MU-KL10-0-RHDT. FOR INSTALLATION OF ANY CPU (KL10-PV) MODULES SEE DRAWING D-MU-KL10-0-CPU
11. FOR KL10-RA, KL10-RC REMOVE (2) M8519 IN SLOTS 7 AND 8 OF CPU BACKPLANE (KL10-PV) AND REPLACE WITH (2) M8580 (ITEM 42)
12. WHEN INSTALLING DIB20 (ITEM 38) FOLLOW PRINTS SPECIFIED IN NOTE 2 WITH THE EXCEPTION OF THE MOUNTING HOLES FOR THE BRACKET, POWER CONNECTOR (7005868). MOUNT THIS IN HOLES 21 AND 24 RATHER THAN 11 AND 14.
13. INSTALL ITEM 58 (TERMINATOR ASSY) IN UNUSED PORT OF RP06.
14. REMOVE AND DISCARD GND STRAP FROM TWO END PANELS (ITEM 7)

CAUTION: OFF SHEET PARTS LIST EXISTS. SEE K-PL-KL10-R-DBP.

	DESCRIPTION	DRAWING NO.	PART NO.

UNLESS OTHERWISE SPECIFIED DIMENSIONS ARE IN INCHES AND THE FOLLOWING TOLERANCES APPLY (PER DEC STD 111)

INCHES TOLERANCES	ANGLES ± 0° 30'	APPLICABLE DIMENSION RANGE	DIMENSION RANGE IN INCHES
X = ± .1	SURFACE QUALITY	OVER 0 TO 3.0	OVER 3.0 TO 12.0
XX = ± .05		OVER 3.0	OVER 12.0 TO 48.0
XXX = ± .030	MICROINCHES		OVER 48.0

QUANTITY & VARIATION

THIRD ANGLE PROJECTION

DO NOT SCALE DRAWING

REMOVE BURRS AND BREAK SHARP CORNERS

MATERIAL: SEE PARTS LIST

DRAWN	H. Lee	DATE 17 MAY 83
CHECKED	R. Scott	DATE 13 SEPT 83
ENGR APPR		DATE 15 SEPT 83
MFG APPR		DATE 15 SEPT 83

digital

TITLE: KL10-R PROCESSOR UNIT

DOCUMENT NUMBER

CODE | NUMBER | REV

REVISION HISTORY

ECO #	DESCRIPTION	DATE	APPROVED

THIS DRAWING AND SPECIFICATIONS, HEREIN, ARE THE PROPERTY OF DIGITAL EQUIPMENT CORPORATION, AND SHALL NOT BE REPRODUCED OR COPIED OR USED IN WHOLE OR IN PART AS THE BASIS FOR THE MANUFACTURE OR SALE OF ITEMS WITHOUT WRITTEN PERMISSION.
COPYRIGHT © 1973 DIGITAL EQUIPMENT CORPORATION

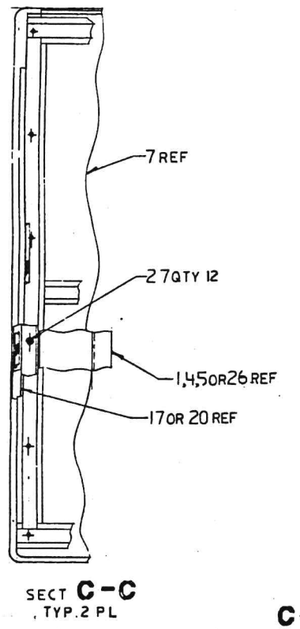

SECT **C-C**
TYP. 2 PL

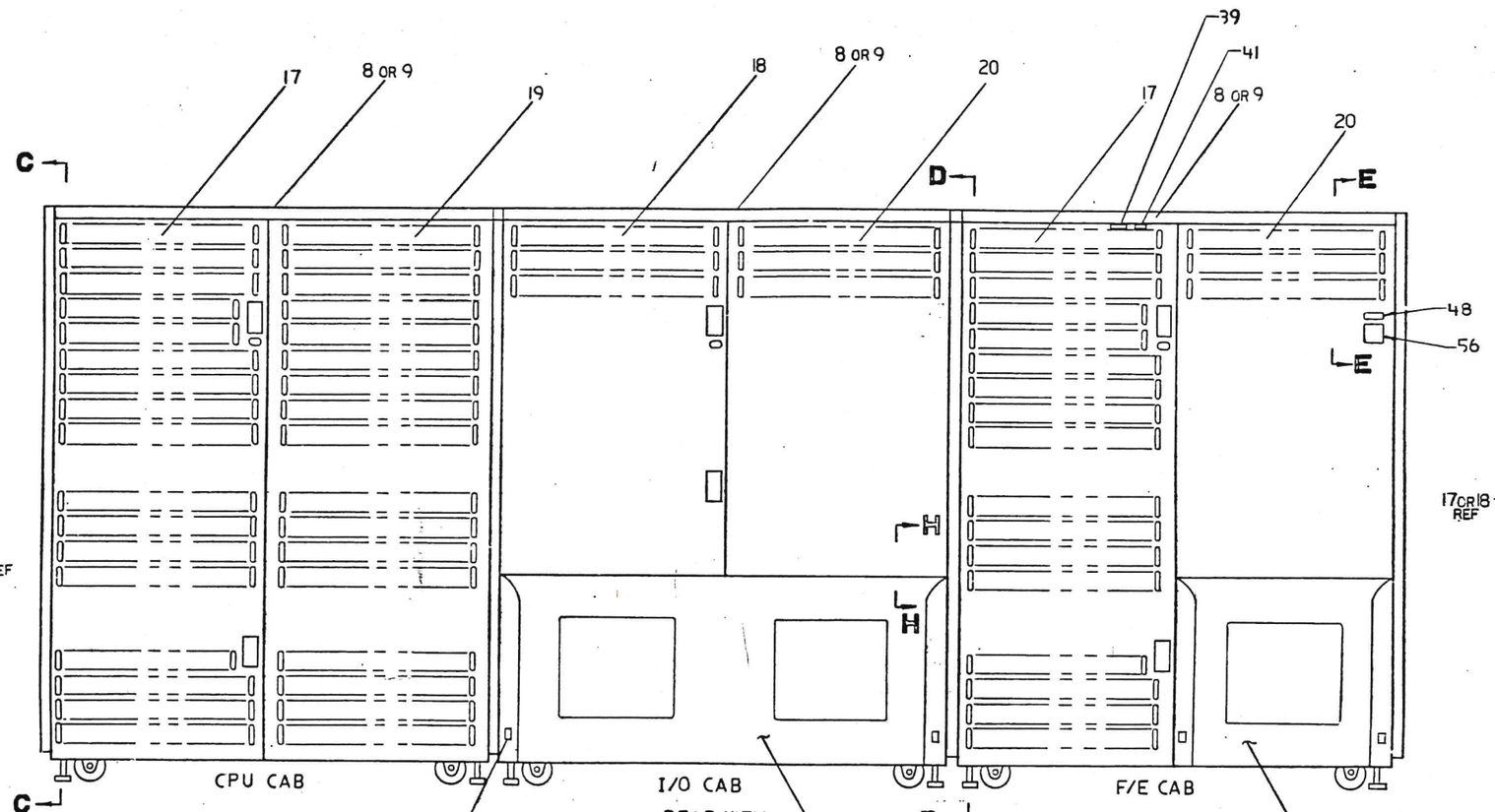

REAR VIEW

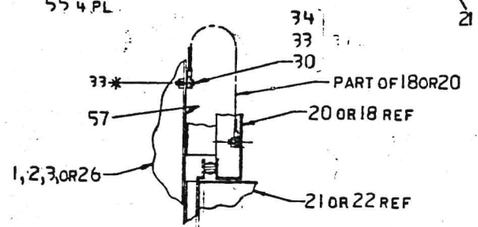

SECT **H-H**
SCALE: 1/2
TYPICAL 3 PL

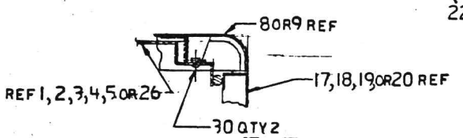

SECT **E-E**
SCALE: 1/2
TYPICAL 3 PL

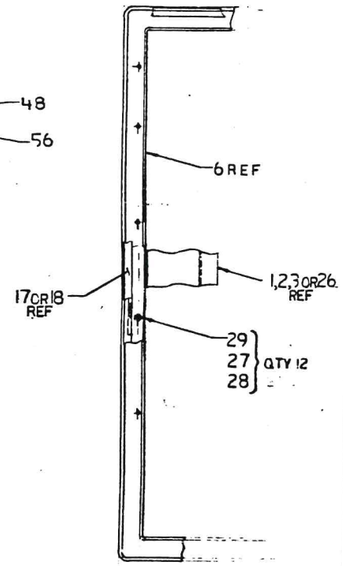

SECT **D-D**
TYP 2 PL

REVISION HISTORY		
DATE	ECO NUMBER	REV.

TITLE

DOCUMENT NUMBER

THIS DRAWING AND SPECIFICATIONS, HEREIN, ARE THE PROPERTY OF DIGITAL EQUIPMENT CORPORATION AND SHALL NOT BE REPRODUCED OR COPIED OR USED IN WHOLE OR IN PART AS THE BASIS FOR THE MANUFACTURE OR SALE OF ITEMS WITHOUT WRITTEN PERMISSION.
COPYRIGHT © 1971 DIGITAL EQUIPMENT CORPORATION

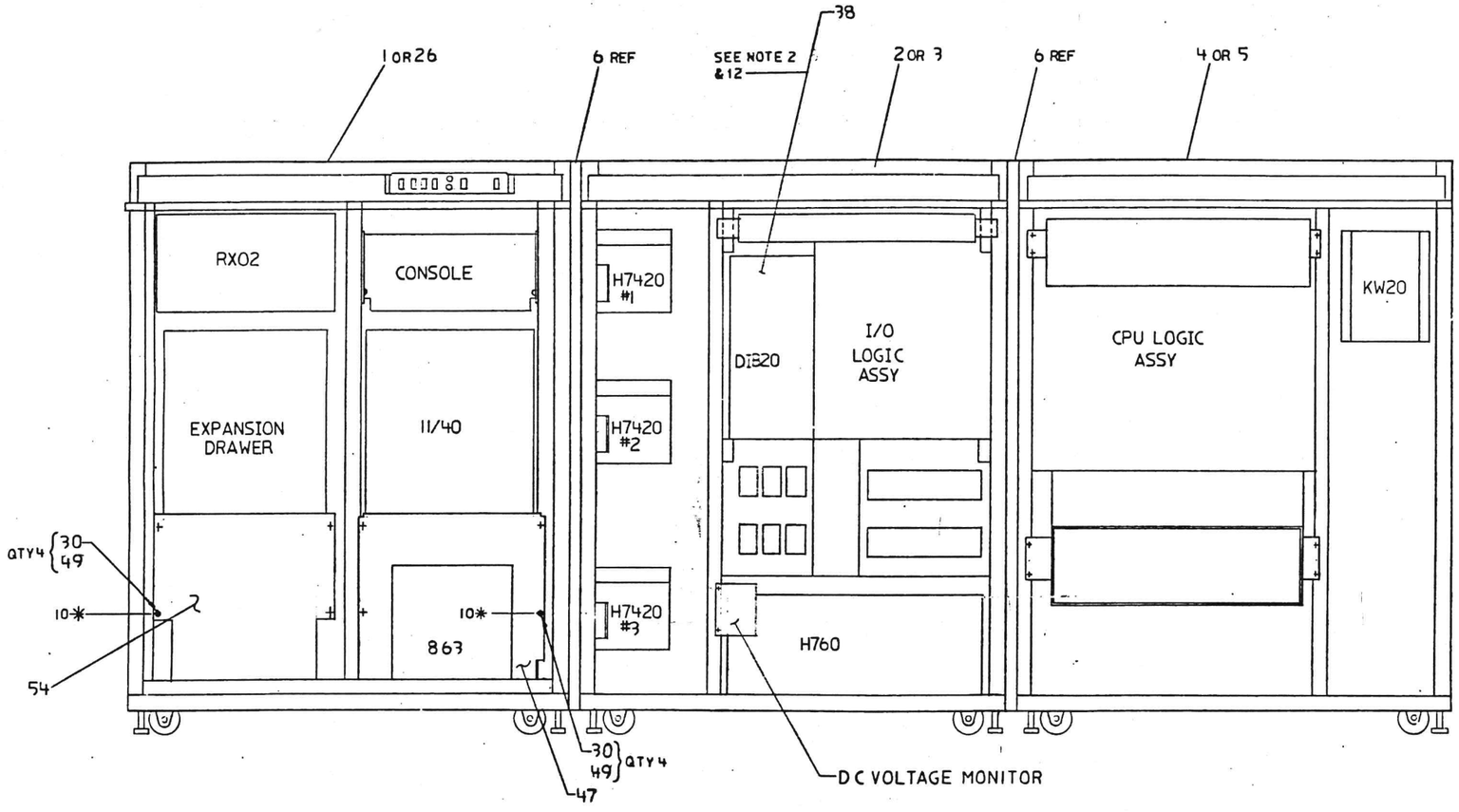

FRONT VIEW
(SKINS REMOVED)

REVISION HISTORY		
DATE	ECO NUMBER	REV

TITLE

DOCUMENT NUMBER

THESE DRAWINGS ARE THE PROPERTY OF DIGITAL EQUIPMENT CORPORATION AND SHALL NOT BE REPRODUCED OR COPIED OR USED IN WHOLE OR IN PART AS THE BASIS FOR THE MANUFACTURE OF SALE OF THIS OR ANY OTHER APPARATUS WITHOUT WRITTEN PERMISSION.
COPYRIGHT © 1982 DIGITAL EQUIPMENT CORPORATION

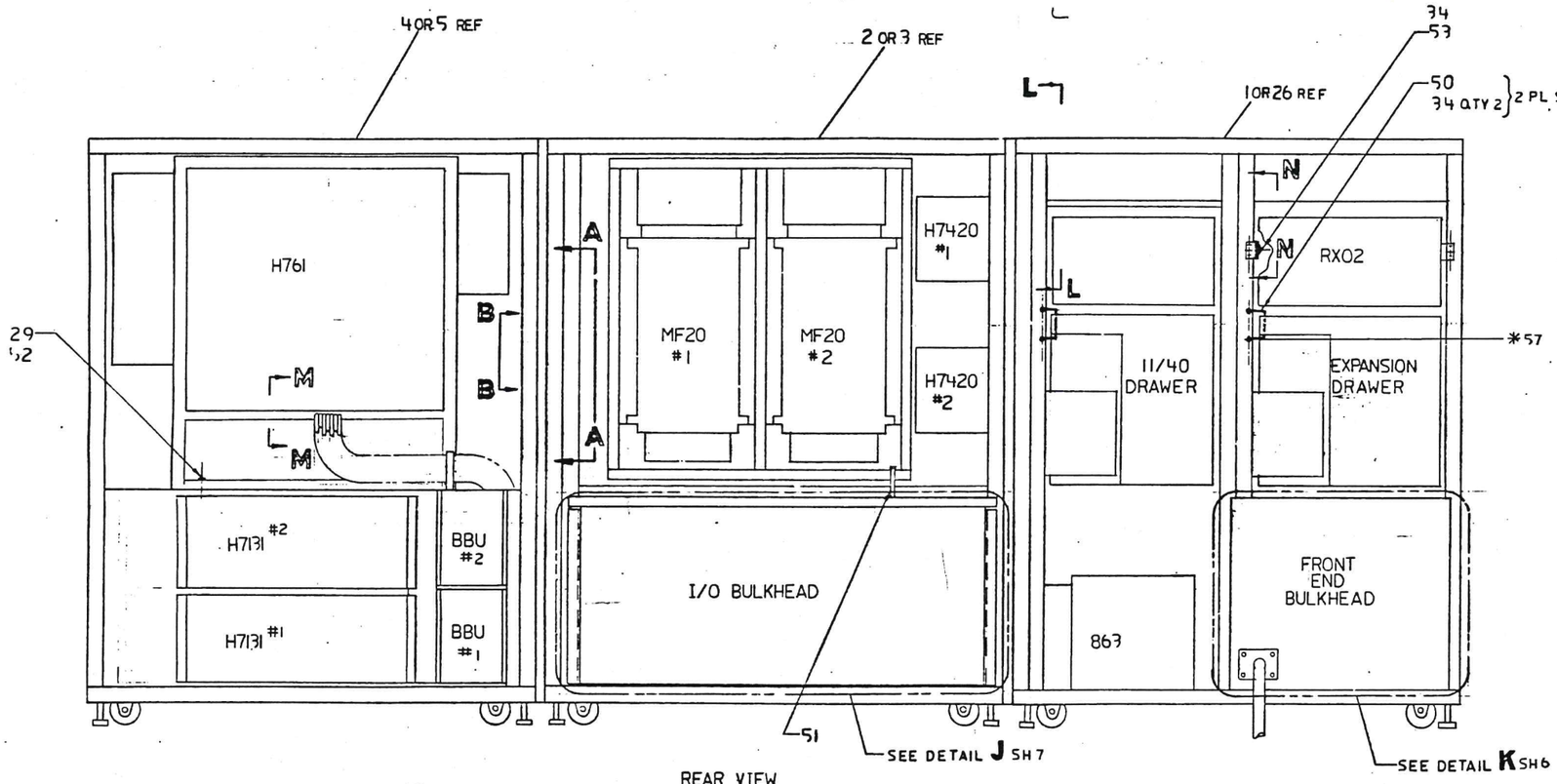

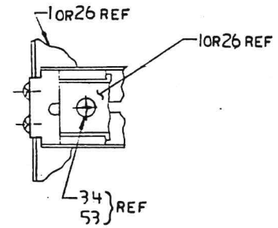

SECT N-N
SCALE: 1/1

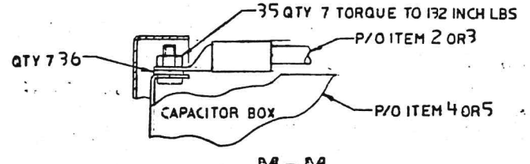

SECTION M-M
SCALE: NONE

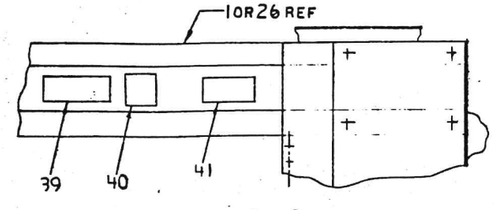

SECT L-L
SCALE: NONE

REVISION HISTORY		
DATE	ECO NUMBER	REV.

DOCUMENT NUMBER		
SIZE	CODE	NUMBER
E	UA	KLO-R-0

REV. A

TITLE
KLIO-R UNIT ASSY

PROPERTY OF DIGITAL EQUIPMENT CORPORATION. THIS SHALL NOT BE REPRODUCED OR PUBLISHED IN WHOLE OR IN PART AS THE BASIS FOR THE MANUFACTURE OR SALE OF ITEMS WITHOUT WRITTEN PERMISSION.
COPYRIGHT © 1977 DIGITAL EQUIPMENT CORPORATION

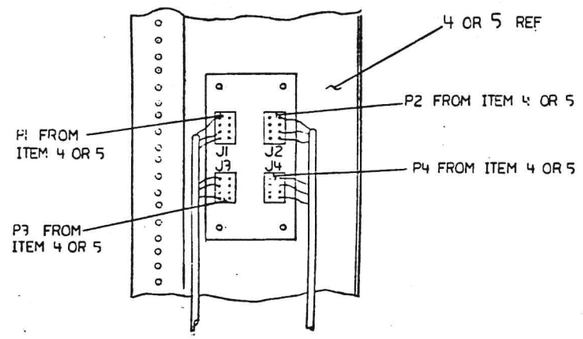

VIEW **B-B** SH 4

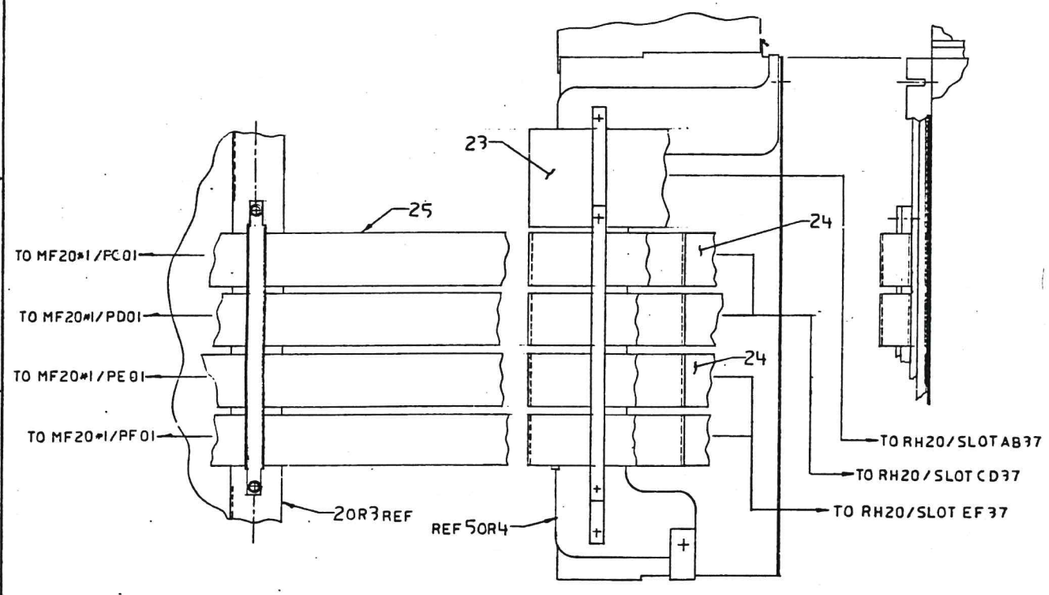

VIEW **A-A** SH 4

REVISION HISTORY		
DATE	ECO NUMBER	REV

TITLE: KL10-B UNIT ASSY	SIZE: E	CODE: 1-1	DOCUMENT NUMBER: KL10-B-0
			REV: A

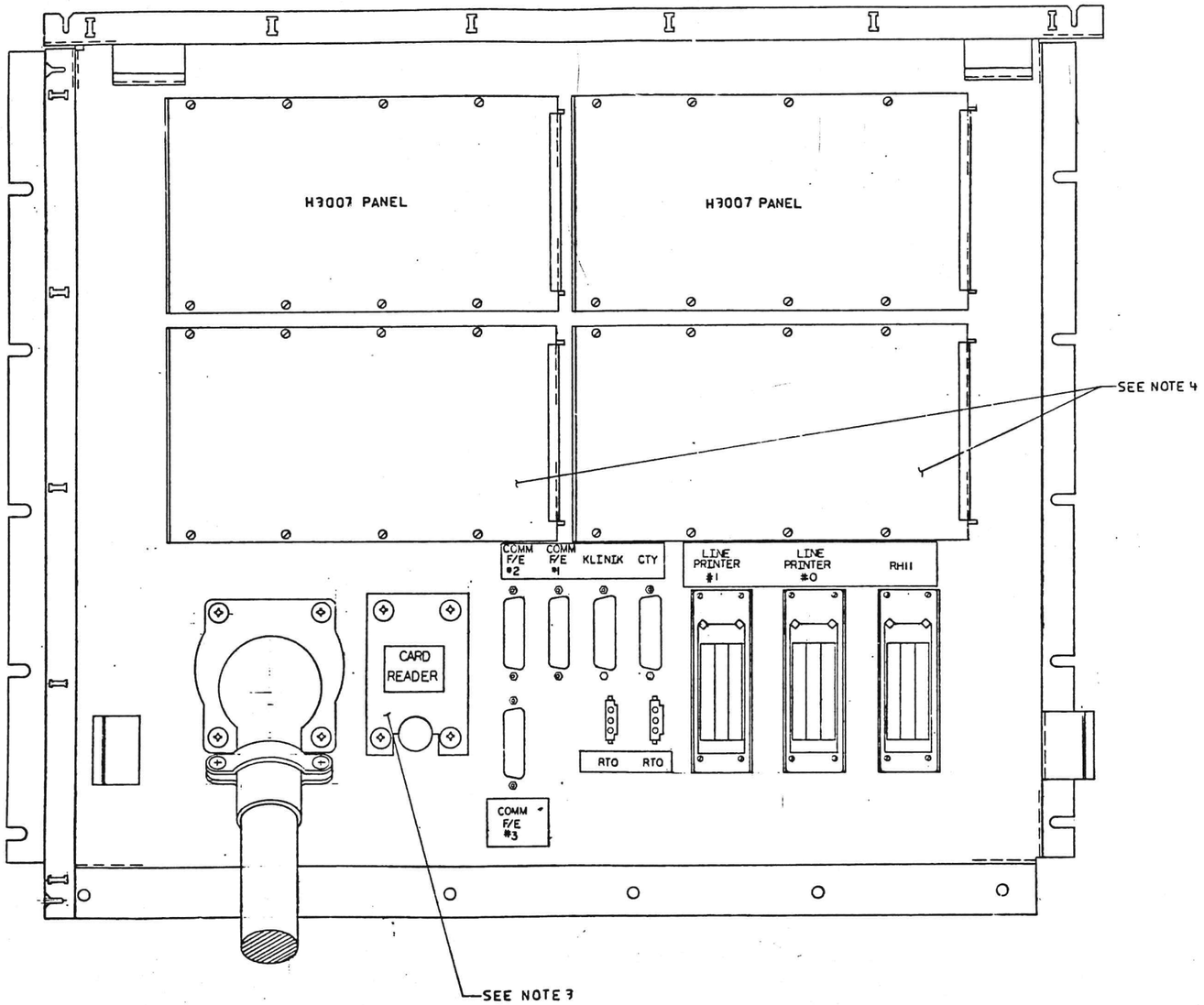

DETAIL **K** SH4
SCALE:1/1
(SHOWN FOR CABLING REFERENCE ONLY)

REVISION HISTORY		
REV.	ECO NUMBER	DATE

TITLE KL10-R PROCESSOR UNIT

DOCUMENT NUMBER			
SIZE E	CODE UA	NUMBER KL10-R-0	REV. A
SCALE 1/5	SHEET 5 OF 8		

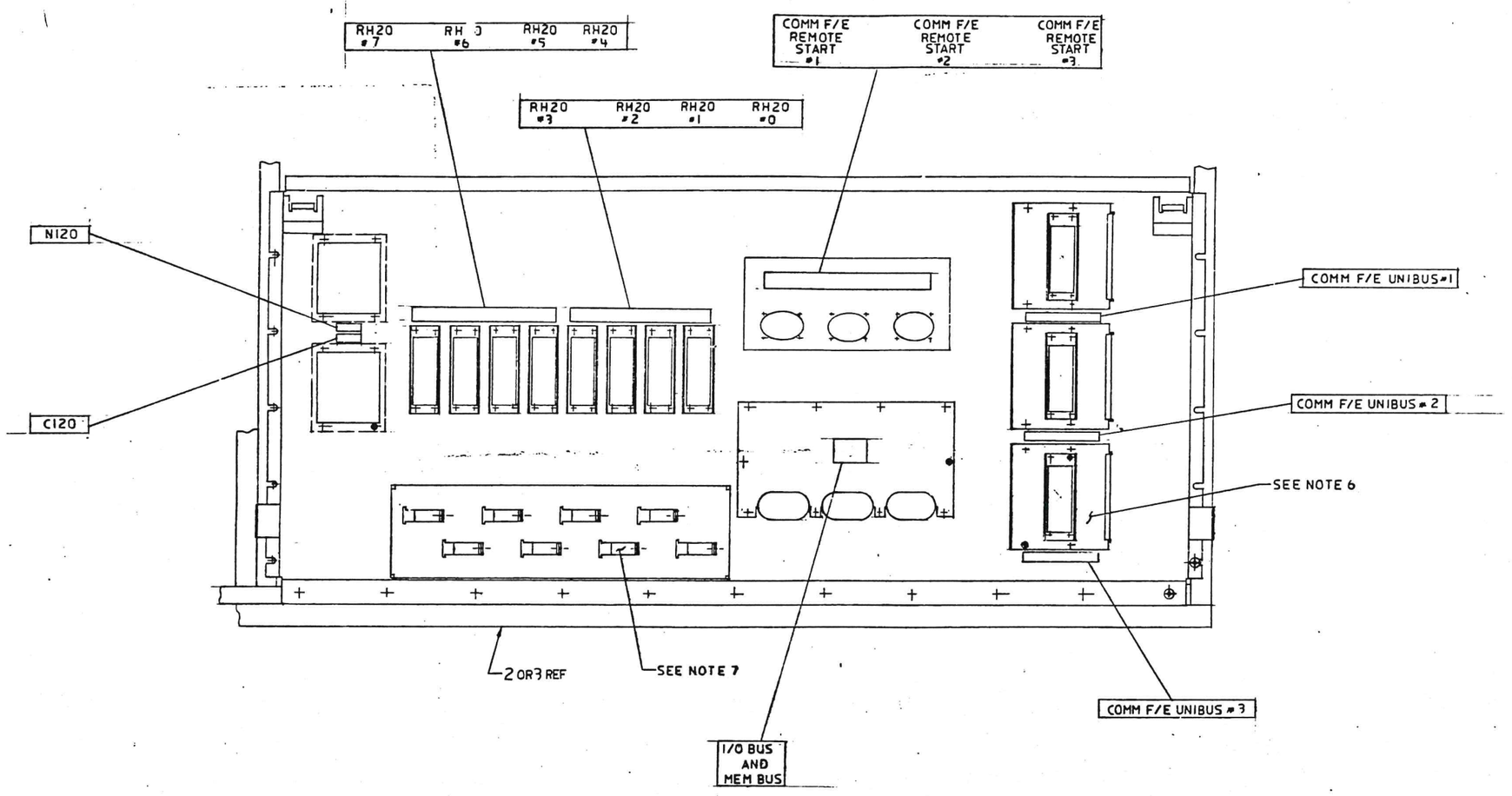

DETAIL J SH4
SHOWN FOR CABLING REF ONLY

REVISION HISTORY

REV	ECO NUMBER	DATE

TITLE KL10-R UNIT ASSY

DOCUMENT NUMBER

SIZE	CODE	NUMBER	REV
E	1A	KL10-R-0	A

THIS DRAWING AND THE SPECIFICATIONS CONTAINED THEREIN ARE CONFIDENTIAL AND PROPRIETARY TO DIGITAL EQUIPMENT CORPORATION AND SHALL NOT BE REPRODUCED OR COPIED IN WHOLE OR IN PART OR USED IN THE MANUFACTURE OR SALE OF ITEMS NOT MADE BY DIGITAL EQUIPMENT CORPORATION EXCEPT AS SPECIFICALLY AUTHORIZED IN WRITING BY DIGITAL. THIS DRAWING IS ALSO WORK PROTECTED UNDER THE FEDERAL COPYRIGHT LAWS.

INTER-CABINET CABLE CONNECTIONS

CPU TO I/O CABINETS

H7731 POWER CORDS: (7021029-03)

CONNECT PLUG LABELED 24 (CPU) TO JACK LABELED 24 (I/O)
CONNECT PLUG LABELED 26 (CPU) TO JACK LABELED 26 (I/O)

MF20 FAN POWER(AC) HARNESS: (7020712-01, 7020714-01)

CONNECT MATE-N-LOCK LABELED P9 (CPU) TO MATE-N-LOCK LABELED J9 (I/O)

REMOTE TURN ON CABLES: (7008288-8F)

ROUTE CABLE FROM I/O CAB ALONG BOTTOM OF CPU CAB TO H7731 #1 (BOTTOM) XU2

H760 POWER CABLES: (7020493-00 THRU 06)

ROUTE (7) 2 AWG CABLES FROM I/O CAB THROUGH BRACKET ON CPU EQUIPMENT MOUNTING DOOR TO CAPACITOR BOX STUDS AS FOLLOWS:

WIRE # 5 6 7 8 9 10 11
TO STUD # 5 6 7 8 9 10 11
} USE ITEM 35 & 36

MARGIN SENSE CABLES: (7020328-00)

ROUTE MARGIN SENSE CABLES FROM CPU CAB TO MF20 #1 AND MF20 #2 CLAMPING DOWN IN EXISTING CLAMPS.

CABLE (J11) TO MF20 #1 PA01 (FROM BOTTOM H7731)
CABLE (J11) TO MF20 #2 PA01 (FROM TOP H7731)

FAULT HARNESS: (7020320-00, 7020319-00)

CONNECT J17 (CPU) TO P17 (I/O)

MF20 DC POWER HARNESSES: (7020494-00, 7020495-00, 7020378-00, 7020317-00)

CONNECT:
P1 (CPU) TO J1 (I/O)
P2 (CPU) TO J2 (I/O)
P3 (CPU) TO J3 (I/O)
P4 (CPU) TO J4 (I/O)

MASTER OSCILLATOR DC HARNESS: (7020711-01, 7020317-00)

CONNECT P10 (CPU) TO J10 (I/O)

COAX CABLES: (1700100-00)

ROUTE COAX CABLES (2) FROM I/O CAB THROUGH WIRE BASKET (CPU) AND CONNECT TO MASTER OSCILLATOR (KW20)

MF20 #1 TO KW20/J1
MF20 #2 TO KW20/J3

I/O DC HARNESS: (7020320-00, 7020316-00)

CONNECT J6 (CPU) TO P16 (I/O)

DC VOLTAGE MONITOR HARNESS:

ROUTE RED & BLACK TWP FROM I/O TO CPU LOGIC (LOWER) AND CONNECT TO POWER TABS.

WIRE #46 (RED) TO CPU BACKPLANE +5 LOWER (TERMINAL LABELED ON BACKPLANE)
WIRE #45 (BLK) TO CPU BACKPLANE GND LOWER (TERMINAL LABELED ON BACKPLANE)

BC11A-02 (ITEM 23)

CPU MODULE SLOT AB01 TO I/O MODULE SLOT AB37 (CABLE MUST BE CLAMPED IN STRAIN RELIEF AS SHOWN IN VIEW A-A)

BC20C-1C (ITEM 24)

CPU MODULE SLOT CD01 TO I/O MODULE SLOT CD37
CPU MODULE SLOT EF01 TO I/O MODULE SLOT EF37
(CABLE MUST BE CLAMPED IN STRAIN RELIEF AS SHOWN IN VIEW A-A)

M8572 (ITEM 25)

CONNECT CLOCK SELECT CABLE (7015524-8F)/J1 (COILED IN CPU CAB) TO M8572/J5 AND CLAMP WITH SUPPLIED TIE WRAP
INSERT M8572 INTO SLOT 2 OF CPU BACKPLANE. (CLAMP CABLES IN STRAIN RELIEF AS SHOWN IN VIEW A-A)

H761 POWER HARNESS (7020312-00)

CONNECT P2 TO CPU BLOWER/J2
CONNECT P1 TO H761/J1
CONNECT 1 (BLK) TO H761/J6
2 (GRN) TO H761/J5
3 (ORN) TO H761/J4

I/O CABINET TO F/E CABINET

AC POWER CORDS:

CONNECT:
24 (I/O) TO J24 (F/E) ON 863 POWER CONTROLLER
26 (I/O) TO J26 (F/E) ON 863 POWER CONTROLLER
28 (I/O) TO J28 (F/E) ON 863 POWER CONTROLLER
29 (I/O) TO J29 (F/E) ON 863 POWER CONTROLLER
30 (I/O) TO J30 (F/E) ON 863 POWER CONTROLLER

H760 POWER CORD: (7011036-01)

CONNECT POWER CORD (I/O) TO 863/J1 (F/E)

FAULT HARNESS: (7020319-00 & 7020840-01)

CONNECT P2 (I/O) TO J2 (F/E) & P1 (I/O) TO J1 (F/E)

DTE POWER (I/O DC HARNESS: 7020316-00 & 7020839-01)

CONNECT P15 (I/O) TO J15 (F/E)

RTO CABLE (7008288-8F & 7020839-01)

CONNECT RTO FROM I/O CAB TO J2 (F/E)

UNIBUS

CONNECT THE UNIBUS CABLE (BC11A-13) FROM 11/40 DRAWER (F/E) TO SLOT HJ05 OF THE DTE20 BACKPLANE
CONNECT THE UNIBUS CABLE (BC11A-17) FROM THE EXPANSION DRAWER (F/E) TO SLOT HJ06 OF THE DTE 20 BACKPLANE

AUTOMATED BY PRTLST.5R(52)

P A R T S L I S T

LINE	ITEM	TOP DOCUMENT	PART NUMBER	MIN REV	DESCRIPTION	QTY PER VARIATION RA A1	RC A1	RE A1
1	1	E-AD-7020327-0-0	7020327-00		FRONT END CAB ASSY.	1	1	-
2	2	E-AD-7020325-0-0	7020325-00		I/O CAB ASSY (WITH MEM)	1	1	-
3	3	E-AD-7020325-0-0	7020325-01		I/O CAB ASSY (WITHOUT MEM)	-	-	1
4	4	E-AD-7020326-0-0	7020326-00		CPU CAB ASSY (WITH MEM)	1	1	-
5	5	E-AD-7020326-0-0	7020326-01		CPU CAB ASSY (WITHOUT MEM)	-	-	1
6	6	E-IA-7020305-0-DBU	7020305-00		EXPANDER FRAME ASSY.	2	2	2
7	7	E-IA-7019485-0-0	7019485-00		END PANEL ASSY.	2	2	2
8	8	E-IA-7019498-0-DBU	7019498-02		COVER, WELDMENT TOP, DBL TERRA C	3	-	-
9	9	E-IA-7019498-0-DBU	7019498-03		COVER, WELDMENT TOP, DBL BLAISI	-	3	3
10	10	D-IA-7426475-0-0	7426475-01	A	BEZEL,FRONT END CABINET	1	-	-
11	11	D-IA-7426475-0-0	7426475-02		BEZEL,FRONT END CABINET (BLUE)	-	1	1
12	12	D-MD-7426499-0-0	7426499-01	A	BEZEL,FRONT	2	-	-
13	13	D-MD-7426499-0-0	7426499-02	A	BEZEL,FRONT	-	2	2
14	14	E-AD-7020245-0-0	7020245-00		DOOR ASSEMBLY, FRONT R.H.	3	3	3
15	15	E-AD-7020246-0-0	7020246-00		DOOR ASSEMBLY, FRONT L.H.	2	2	2
16	16	D-MD-7020716-0-0	7020716-01		DOOR ASSY F.E. LEFT FRONT	1	1	1
17	17	E-AD-7020248-0-0	7020248-00		DOOR ASSEMBLY, REAR L.H.	2	2	2
18	18	E-AD-7020485-0-0	7020485-00		DOOR ASSEMBLY, REAR LH	1	1	1
19	19	E-AD-7020247-0-0	7020247-00		DOOR ASSEMBLY, REAR R.H.	1	1	1
20	20	E-AD-7020486-0-0	7020486-00		DOOR ASSEMBLY, REAR LH	2	2	2
21	21	D-MD-7426515-0-0	7426515-01	A	I/O BULKHEAD COVER	1	1	1
22	22	D-MD-7429286-0-0	7429286-01	A	F/E BULKHEAD COVER	1	1	1
23	23	D-UA-BC11A-0-0	BC11A-02		CABLE ASSY PDP-11 M919-M929	1	1	1
24	24	D-UA-BC20C-0-0	BC20C-1C		CABLE CONN ASSY 15 INCH	2	2	2
25	25	D-UA-M8572-0-0	M8572-00		MULTIPLE S-BUS TRANSLATOR, 4 LAY	1	1	-
26	26	E-AD-7020327-0-0	7020327-01		FRONT END CAB ASSY.	-	-	1
27	27		9008203-00	A	NUT,HEX EXT TOOTH LCKWSHR 1/4-20	48	48	48
28	28		9006243-09	A	SCREW,MACH HEX PLN 1/4-	24	24	24

REVISION HISTORY			BASIC PART NO: OKL10
ENG	ECO NUMBER	REV	SECTION A OF A
	INITIAL	A	SECTION.VARIATION INDEX [A]RA,RC,RE [B] [C] [D] [E] [F]

DRN: VICKY GUTBIER	DATE: 11-JUL-83	D I G I T A L	
CHK'D: ROGER SCOTT	DATE: 11-JUL-83	TITLE PARTS LIST KL10-R PROCESSOR UNIT	
DES.ENG: ROGER SCOTT	DATE: 11-JUL-83	DOCUMENT NUMBER	
RESP.ENG.: ROGER SCOTT	DATE: 11-JUL-83	SIZE: K	CODE: PL	NUMBER: KL10-R-DBP	REV: A
MFG.ENG.: SUE ALMEIDA	DATE: 11-JUL-83	RELEASE DATE:	
ASSEMBLY NUMBER: E-UA-KL10-R-0	TOP DOCUMENT NUMBER: B-DD-KL10-R-0	FILE NAME: Z7427A.PLS	EDIT #: 18

"THIS DRAWING AND THE SPECIFICATIONS CONTAINED HEREIN ARE CONFIDENTIAL AND PROPRIETARY. THEY ARE THE PROPERTY OF DIGITAL EQUIPMENT CORPORATION AND SHALL NOT BE REPRODUCED OR COPIED OR USED IN WHOLE OR IN PART AS THE BASIS FOR THE MANUFACTURE OR SALE OF ITEMS WITHOUT WRITTEN PERMISSION. THIS IS AN UNPUBLISHED WORK PROTECTED UNDER THE FEDERAL COPYRIGHT LAWS."

MRO

AUTOMATED BY PRTLST.5R(52)

P A R T S L I S T

LINE	ITEM	TOP DOCUMENT	PART NUMBER	MIN REV	DESCRIPTION	QTY PER VARIATION RA A1	RC A1	RE A1
29	29		9006724-00	A	WASHER,LOCK EXTERNAL STEEL	25	25	25
30	30		9009700-00	A	SCREW,SEMS TRUSS PHIL 10-	26	26	26
31	31		9006073-01	A	SCREW,MACH PAN PHIL 10-	6	6	6
32	32		9006071-02	A	SCREW,MACH FLAT PHIL 10-	6	6	6
33	33		9007651-00	B	WASHER,LOCK EXTERNAL STEEL	12	12	12
34	34		9006565-00	C	NUT,HEX EXT TOOTH LCKWSHR 10-32	17	17	17
35	35		9006568-00	A	NUT,HEX EXT TOOTH LCKWSH 5/16-18	7	7	7
36	36		9006638-00	A	WASHER,LOCK INTERNAL STEEL	7	7	7
37	37		9006635-00	A	WASHER,LOCK INTERNAL STEEL	6	6	6
38	38	D-UA-DTB20-0-0	DTB20-00		I/O BUS ADAPTER	-	-	1
39	39		3617674-01	E	LABEL,SERIAL/POWER W UL & CSA	2	2	2
40	40		3612449-00		LABEL, UL. FOIL VINYL, ADH BACK,	1	1	1
41	41		3613211-01	A	DECAL,CLEAR PREPRINTED CSA 1-1/4	2	2	2
42	42	D-UA-M8580-0-0	M8580-00		TRANSLATOR DUAL MF20	2	2	-
43	43	B-DD-RH20-0-0	DRH20-00		MASS BUS CONTROLLER	2	2	1
44	44	A-PL-DTE20-0-0	DTE20-00		PDP11 TO KL10 INTERFACE	1	1	1
45	45	A-PL-DMA20-0-0	DMA20-00		KI10 MEM ADAPTOR	-	-	1
46	46	D-IA-BC20C-0-0	BC20C-6C		CABLE CONN ASSY 6FT-3INCH	-	-	2
47	47	D-MD-7426513-0-0	7426513-01	A	GUARD,FINGER,R.H.,FE	1	1	1
48	48		3617380-02	E	LABEL,FCC,CLASS A,PROCESSOR	1	1	1
49	49		9007786-00		RETAINER,U-NUT 10-32X	8	8	8
50	50	B-MD-7413486-0-0	7413486-00	A	BRKT SHIPPING 11/70	2	2	2
51	51		9009350-01		TIE,CABLE BUNDL.DIA 0-4"NONRELEA	1	1	-
52	52		9006249-09	A	SCREW,MACH HEX PLN 1/4-	1	1	1
53	53		9006075-03	A	SCREW,MACH TRUSS PHIL 10-	1	1	1
54	54	D-MD-7426514-0-0	7426514-01	A	GUARD,FINGER,L.H.,F.E.	1	1	1
55	55		9009537-00	A	FASTENER, SQUEEZE RELEASE, BLACK	4	4	4
56	56		3618307-05		ASSY,04,01	1	1	1
57	57		3613272-00	B	LABEL,ADH BACK,MYLAR CAP	12	12	12
58	58		7009938-00		TERMINATOR ASSEMBLY (80-RJP04)	1	1	1

DIGITAL	TITLE	SECTION	SIZE	CODE	DOCUMENT NUMBER	REV
	KL10-R PROCESSOR UNIT	A OF A	K	PL	KL10-R-DBP	A

MRO

"THIS DRAWING AND SPECIFICATIONS, HEREIN, ARE THE PROPERTY OF DIGITAL EQUIPMENT CORPORATION AND SHALL NOT BE REPRODUCED OR COPIED OR USED IN WHOLE OR IN PART AS THE BASIS FOR THE MANUFACTURE OR SALE OF ITEMS WITHOUT WRITTEN PERMISSION.
COPYRIGHT © 1973 DIGITAL EQUIPMENT CORPORATION"

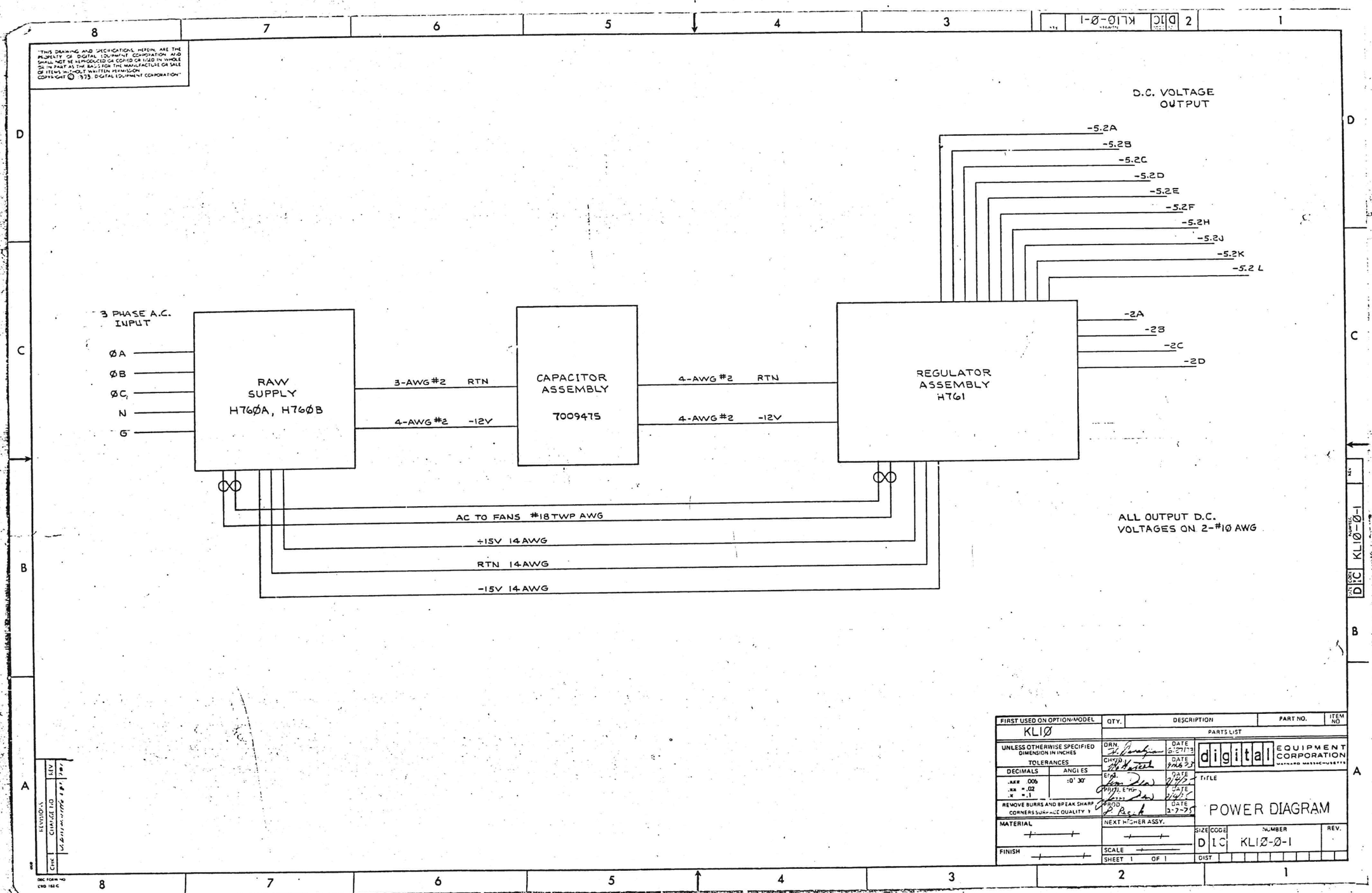

FIRST USED ON OPTION/MODEL	QTY.	DESCRIPTION	PART NO.	ITEM NO
KLIØ		PARTS LIST		

UNLESS OTHERWISE SPECIFIED DIMENSION IN INCHES
TOLERANCES
DECIMALS .XXX .005, .XX .02, .X .1
ANGLES :0° 30'
REMOVE BURRS AND BREAK SHARP CORNERS SURFACE QUALITY ↑

DRN.	DATE	6/27/73
CHKD	DATE	7/16/73
ENGR.	DATE	7/17/73
APPD. ENGR.	DATE	7/17/73
PROD.	DATE	7-7-73

digital EQUIPMENT CORPORATION MAYNARD MASSACHUSETTS

TITLE: POWER DIAGRAM

MATERIAL
FINISH
NEXT HIGHER ASSY.
SCALE
SHEET 1 OF 1

SIZE	CODE	NUMBER	REV.
D	1C	KLIØ-Ø-1	

DIST

REVISIONS			
CHG	CHANGE NO		
		Released per ECO 1824	KEV

DEC FORM NO C1RD 182 C

THIS DRAWING AND SPECIFICATIONS, HEREIN, ARE THE PROPERTY OF DIGITAL EQUIPMENT CORPORATION AND SHALL NOT BE REPRODUCED OR COPIED OR USED IN WHOLE OR IN PART AS THE BASIS FOR THE MANUFACTURE OR SALE OF ITEMS WITHOUT WRITTEN PERMISSION.
COPYRIGHT © 1973, DIGITAL EQUIPMENT CORPORATION

REGULATOR ASSEMBLY H761

RTN

-12V

FAN AC IN

+15V

RTN

-15V

REMOTE SENSE LEADS TWP AWG #18

-2.ØD -2.ØC -2.ØB -2.ØA -5.2L -5.2K -5.2J -5.2H -5.2F -5.2E -5.2D -5.2C -5.2B -5.2A

LOAD -5.2A
LOAD -5.2B
LOAD -5.2C
LOAD -5.2D
LOAD -5.2E
LOAD -5.2F
LOAD -5.2H
LOAD -5.2J
LOAD -5.2K
LOAD -5.2L
LOAD -2.ØA
LOAD -2.ØB
LOAD -2.ØC
LOAD -2.ØD

DC POWER TO LOAD 2-AWG #1Ø

REVISIONS		
CHK	CHANGE NO	REV
VIGILANCE ACTIVE +5V		

DEC FORM 40
DWG 103-C

FIRST USED ON OPTION MODEL	QTY.	DESCRIPTION	PART NO.	ITEM NO.
KLIØ		PARTS LIST		

UNLESS OTHERWISE SPECIFIED DIMENSION IN INCHES
TOLERANCES
DECIMALS .XXX = .005 .XX = .02 .X = .1
ANGLES ±0 30'
REMOVE BURRS AND BREAK SHARP CORNERS SURFACE QUALITY

DRN. H. Bonfiglio	DATE 6/27/73	digital EQUIPMENT CORPORATION MAYNARD, MASSACHUSETTS
CHK'D A. DeStefano	DATE 9/26/73	
ENG. Tom Dixon	DATE 9/26/73	TITLE REGULATOR ASSEMBLY
PROJ ENG. Tom Dixon	DATE 9/26/73	
PROD. P. Pigott	DATE 9-27-73	

MATERIAL
FINISH
NEXT HIGHER ASSY.
SCALE
SHEET 1 OF 1

SIZE	CODE	NUMBER	REV.
D	IC	KLIØ-Ø-2	

DIST.

KLIØ-Ø-2 D IC 2

"THIS DRAWING AND SPECIFICATIONS, HEREIN, ARE THE PROPERTY OF DIGITAL EQUIPMENT CORPORATION AND SHALL NOT BE REPRODUCED OR COPIED OR USED IN WHOLE OR IN PART AS THE BASIS FOR THE MANUFACTURE OR SALE OF ITEMS WITHOUT WRITTEN PERMISSION.
COPYRIGHT ©1975, DIGITAL EQUIPMENT CORPORATION"

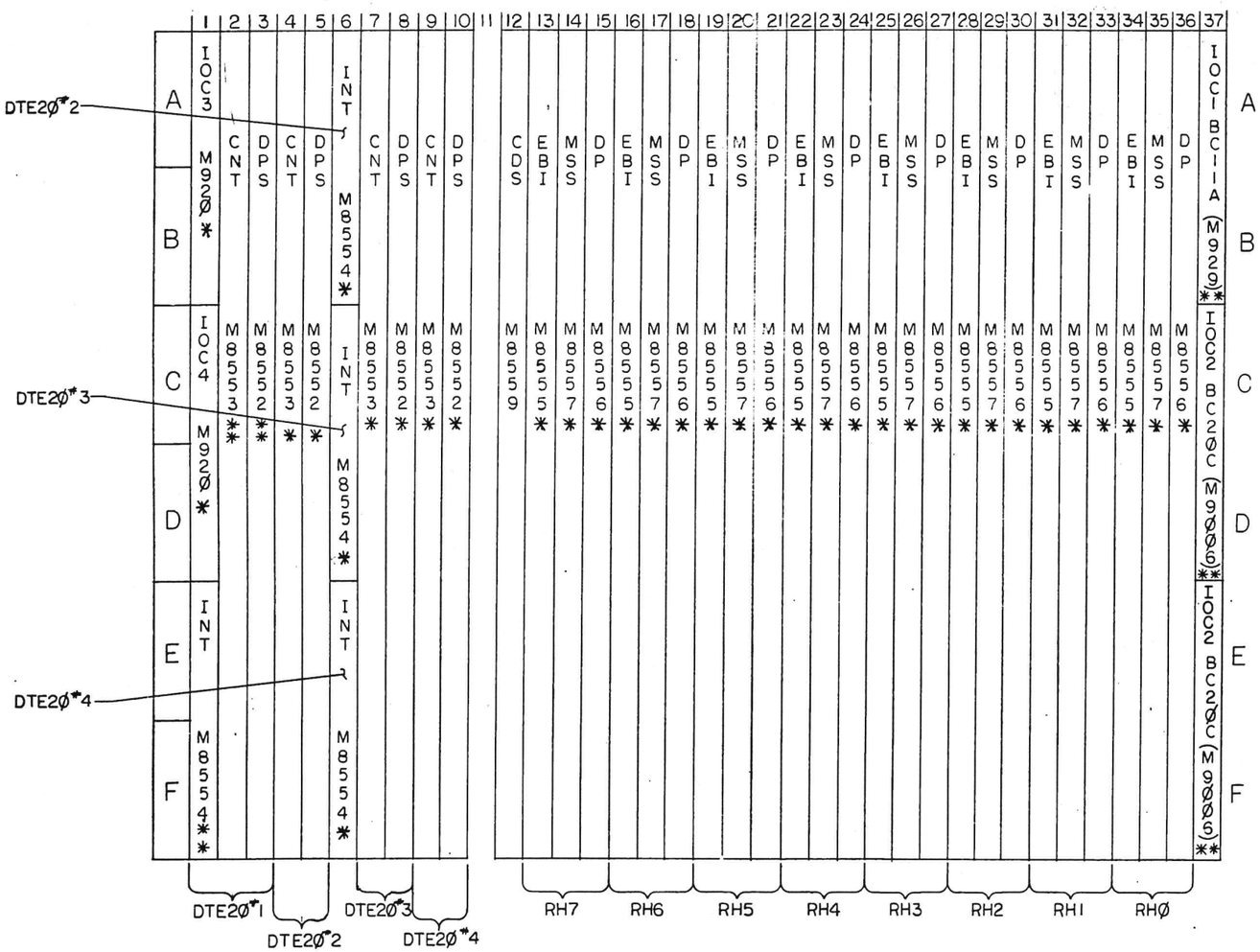

REF: PIN SIDE
* INSTALLED AT SYSTEMS LEVEL
** INSTALLED AT KLIØ UNIT ASSY LEVEL D-UA-KLIØ-Ø-Ø

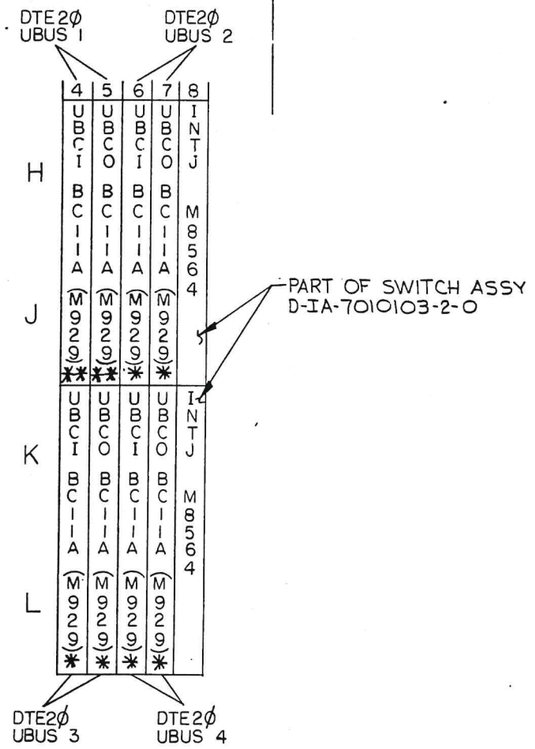

REF: PIN SIDE

NOTES:
1. ITEM NOT SHOWN WITH AN ASTERISK ARE PART OF RH2Ø/DTE2Ø LOGIC ASSY E-AD-7010102-0-0

DESCRIPTION	DWG./PART NO	ITEM NO.

UNLESS OTHERWISE SPECIFIED DIMENSIONS ARE IN INCHES

ANGLES ±30' 30'	CLASS OF ACCURACY (CHECK ONE)	NOMINAL DIMENSION RANGE INCHES					
		OVER 0 TO 0.2	OVER 0.2 TO 1.2	OVER 1.2 TO 4.0	OVER 4.0 TO 12.0	OVER 12.0 TO 40.0	OVER 40.0 TO 80.0
SURFACE QUALITY IN ✓ MICROINCHES	MEDIUM ☐	±.004	±.008	±.012	±.016	±.024	±.04
	PREFERRED ☐	±.012	±.016	±.025	±.04	±.063	±0.1

QUANTITY & VARIATION

THIRD ANGLE PROJECTION

REMOVE BURRS AND BREAK SHARP CORNERS

DO NOT SCALE DWG

MATERIAL —

FINISH —

DRN. M. Giglio 3-11-75
CHK'D [illegible] 3-25-75
ENG. [illegible] 3-25-75
PROJ. MGR. [illegible] 3-27-75
PROD. [illegible] 3-26-75

NEXT HIGHER ASSY. E-UA-KLIØ-Ø-Ø

SCALE —

SHEET 1 OF 1

FIRST USED ON KLIØ digital

TITLE MODULE UTILIZATION RH2Ø-DTE2Ø

SIZE	CODE	NUMBER	REV.
D	MU	KLIØ-Ø-RHDT	

DIST.

REV.	CHANGE NO.	REVISN.	CHK

DEC FORM NO. DRD 100-C

MR

"THIS DRAWING AND SPECIFICATIONS, HEREIN, ARE THE PROPERTY OF DIGITAL EQUIPMENT CORPORATION AND SHALL NOT BE REPRODUCED OR COPIED OR USED IN WHOLE OR IN PART AS THE BASIS FOR THE MANUFACTURE OR SALE OF ITEMS WITHOUT WRITTEN PERMISSION.
COPYRIGHT © 1975, DIGITAL EQUIPMENT CORPORATION"

SEE NOTES 1 & 2

	1	2	3	4	5	6	7	8	9	10	11	12	13	14	15	16	17
A	BC11A	BC2ØC (M9006)	BC2ØC (M9006)	E+C BUS TRAN	E+C BUS TRAN	E+C BUS TRAN	S BUS TRAN	S BUS TRAN	CH	CRC	CCL	CCW		MB	MB	MB	CHD
B	(M919)	S BUS	S BUS														
C	BC2ØC	BC2ØC	BC2ØC	M8516	M8516	M8516	M8519	M8519	*	*	*	*	SPARE	M8517	M8517	M8517	*
D	(M9006)	(M9006)	(M9006)														
E	BC2ØC (M9006)	SPARE	SPARE														
F																	

	19	20	21	22	23	24	25	26	27	28	29	30	31	32	33	34	35	36
A	CHD	MBZ	MBX	MBC	CSH	CHD	CHD		CHA	CHX	PMA	PAG	PI	CLK	MTR	APR	CON	CEL
B																		
C	*	M8537	M8529	M8531	M8513	*	*	SPARE	*	*	M8518	M8528	M8532	M8526	M8538	M8539	M8525	M8527
D																		
E																		
F																		

	38	39	40	41	42	43	44	45	46	47	48	49	50	51	52	53	54
A	VMA	EDP	CRM	EDP	CRM	EDP	CRM	CRA	SH	MCL	IR	EDP	CRM	EDP	CRM	EDP	SCD
B																	
C	M8523	M8512	M8528	M8512	M8528	M8512	M8528	M8511	M8519	M8539	M8522	M8512	M8528	M8512	M8528	M8512	M8524
D																	
E																	
F																	

REF. PIN SIDE
* SEE MODULE VARIATION TABLE

VARIATION MODULE LOCATION CHART

SLOT	MODULE/VARIATION		
	CACHE NO CHANNEL	CHANNEL NO CACHE	CACHE & CHANNEL
9	M8549-YA	M8533	M8533
10	NONE	M8535	M8535
11	M8549 YD	M8538	M8538
12	M8549 YB	M8534	M8534
17	M8521	M8549-YH	M8521
18	NONE	NONE	NONE
19	M8521	M8549-YH	M8521
24	M8521	M8549-YH	M8521
25	M8521	M8549-YH	M8521
27	M8514	M8549-YE	M8514
28	M8515	M8549-YF	M8515
	KLIØ AA, AB REF	KLIØ CA, CB REF	KLIØ BA, BB, BC, BD REF

NOTES:

1. SLOT 2 & 3 (SBUS) BC2ØC CABLES FROM INTERNAL MEMORY, OR DMA2Ø OR EMPTY
2. SLOT 1 (E AND C BUS) BC11A & BC2ØC CABLES FROM DTE

REVISIONS		
CHK	CHANGE NO.	REV.
	KLIO-00008	A
	J. PROVIDENT	

DEC FORM NO. DRD 100-C

DESCRIPTION	DWG. PART NO.	ITEM NO.
UNLESS OTHERWISE SPECIFIED DIMENSIONS ARE IN INCHES		

ANGLES ±0° 30'
SURFACE QUALITY IN MICROINCHES
CLASS OF ACCURACY (CHECK ONE)
NOMINAL DIMENSION RANGE INCHES

	OVER 0 TO 0.2	OVER 0.2 TO 1.2	OVER 1.2 TO 4.0	OVER 4.0 TO 12.0	OVER 12.0 TO 40.0	OVER 40.0 TO 80.0
MEDIUM	±.004	±.008	±.012	±.016	±.024	±.04
PREFERRED	±.012	±.016	±.025	±.04	±.063	±.1

QUANTITY & VARIATION

THIRD ANGLE PROJECTION

REMOVE BURRS AND BREAK SHARP CORNERS

DO NOT SCALE DWG

MATERIAL —//—

FINISH —//—

DRN.	M. Gichee	2-19-75
CHK'D	[illegible]	3-25-X
ENG.	[illegible]	3-26-75
PROJ. ENG.	[illegible]	3-26-75
PROD.	[illegible]	3-26-75

NEXT HIGHER ASSY. D-UA-KLIØ-Ø-Ø

SCALE —//—

SHEET 1 OF 1

FIRST USED ON KLIØ digital

TITLE MODULE UTILIZATION (CPU)

SIZE	CODE	NUMBER	REV.
D	MU	KLIØ-Ø-CPU	A

DIST.

7020327-01	A1	AS SHOWN

NOTES
1. ALL HOLE COUNTS ARE FROM BOTTOM. BOTTOM HOLE IS HOLE NO. 0. ALL HOLE LOCATIONS ARE DESIGNATED BY *
2. THE KY11-D IS REMOVED FROM ITEM 3 AND MOUNTED AS SHOWN INTERCONNECTING CABLES ARE REPLACED WITH ITEM 8.
3. CUT POWER CORD ON 861-D TO 20.0 IN. LONG REMOVE TWIST LOCK CONNECTOR AND INSTALL ON REMAINDER OF POWER CORD. SEE DETAIL L-L FOR WIRING.
4. DECAL ITEM 55 IS ON ONE SHEET BUT IS MADE UP OF 5 SEPERATE DECALS. PEEL OFF 5 PIECES AND ATTACH WHERE SHOWN.
5. BC08S-10 CABLES (P/O ITEM 57) CAN COME WITH OR WITHOUT STRIPES. THE SMOOTH (SHIELD) SIDE MUST BE AWAY FROM THE MODULE IN THE DH11 BACKPLANE AND UP. ON THE H3007 DISTRIBUTION
6. WHEN INSTALLING (2) DL11-M (ITEM 61) (2) BC27C-09 CABLES (ITEM 76) ARE USED. REMOVE THE PANELS (7426407-04) FROM THE CABLE ASSEMBLIES AND INSTALL THE CABLES IN THE BULKHEAD
7. REMOVE ALL M920 JUMPERS AND REPLACE WITH M9202 JUMPERS (ITEM 75).
8. THE M930 TERMINATOR WILL GO IN SLOT AB04 (OR AB09) OF THE LAST OPTION THAT IS INSTALLED
9. THE RX02-BA (ITEM 7) MUST HAVE S1=ON AND S2=OFF ON THE M7744 MODULE TO RUN IN RX01 MODE

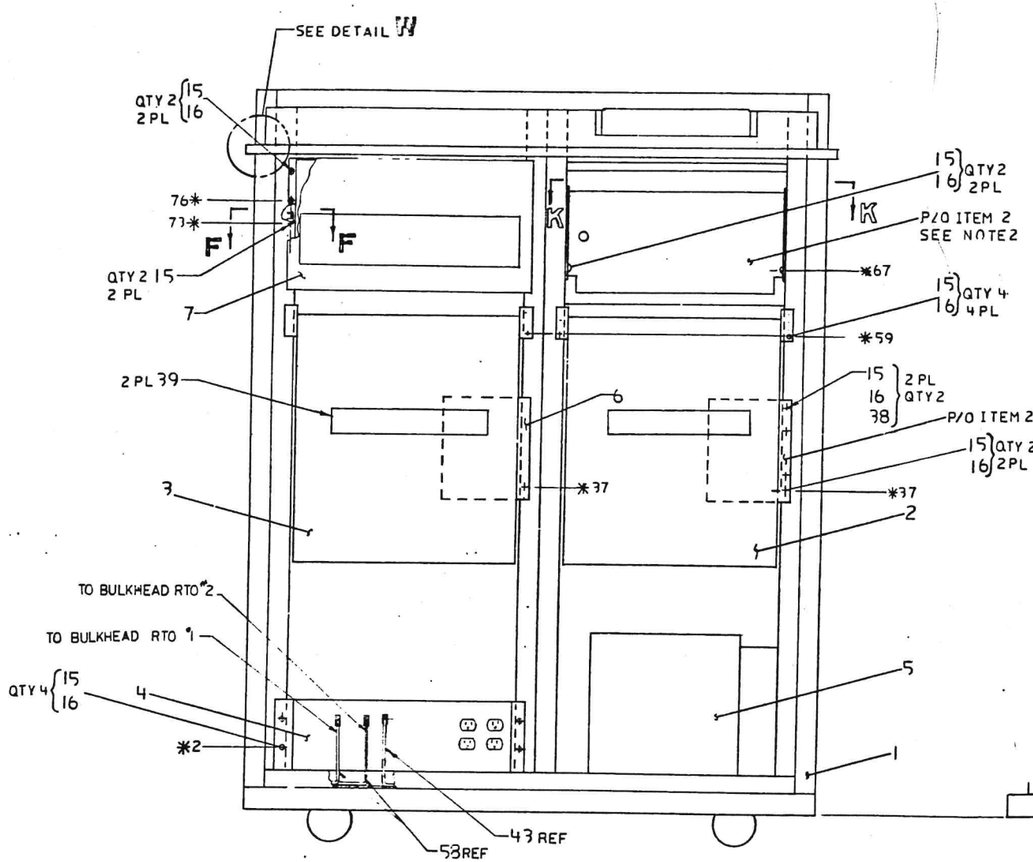

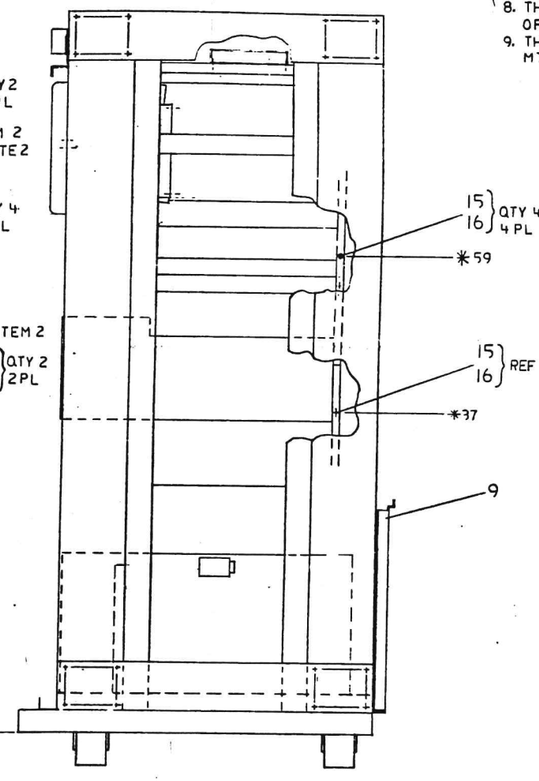

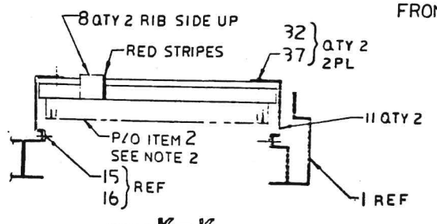

SECT K-K

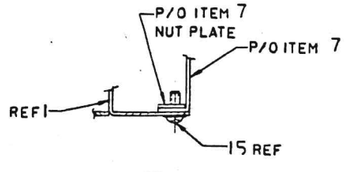

SECT F-F 4 PL
SCALE: 1/1

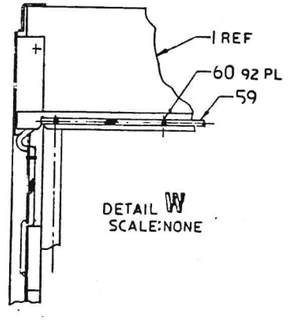

DETAIL W
SCALE: NONE

CAUTION: OFF SHEETS PARTS LIST EXISTS
SEE K-PL-7020327-0-D8P

	DESCRIPTION	DRAWING NO.	PART NO.	ITEM NO
	UNLESS OTHERWISE SPECIFIED DIMENSIONS ARE IN INCHES AND THE FOLLOWING TOLERANCES APPLY (PER DEC STD 114)			

INCHES TOLERANCES	ANGLES ±0° 30'	APPLICABLE DIMENSION RANGE (CHECK ONE)	DIMENSION RANGE IN INCHES: OVER 0 TO 3	OVER 3 TO 12	OVER 12 TO 48	OVER 48 TO 120	OVER 120 TO 480	OVER 480 TO 1000
X ± 0.1	SURFACE QUALITY							
XX ± 0.05								
XXX ± 0.005	MICROINCHES		± .004	± .008	± .012	± .016	± .024	± .04
				± .01	± .02	± .03	± .06	± .10

QUANTITY & VARIATION

THIRD ANGLE PROJECTION

DO NOT SCALE DRAWING

REMOVE BURRS AND BREAK SHARP CORNERS

MATERIAL: SEE PARTS LIST

FINISH: NONE

	NAME	DATE
DRN	J. HYSON	2 OCT 82
CHKD	R. SCOTT	13 SEP 83
DESIGN		15 SEP 83
RELEASE		15 SEP 83
APPVD		15 SEP 83

TITLE: FRONT END CABINET ASSY

DOCUMENT NUMBER: SIZE E, CODE AD, NUMBER 7020327-0-0, REV A

NEXT HIGHER ASSY

REVISION HISTORY

ECO NUMBER	REV	DATE

1702 DIGITAL EQUIPMENT CORPORATION

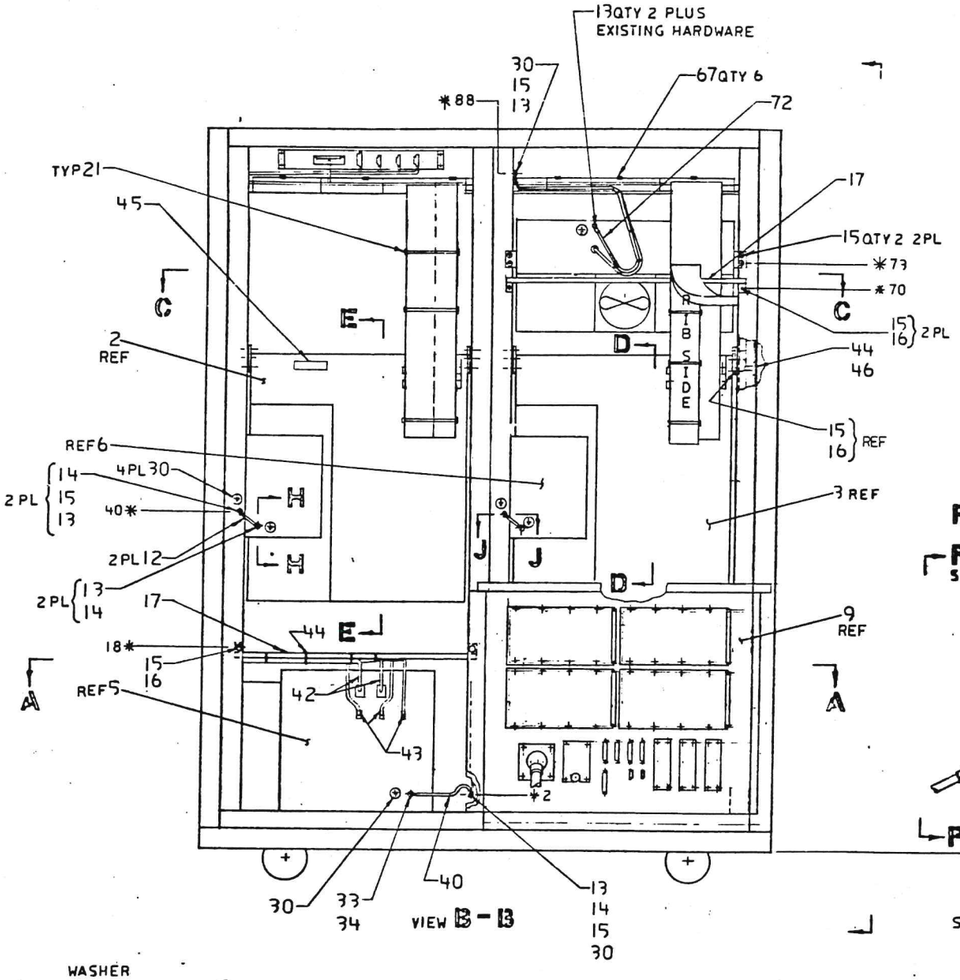

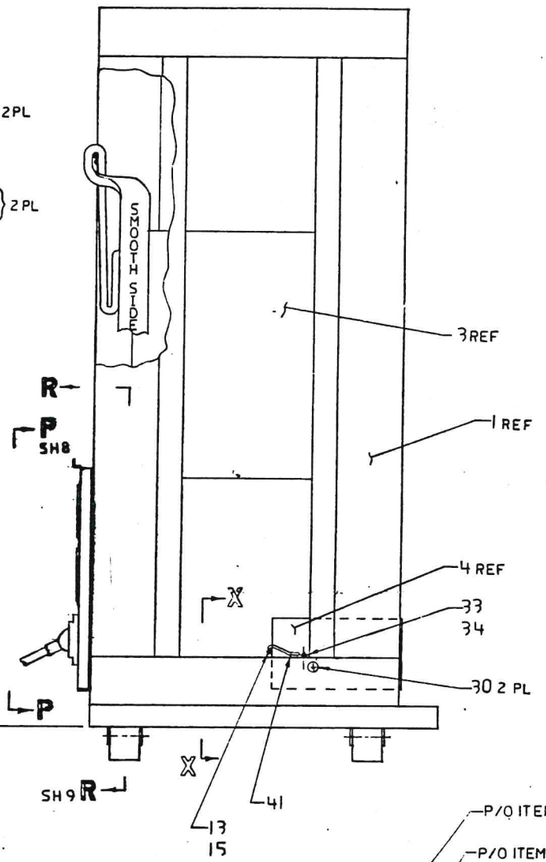

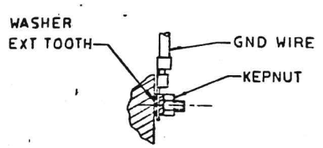

SECT H-H
SCALE 1/1
TYP GND SCHEME

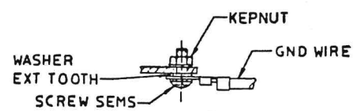

SECT J-J
SCALE 1/1
TYP GND SCHEME

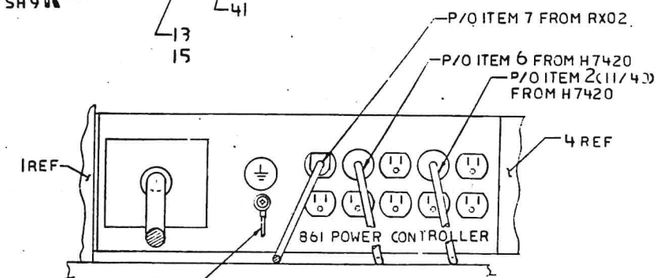

VIEW X-X
SCALE: 1/2

REVISION HISTORY		
DATE	ECO NUMBER	REV

TITLE	DOCUMENT NUMBER		
FRONT END CAB ASSEMBLY	SIZE E	CODE AD	7020327-0-0 REV A
	SCALE 1/4	SHEET 2 OF 11	

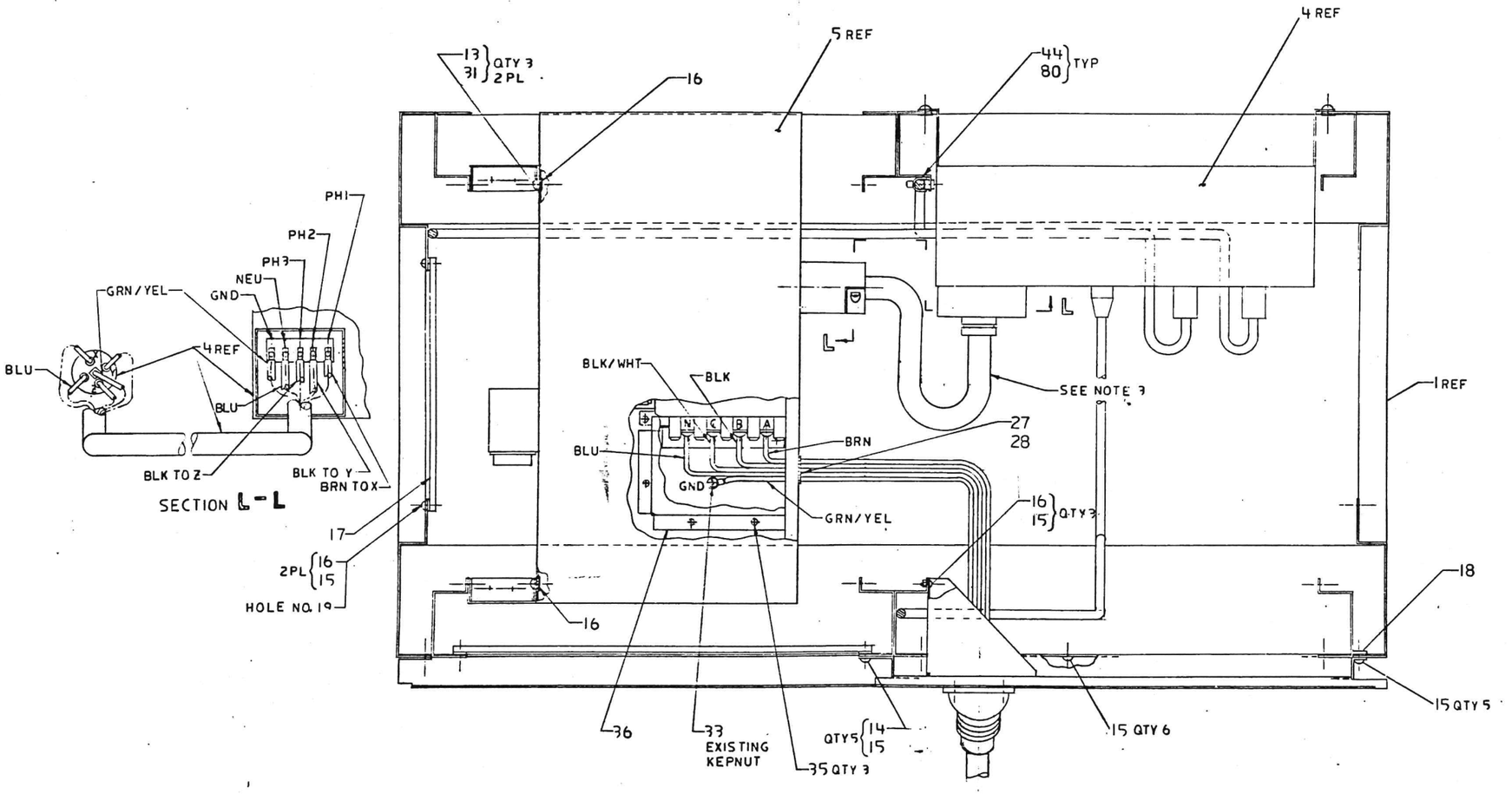

REVISION HISTORY		
DATE	ECO NUMBER	REV

TITLE	DOCUMENT NUMBER			
FRONT END CAB ASSEMBLY	SIZE	CODE	NUMBER	REV
	E	AD	7020327-0-0	A
	SCALE 1/2		SHEET 3 OF 11	

MAY NOT BE REPRODUCED OR USED IN ANY MANNER WHATSOEVER WITHOUT THE EXPRESS WRITTEN PERMISSION OF DIGITAL EQUIPMENT CORPORATION.
COPYRIGHT © DIGITAL EQUIPMENT CORPORATION

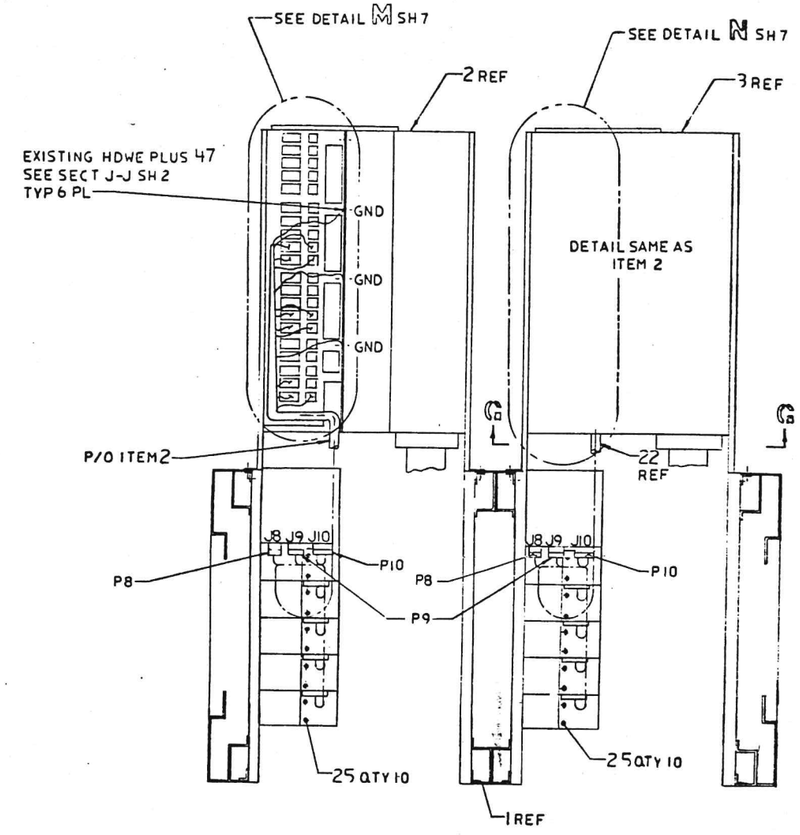

SECT C-C SH 2

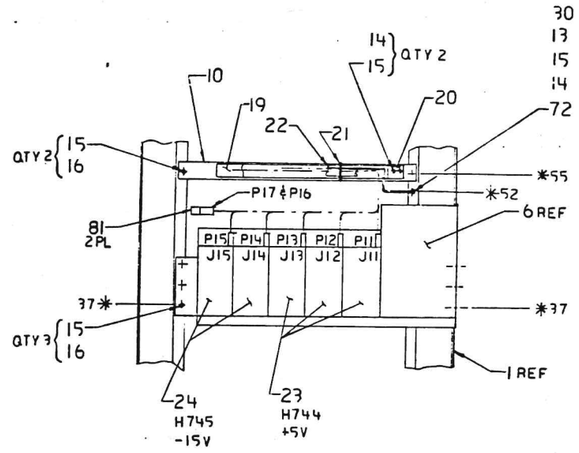

SECT D-D SH 2
SCALE: 1/4

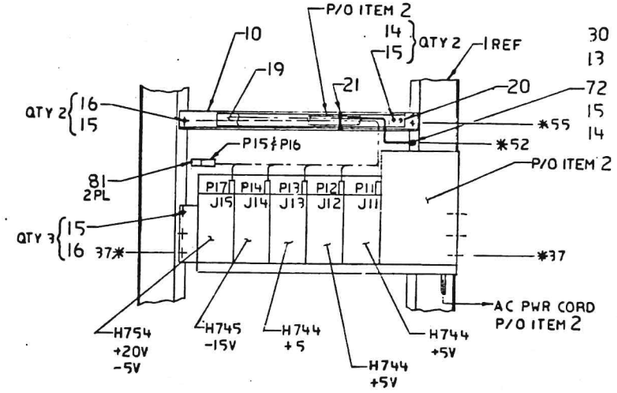

SECT E-E SH 2
SCALE: 1/4

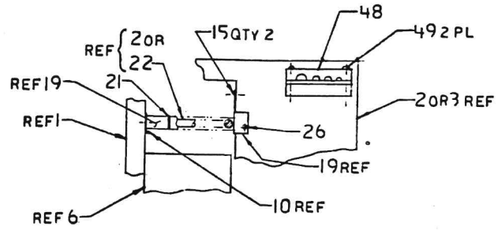

SECT G-G
SCALE: 1/4
TYP 2 PL

REVISION HISTORY		
DATE	ECO NUMBER	REV

TITLE FRONT END
CAB ASSEMBLY

DOCUMENT NUMBER		
SIZE	CODE	NUMBER
E	AD	7020327-0-0

REV A

THIS DRAWING AND SPECIFICATIONS, EITHER ARE THE PROPERTY OF DIGITAL EQUIPMENT CORPORATION AND SHALL NOT BE REPRODUCED OR COPIED OR USED IN PART OR IN WHOLE FOR THE MANUFACTURE OR SALE OF PRODUCTS WITHOUT WRITTEN PERMISSION.
COPYRIGHT © DIGITAL EQUIPMENT CORPORATION

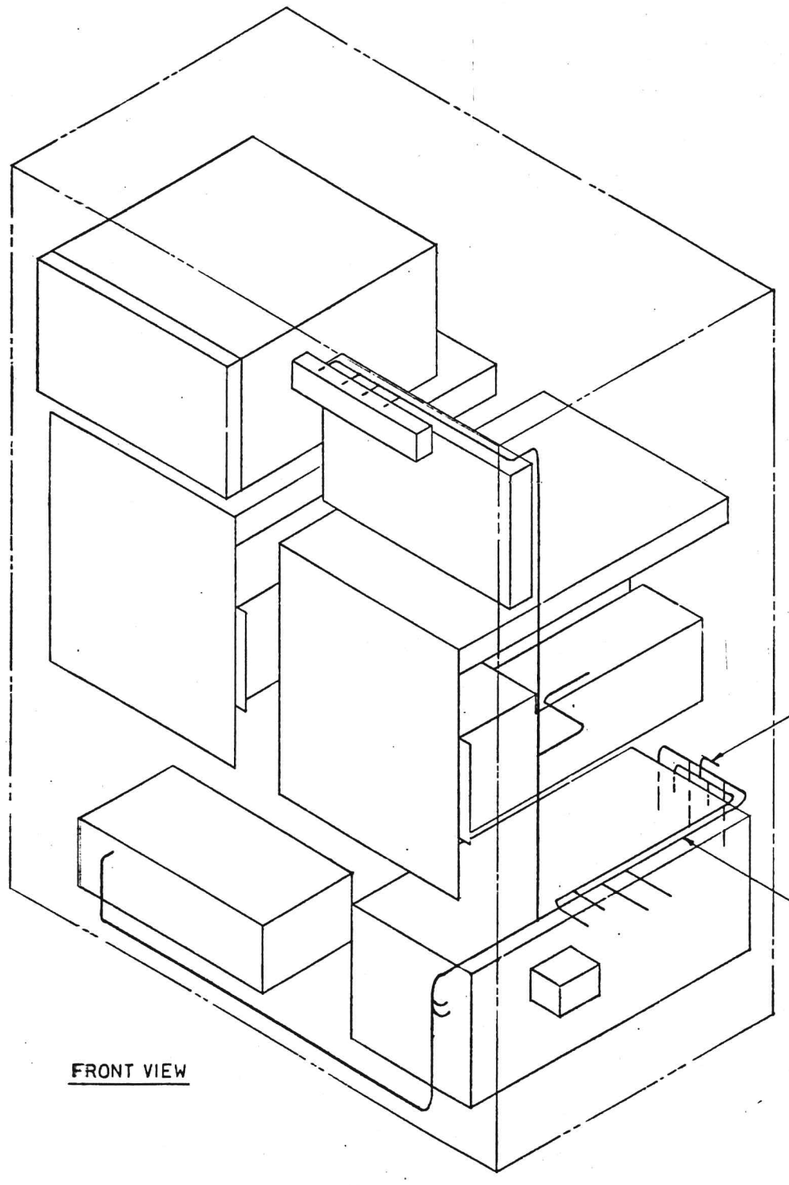

FRONT VIEW

REVISION HISTORY
DATE | ECO NUMBER | REV.

TITLE FRONT END

DOCUMENT NUMBER
SIZE | CODE | NUMBER | REV

OF THIS WITHOUT WRITTEN PERMISSION. THIS IS AN UNPUBLISHED WORK PROTECTED UNDER THE FEDERAL COPYRIGHT LAWS.

HARNESS CONNECTION CHART NO.1				
ITEM NO.	HARNESS TERM POINT	HARNESS TERM CONNECTION	CONNECTION	WITH
43	—	J1	NEXT HIGHER ASSY(KL10-R)	—
↑	—	J2	NEXT HIGHER ASSY(KL10-R)	—
	—	P1	861D REMOTE TURN ON	—
	—	P2	SWITCH PANEL J2	—
	—	P3	↑ J3	—
	—	P4	↑ J4	—
	—	P5	SWITCH PANEL J5	—
	—	P6	11/40 PROCESSOR SU-3	—
	—	P7	863-D - J7	—
	—	P8	J8	—
	—	P9	J3	—
	—	P10	J2	—
43	—	P13	863-D-J13	—

HARNESS CONNECTION CHART NO.2				
ITEM NO.	HARNESS TERM POINT	HARNESS TERM CONNECTION	CONNECTION	WITH
42	—	J1	NEXT HIGHER ASSY(KL10-R)	—
↑	—	J2	NEXT HIGHER ASSY(KL10-R)	—
	—	P5	863-D/J5	—
42	—	P6	863-D/J6	—

CABLE CONNECTIONS

BACKPLANE	CABLE	FROM	TO
DD11-B#2 (ITEM 64)	BC11A-13 (ITEM 69)	SLOT AB04	NEXT HIGHER ASSY (KL10-R)
DD11-B#1 (ITEM 64)	7011025 (ITEM 71)	P1 TO BM873-YJ/J1	P2 TO SWITCH PANEL J1
	BC05L-15 (P/O ITEM 7)	RX02-BA (ITEM 7)	M7846 SLOT CDEF03 (DD11 NO. 1)
	BC27C-09 SEE NOTE6 ITEM 76	M7800 SLOT CDEF02 (P/O)ITEM 61	BULKHEAD (ITEM 9) SEE SH 8
RH11-AB (ITEM 63)	BC06R-12 (ITEM 68)	M5904 SLOT CD04	BULKHEAD RH11 CONNECTOR SLOT A
	BC06R-12 (ITEM 68)	M5904 SLOT CD05	BULKHEAD RH11 CONNECTOR SLOT B
	BC06R-12 (ITEM 68)	M5904 SLOT CD06	BULKHEAD RH11 CONNECTOR SLOT C
MF11-UP (P/O ITEM 2)	BC27C-09 SEE NOTE6 ITEM 76	M7800 SLOT CDEF09 (P/O)ITEM 61)	BULKHEAD (ITEM 9) SEE SH 8
KD11-A (P/O ITEM 2)	BC08R-05 (ITEM 8)	INDICATOR PANEL J2 (P/O ITEM 2)	M7235 SLOT 6 J1
	BC08R-05 (ITEM 8)	INDICATOR PANEL J1 (P/O ITEM 2)	M7231 SLOT 4 J1

} 11/40 DRAWER

OPTIONAL CABLE CONNECTIONS

BACKPLANE	CABLE	FROM		TO
DC20F-AD#2	BC08R-10	M7807 SLOT	J1	H3007#4/J10
	BC08R-10	CDEF01	J2	↑ #4/J11
	BC08R-10	M7147 SLOT	J1	#3/J10
	BC08R-10	CDEF02	J2	↑ #3/J11
	BC08S-10	M5906 SLOT AB07/J1		↑ #4/J9
	BC08S-10	M5906 SLOT AB07/J2		H3007 #3/J9
LP20#0	BC06R-10	M8571 SLOT 3/J1		LP20#0 CONNECTOR SLOT B
LP20#1	BC06R-10	M8571 SLOT 3/J1		LP20#1 CONNECTOR SLOT B
CD11(CD20)	7008764-00	SLOT B02(M957)		CARD READER (VIA BULKHEAD)

BACKPLANE	CABLE	FROM		TO
DB11-M (ITEM 62)	BC11A-17 (ITEM 70)	SLOT AB01		NEXT HIGHER ASSY (KL10-R)
DC20F-AD#1 (ITEM 57)	BC08R-10(P/O ITEM 57)	M7807 SLOT	J1	H3007#2/J10
	BC08R-10(P/O ITEM 57)	CDEF01	J2	H3007#2/J11
	BC08R-10(P/O ITEM 57)	M7147 SLOT	J1	H3007#1/J10
	BC08R-10(P/O ITEM 57)	CDEF02	J2	H3007#1/J11
	BC08S-10(P/O ITEM 57)	M5906 SLOT AB07/J1		H3007#2/J9
	BC08S-10(P/O ITEM 57)	M5906 SLOT AB07/J2		H3007#1/J9

} EXPANSION DRAWER

REVISION HISTORY

REV	ECO NUMBER	DATE

TITLE FRONT END CABINET ASSY

DOCUMENT NUMBER

SIZE	CODE	NUMBER	REV
E	AD	7020327-0-0	A

SCALE 1/4 SHEET 5 OF 11

THIS NOT BE REPRODUCED IN WHOLE OR IN PART OR USED OR DISCLOSED AS A BASIS OF MANUFACTURE OR SALE OF EITHER WITHOUT WRITTEN PERMISSION. THIS IS AN UNPUBLISHED WORK PROTECTED UNDER THE FEDERAL COPYRIGHT LAWS.

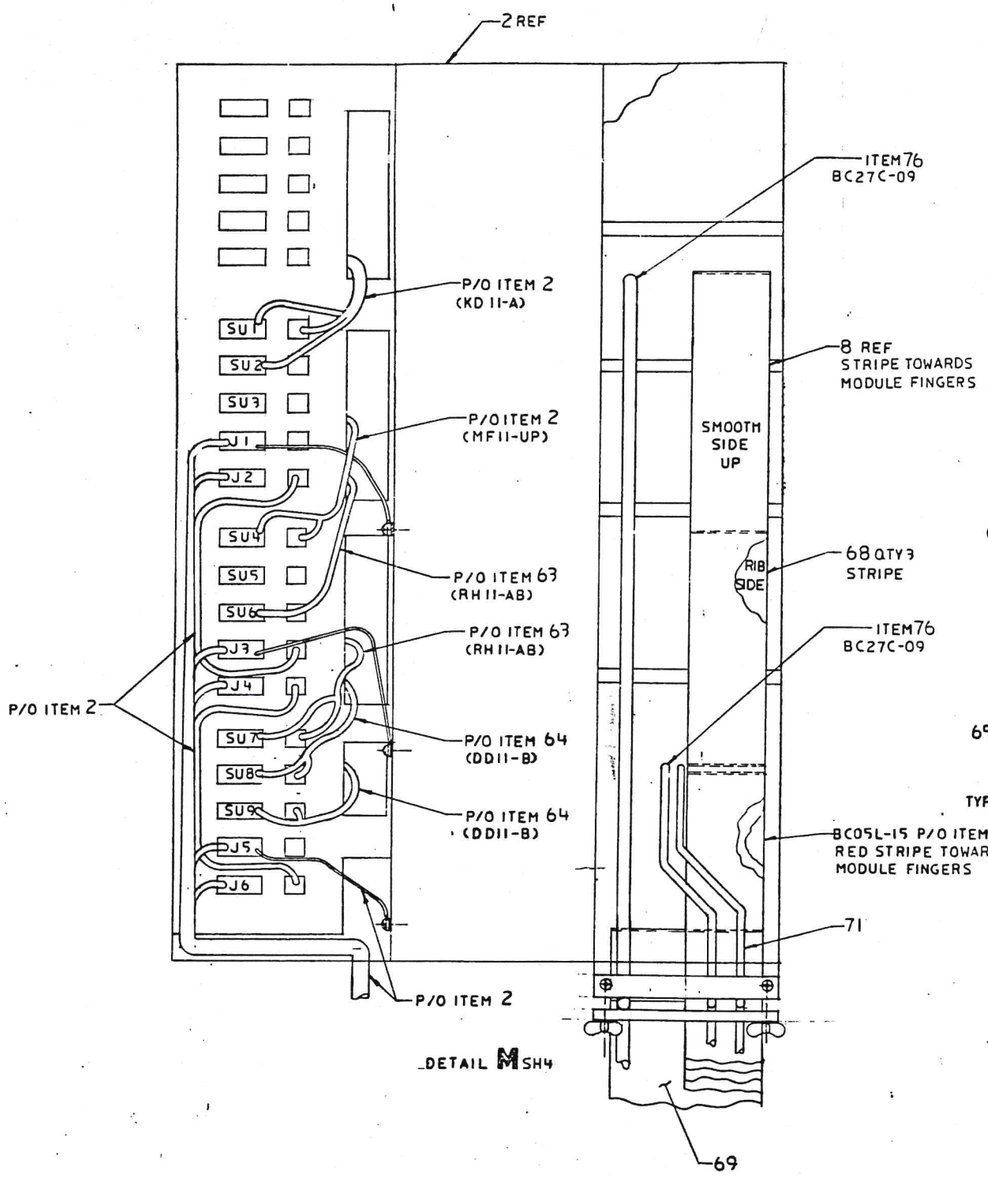

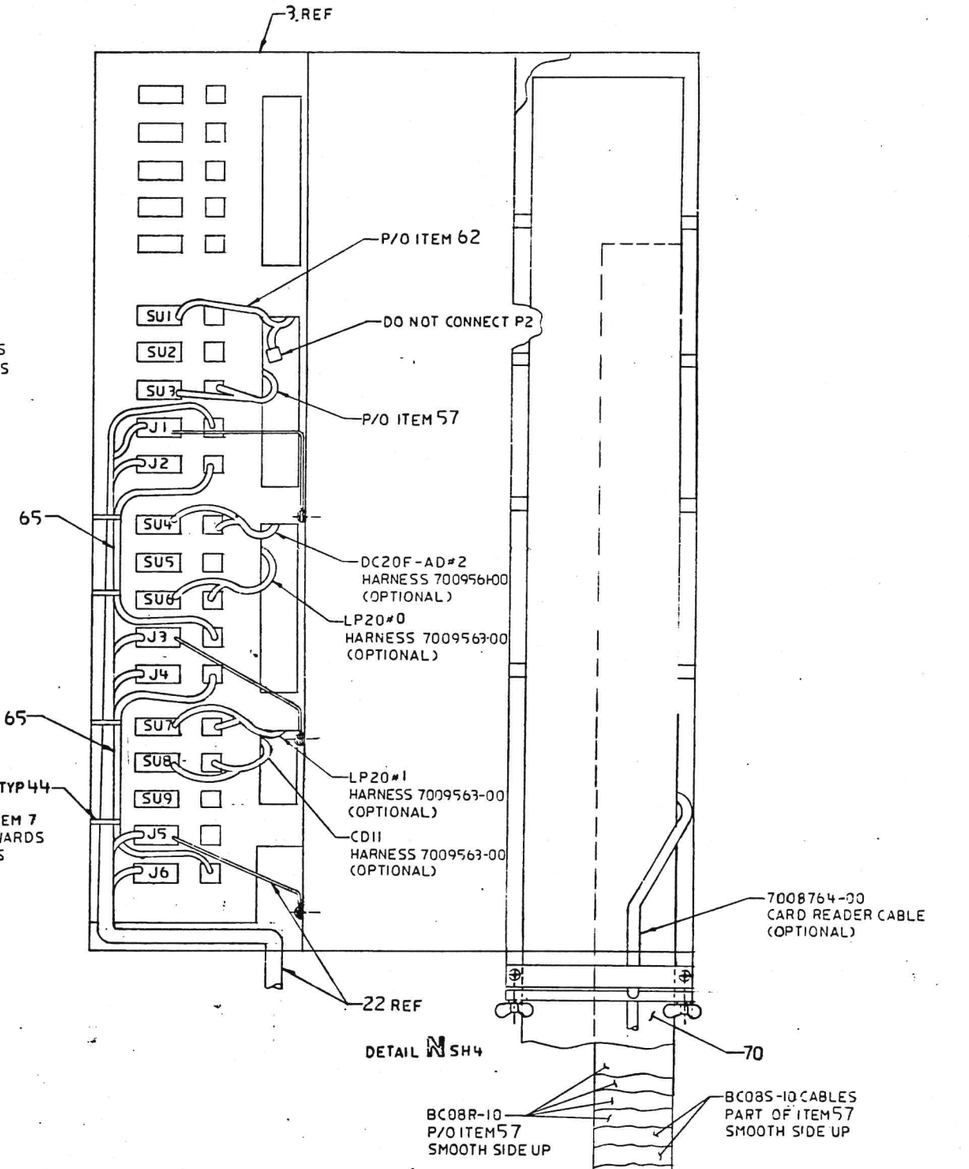

REVISION HISTORY		
REV.	ECO NUMBER	DATE

TITLE FRONT END

DOCUMENT NUMBER
SIZE E | CODE | AD 7020327-0-0 | REV 1

OR IN PART AS THE BASIS FOR THE MANUFACTURE OR SALE OF ITEMS WITHOUT WRITTEN PERMISSION
COPYRIGHT © DIGITAL EQUIPMENT CORPORATION

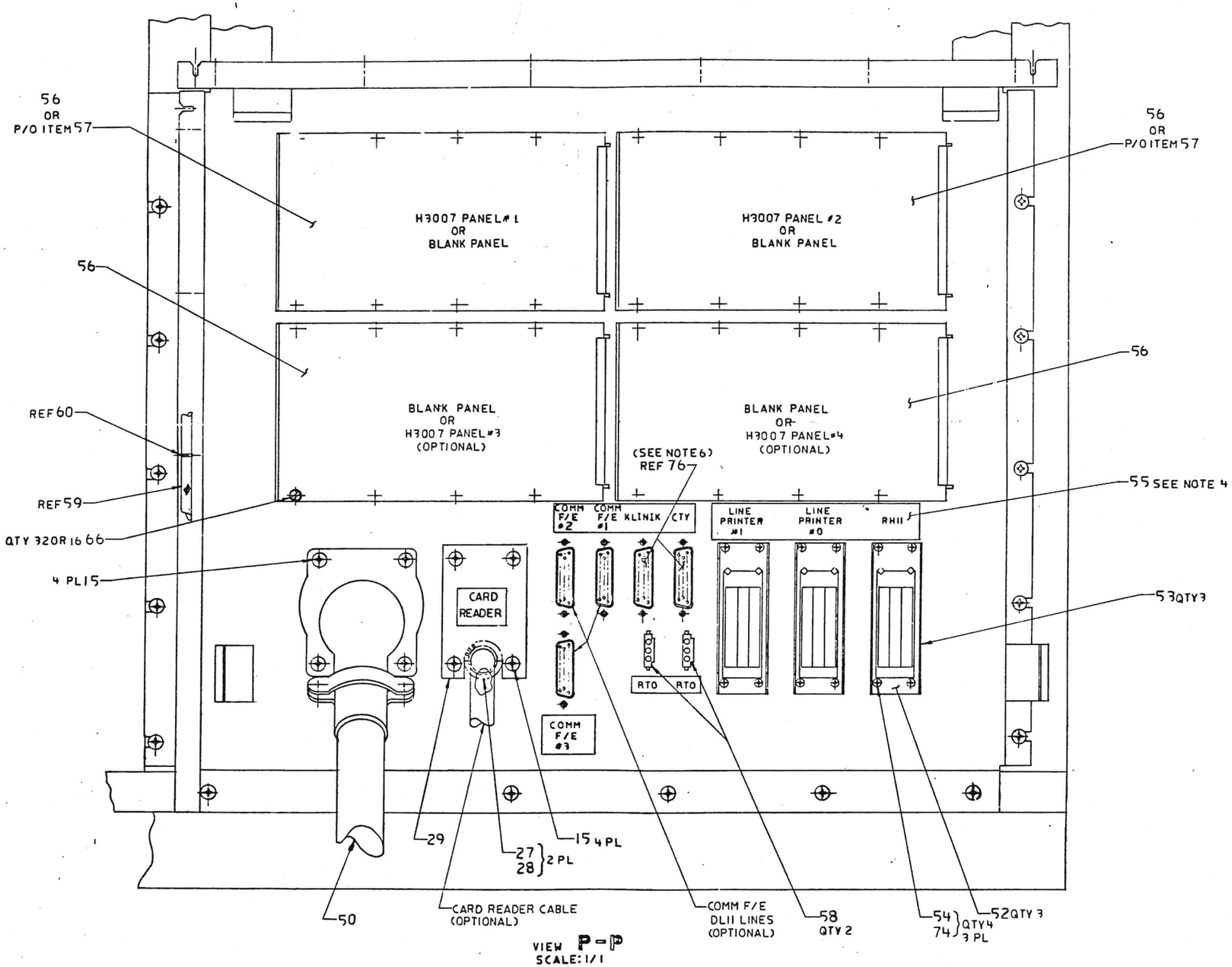

VIEW P-P
SCALE: 1/1

REVISION HISTORY		
DATE	ECO NUMBER	REV

TITLE FRONT END CABINET ASSY

DOCUMENT NUMBER		
SIZE	CODE	NUMBER
E	AD	7020327-0-0

REV A
SCALE
SHEET 2 OF 11

AD 7020327-0-0 A

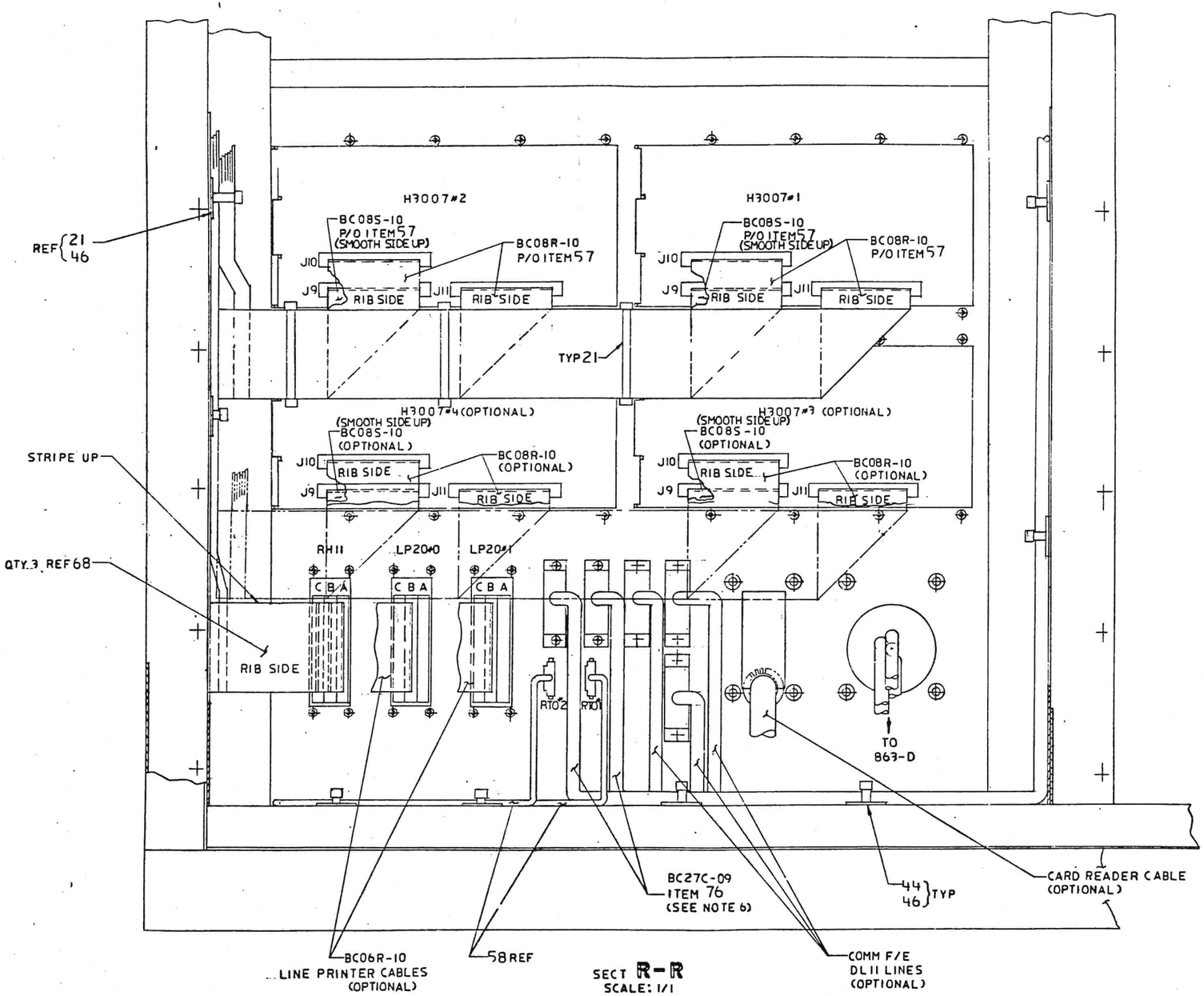

SECT R-R
SCALE: 1/1

REVISION HISTORY		
REV.	ECO NUMBER	DATE

TITLE: FRONT END CABINET ASSY

DOCUMENT NUMBER			
SIZE	CODE	NUMBER	REV
E	AD	7020327-0-0	A

SCALE 1/4 SHEET 9 OF 11

SHALL NOT BE REPRODUCED OR COPIED OR USED IN WHOLE OR IN PART AS THE BASIS FOR THE MANUFACTURE OR SALE OF ITEMS WITHOUT WRITTEN PERMISSION. THIS IS AN UNPUBLISHED WORK PROTECTED UNDER THE FEDERAL COPYRIGHT LAWS.

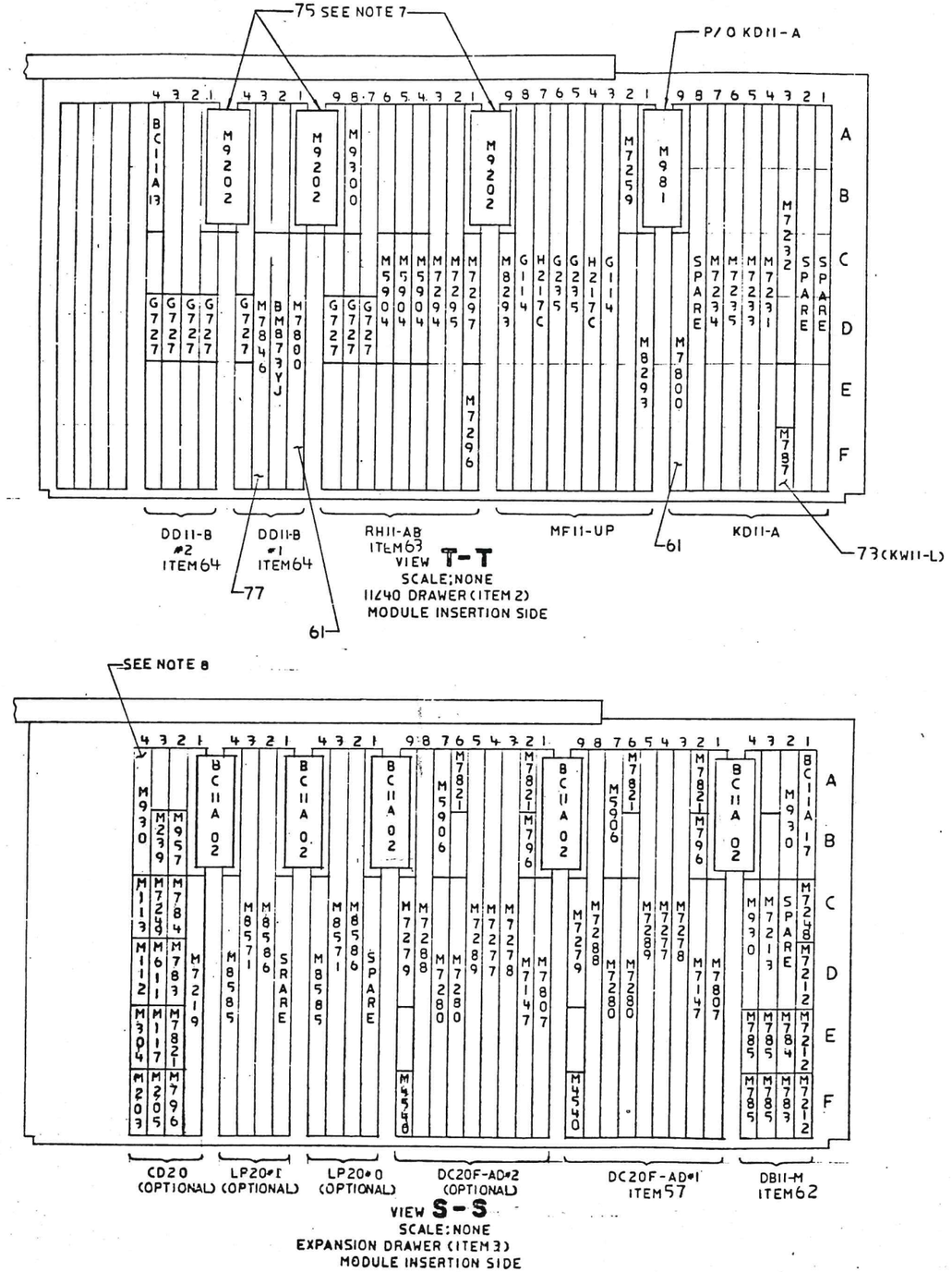

REVISION HISTORY		
REV.	ECO NUMBER	DATE

TITLE FRONT END

DOCUMENT NUMBER			
SIZE	CODE	NUMBER	REV
E	AD	7020327-0-0	A

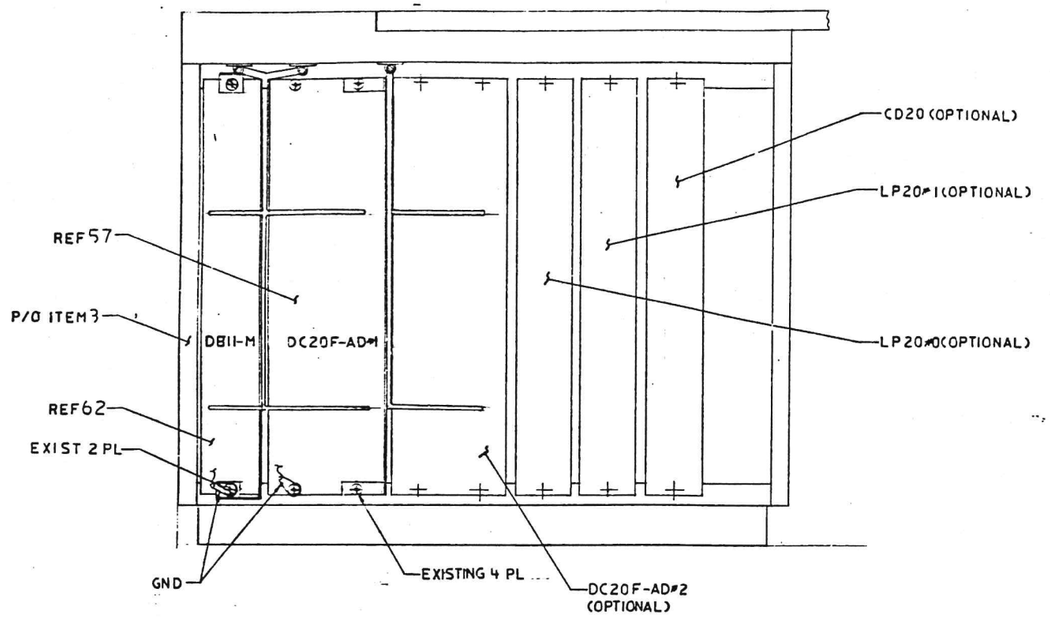

VIEW V-V
SCALE: NONE

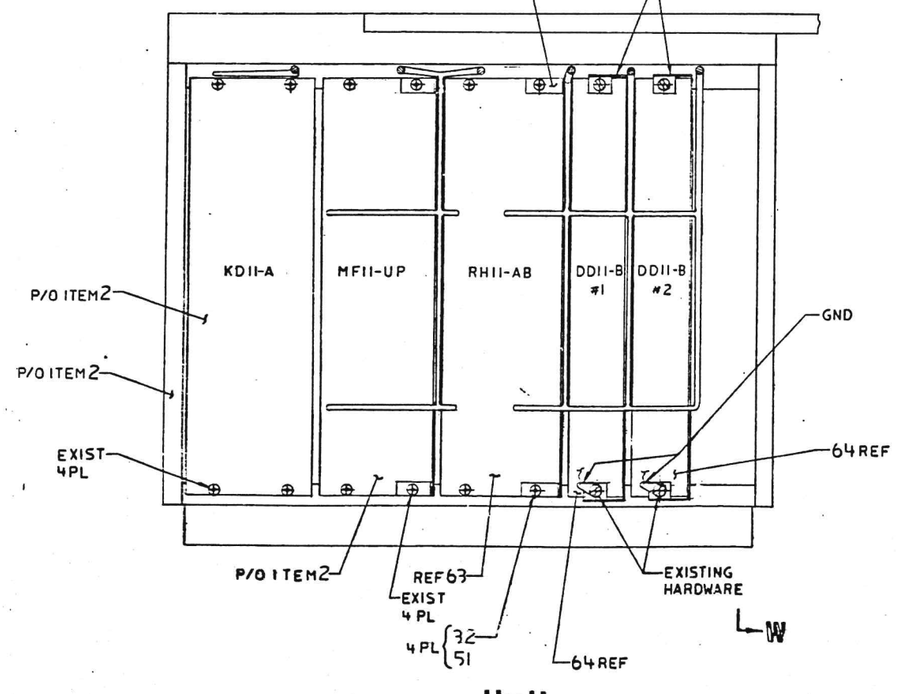

VIEW U-U
SCALE: NONE

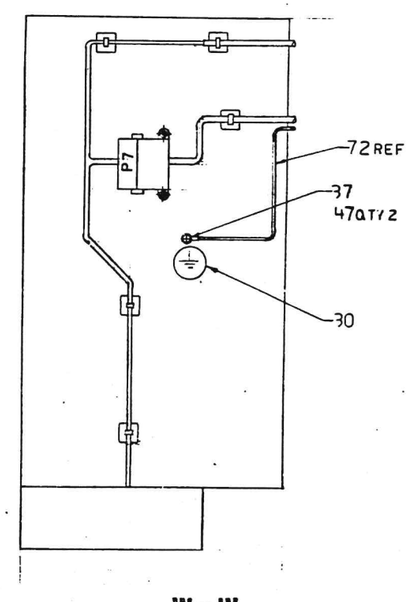

SECT W-W
TYP 2 PL

REVISION HISTORY

REV.	ECO NUMBER	DATE

TITLE FRONT END

DOCUMENT NUMBER

AUTOMATED BY PRTLST.5R(52)

P A R T S L I S T

LINE	ITEM	TOP DOCUMENT	PART NUMBER	MIN REV	DESCRIPTION	QTY PER VARIATION 00 A1	01 A1
1	1	E-AD-7020324-0-DBU	7020324-02		CABINET ASSY, F.E	1	1
2	2	D-UA-11/40-AP-0	11/40-AP		11/40-AK,MM11-UP,120V	1	1
3	3	E-UA-BA11-FB-0	0BA11-FB		MOUNT BOX EXPANSION 11/40	1	1
4	4	E-UA-861-D-0	00861-D		120VAC 24A 3 PHASE POWER CONTROL	1	1
5	5	E-UA-863-D-0	00863-D		863-A W 3 PHASE UNSWITCHED OUTLE	1	1
6	6	E-UA-H7420-A-0	H7420-A		POW SUPPLY HI POW H742-A 115V	1	1
7	7	E-UA-RX02-0-0	0RX02-BA	A	DUAL FLOPPY DISK SYSTEM,1024KB,1	1	1
8	8	C-UA-BC08R-0-0	BC08R-06		H856-H856 3M CABLE(6')	2	2
9	9	E-IA-7020382-0-0	7020382-00		BULKHEAD WELDMENT F.E.	1	1
10	10	D-MD-7409445-0-0	7409445-00		BRACKET, HARNESS SUPPORT	2	2
11	11	D-MD-7411583-0-0	7411583-00	A	BRKT BEZEL MTG (DC76)	2	2
12	12	C-IA-7013059-0-0	7013059-02		GROUND STRAP	2	2
13	13		9007651-00	B	WASHER,LOCK EXTERNAL STEEL	17	17
14	14		9006565-00	C	NUT,HEX EXT TOOTH LCKWSHR 10-32	16	16
15	15		9009700-00	A	SCREW,SEMS TRUSS PHIL 10-	139	139
16	16		9007786-00	F	RETAINER,U-NUT 10-32X	72	72
17	17	C-IA-7406572-0-0	7406572-00		ALTERNATE MEMORY RETAINER	3	3
18	18	C-IA-7429497-0-0	7429497-01		PLATE,NUT	1	1
19	19	D-IA-7409446-0-0	7409446-00		HARNESS, SUPPORT	2	2
20	20	B-MD-7409447-0-0	7409447-00	A	PLATE, SUPPORT	2	2
21	21		9009617-00	A	TIE,CABLE BUNDL.DIA 0-3"TYPE=101	A/R	A/R
22	22	E-IA-7009566-0-0	7009566-00		HARNESS 21 IN BOX POWER	1	1
23	23	E-UA-H744-0-0	0H744-00		POWER REGULATOR	3	3
24	24	E-UA-H745-0-0	0H745-00		POWER REGULATOR	2	2
25	25		9009228-10	A	SCREW,SEMS PAN PHIL 10-	20	20
26	26		9006024-03	A	SCREW,MACH TRUSS PHIL 6-	2	2
27	27		9007036-00	B	GROMMET,CATERPILLAR POLYAMIDE	A/R	A/R
28	28		9007594-00	A	ADHESIVE,NEOPRENE	A/R	A/R

REVISION HISTORY			BASIC PART NO: 7020327
ENG	ECO NUMBER	REV	SECTION A OF A
	INITIAL	A	SECTION.VARIATION INDEX [A]00,01 [B] [C] [D] [E] [F]

DRN: VICKY GUTBIER	DATE: 02-AUG-83	D I G I T A L
CHK'D: JEFF HUSON	DATE: 02-AUG-83	TITLE PARTS LIST F/E CABINET ASSEMBLY
DES.ENG: ROGER SCOTT	DATE: 02-AUG-83	DOCUMENT NUMBER
RESP.ENG.: ROGER SCOTT	DATE: 02-AUG-83	SIZE: K | CODE: PL | NUMBER: 7020327-0-DBP | REV: A
MFG.ENG.: SUE ALMEIDA	DATE: 02-AUG-83	RELEASE DATE:
ASSEMBLY NUMBER: E-AD-7020327-0-0	TOP DOCUMENT NUMBER: K-PL-7020327-0-DBP	FILE NAME: Z7443A.PLS | EDIT #: 5

"THIS DRAWING AND THE SPECIFICATIONS CONTAINED HEREIN ARE CONFIDENTIAL AND PROPRIETARY. THEY ARE THE PROPERTY OF DIGITAL EQUIPMENT CORPORATION AND SHALL NOT BE REPRODUCED OR COPIED OR USED IN WHOLE OR IN PART AS THE BASIS FOR THE MANUFACTURE OR SALE OF ITEMS WITHOUT WRITTEN PERMISSION. THIS IS AN UNPUBLISHED WORK PROTECTED UNDER THE FEDERAL COPYRIGHT LAWS."

MRO

AUTOMATED BY PRTLST.5R(52)

P A R T S L I S T

LINE	ITEM	TOP DOCUMENT	PART NUMBER	MIN REV	DESCRIPTION	QTY PER VARIATION 00 A1	01 A1
29	29	C-MD-7429335-0-DBU	7429335-01	A	PLATE, CABLE COVER	1	1
30	30		3613272-00	B	LABEL,ADH BACK,MYLAR CAP	13	13
31	31		9006231-09	A	SCREW,MACH HEX PLN 10-	6	6
32	32		9006634-00	A	WASHER,LOCK INTERNAL STEEL	8	8
33	33		9006724-00	A	WASHER,LOCK EXTERNAL STEEL	3	3
34	34		9008203-00	A	NUT,HEX EXT TOOTH LCKWSHR 1/4-20	2	2
35	35		9006563-00	A	NUT,HEX EXT TOOTH LCKWSHR 8-32	3	3
36	36	E-MD-7412285-0-0	7412285-00		SHIELD EMI (KL10)	1	1
37	37		9006039-01	A	SCREW,MACH PAN PHIL 8-	6	6
38	38		9006664-00	A	WASHER,FLAT SST	4	4
39	39		3622062-01	A	LABEL,STABILITY 11/780	2	2
40	40	C-IA-7013059-0-0	7013059-01		GROUND STRIP	1	1
41	41	C-IA-7013059-0-0	7013059-08		STRAPGROUND	1	1
42	42	J-IA-7020840-0-0	7020840-01		HARNESS FRONT END FAULT INDIC	1	1
43	43	J-IA-7020839-0-0	7020839-01		HARNESS FRONT END SWITCH PANEL	1	1
44	44		9007032-00		TIE,CABLE BUNDL.DIA 0-1-3/4"=101	A/R	A/R
45	45		3617674-00	E	LABEL,SERIAL/POWER W/O UL + CSA	1	1
46	46		9008264-00	A	MOUNT, CABLE TIE, ADHESIVE BACKE	A/R	A/R
47	47		9008072-00	A	WASHER,LOCK EXTERNAL STEEL	10	10
48	48		1211215-00	A	CLAMP,CABLE SCREW MNT ACCOM	2	2
49	49		9006045-01	A	SCREW,MACH PAN PHIL 8-	4	4
50	50	D-IA-7020715-0-0	7020715-01		CABLE PRIMARY POWER 60 HZ KL10R	1	1
51	51		9006043-01	A	SCREW,MACH PAN PHIL 8-	4	4
52	52	D-AD-7009861-0-0	7009861-00	A	RECEPT HOUSING ASSY-RP04	3	3
53	53	C-MD-7428177-0-DBU	7428177-01	A	SHIELD,RECEPTACLE	3	3
54	54		9006013-01	A	SCREW,MACH PAN PHIL 4-	12	12
55	55		3622338-01		LABEL,FRONT END BULKHEAD SET	1	1
56	56	D-MD-7426406-02-DBU	7426406-02	A	PANEL,OCTAL (MASTER)	2	4
57	57	K-PL-DC20F-0-DBP	DC20F-AD		FCC COMPLIANT DC20-AA + DC20-DA	1	-
58	58	C-IA-7021175-0-0	7021175-04		CABLE INTERNAL, RTO	2	2
59	59		1220105-01		GASKET,EMI .25"OD	40	40
60	60		1221535-01	A	CLIP,NYLON FOR RF GASKET	92	92
61	61		ODL11-M		M7800 RS232 FULL MODEM CONTROL E	2	2
62	62	C-UA-DB11-M-0	ODB11-M		UNIBUS REPEATER	1	1
63	63	D-UA-RH11-0-0	ORH11-AB		RS03 CONTROL UP TO 16 DUAL PORT	1	1
64	64	B-DD-DD11-B-0	ODD11-B		CARD CONTROL , MOUNTING PANEL	2	2
65	65	D-IA-7009573-0-0	7009573-C0		HARNESS 6 PIN JUMPER	2	2
66	66		1219534-01		SCREW, CAPTV SLOT 4-	16	32
67	67	C-MD-7413983-0-0	7413983-00		CLAMP WIRE BASKET	6	6
68	68	D-UA-BC06R-0-0	BC06R-12		CABLE I/O 12FT (MJ11)	3	3
69	69	D-UA-BC11A-0-0	BC11A-13		M919 TO M929 FLAT MYLAR EXTERNAL	1	1
70	70	D-UA-BC11A-0-0	BC11A-17		CABLE	1	1
71	71	C-IA-7011025-0-0	7011025-00		MAINT CABLE ASSY	1	1
72	72	C-IA-7013059-0-0	7013059-07		GROUND STRIP	3	3
73	73	B-DD-KW11-L-0	OKW11-L		CLOCK LINE FREQUENCY INTERVAL	1	1
74	74		9006688-00	A	WASHER,HELICAL SPLIT SST	12	12

DIGITAL	TITLE	SECTION	SIZE	CODE	DOCUMENT NUMBER	REV
	F/E CABINET ASSEMBLY	A OF A	K	PL	7020327-0-DBP	A

MRO

AUTOMATED BY PRTLST.5R(52)

P A R T S L I S T

LINE	ITEM	TOP DOCUMENT	PART NUMBER	MIN REV	DESCRIPTION		QTY PER VARIATION 00 A1	01 A1
75	75	D-UA-M9202-0-0	M9202-00		CABLE UNIBUS JUMPER		3	3
76	76	D-UA-BC27C-0-0	BC27C-09		9 FT CABLE,BC05C-10,7426407-09	F	2	2
77	77	D-UA-M7846-0-0	M7846-00		RX01 UNIBUS INTERFACE,QUAD		1	1
78	78	D-IA-7010167-0-0	7010167-00		SUPPORT HARNESS (11/40)		1	1
79	79	C-IA-7011960-0-0	7011960-00		SUPPORT HARNESS		2	2
80	80		9007867-00		MOUNT, PUSH,CABLE TIE		A/R	A/R
81	81		1209340-00	F	MATE-N-LOK 08SKT(1X08).	HSG	2	2

DIGITAL	TITLE	SECTION	SIZE	CODE	DOCUMENT NUMBER	REV
	F/E CABINET ASSEMBLY	A OF A	K	PL	7020327-0-DBP	A

MRO

PART NO	VARIATION	REV
7020325-00	AS SHOWN	A1
7020325-01	SAME AS-00 MINUS ALL MEMORY PARTS	A1

NOTES:

1. ALL HOLE LOCATIONS ARE DESIGNATED BY AN ASTERISK - BOTTOM HOLE IS HOLE NO. 0.
2. ALL NINE LABELS FOR THE I/O BULKHEAD ITEM(86) WILL COME ON ONE SHEET. PEEL OFF INDIVIDUAL LABELS AND APPLY WHERE SHOWN. (SH5)
3. LABEL ALL H7420 POWER CORDS USING BRADY MARKERS AS FOLLOWS:

   H7420 #1 → 30
   H7420 #2 → 28
   H7420 #3 → 29

   LABEL 2 EXTENSION CORDS ITEM(73) USING BRADY MARKERS AT BOTH ENDS. LABEL ONE CORD 24 (BOTH ENDS) AND THE OTHER 26 (BOTH ENDS)
4. INSTALL JUMPERS ITEM 54 IN THE FOLLOWING PLACES TO IDENTIFY CONTROLLERS.

   MF20 #1 CONTROLLER NO. 10
   NO JUMPERS
   MF20 #2 CONTROLLER NO. 11
   JUMPER PIN A4N1 TO GROUND

   ALSO BOTH MF20'S REQUIRE A JUMPER FROM PIN F7N1 TO GROUND (SIGNAL DESEL CYC DISABLE.)

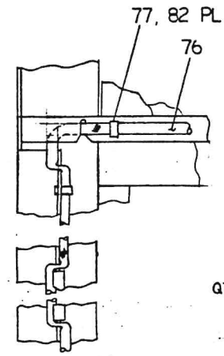

DETAIL H
TYP GASKET SCHEME
SCALE: NONE

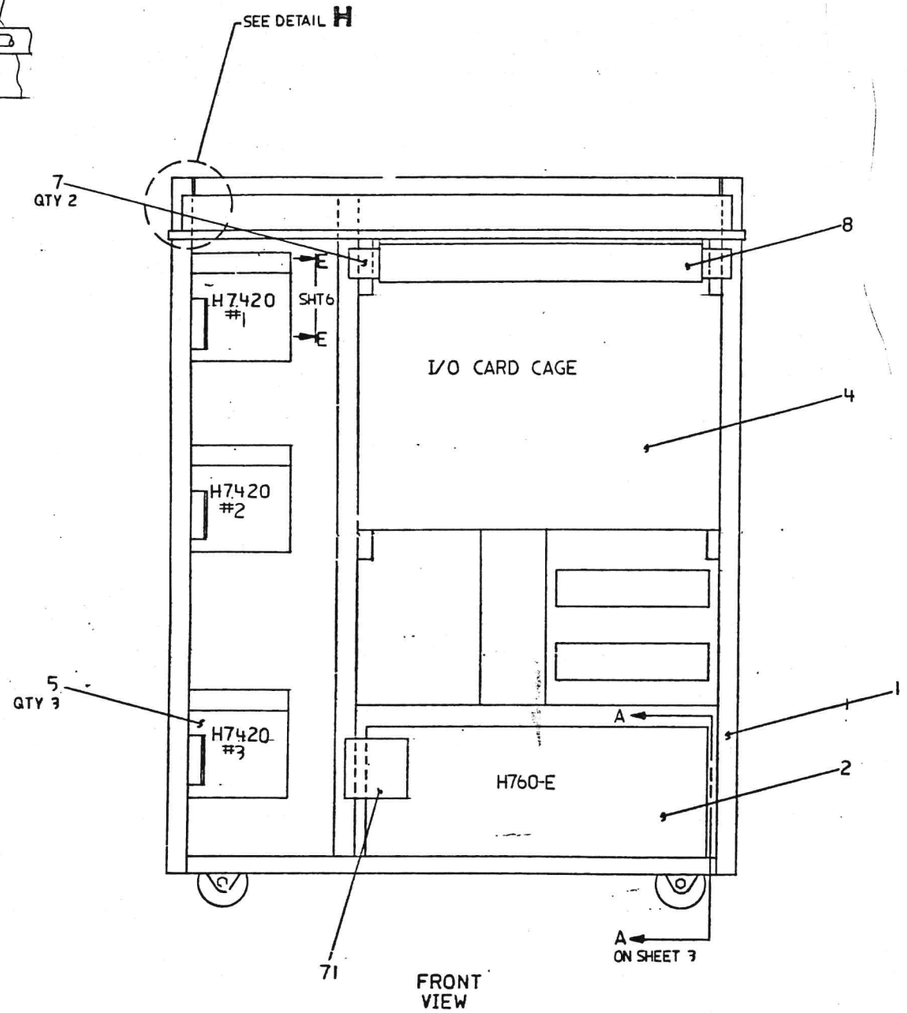

FRONT VIEW

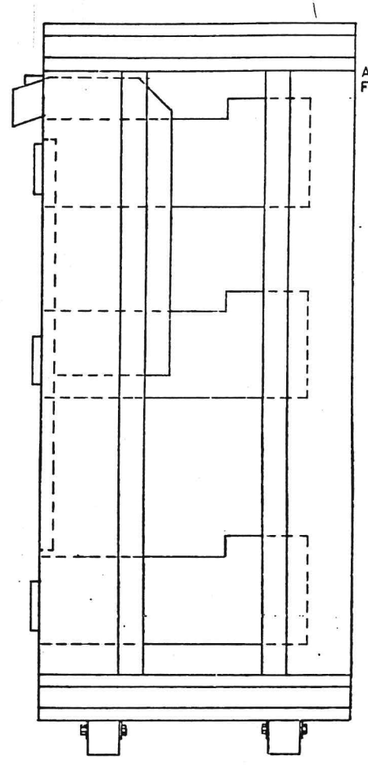

RIGHT VIEW

CAUTION: OFF SHEETS PARTS LIST EXISTS
SEE K-PL-7020325-0-DBP

DESCRIPTION	DRAWING NO.	PART NO.	ITEM NO.

UNLESS OTHERWISE SPECIFIED DIMENSIONS ARE IN INCHES AND THE FOLLOWING TOLERANCES APPLY (PER DEC STD 114)

INCHES TOLERANCES	ANGLES ± 0° 30'	APPLICABLE DIMENSION RANGE	DIMENSION RANGE IN INCHES					
.X = ± .1	SURFACE QUALITY	CHECK CHG	OVER 0 TO 1.2	OVER 1.2 TO 4.0	OVER 4.0 TO 12.0	OVER 12.0 TO 40.0	OVER 40.0 TO 80.0	
.XX = ± .02			± .02	± .03	± .05	± .10		
.XXX = ± .005	MICROINCHES		± .004	± .005	± .012	± .015	± .04	

QUANTITY & VARIATION

THIRD ANGLE PROJECTION

DO NOT SCALE DRAWING

REMOVE BURRS AND BREAK SHARP CORNERS

MATERIAL: SEE PARTS LIST

FINISH: NONE

DRN J. HUSON	DATE 24 AUG 82	TITLE digital I/O CAB ASSEMBLY
CHK'D R. SCOTT	DATE 8/13/83	
DES-ENG	DATE 18 AUG 83	
PROJ ENG	DATE 15 AUG 83	
MFG ENG	DATE 23 AUG 83	DOCUMENT NUMBER: SIZE E, CODE A, NUMBER 7020325-0-0, REV A

NEXT HIGHER DOC: E-AD-7020325-0-0

REVISION HISTORY: DATE | ECO NUMBER | REV

THIS DRAWING AND SPECIFICATION, EITHER ARE PROPERTY OF DIGITAL EQUIPMENT CORPORATION AND SHALL NOT BE REPRODUCED OR COPIED OR USED IN WHOLE OR IN PART AS THE BASIS FOR THE MANUFACTURE OR SALE OF ITEMS WITHOUT WRITTEN PERMISSION.
COPYRIGHT © 1983 DIGITAL EQUIPMENT CORPORATION

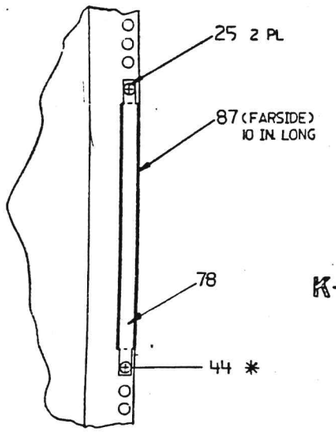

VIEW K-K

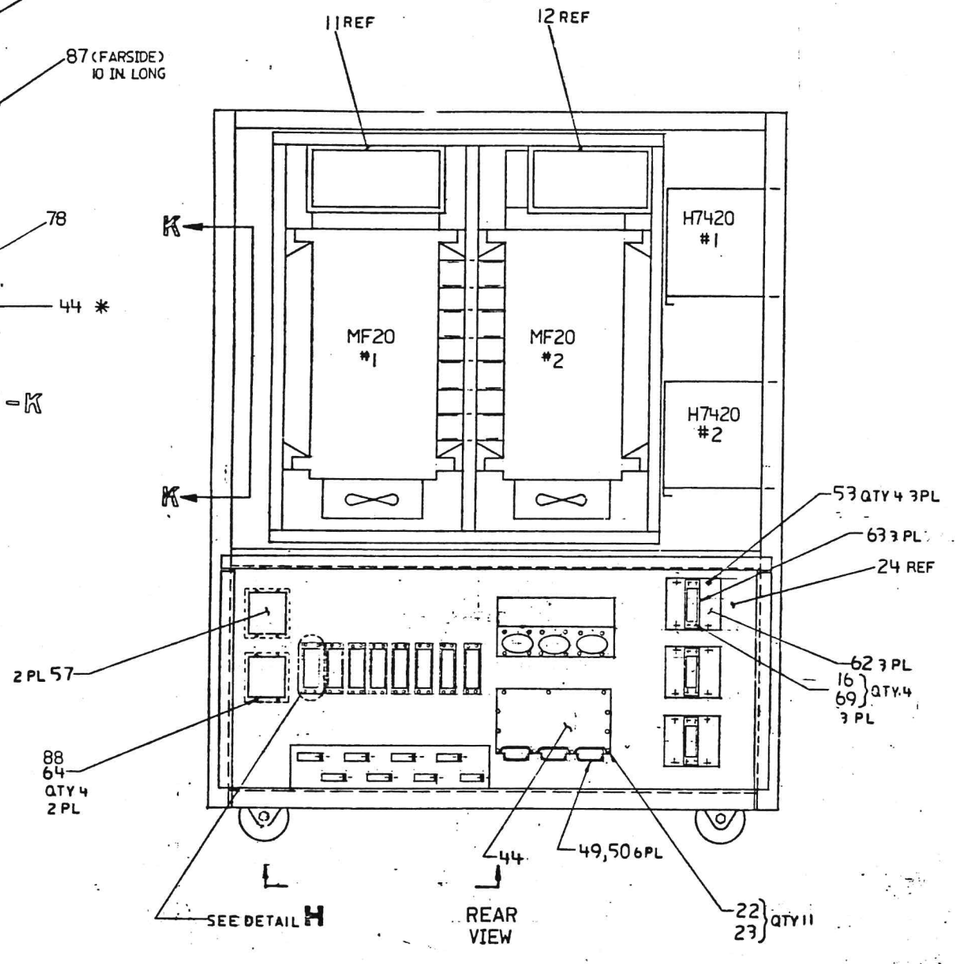

REAR VIEW

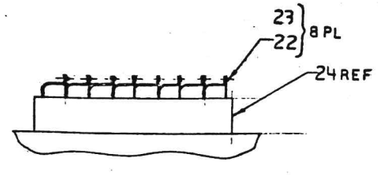

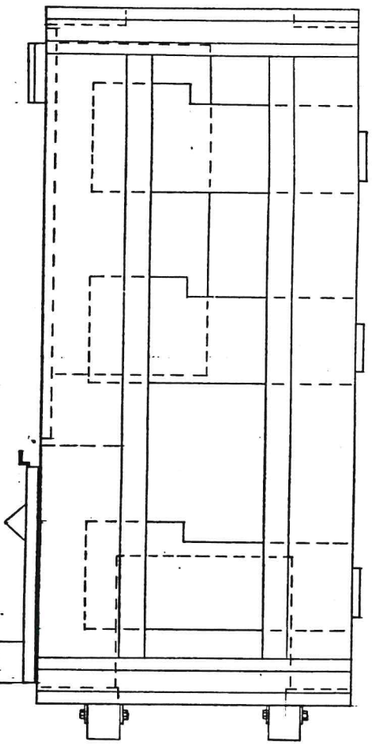

LEFT VIEW

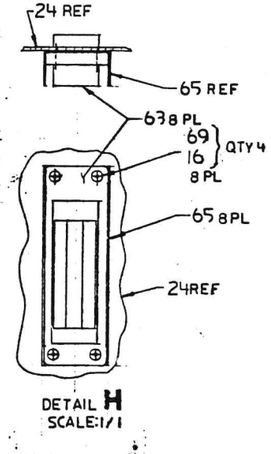

DETAIL H
SCALE: 1/1

REVISION HISTORY		
DATE	ECO NUMBER	REV

TITLE	DOCUMENT NUMBER	
	SIZE CODE	REV

OR IN PART AS THE BASIS FOR THE MANUFACTURE OR SALE OF ITEMS WITHOUT WRITTEN PERMISSION.
COPYRIGHT © 1979 DIGITAL EQUIPMENT CORPORATION

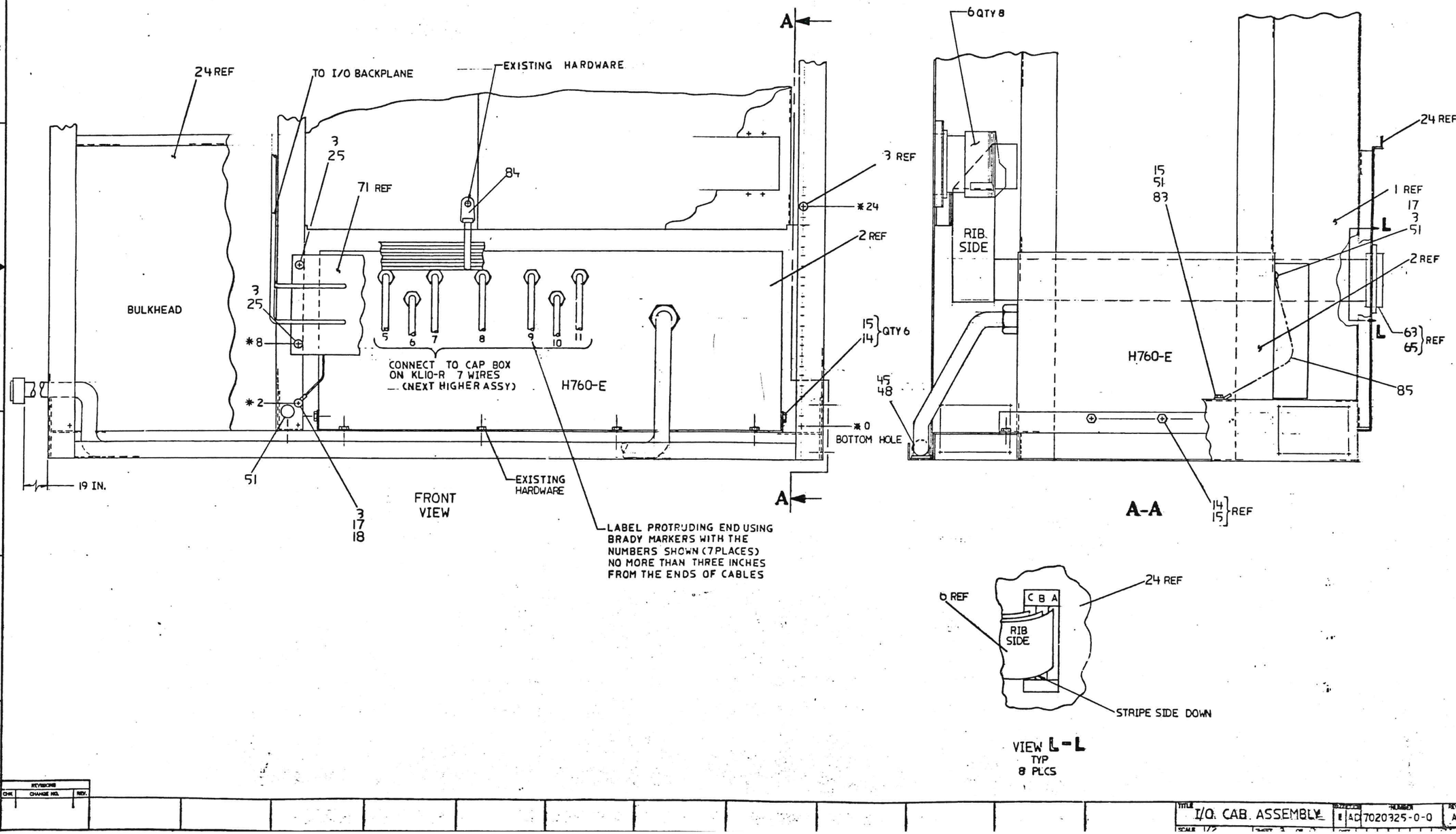

REVISIONS		
ECH	CHANGE NO.	REV.

TITLE	SIZE	NUMBER	REV.
I/O CAB. ASSEMBLY	B	AC 7020325-0-0	A

THE INFORMATION AND DESCRIPTIVE MATERIAL ARE THE PROPERTY OF DATA GENERAL CORPORATION AND SHALL NOT BE REPRODUCED IN WHOLE OR IN PART OR USED FOR THE MANUFACTURE OR SALE OF THINGS WITHOUT WRITTEN PERMISSION.
COPYRIGHT © 1973, DATA GENERAL CORPORATION

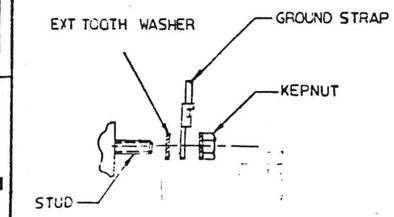

DETAIL F

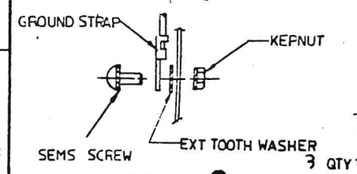

DETAIL G
TYPICAL GROUND SCHEMES

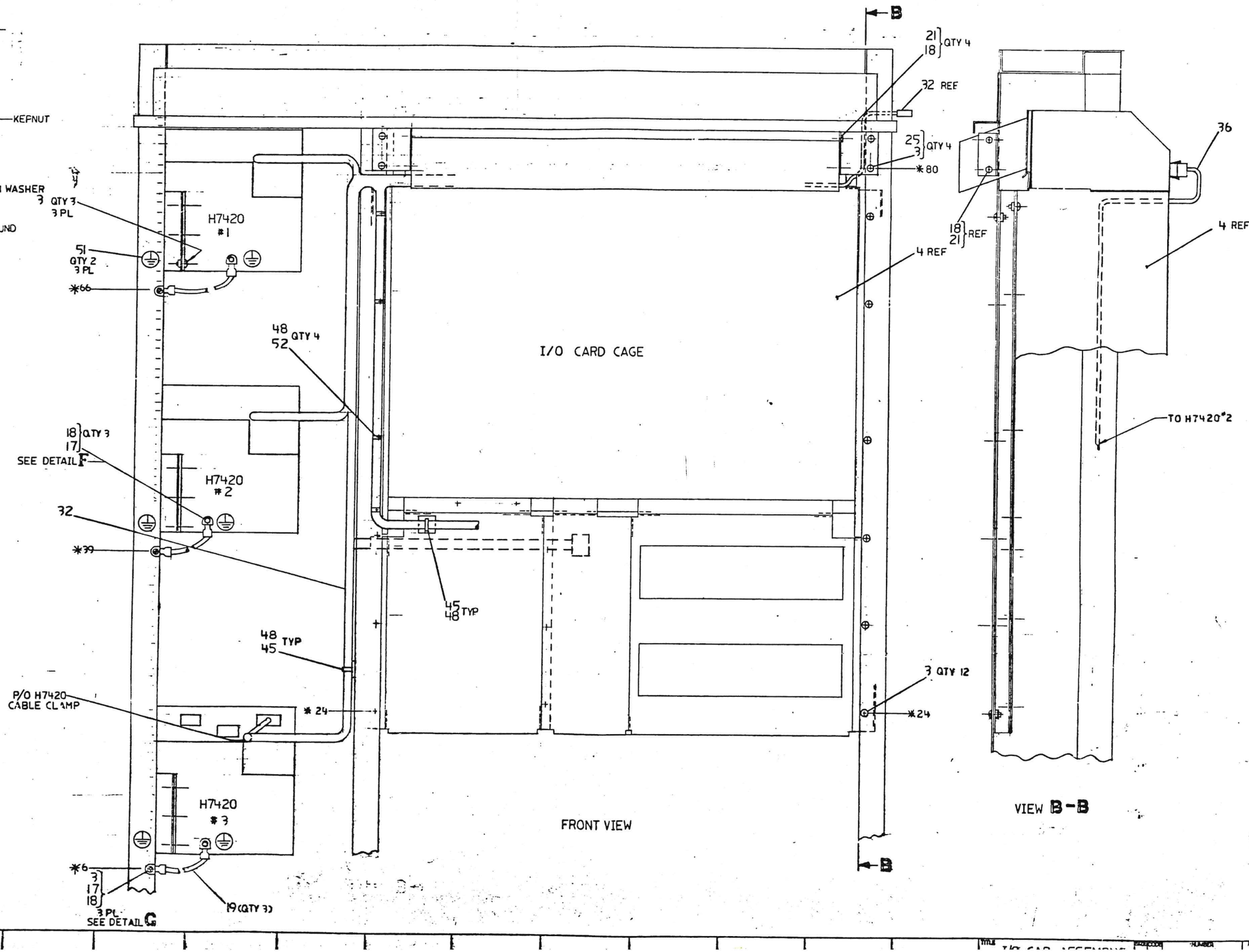

VIEW B-B

REVISIONS		
ZONE	CHANGE NO.	REV.

TITLE I/O CAR ASSEMBLY

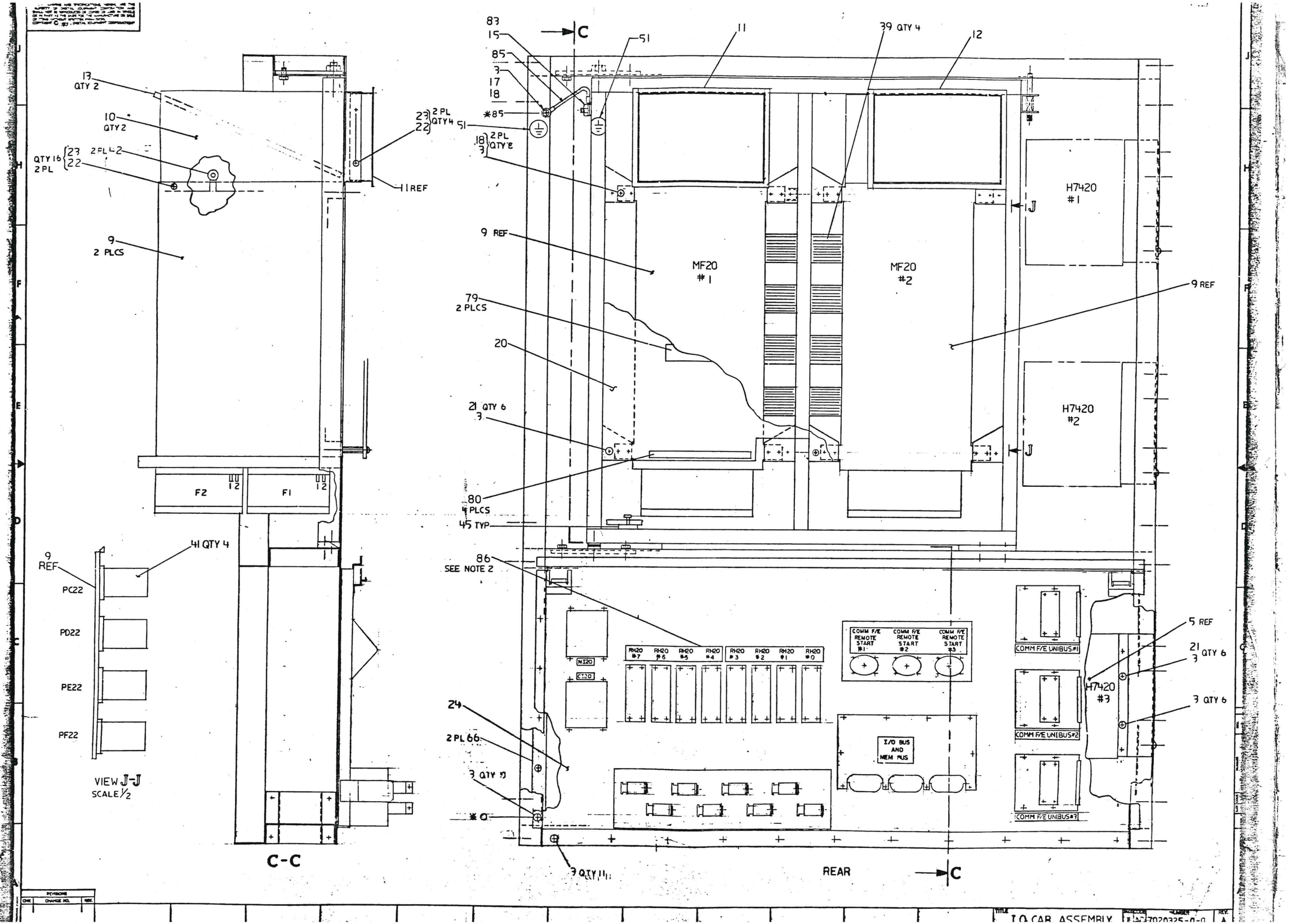

13 QTY 2
10 QTY 2
QTY 16 2 PL
23 22
2 PL
23 22 2 PL QTY 4
11 REF
9 2 PLCS
F2
F1
41 QTY 4
9 REF
PC22
PD22
PE22
PF22
VIEW J-J
SCALE 1/2
C-C
83
15
85
3
17
18
*85
51
18 3 2 PL QTY 8
C
51
11
39 QTY 4
12
9 REF
MF20 #1
MF20 #2
H7420 #1
H7420 #2
H7420 #3
J
79 2 PLCS
20
21 QTY 6 3
80 4 PLCS
45 TYP
86 SEE NOTE 2
NI20
CI20
RH20 #7
RH20 #6
RH20 #5
RH20 #4
RH20 #3
RH20 #2
RH20 #1
RH20 #0
COMM F/E REMOTE START #1
COMM F/E REMOTE START #2
COMM F/E REMOTE START #3
COMM F/E UNIBUS #1
COMM F/E UNIBUS #2
COMM F/E UNIBUS #3
I/O BUS AND MEM BUS
5 REF
21 3 QTY 6
3 QTY 6
24
2 PL 66
3 QTY 9
*0
3 QTY 11
REAR
C
REVISIONS
CHK
CHANGE NO.
REV.
TITLE
I.O. CAB ASSEMBLY
SIZE
NUMBER
REV.
A

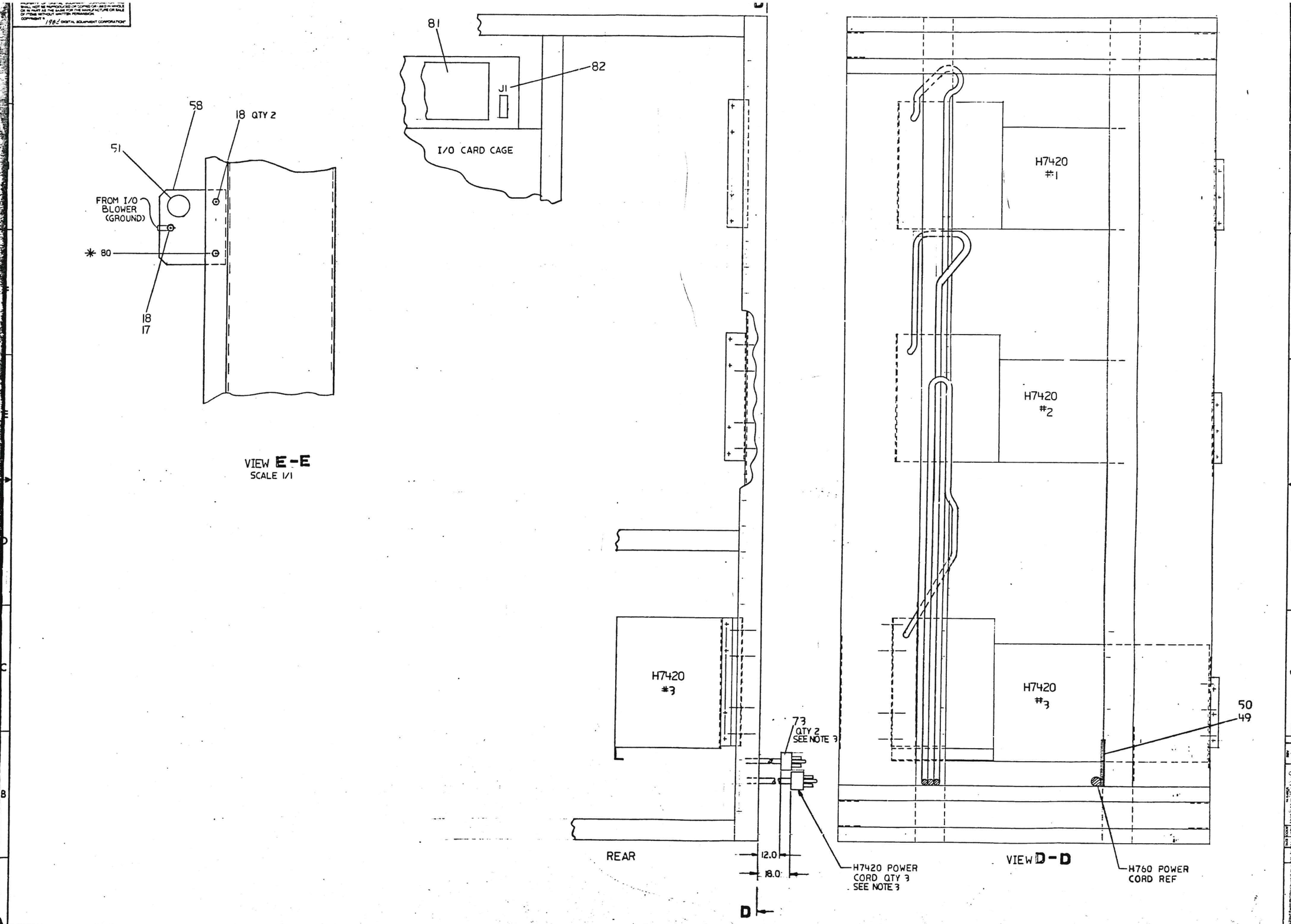

REVISION HISTORY

DATE	ECO NUMBER	REV.

TITLE I/O CAB ASSY

DOCUMENT NUMBER

SIZE	CODE	NUMBER	REV.
E	AD	7020325-0-0	A

COPYRIGHT © 1983 DIGITAL EQUIPMENT CORPORATION

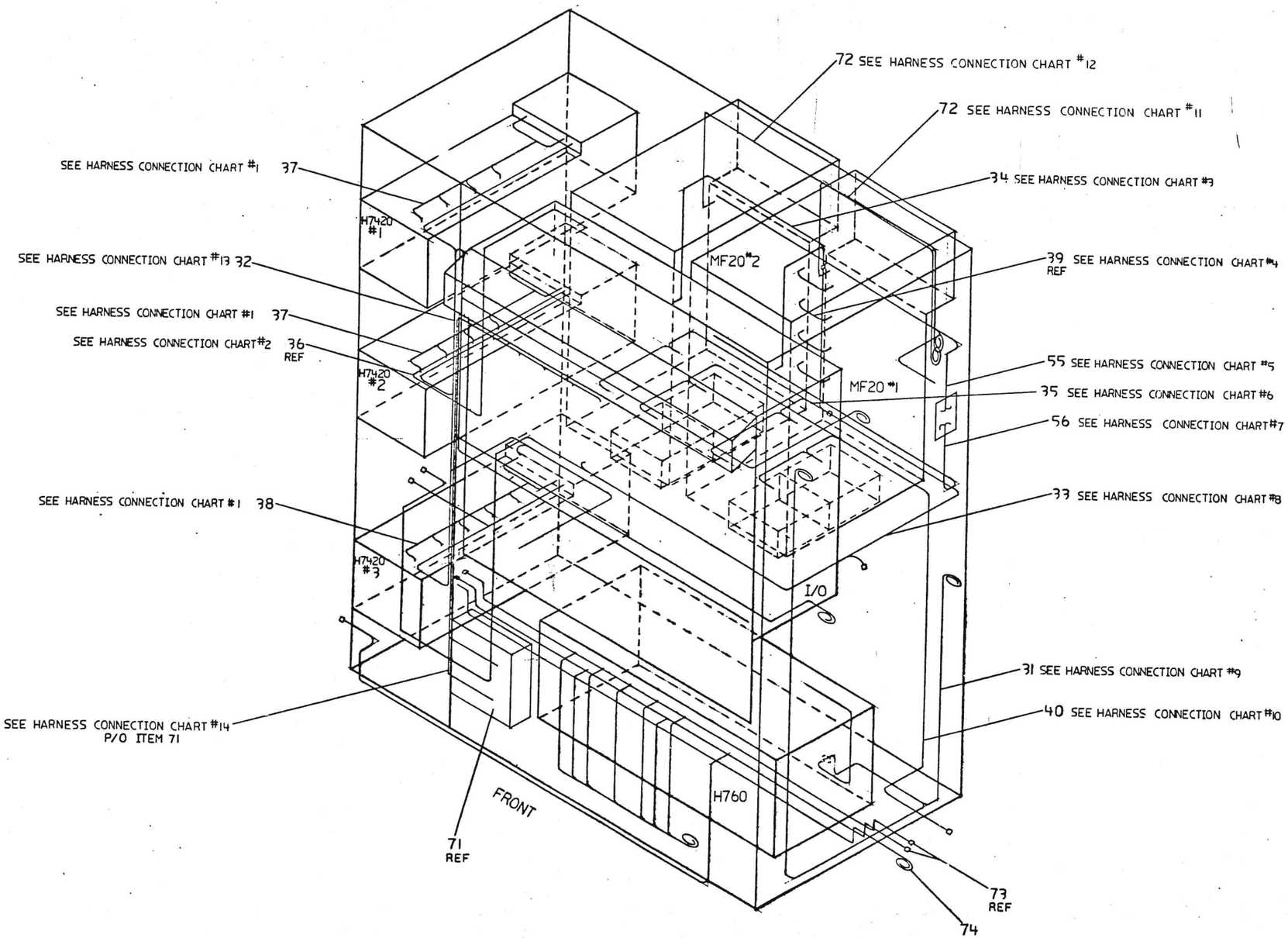

GENERAL HARNESS LOCATION & ROUTING

REVISION HISTORY		
DATE	ECO NUMBER	REV.

DOCUMENT NUMBER

THIS DRAWING AND SPECIFICATIONS, HEREIN, ARE THE PROPERTY OF DIGITAL EQUIPMENT CORPORATION AND SHALL NOT BE REPRODUCED OR COPIED OR USED IN WHOLE OR IN PART AS THE BASIS FOR THE MANUFACTURE OR SALE OF ITEMS WITHOUT WRITTEN PERMISSION.
COPYRIGHT © 1983 DIGITAL EQUIPMENT CORPORATION

H7420 #1

H744 4 — P2
H744 3 — P3
H744 2 — P4
H744 1 — P5

75

P/O ITEM 32
TO I/O B/P

H7420 #2

H744 4 — P6
H744 3 — P7
H744 2 — P8
H744 1 — P9

75

P/O ITEM 32
TO I/O B/P

H7420 #3

H7770 — P10
H745 — P11
H744 3 — P12
H744 2 — P13
H744 1 — P14

67 QTY 2
15 PLACES
61
60
59 QTY 11

P/O ITEM 32
TO I/O B/P

HARNESS CONNECTION CHART #1

ITEM NO.	HARNESS TERM POINT	CONNECTION	CONNECTION	WITH
37	16		P2-6	
	15		P2-7	
	14		P3-6	
	13		P3-7	
	12		P4-6	
	11		P4-7	
	10		P5-6	
	9		P5-7	
		P2	H7420 #1-J2	
37		P3	H7420 #1-J3	
37	16		P6-6	
	15		P6-7	
	14		P7-6	
	13		P7-7	
	12		P8-6	
	11		P8-7	
	10		P9-6	
	9		P9-7	
		P2	H7420 #2-J2	
37		P3	H7420 #2-J3	
38	20		P10-7	
	19		P10-8	
	18		P11-6	
	17		P11-8	
	16		P12-6	
	15		P12-7	
	14		P13-6	
	13		P13-7	
	12		P14-6	
	11		P14-7	
		P2	H7420 #3-J2	
38		P3	H7420 #3-J3	
H7420 #1 RED		H7420 #1 FANS	ITEM 37 P2-7	
H7420 #1 WHT			ITEM 37 P2-3	
H7420 #2 RED		H7420 #2 FANS	ITEM 37 P3-7	
H7420 #2 WHT			ITEM 37 P2-3	
H7420 #3 RED		H7420 #3 FANS	ITEM 38 P2-7	
H7420 #3 WHT			ITEM 38 P2-3	

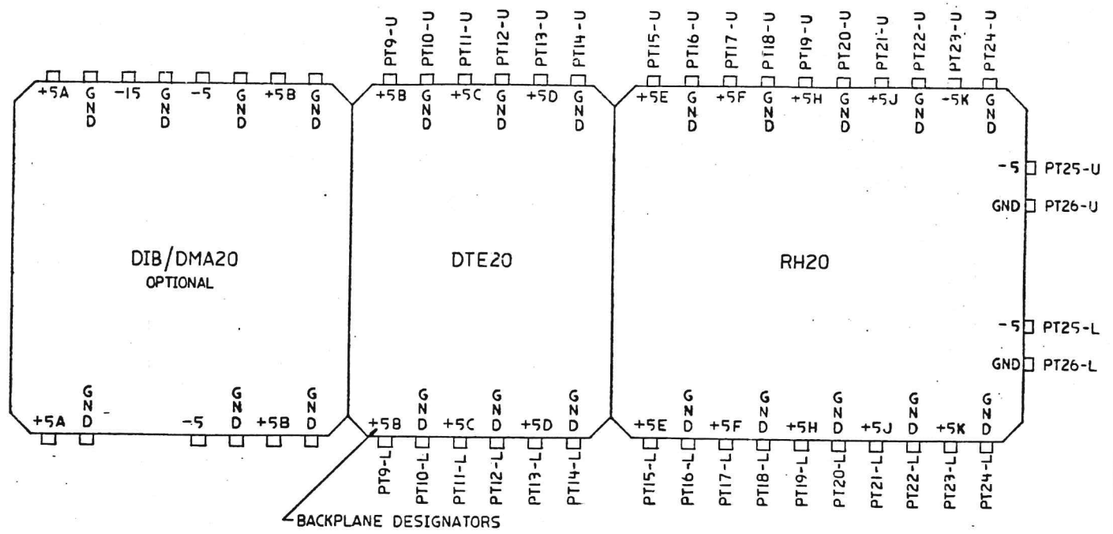

I/O BACKPLANE

PIN SIDE

TYPICAL MF20 MODULE UTILIZATION
FOR BOTH MF20#1 & MF20#2

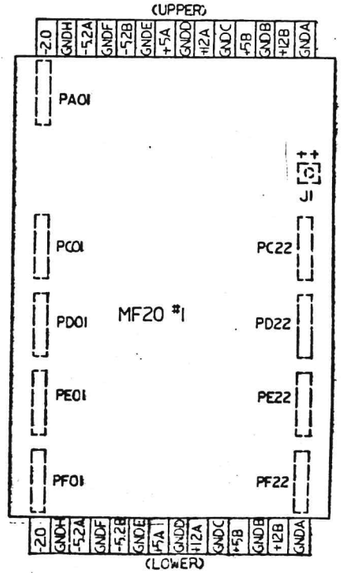

MF20 WIRED ASSEMBLY
VIEWED FROM PIN SIDE
SCALE: NONE

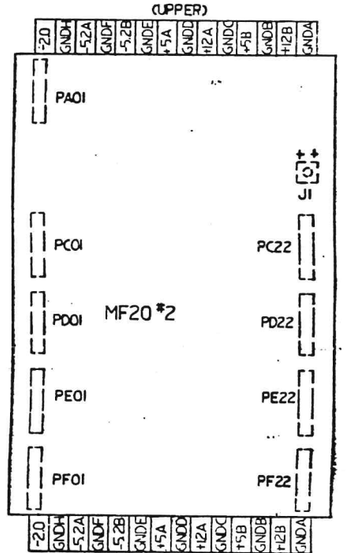

MF20 WIRED ASSEMBLY
VIEWED FROM PINSIDE
SCALE: NONE

REVISION HISTORY
DATE | ECO NUMBER | REV.

TITLE

DOCUMENT NUMBER

THE DRAWINGS AND SPECIFICATIONS, EITHER THE PROPERTY OF DIGITAL EQUIPMENT CORPORATION, SHALL NOT BE REPRODUCED OR COPIED OR USED IN WHOLE OR IN PART AS THE BASIS FOR MANUFACTURE OR SALE OF ITEMS WITHOUT WRITTEN PERMISSION.
COPYRIGHT © 1979 DIGITAL EQUIPMENT CORPORATION

HARNESS CONNECTION CHART # 2

ITEM NO.	HARNESS TERM POINT	HARNESS TERM CONNECTION	CONNECTION	WITH
36	1		P2-6 OF ITEM #3 (H7420*2)	
	2		P2-5 OF ITEM #3 (H7420*2)	
	—	P1	I/O BLOWER J1	

HARNESS CONNECTION CHART #3

ITEM NO.	HARNESS TERM POINT	HARNESS TERM CONNECTION	CONNECTION	WITH
34		J1	DOOR SWITCH MF20 #1	
		J2	DOOR SWITCH MF20 #2	
		J6	P6 OF ITEM #33	

HARNESS CONNECTION CHART #4

ITEM NO.	HARNESS TERM POINT	HARNESS TERM CONNECTION	CONNECTION	WITH
39			MF20 #1/PC22	
			MF20 #2/PC01	
39			MF20 #1/PD22	
			MF20 #2/PD01	
39			MF20 #1/PE22	
			MF20 #2/PE01	
39			MF20 #1/PF22	
			MF20 #2/PF01	

HARNESS CONNECTION CHART #5

ITEM NO.	HARNESS TERM POINT	HARNESS TERM CONNECTION	CONNECTION	WITH
55	—	J1	J1 CUTOUT IN CONN PANEL	
	—	J2	J2 CUTOUT IN CONN PANEL	
	6		MF20#2/GND A UPPER	
	7		MF20#2/GND A UPPER	
	8		MF20#2/+12B UPPER	
	9		MF20#2/+12B UPPER	
	10		MF20#2/GND B UPPER	
	11		MF20#2/-5B UPPER	
	12		MF20#2/GND C UPPER	
	13		MF20#2/ +12A UPPER	
	14		MF20#2/ GND D UPPER	
	15		MF20#2/-5A UPPER	
	16		MF20#2/GND E UPPER	
	17		MF20#2/-5.2B UPPER	
	18		MF20#2/GND F UPPER	
	19		MF20#2/-5.2A UPPER	
	20		MF20#2/GND H UPPER	
	21		MF20#2/-2.0 UPPER	
	22		MF20#1/GND A UPPER	
	23		MF20#1/GND A UPPER	
	24		MF20#1/+12B UPPER	
	25		MF20#1/+12B UPPER	
	26		MF20#1/GND B UPPER	
	27		MF20#1/-5B UPPER	
	28		MF20#1/GND C UPPER	
	29		MF20#1/ +12A UPPER	
	30		MF20#1/ GND D UPPER	
	31		MF20#1/+5A UPPER	
	32		MF20#1/ GND E UPPER	
	33		MF20#1/-5.2B UPPER	
	34		MF20#1/ GND F UPPER	
	35		MF20#1/-5.2A UPPER	
	36		MF20#1/GND H UPPER	
	37		MF20#1/-2.0 UPPER	
55	—	J10	NEXT HIGHER ASSY(KL10-R)	

HARNESS CONNECTION CHART # 6

ITEM NO.	HARNESS TERM POINT	HARNESS TERM CONNECTION	CONNECTION	WITH
35	—	J5	P5 OF ITEM#33	
	1		MF20#1/SW2(-)	
	2		MF20#1/SW2(L)	
	3		MF20#1/SW2(+)	
	12		MF20#2/SW2(-)	
	13		MF20#2/SW2(L)	
	14		MF20#2/SW2(+)	
	15		MF20#2/SWIC(-)	
	16			
	17		MF20#2/SWIC(L)	
	18			
	19		MF20#2/SWIC(+)	
	20			
	21		MF20#1/SWIC(-)	
	22			
	23		MF20#1/SWK(L)	
	24			
	25		MF20#1/SWK(+)	
	26			

HARNESS CONNECTION CHART #7

ITEM NO.	HARNESS TERM POINT	HARNESS TERM CONNECTION	CONNECTION	WITH
56	—	J3	J3 CUTOUT OF CONN PANEL	
	—	J4	J4 CUTOUT OF CONN PANEL	
	29		MF20#1/-2.0 LOWER	
	30		MF20#1/ GND H LOWER	
	31		MF20#1/-5.2A LOWER	
	32		MF20#1/GND F LOWER	
	33		MF20#1/-5.2B LOWER	
	34		MF20#1/GND E LOWER	
	35		MF20#1/+5A LOWER	
	36		MF20#1/GND D LOWER	
	37		MF20#1/+12A LOWER	
	38		MF20#1/GND C LOWER	
	39		MF20#1/-5B LOWER	
	40		MF20#1/GND B LOWER	
	41		MF20#1/+2B LOWER	
	42		MF20#1/ GND A LOWER	
	43		MF20#2/-2.0 LOWER	
	44		MF20#2/GND H LOWER	
	45		MF20#2/-5.2A LOWER	
	46		MF20#2/GND F LOWER	
	47		MF20#2/-5.2B LOWER	
	48		MF20#2/GND E LOWER	
	49		MF20#2/-5A LOWER	
	50		MF20#2/GND D LOWER	
	51		MF20#2/+12A LOWER	
	52		MF20#2/ GND C LOWER	
	53		MF20#2/-5B LOWER	
	54		MF20#2/GND B LOWER	
	55		MF20#2/+12B LOWER	
56	56		MF20#2/GND A LOWER	

HARNESS CONNECTION CHART 8

ITEM NO.	HARNESS TERM POINT	HARNESS TERM CONNECTION	CONNECTION	WITH
33		P1	NEXT HIGHER ASSY(KL10-R)	
		P2	NEXT HIGHER ASSY(KL10-R)	
		P3	I/O VANE SWITCH ASSY/J4	
		J1	I/O DOOR SWITCH	
		J17	NEXT HIGHER ASSY (KL10-R)	
		P5	J5 OF ITEM#35	
33		P6	J6 OF ITEM#34	

HARNESS CONNECTION CHART#9

ITEM NO.	HARNESS TERM POINT	HARNESS TERM CONNECTION	CONNECTION	WITH
31	1		NEXT HIGHER ASSY(KL10-R)	
	2		NEXT HIGHER ASSY(KL10-R)	
	3		NEXT HIGHER ASSY(KL10-R)	
		P1	NEXT HIGHER ASSY(KL10-R)	
		P2	NEXT HIGHER ASSY(KL10-R)	
		P3	H760/J1	
	16		H760/YELLOW (RTN)	
	17		H760/GRN(+5V)	
31	18		H760/ORN(+15V)	

HARNESS CONNECTION CHART#10

ITEM NO.	HARNESS TERM POINT	HARNESS TERM CONNECTION	CONNECTION	WITH
40		J9	NEXT HIGHER ASSY (KL10-R)	
		J2	MF20#1/F2-1	
		J3	MF20#1/F2-2	
		J4	MF20#1/F1-1	
		J5	MF20#1/F1-2	
		J6	MF20#2/F2-1	
		J7	MF20#2/F2-2	
		J8	MF20#2/F1-1	
40		J9	MF20#2/F1-2	

HARNESS CONNECTION CHART#11

ITEM NO.	HARNESS TERM POINT	HARNESS TERM CONNECTION	CONNECTION	WITH
72			MF20#1/BNC	
			NEXT HIGHER ASSY (KL10-R)	

HARNESS CONNECTION CHART #12

ITEM NO.	HARNESS TERM POINT	HARNESS TERM CONNECTION	CONNECTION	WITH
72			MF20#2/BNC	
			NEXT HIGHER ASSY (KL10-R)	

REVISION HISTORY		
DATE	ECO NUMBER	REV

DOCUMENT NUMBER			
SIZE	CODE		REV
B	AD	7020326-0-0	A

TITLE: I/O CAB ASSEMBLY

HARNESS CONNECTION CHART #13

ITEM NO.	HARNESS TERM POINT	HARNESS TERM CONNECTION	CONNECTION	WITH
32		P1	I/O BACKPLANE/ J1	
		P2	H7420#1/H744 #4 J1	
		P3	H7420#1/H744 #3 J1	
		P4	H7420#1/H744 #2 J1	
		P5	H7420#1/H744 #1 J1	
		P6	H7420#2/H744 #4 J1	
		P7	H7420#2/H744 #3 J1	
		P8	H7420#2/H744 #2 J1	
		P9	H7420#2/H744 #1 J1	
		P10	H7420#3/H770 J1	
		P11	H7420#3/H745 J1	
		P12	H7420#3/H744 #3 J1	
		P13	H7420#3/H744 #2 J1	
		P14	H7420#3/H744 #1 J1	
		P15	NEXT HIGHER ASSY(KL10-R)	
		P16	NEXT HIGHER ASSY(KL10-R)	
	1	—	RH20/PT25-L	
	2	—	PT26-L	
	3	—	PT24-L	
	4	—	PT23-L	
	5	—	PT22-L	
	6	—	PT21-L	
	7	—	PT20-L	
	8	—	PT19-L	
	9	—	PT18-L	
	10	—	PT17-L	
	11	—	PT16-L	
	12	—	RH20/PT15-L	
	13	—	DTE20/PT14-L	
	14	—	PT13-L	
	15	—	PT12-L	
	16	—	PT11-L	
	17	—	PT10-L	
	18	—	DTE20/PT9-L	
	19	—	20	70
	21	—	22	
	23	—	24	
	25	—	26	
	27	—		
	28	—		
	29	—		
	30	—		
	31	—		
	32	—		
	33	—	34	
	35	—	36	
	37	—	38	
	39	—	40	70
	41	—	DTE20/PT9-U	
	42	—	PT10-U	
	43	—	PT11-U	
	44	—	PT12-U	
	45	—	PT13-U	
	46	—	DTE20/PT14-U	
	47	—	RH20/PT15-U	
	48	—	PT16-U	
	49	—	PT17-U	
	50	—	PT18-U	
	51	—	PT19-U	
	52	—	PT20-U	
	53	—	PT21-U	
	54	—	PT22-U	
	55	—	PT23-U	
	56	—	PT24-U	
	57	—	PT25-U	
	58	—	RH20/PT26-U	
	111	—	ITEM 71/P13-3	
32	112	—	ITEM 71/P13-4	

HARNESS CONNECTION CHART #14

ITEM NO.	HARNESS TERM POINT	HARNESS TERM CONNECTION	CONNECTION	WITH
71	71	—	ITEM 32/P10-3	
	72	—	ITEM 32/P10-4	
	68	—	—	70
	67	—	—	70
	66	—	—	70
	65	—	—	70
	64	—	DTE20/PT9-U	
	63	—	PT10-U	
	62	—	PT11-U	
	61	—	PT12-U	
	60	—	PT13-U	
	59	—	DTE20/PT14-U	
	58	—	RH20/PT15-U	
	57	—	PT16-U	
	56	—	PT17-U	
	55	—	PT18-U	
	54	—	PT19-U	
	53	—	PT20-U	
	52	—	PT21-U	
	51	—	PT22-U	
	50	—	PT23-U	
	49	—	PT24-U	
	48	—	PT26-U	
	47	—	RH20/PT25-U	
	46	—	NEXT HIGHER ASSY(KL10-R)	
	45	—	NEXT HIGHER ASSY(KL10-R)	
71	—	P13	J13	

REVISION HISTORY		
REV.	ECO NUMBER	DATE

TITLE: I/O CAB ASSEMBLY

DOCUMENT NUMBER: SIZE E | CODE AD | NUMBER 7020325-0-0 | REV A

AUTOMATED BY PRTLST.5R(52)

P A R T S L I S T

LINE	ITEM	TOP DOCUMENT	PART NUMBER	MIN REV	DESCRIPTION	QTY PER VARIATION 00 A1	01 A1
1	1	E-AD-7020324-0-DBU	7020324-00		CABINET ASSY, I/O	1	1
2	2	E-UA-H760-0-0	0H760-E		H760-A WITH CABLES FOR KL10-RA,2	1	1
3	3		9009700-00	A	SCREW,SEMS TRUSS PHIL 10-	87	65
4	4	E-AD-7020381-0-0	7020381-00		LOGIC ASSY, RH20/DTE20	1	1
5	5	E-UA-H7420-0-0	H7420-A		POW SUPPLY HI POW H742-A 115V	3	3
6	6	E-AD-7021025-0-DBU	7021025-7F		CABLE, INTERNAL MASSBUS	8	8
7	7	C-MD-7436480-0-0	7426480-01	A	BRACKET,I/O C/C DUCT MOUNTING	2	2
8	8	D-IA-7020323-0-0	7020323-00		DUCT WELDMENT, I/O C/C	1	1
9	9	E-IA-7016018-0-0	7016018-00		CARD CAGE ASSY	2	0
10	10	E-IA-7014470-0-0	7014470-00		WELDMENT,TOP DUCT	2	0
11	11	D-IA-7020321-0-0	7020321-00		PLENUM WELDMENT, MF20 I/O	1	0
12	12	D-IA-7020322-0-0	7020322-00		PLENUM WELDMENT, MF20 OFFSET	1	0
13	13		1214045-02	D	FILTER,AIR ALUM FRAMED .	2	0
14	14		9006240-09	A	SCREW,MACH HEX PLN 1/4-	6	6
15	15		9006724-00	A	WASHER,LOCK EXTERNAL STEEL	8	8
16	16		9006013-04	A	SCREW,MACH BIND SLOT 4-	44	44
17	17		9007651-00	B	WASHER,LOCK EXTERNAL STEEL	10	10
18	18		9006565-00	C	NUT,HEX EXT TOOTH LCKWSHR 10-32	30	14
19	19	C-IA-7013059-0-0	7013059-02		GROUND STRAP	3	3
20	20	D-MD-7426484-0-0	7426484-01	A	COVER,PROTECTIVE,MF20	1	0
21	21		9006664-00	A	WASHER,FLAT SST	16	10
22	22		9006037-03	A	SCREW,MACH TRUSS PHIL 8-	59	19
23	23		9008151-00	A	WASHER,LOCK EXTERNAL STEEL	59	19
24	24	E-IA-7020841-0-DBU	7020841-01		I/O BULKHEAD WELDMENT	1	1
25	25		9007786-00	F	RETAINER,U-NUT 10-32X	8	6
26	26	D-UA-M8574-0-0	M8574-00		WRITE PATH	2	0
27	27	D-UA-M8575-0-0	M8575-00		SYNDROME MF20	2	0
28	28	D-UA-M8576-0-0	M8576-00		MOS CONTROL	2	0

REVISION HISTORY		
ENG	ECO NUMBER	REV
	INITIAL	A

BASIC PART NO: 7020325

SECTION A OF A

SECTION.VARIATION INDEX
[A]00,01
[B]
[C]
[D]
[E]
[F]

DRN: V. GUTBIER	DATE: 12-JUL-83	D I G I T A L
CHK'D: J. HUSON	DATE: 12-JUL-83	TITLE PARTS LIST I/O CAB ASSEMBLY
DES.ENG: R. SCOTT	DATE: 12-JUL-83	DOCUMENT NUMBER
RESP.ENG.: R. SCOTT	DATE: 12-JUL-83	SIZE K / CODE PL / NUMBER 7020325-0-DBP / REV A
MFG.ENG.: S. ALMEIDA	DATE: 12-JUL-83	RELEASE DATE:
ASSEMBLY NUMBER: E-AD-7020325-0-0	TOP DOCUMENT NUMBER: B-DD-7020325-0-0	FILE NAME: Z7430A.PLS / EDIT # 19

"THIS DRAWING AND THE SPECIFICATIONS CONTAINED HEREIN ARE CONFIDENTIAL AND PROPRIETARY. THEY ARE THE PROPERTY OF DIGITAL EQUIPMENT CORPORATION AND SHALL NOT BE REPRODUCED OR COPIED OR USED IN WHOLE OR IN PART AS THE BASIS FOR THE MANUFACTURE OR SALE OF ITEMS WITHOUT WRITTEN PERMISSION. THIS IS AN UNPUBLISHED WORK PROTECTED UNDER THE FEDERAL COPYRIGHT LAWS."

MRO

AUTOMATED BY PRTLST.5R(52)

P A R T S L I S T

LINE	ITEM	TOP DOCUMENT	PART NUMBER	MIN REV	DESCRIPTION	QTY PER VARIATION 00 A1	01 A1
29	29	D-UA-M8577-0-0	M8577-00		ADDRESS + TIME MF20	2	0
30	30	D-UA-M8579-0-0	M8579-00		MF20	8	0
31	31	J-IA-7020312-0-0	7020312-00		POWER HARNESS, H761	1	1
32	32	J-IA-7020316-0-0	7020316-00		I/O DC HARNESS	1	1
33	33	J-IA-7020319-0-0	7020319-00		I/O FAULT SWITCH HARNESS	1	1
34	34	J-IA-7020377-0-0	7020377-00		HARNESS,DOORSWITCH	1	0
35	35	J-IA-7015447-0-0	7015447-00		HARNESS VANE SWITCH	1	0
36	36	D-IA-7020498-0-0	7020498-00		HARNESS, I/O BLOWER AC	1	1
37	37	D-IA-7010877-0-0	7010877-00		HARNESS AC WIRING NO. 3	2	2
38	38	D-IA-7010805-0-0	7010805-00		A/C WIRING HARNESS ASSY 1	1	1
39	39		1700101-00	A	CABLE,COAX,ASSY, 1 FT W/CONN	4	0
40	40	D-MD-7020714-0-0	7020714-01		HARNESS, I/O AC FAN	1	0
41	41	D-AD-5412855-0-0	5412855-00		XBUS TERMINATOR	4	0
42	42		9007017-00	A	GROMMET,ROUND RUBBER	2	0
43	43		9007867-00		MOUNT, PUSH,CABLE TIE	A/R	A/R
44	44	D-MD-7429395-0-DBU	7429395-01		COVER, QUICK LATCH	1	1
45	45		9008264-00	A	MOUNT, CABLE TIE, ADHESIVE BACKE	A/R	A/R
46	46		9007880-00		TIE,CABLE BUNDL DIA 0-1.14"=101	A/R	A/R
47	47		9007032-00		TIE,CABLE BUNDL.DIA 0-1-3/4"=101	A/R	A/R
48	48		9009617-00	A	TIE,CABLE BUNDL.DIA 0-3"TYPE=101	A/R	A/R
49	49		9007036-00	B	GROMMET,CATERPILLAR POLYAMIDE	A/R	A/R
50	50		9007594-00	A	ADHESIVE,NEOPRENE	A/R	A/R
51	51		3613272-00	B	LABEL,ADH BACK,MYLAR CAP	11	11
52	52		9007080-00	A	CLAMP,CABLE,SCREW MTD. 3/16"	4	4
53	53		1219534-01		SCREW, CAPTV SLOT 4-	12	12
54	54	B-UA-00915-0-0	00915-03		JUMPER CORD	3	0
55	55	J-IA-7020317-0-0	7020317-00		MF20 DC PWR HARNESS TOP	1	0
56	56	J-IA-7020378-0-0	7020378-00		MF20 DC POWER HARNESS BOTTOM	1	0
57	57	C-IA-7429334-0-DBU	7429334-01	A	PANEL,BLANK,I/O	2	2
58	58	B-IA-7426516-0-0	7426516-01	A	BRACKET,GROUND	1	1
59	59	E-UA-H744-0-0	0H744-00		POWER REGULATOR	11	11
60	60	E-UA-H745-0-0	0H745-00		POWER REGULATOR	1	1
61	61	D-UA-H770-0-0	0H770-00		+15V 10A REGULATOR FOR H742	1	1
62	62	D-IA-7429396-0-DBU	7429396-01	A	PANEL, I.O. CONNECTOR	3	3
63	63	D-AD-7009861-0-0	7009861-00	A	RECEPT HOUSING ASSY-RP04	11	11
64	64		9006024-03	A	SCREW,MACH TRUSS PHIL 6-	8	8
65	65	C-MD-7428177-0-DBU	7428177-01	A	SHIELD,RECEPTACLE	8	8
66	66	C-IA-7429497-0-0	7429497-01	A	PLATE,NUT	2	2
67	67		9009228-10	A	SCREW,SEMS PAN PHIL 10-	30	30
68	68	C-IA-7429333-0-DBU	7429333-01	A	CLAMP,MASSBUS STRAIN RELIEF	8	8
69	69		9006688-00	A	WASHER,HELICAL SPLIT SST	44	44
70	70		9009110-00	A	TERM,TAB .365TAB 2POS	18	18
71	71	D-AD-7018288-0-0	7018288-01		ASSY, DC VOLTAGE MONITOR I/O NO.	1	1
72	72		1700100-00	A	CABLE,COAX,ASSY W/CONN	2	0
73	73		9107673-06	H	PWR CORD,TERM 3-14 SJT 115	2	0
74	74	C-IA-7008288-0-0	7008288-8F		CABLE ASSY PDP-11	1	0

DIGITAL	TITLE	SECTION A OF A	SIZE	CODE	DOCUMENT NUMBER	REV
	I/O CAB ASSEMBLY		K	PL	7020325-0-DBP	A

MRO

AUTOMATED BY PRTLST.5R(52)

PARTS LIST

LINE	ITEM	TOP DOCUMENT	PART NUMBER	MIN REV	DESCRIPTION	QTY PER VARIATION 00 A1	01 A1
75	75	D-IA-7413405-0-0	7413405-00	A	PANEL FILTER H7420	2	2
76	76		1220105-01	A	GASKET,EMI .25"OD	40	40
77	77		1221535-01	A	CLIP,NYLON FOR RF GASKET	82	82
78	78	C-IA-7419820-0-0	7419820-00	A	CABLE CLAMPS	1	0
79	79		3615087-02		LABEL,"DANGER-HIGH CURRENT"	2	0
80	80	A-DC-7420961-0-0	7420961-00		DECAL BACKPLANE	4	0
81	81		3622344-01		LABEL,I/O MODULE UTILIZATION	1	1
82	82	A-DC-7409873-0-0	7409873-01		PWR CONN DECAL WHITE ON CLEAR	1	1
83	83		9008203-00	A	NUT,HEX EXT TOOTH LCKWSHR 1/4-20	2	2
84	84		9007033-00		TIE,CABLE BUNDL.DIA 0-1-3/4"=101	A/R	A/R
85	85	C-IA-7013059-0-0	7013059-04		GROUND STRAP	2	2
86	86		3622337-01		LABEL,I/O BULKHEAD SET	1	1
87	87		9008274-00	B	FOAM, TAPE 3/8" X 3/8" BLACK	A/R	0
88	88		9006633-00	A	WASHER,LOCK INTERNAL STEEL	8	8

D I G I T A L	TITLE I/O CAB ASSEMBLY	SECTION A OF A	SIZE	CODE	DOCUMENT NUMBER	REV
			K	PL	7020325-0-DBP	A

MRO

PART NO.	VARIATION	REV
7020326-00	AS SHOWN (60HZ W/MEM)	A1
7020326-01	SAME AS-00 MINUS MEMORY PARTS	A1

NOTES:
1. BOTTOM HOLE IS HOLE 0. ALL HOLE NUMBERS ARE DESIGNATED BY *.

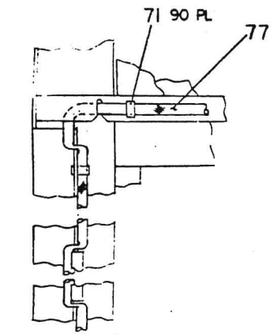

DETAIL AD
TYP GASKET SCHEME
SCALE: NONE

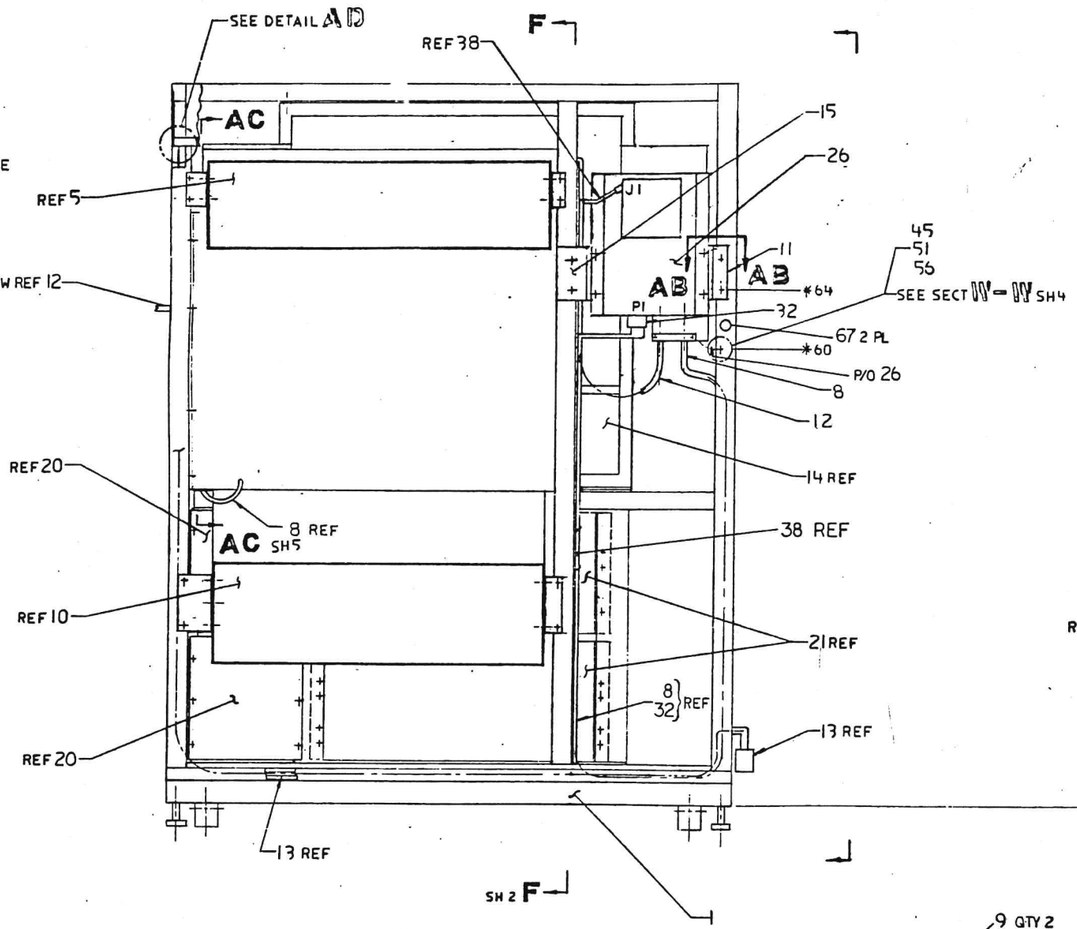

FRONT VIEW

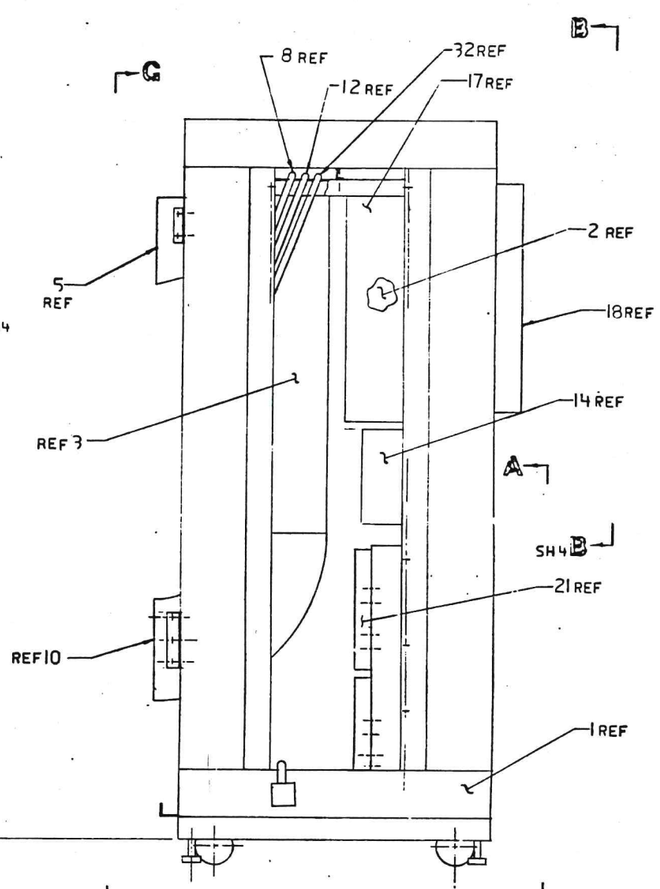

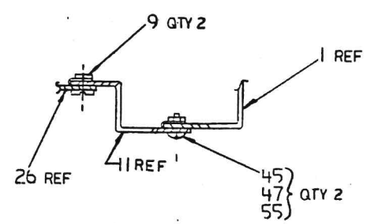

SECT AB-AB 2 PL
SCALE: 1/1
NOTE: REMOVE EXISTING BRACKETS FROM KW20 & REPLACE

CAUTION: OFF SHEET PARTS LIST EXIST
SEE K-PL-7020326-0-DBP

DESCRIPTION	DRAWING NO.	PART NO.	ITEM NO.
UNLESS OTHERWISE SPECIFIED DIMENSIONS ARE IN INCHES AND THE FOLLOWING TOLERANCES APPLY (PER DEC STD 114)			
INCHES TOLERANCES	ANGLES ±0°30'	APPLICABLE DIMENSION RANGE	DIMENSION RANGE IN INCHES
QUANTITY & VARIATION	SURFACE QUALITY	CHECK ONLY	
THIRD ANGLE PROJECTION	DRN W FAULSTICH	DATE 8/27/82	TITLE digital CPU ASSY
DO NOT SCALE DRAWING	CHKD	DATE 27 JULY 83	
REMOVE BURRS AND BREAK SHARP CORNERS	DRN	DATE 27 JULY 83	
MATERIAL	ENGR	DATE 27 JULY 83	DOCUMENT NUMBER
FINISH	MFG	DATE 27 JULY 83	SIZE E CODE AD NUMBER 7020326-0-0 REV A
	NEXT HIGHER DOC. KL10B		

COPYRIGHT © DIGITAL EQUIPMENT CORPORATION
OR IN PART AS THE BASIS FOR MANUFACTURE OR SALE OF ITEMS WITHOUT WRITTEN PERMISSION

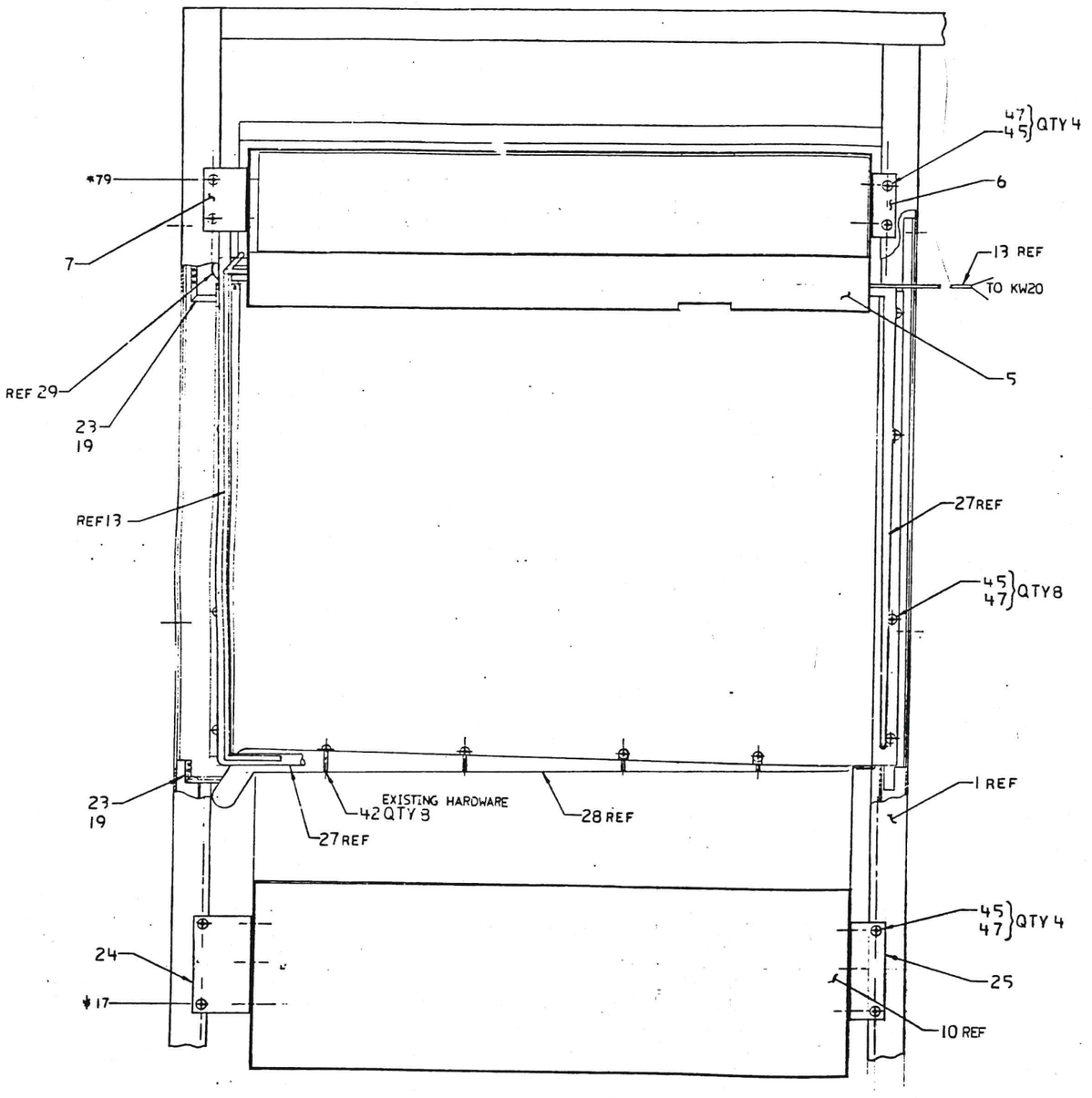

VIEW G-G SH 1
SCALE: 1/2

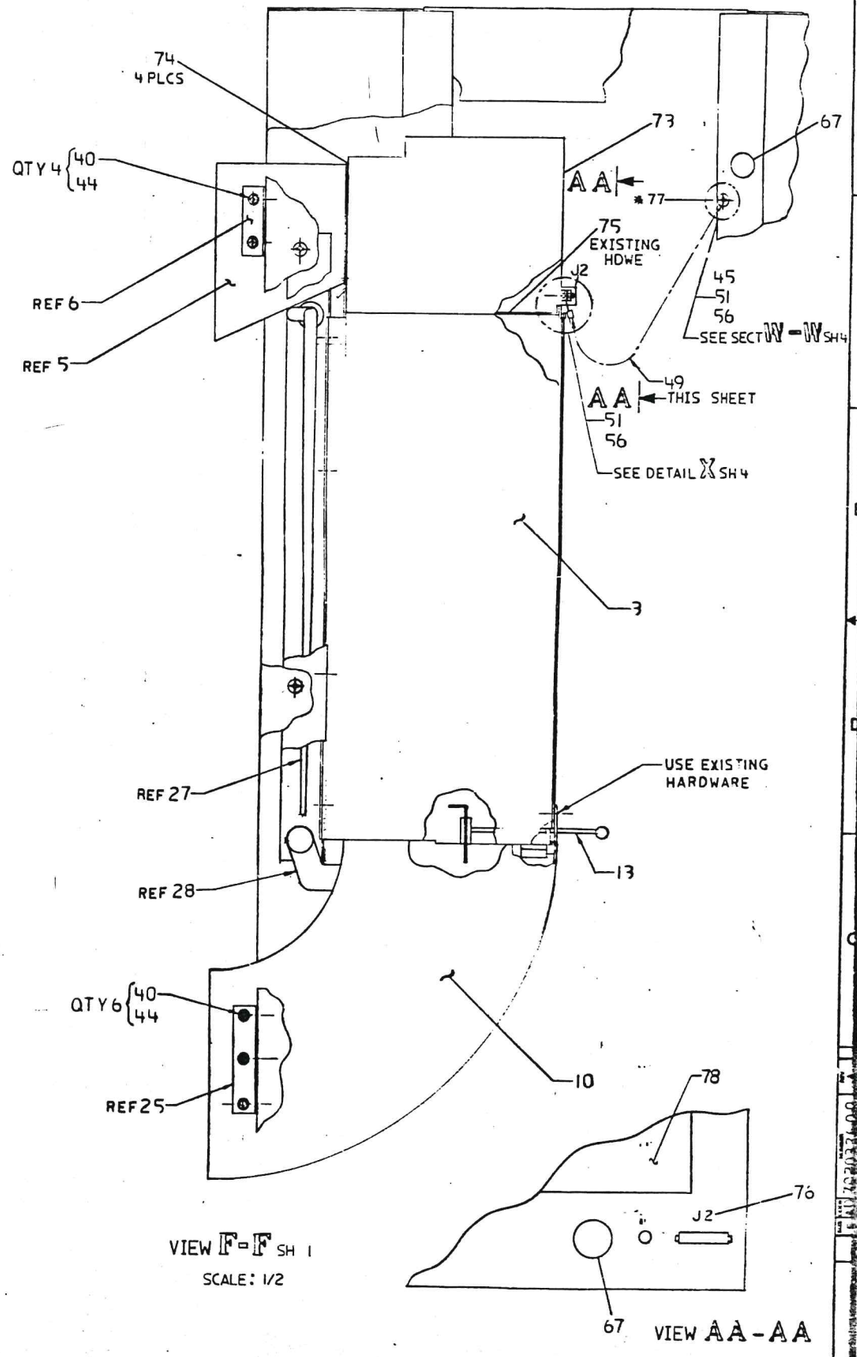

VIEW F-F SH 1
SCALE: 1/2

VIEW AA-AA

REVISION HISTORY		
DATE	ECO NUMBER	REV.

DOCUMENT NUMBER			
SIZE	CODE		REV
E	AD	7020326-0-0	A

TITLE CPU ASSY

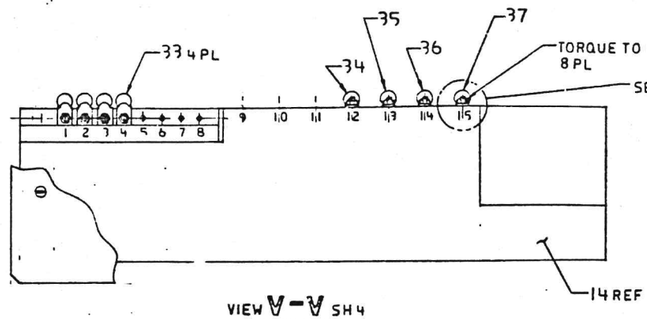

VIEW V-V SH 4
SCALE: 1/2

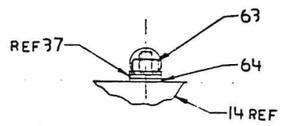

DETAIL AE 8 PL
SCALE: 1/1

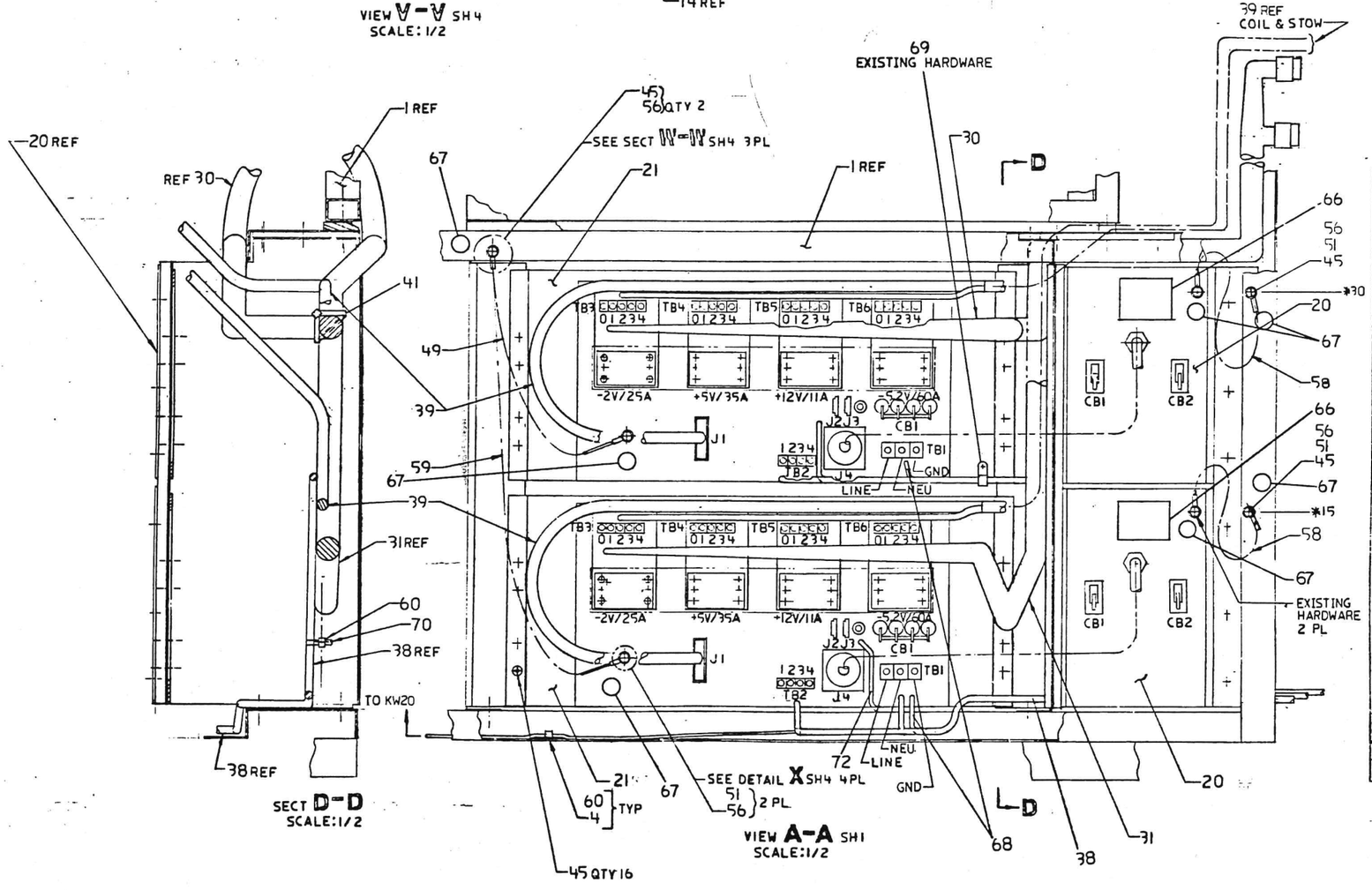

REVISION HISTORY		
DATE	ECO NUMBER	REV

TITLE	SIZE	CODE	DOCUMENT NUMBER	REV
CPU ASSY	E	AD	7020326-0-0	A
	SCALE 1/4		SHEET 3 OF 3	

THESE DRAWINGS AND SPECIFICATIONS ARE THE PROPERTY OF DIGITAL EQUIPMENT CORPORATION AND SHALL NOT BE REPRODUCED OR COPIED OR USED IN WHOLE OR IN PART AS THE BASIS FOR THE MANUFACTURE OR SALE OF ITEMS WITHOUT WRITTEN PERMISSION.
COPYRIGHT © DIGITAL EQUIPMENT CORPORATION

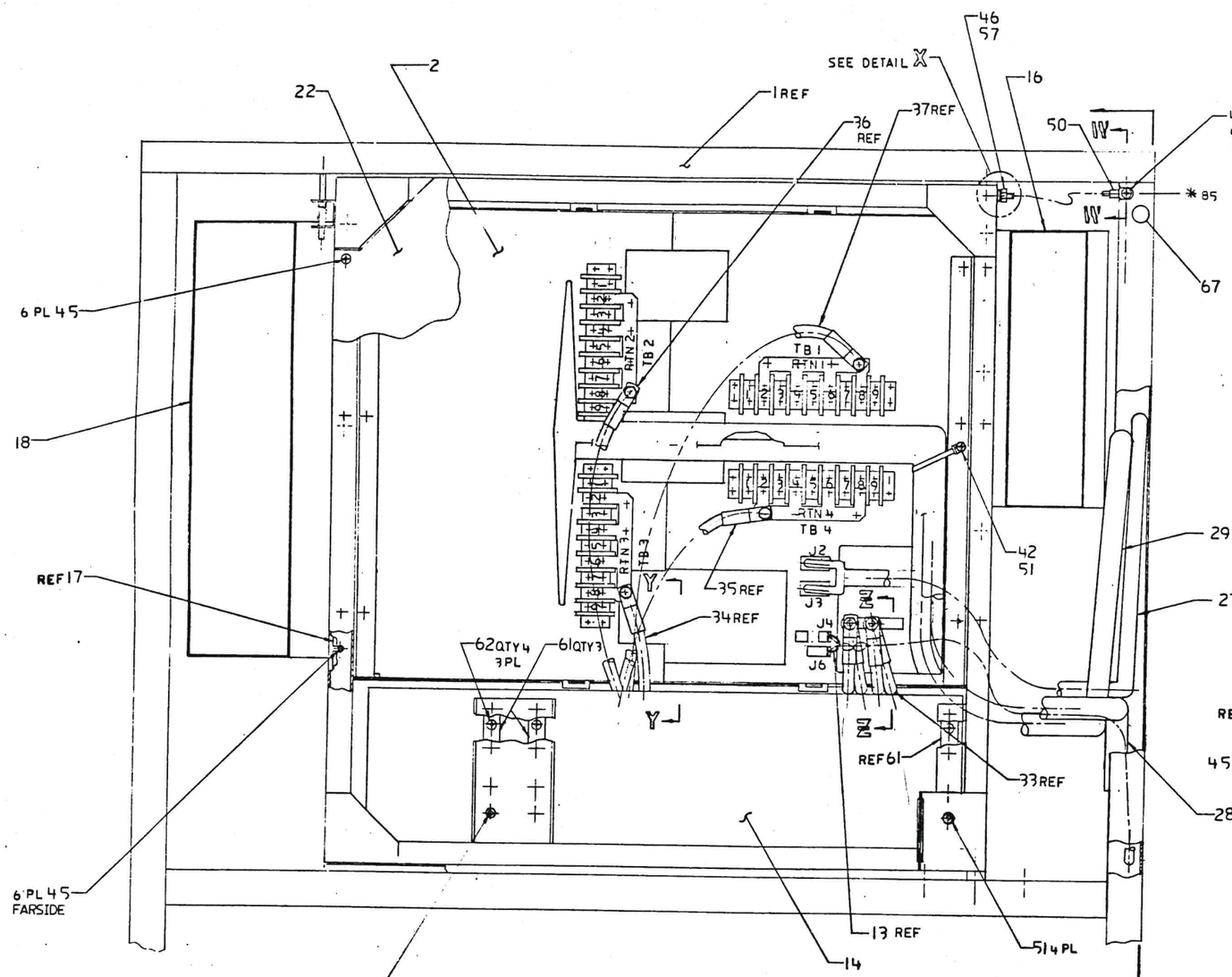

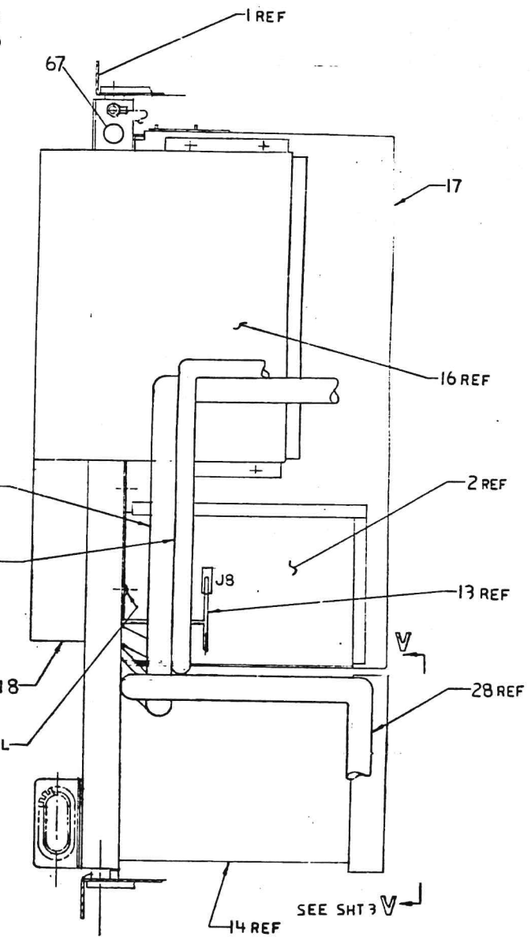

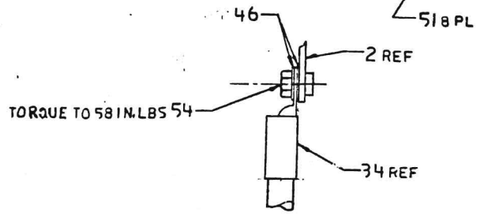

SECT Y-Y 4 PL
SCALE: 1/1

VIEW B-B SH 1
SCALE: 1/2

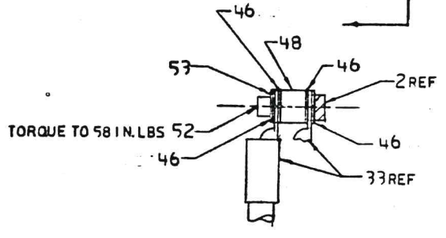

SECT Z-Z 2 PL
SCALE: 1/1

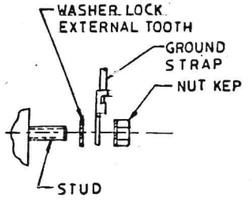

DETAIL X
SCALE: NONE
TYP GND SCHEME

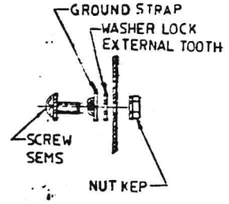

SECT W-W
SCALE: NONE
TYP GND SCHEME

REVISION HISTORY		
DATE	ECO NUMBER	REV

DOCUMENT NUMBER			
SIZE	CODE	NUMBER	REV

TITLE

PROPERTY OF DIGITAL EQUIPMENT CORPORATION AND SHALL NOT BE REPRODUCED OR COPIED OR USED IN WHOLE OR IN PART AS THE BASIS FOR THE MANUFACTURE OR SALE OF ITEMS WITHOUT WRITTEN PERMISSION.
COPYRIGHT © DIGITAL EQUIPMENT CORPORATION

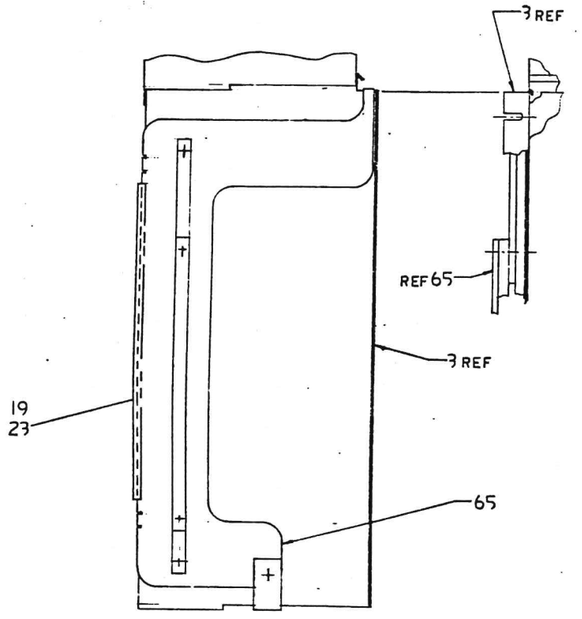

SECTION AC-AC SH1

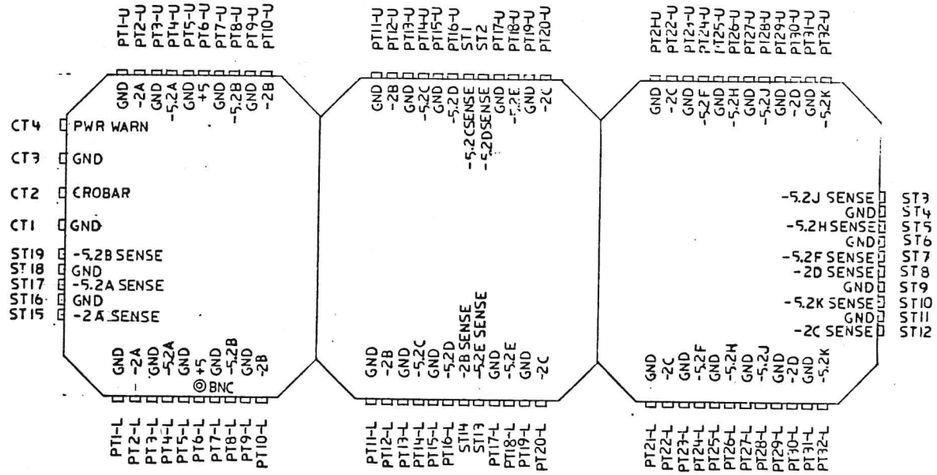

CPU BACKPLANE POWER TAB DESIGNATOR

REVISION HISTORY		
DATE	ECO NUMBER	REV

TITLE CPU ASSY

DOCUMENT NUMBER
SIZE E CODE AD NUMBER 7020336-0-0 REV A

COPYRIGHT © DIGITAL EQUIPMENT CORPORATION

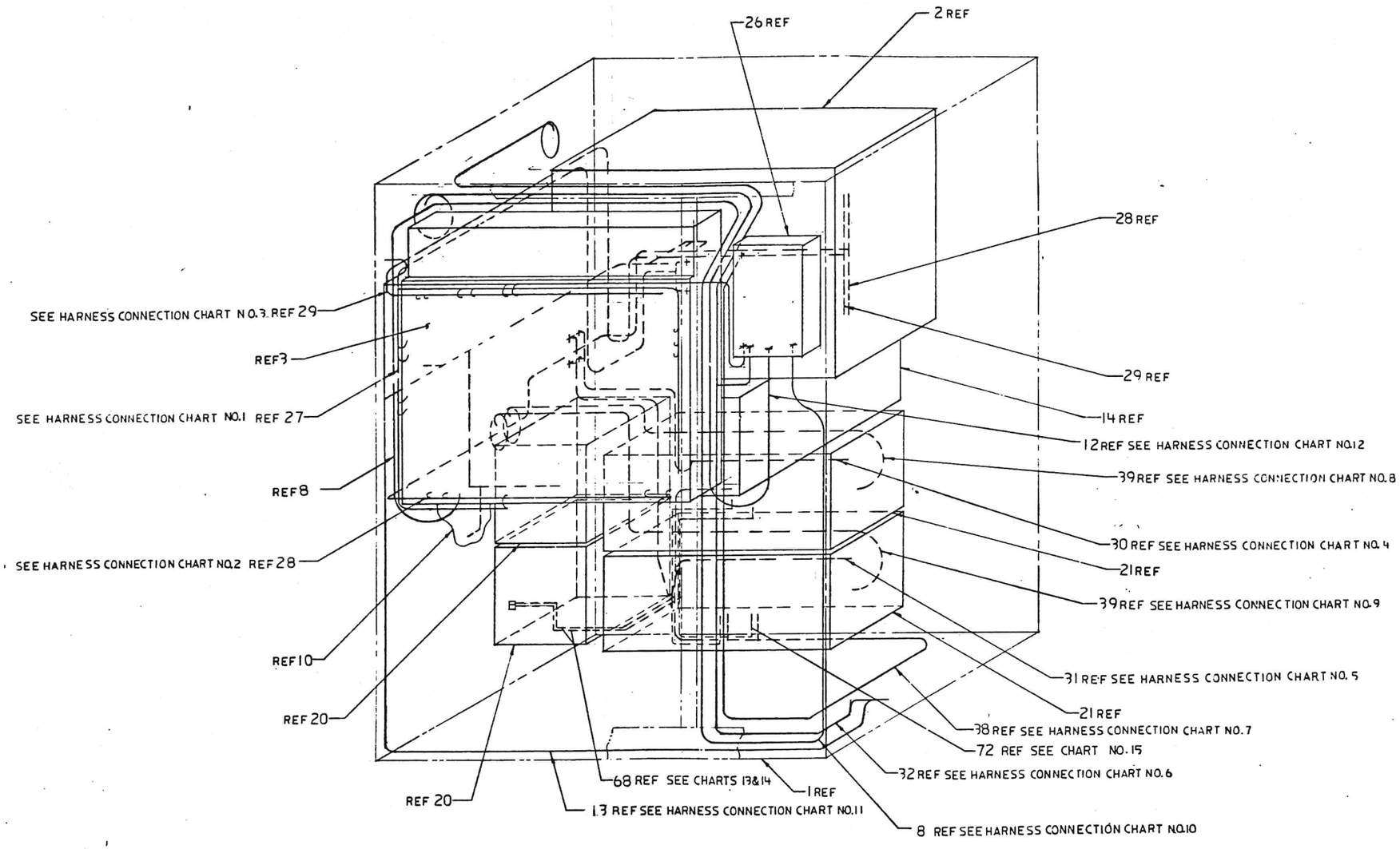

FRONT VIEW
SCALE:NONE

REVISION HISTORY		
DATE	ECO NUMBER	REV

TITLE	DOCUMENT NUMBER		
CPU ASSY	SIZE / CODE	NUMBER	REV
	E AD	7020326-0-0	A

PROPRIETARY OF DIGITAL EQUIPMENT CORPORATION AND SHALL NOT BE REPRODUCED OR COPIED OR USED IN WHOLE OR IN PART AS THE BASIS FOR MANUFACTURE OR SALE OF ITEMS WITHOUT WRITTEN PERMISSION.
COPYRIGHT © DIGITAL EQUIPMENT CORPORATION

HARNESS CONNECTION CHART NO. 1

ITEM NO.	HARNESS TERM POINT	HARNESS TERM CONNECTION	CONNECTION	WITH
27	÷	P2	H761-A/J2	—
↑	—	P3	H761-A/J3	—
	27	—	CPU/ST11	—
	28	—	↑ 12	—
	29	—	10	—
	30	—	11	—
	31	—	9	—
	32	—	8	—
	33	—	6	—
	34	—	7	—
	35	—	5	—
	36	—	4	—
	37	—	3	—
	38	—	↓ 4	—
	39	—	CPU/ST 2	—
	40	—	CPU/PT17-U	—
	41	—	CPU/ST 1	—
	42	—	CPU/PT15-U	—
	43	—	CPU/ST19	—
	44	—	↑ 18	—
	45	—	17	—
	46	—	16	—
	47	—	15	—
	48	—	↓ 16	—
	49	—	CPU/ST14	—
	50	—	CPU/PT15-L	—
↓	51	—	CPU/ST13	—
27	52	—	CPU/PT17-L	—

HARNESS CONNECTION CHART NO. 2

ITEM NO.	HARNESS TERM POINT	HARNESS TERM CONNECTION	CONNECTION	WITH
28	1	—	H761-A/TB3-8	—
↑	2	—	↑ TB2-1	—
	3	—	2	—
	4	—	3	—
	5	—	4	—
	6	—	5	—
	7	—	6	—
	8	—	↓ 7	—
	9	—	TB2-8	—
	10	—	↓ TB1-1	—
		—	H761-A/TB1-2	—
	12	—	CPU/PT1-L	—
	13	—	↓ 2-L	—
	14	—	3-L	—
	15	—	4-L	—
	16	—	7-L	—
	17	—	8-L	—
	18	—	9-L	—
	19	—	9-L	—
	20	—	10-L	—
	21	—	10-L	—
	22	—	11-L	—
	23	—	12-L	—
	24	—	13-L	—
	25	—	14-L	—
	26	—	15-L	—
	27	—	16-L	—
	28	—	17-L	—
	29	—	18-L	—
	30	—	19-L	—
	31	—	19-L	—
	32	—	20-L	—
	33	—	20-L	—
	34	—	21-L	—
	35	—	22-L	—
	36	—	23-L	—
	37	—	24-L	—
	38	—	25-L	—
	39	—	26-L	—
	40	—	27-L	—
	41	—	28-L	—
	42	—	29-L	—
	43	—	30-L	—
	44	—	↓ 31-L	—
	45	—	CPU/PT32-L	—
	46	—	H761-A/TB4-8	—
	47	—	↑ 7	—
	48	—	6	—
	49	—	5	—
	50	—	4	—
	51	—	3	—
	52	—	2	—
	53	—	TB4-1	—
	54	—	TB3-1	—
	55	—	↑ 2	—
	56	—	3	—
	57	—	4	—
	58	—	5	—
	59	—	↓ 6	—
28	60	—	H761-A/TB3-7	—

HARNESS CONNECTION CHART NO. 3

ITEM NO	HARNESS TERM POINT	HARNESS TERM CONNECTION	CONNECTION	WITH
29	1	—	H761-A/TB3-8	—
↑	2	—	↑ TB2-1	—
	3	—	2	—
	4	—	3	—
	5	—	4	—
	6	—	5	—
	7	—	6	—
	8	—	↓ 7	—
	9	—	TB2-8	—
	10	—	↓ TB1-1	—
	11	—	H761-A/TB1-2	—
	12	—	CPU/PT1-U	—
	13	—	↓ 2 ↑	—
	14	—	3	—
	15	—	4	—
	16	—	7	—
	17	—	8	—
	18	—	9	—
	19	—	9	—
	20	—	10	—
	21	—	10	—
	22	—	11	—
	23	—	12	—
	24	—	13	—
	25	—	14	—
	26	—	15	—
	27	—	16	—
	28	—	17	—
	29	—	18	—
	30	—	19	—
	31	—	19	—
	32	—	20	—
	33	—	20	—
	34	—	21	—
	35	—	22	—
	36	—	23	—
	37	—	24	—
	38	—	25	—
	39	—	26	—
	40	—	27	—
	41	—	28	—
	42	—	29	—
	43	—	30	—
	44	—	↓ 31	—
	45	—	CPU/PT32-U	—
	46	—	H761-A/TB4-8	—
	47	—	↑ 7	—
	48	—	6	—
	49	—	5	—
	50	—	4	—
	51	—	3	—
	52	—	2	—
	53	—	TB4-1	—
	54	—	TB3-1	—
	55	—	↑ 2	—
	56	—	3	—
	57	—	4	—
	58	—	5	—
	59	—	↓ 6	—
29	60	—	H761-A/TB3-7	—

HARNESS CONNECTION CHART NO.4

ITEM NO	HARNESS TERM POINT	HARNESS TERM CONNECTION	CONNECTION	WITH
30	÷	P1	NEXT HIGHER ASSY	—
↑	—	P3	NEXT HIGHER ASSY	—
	1	—	H7131-2/-2.0V (-) U	—
	56	—	↓ -2.0V (+) U	—
	55	—	-2.0V (-) L	—
	54	—	-2.0V (+) L	—
	53	—	+5.0V (+) U	—
	52	—	↑ + (-) U	—
	51	—	↑ + (+) U	—
	50	—	↑ + (-) U	—
	49	—	↑ + (+) L	—
	48	—	↑ + (-) L	—
	47	—	↑ + (+) L	—
	46	—	+5.0V (-) L	—
	45	—	+12.0V (+) U	—
	44	—	↑ + (-) U	—
	43	—	+ (+) U	—
	42	—	↑ + (-) U	—
	41	—	↑ + (+) L	—
	40	—	↑ + (-) L	—
	39	—	↑ + (+) L	—
	38	—	+12.0V (-) L	—
	37	—	-5.2V (-) U	—
	36	—	↑ - (+) U	—
	35	—	- (-) U	—
	34	—	- (+) U	—
	33	—	- (-) L	—
	32	—	- (+) L	—
	31	—	↑ - (-) L	—
30	30	—	H7131-2/-5.2V (+) L	—

REVISION HISTORY

DATE	ECO NUMBER	REV.

TITLE CPU ASSY

DOCUMENT NUMBER

SIZE D | CODE | NUMBER 7070336-00 | REV.

FSCM NO. 70203

SHEET 7

SHALL NOT BE REPRODUCED OR COPIED OR USED IN WHOLE OR IN PART AS THE BASIS FOR THE MANUFACTURE OR SALE OF ITEMS WITHOUT WRITTEN PERMISSION.
COPYRIGHT © DIGITAL EQUIPMENT CORPORATION

HARNESS CONNECTION CHART NO.5

ITEM NO.	HARNESS TERM POINT	HARNESS TERM CONNECTION	CONNECTION	WITH
31	—	P2	NEXT HIGHER ASSY(KL10-R)	—
↑	—	P4	NEXT HIGHER ASSY(KL10-R)	—
	1	—	H7131#1/-2.0V (-)U	—
	55	—	(+)U	—
	55	—	(-)L	—
	54	—	-2.0V (+)L	—
	53	—	+5.0V (+)U	—
	52	—	(-)U	—
	51	—	(+)U	—
	50	—	(-)U	—
	49	—	(+)L	—
	48	—	(-)L	—
	47	—	(+)L	—
	46	—	+5.0V (-)L	—
	45	—	+12.0V(+)U	—
	44	—	(-)U	—
	43	—	(+)U	—
	42	—	(-)U	—
	41	—	(+)L	—
	40	—	(-)L	—
	39	—	(+)L	—
	38	—	+12.0V(-)L	—
	37	—	-5.2V (-)U	—
	36	—	(+)U	—
	35	—	(-)U	—
	34	—	(+)U	—
	33	—	(-)L	—
	32	—	(+)L	—
	31	—	(-)L	—
31	30	—	H7131#1/-5.2 V (+)L	—

HARNESS CONNECTION CHART NO.6

ITEM NO.	HARNESS TERM POINT	HARNESS TERM CONNECTION	CONNECTION	WITH
32	—	P8	KW20/J8	—
32	—	P10	NEXT HIGHER ASSY(KL10-R)	—
32	1	—	ITEM 13 P6-7	—
32	12	—	ITEM 13 P6-8	—

HARNESS CONNECTION CHART NO. 7

ITEM NO.	HARNESS TERM POINT	HARNESS TERM CONNECTION	CONNECTION	WITH
38	—	J1	KW20/F1-1	
↑	—	J2	KW20/F1-2	
	—	P9	NEXT HIGHER ASSY(KL10-R)	
	3	—	H7131#1/TB2-1	
	4	—	#1/TB2-2	
	5	—	#1/TB2-3	
	6	—	#1/TB2-4	
	7	—	#1/TB1-LINE	
	8	—	#1/TB1-NEUT	
	9	—	#2/TB2-1	
	10	—	#2/TB2-2	
	11	—	#2/TB2-3	
38	12	—	H7131#2/TB2-4	

HARNESS CONNECTION CHART NO. 8

ITEM NO.	HARNESS TERM POINT	HARNESS TERM CONNECTION	CONNECTION	WITH
39	—	P1	H7131#2/J1	—
↑	—	J11	NEXT HIGHER ASSY (KL10-R)	—
	23	—	H7131#2/TB6-3	—
	24	—	TB6-2	—
	25	—	TB5-2	—
	26	—	TB5-3	—
	27	—	TB4-2	—
	28	—	TB4-3	—
	29	—	TB3-3	—
39	30	—	H7131#2/TB3-2	—

HARNESS CONNECTION CHART NO.9

ITEM NO.	HARNESS TERM POINT	HARNESS TERM CONNECTION	CONNECTION	WITH
39	—	P1	H7131#1/J1	—
↑	—	J11	NEXT HIGHER ASSY(KL10-R)	—
	23	—	H7131#1/TB6-3	—
	24	—	TB6-2	—
	25	—	TB5-2	—
	26	—	TB5-3	—
	27	—	TB4-2	—
	28	—	TB4-3	—
	29	—	TB3-3	—
39	30	—	H7131#1/TB3-2	—

HARNESS CONNECTION CHART NO.10

ITEM NO.	HARNESS TERM POINT	HARNESS TERM CONNECTION	CONNECTION	WITH
8	—	—	KW20/J6	
	—	—	ITEM 3/COAXCONN(BNC)	

HARNESS CONNECTION CHART NO.11

ITEM NO.	HARNESS TERM POINT	HARNESS TERM CONNECTION	CONNECTION	WITH
13	—	P6	FOR EXPANSION(MF20F)	—
↑	—	J16	NEXT HIGHER ASSY(KL10-R)	—
	—	J17	NEXT HIGHER ASSY(KL10-R)	—
	—	J1	CPU DOOR SWITCH	—
	—	P1	CPU VANE SWITCH (J1)	—
	—	P8	H761-A/J8	—
	3	—	H761-A/J4-2	—
	4	—	H761-A/J6-4	—
	41	—	ITEM#32/P8-1	—
	42	—	ITEM#32/P8-2	—
	43	—	CPU/PT5-U	—
	44	—	PT6-U	—
	45	—	CT4	—
	46	—	CT3	—
	47	—	CT2	—
	48	—	CT2	—
	49	—	CT1	—
	50	—	CT1	—
↑	51	—	PT6-L	—
13	52	—	CPU/PT5-L	—

HARNESS CONNECTION CHART NO.12

ITEM NO.	HARNESS TERM POINT	HARNESS TERM CONNECTION	CONNECTION	WITH
12	—	J2	KW20/J10	—
	—	J1	NEXT HIGHER ASSY (KL10-R)	—

HARNESS CONNECTION CHART NO.13

ITEM NO	HARNESS TERM POINT	HARNESS TERM CONNECTION	CONNECTION	WITH
68	—	BROWN	H7131#1/TB1-LINE	—
	—	BLUE	H7131#1/TB1-NEU	—
	—	GRN/YEL	H7131#1/TB1-GND	—

HARNESS CONNECTION CHART NO.14

ITEM NO	HARNESS TERM POINT	HARNESS TERM CONNECTION	CONNECTION	WITH
68	—	BROWN	H7131#2/TB2-LINE	—
	—	BLUE	H7131#2/TB2-NEU	—
	—	GRN/YEL	H7131#2/TB2-GND	—

HARNESS CONNECTION CHART NO.15

ITEM NO	HARNESS TERM POINT	HARNESS TERM CONNECTION	CONNECTION	WITH
72	—	—	H7131#1/J3	—
	—	—	H7131#2/J2	—

REVISION HISTORY

DATE	ECO NUMBER	REV.

TITLE: CPU ASSY

DOCUMENT NUMBER: SIZE E | CODE AD | 7020326-0-0 | REV A

NEXT ASSY 7020324-0-0

AUTOMATED BY PRTLST.5R(52)

P A R T S L I S T

LINE	ITEM	TOP DOCUMENT	PART NUMBER	MIN REV	DESCRIPTION	QTY PER VARIATION 00 A	01 A
1	1	E-AD-7020324-0-DBU	7020324-01	A	CABINET ASSY, CPU	1	1
2	2	E-UA-H761-0-0	0H761-A	A	H761 WITHOUT COVER	1	1
3	3	E-AD-7020380-0-0	7020380-00	A	CPU LOGIC ASSY, (KL10-PV)	1	1
4	4		9008264-00	A	MOUNT, CABLE TIE, ADHESIVE BACKE	A/R	A/R
5	5	E-IA-7426485-0-0	7426485-01	A	DUCT,LOGIC,CPU CAB TOP	1	1
6	6	C-MD-7426449-0-0	7426449-01	A	CLIP,DUCT,RIGHT HAND	1	1
7	7	C-MD-7426448-0-0	7426448-01	A	CLIP,DUCT,LEFT HAND	1	1
8	8		1700100-00	A	CABLE,COAX,ASSY W/CONN	1	-
9	9		9010434-01	A	RECEPTACLE,CLIP-ON STEEL	4	-
10	10	E-DA-7426492-0-0	7426492-01	A	DUCT,WELDMENT,CPU LOGIC	1	1
11	11	D-MD-7426465-0-0	7426465-02	A	BRACKET,MASTER OSCILLATOR	1	-
12	12	D-IA-7015524-0-0	7015524-8F	A	CABLE CLOCK SELECT	1	-
13	13	E-IA-7020320-0-0	7020320-00	A	CPU FAULT HARNESS	1	1
14	14	E-AD-7009878-0-0	7009878-00		CAPACITOR BOX ASSY (KL10)	1	1
15	15	D-MD-7426465-0-0	7426465-01	A	BRACKET,MASTER OSCILLATOR	1	-
16	16	E-DA-7426488-0-0	7426488-01	A	DUCT,REG. P.S. RIGHT HAND	1	1
17	17	E-DA-7426486-0-0	7426486-01	A	COVER,PROTECTIVE,REG. P.S.	1	1
18	18	E-DA-7426487-0-0	7426487-01	A	DUCT,REG. P.S. LEFT HAND	1	1
19	19		9007594-00	A	ADHESIVE,NEOPRENE	A/R	A/R
20	20	E-AD-7015075-0-0	7015075-00	A	BATTERY BOX ASSY	2	-
21	21		3014903-00	A	POWER SUPPLY, MULTIPLE OUTPUT	2	-
22	22	D-MD-7426464-0-0	7426464-01	A	PLATE,PROTECTION	1	1
23	23		9007036-00	A	GROMMET,CATERPILLAR POLYAMIDE	A/R	A/R
24	24	C-MD-7426494-0-0	7426494-01	A	CLIP,L.H. DUCT CPU LOGIC	1	1
25	25	C-MD-7426493-0-0	7426493-01	A	CLIP,R.H. DUCT CPU LOGIC	1	1
26	26	D-UA-KW20-0-0	0KW20-A	A	OSCILLATOR ASSY MASTER 60HZ	1	-
27	27	E-IA-7020713-0-0	7020713-01		HARNESS, CPU SENSE	1	1
28	28	J-IA-7020313-0-0	7020313-00	A	HARNESS,CPU DC POWER LOWER	1	1

REVISION HISTORY			BASIC PART NO: 7020326			
ENG	ECO NUMBER	REV	SECTION A OF A			
	INITIAL	A	SECTION.VARIATION INDEX [A]00,01	DRN: BILL FAULSTICH	DATE: 24-JUN-83	D I G I T A L
			[B]	CHK'D: J. HUSON	DATE: 24-JUN-83	TITLE PARTS LIST CPU CABINET ASSEMBLY
			[C]	DES.ENG: ROGER SCOTT	DATE: 24-JUN-83	DOCUMENT NUMBER: SIZE K, CODE PL, NUMBER 7020326-0-DBP, REV A
			[D]	RESP.ENG.: ROGER SCOTT	DATE: 24-JUN-83	
			[E]	MFG.ENG.: SUE ALMEDIA	DATE: 24-JUN-83	RELEASE DATE:
			[F]	ASSEMBLY NUMBER: E-AD-7020326-0-0	TOP DOCUMENT NUMBER: B-DD-7020326-0-0	FILE NAME: Z7835A.PLS, EDIT #: 18

"THIS DRAWING AND THE SPECIFICATIONS CONTAINED HEREIN ARE CONFIDENTIAL AND PROPRIETARY. THEY ARE THE PROPERTY OF DIGITAL EQUIPMENT CORPORATION AND SHALL NOT BE REPRODUCED OR COPIED OR USED IN WHOLE OR IN PART AS THE BASIS FOR THE MANUFACTURE OR SALE OF ITEMS WITHOUT WRITTEN PERMISSION. THIS IS AN UNPUBLISHED WORK PROTECTED UNDER THE FEDERAL COPYRIGHT LAWS."

MRO

AUTOMATED BY PRTLST.5R(52)

P A R T S L I S T

LINE	ITEM	TOP DOCUMENT	PART NUMBER	MIN REV	DESCRIPTION	QTY PER 00 A	QTY PER 01 A
29	29	J-IA-7020311-0-0	7020311-00	A	HARNESS,CPU,DC POWER UPPER	1	1
30	30	J-IA-7020494-0-0	7020494-00	A	HARNESS DC POWER H7131 TOP	1	-
31	31	J-IA-7020495-0-0	7020495-00	A	HARNESS, DC POWER H7131 BOTTOM	1	-
32	32	E-IA-7020711-0-0	7020711-01		HARNESS, DC MASTER OSC	1	-
33	33	D-IA-7020717-0-0	7020717-0M		CABLE, CAP BOX POWER	4	4
34	34	D-IA-7020718-0-0	7020718-01		PWR CABLE CAP BOX	1	1
35	35	D-IA-7020718-0-0	7020718-1H		POWER CABLE, CAP BOX	1	1
36	36	D-IA-7020718-0-0	7020718-1K		POWER CABLE, CAP BOX	1	1
37	37	D-IA-7020718-0-0	7020718-2L		POWER CABLE, CAP BOX	1	1
38	38	J-IA-7020712-0-0	7020712-01		HARNESS, AC POWER CPU	1	-
39	39	J-IA-7020328-0-0	7020328-00	A	CABLE,MARGIN SENSE	2	-
40	40		9J06660-00	A	WASHER,FLAT SST	10	10
41	41		9009617-00	A	TIE,CABLE BUNDL.DIA 0-3"TYPE=101	A/R	A/R
42	42		9007033-00		TIE,CABLE BUNDL.DIA 0-1-3/4"=101	A/R	A/R
43	43		9007031-00	B	TIE,CABLE BUNDL.DIA 0- 3/4"=101	A/R	A/R
44	44		9006563-00	A	NUT,HEX EXT TOOTH LCKWSHR 8-32	10	10
45	45		9009700-00	A	SCREW,SEMS TRUSS PHIL 10-	74	36
46	46		9006724-00	A	WASHER,LOCK EXTERNAL STEEL	17	17
47	47		9007786-00	F	RETAINER,U-NUT 10-32X	20	16
48	48	B-MD-7411296-0-0	7411296-00	A	HEAT SINK SPACER (KL10)	2	2
49	49	C-IA-7013059-0-0	7013059-05		GROUND STRAP	2	1
50	50	C-IA-7013059-0-0	7013059-04		GROUND STRAP	1	1
51	51		9006565-00	C	NUT,HEX EXT TOOTH LCKWSHR 10-32	21	18
52	52		9006376-08	A	SCREW,CAP SOC HEX 1/4-	2	2
53	53		9008415-00	A	WASHER,FLAT SST	2	2
54	54		9006241-09	A	SCREW,MACH HEX PLN 1/4-	4	4
55	55		9006664-00	A	WASHER,FLAT SST	4	-
56	56		9007651-00	B	WASHER,LOCK EXTERNAL STEEL	10	3
57	57		9008203-00	A	NUT,HEX EXT TOOTH LCKWSHR 1/4-20	1	1
58	58	C-IA-7013059-0-0	7013059-01		GROUND STRIP	2	-
59	59	C-IA-7013059-0-0	7013059-06	A	GROUND STRIP	1	-
60	60		9007867-00		MOUNT, PUSH,CABLE TIE	A/R	-
61	61	C-IA-7414615-0-0	7414615-00		MOUNTING PLATE, CAPACITOR BOX	3	3
62	62		9006037-02	A	SCREW,MACH FLAT PHIL 8-	12	12
63	63		9006568-00	A	NUT,HEX EXT TOOTH LCKWSH 5/16-18	8	8
64	64		9006638-00	A	WASHER,LOCK INTERNAL STEEL	8	8
65	65	D-AD-7016447-0-0	7016447-00		STRAIN RELIEF ASSY	1	1
66	66		3616053-00	A	LABEL,DANGER HIGH VOLTAGE FOR TU	2	-
67	67		3613272-00	B	LABEL,ADH BACK,MYLAR CAP	13	4
68	68	D-IA-7021029-0-0	7021029-03		CABLE, POWER AC	2	-
69	69		9007083-00	A	CLAMP,CABLE,SCREW MTD. 3/8 "	A/R	A/R
70	70		9007032-00		TIE,CABLE BUNDL.DIA 0-1-3/4"=101	A/R	A/R
71	71		1221535-01	A	CLIP,NYLON FOR RF GASKET	90	90
72	72	C-IA-7008288-0-0	7008288-3F		CABLE ASSY	1	-
73	73		1213012-00	A	BLOWER,CENTRIFUGAL 550CFM 208V	1	1
74	74		9008274-00	B	FOAM, TAPE 3/8" X 3/8" BLACK	A/R	A/R

DIGITAL	TITLE	SECTION A OF A	SIZE	CODE	DOCUMENT NUMBER	REV
	CPU CABINET ASSEMBLY		K	PL	7020326-0-DBP	A

MRO

AUTOMATED BY PRTLST.5R(52)

PARTS LIST

LINE	ITEM	TOP DOCUMENT	PART NUMBER	MIN REV	DESCRIPTION	QTY PER VARIATION 00 A	01 A
75	75	D-IA-7012343-0-0	7012343-00		SCREEN, DIFFUSER ASSY (C-P-U)	1	1
76	76	A-DC-7409873-0-0	7409873-01	A	PWR CONN DECAL WHITE ON CLEAR	1	1
77	77		1220105-01	A	GASKET,EMI .25"OD	40	40
78	78		3622343-01		LABEL,CPU MODULE UTILIZATION	1	1

	TITLE		SIZE	CODE	DOCUMENT NUMBER	REV
D I G I T A L	CPU CABINET ASSEMBLY	SECTION A OF A	K	PL	7020326-0-DBP	A

MRO

THIS DRAWING IS THE PROPRIETARY PROPERTY OF DIGITAL EQUIPMENT CORPORATION. NEITHER IT NOR THE INFORMATION IT CONTAINS IS TO BE REPRODUCED OR COPIED OR USED IN WHOLE OR IN PART AS THE BASIS FOR THE MANUFACTURE OR SALE OF ITEMS WITHOUT WRITTEN PERMISSION. COPYRIGHT © 1973 DIGITAL EQUIPMENT CORPORATION

PART NUMBER	VARIATION	
H760-A	208V	60HZ
H760-B	416V	50HZ
H760-C	208V	60HZ
H760-D	416V	50HZ
H760-E	208V	60HZ

NOTES:
1. THIS ASSY HAS AN OFFSHEET PARTS LIST REFER TO A-PL-H760-0-0
2. TRANSFORMER ITEM #5 AND #6 TO BE ASSEMBLED (USING ITEM #10 #11 & #31) TO MTG PLATE ITEM #4 3 PLACES (TYP FOR T1, T2 & T3) THEN ATTACH MTG PLATE TO CHASSIS WITH (4) ITEM #10 & 31 (TYP 3 PLACES)
3. DISENGAGE 4 MTG FASTENERS ON DIODE HEAT SINK ITEM #2 & REMOVE FROM FAN BRKT. (PART OF HEAT SINK) ATTACH FAN BRKT. WITH 4 ITEM #08 #31 TO CHASSIS ITEM #1 REPLACE DIODE HEAT SINK WHEN ABOVE OPERATION IS COMPLETE
4. LABEL POINT DESIGNATIONS OF 2 AWG CABLES (ITEM 37 TO 43) WITH BRADY MARKERS.
5. INSTALL INSULATOR CAPS (PART OF ITEM 5 OR 44) TO CAPACITORS AFTER LEAD CONNECTIONS.
6. LUG MAY GO ON EITHER SIDE OF TRANSFORMER OR DIODE TERMINALS.
7. ATTACH MOUNTS WITH ITEM 67 OR EQUIVALENT AND TIE HARNESS (ITEM 20) TO CABLE TIE MOUNTS 3 PLACES.
8. TORQUE DOWN #2 AWG WIRE MTG. HARDWARE ON TRANSFORMERS T1, T2 & T3 TERMINALS 11 THRU 13 AND DIODE ASSY. D4 TERMINALS 1 THRU 6 AND 9 THRU 12 TO 236 IN.-LBS. (19 PLACES).

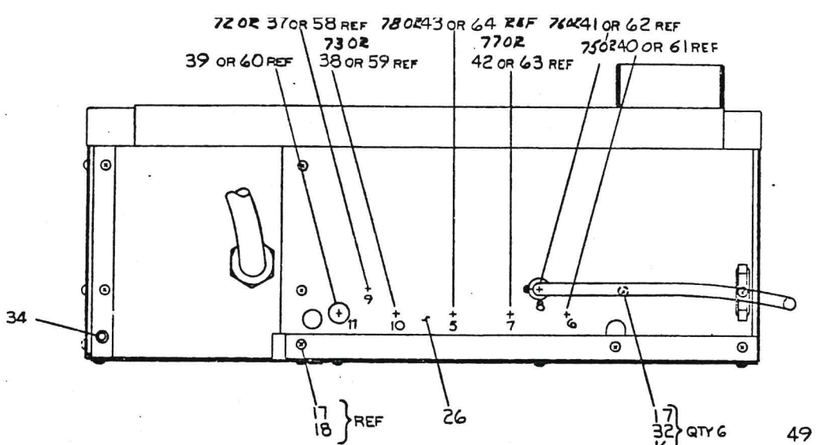

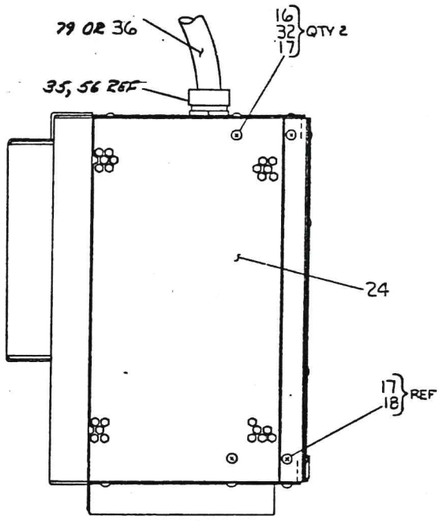

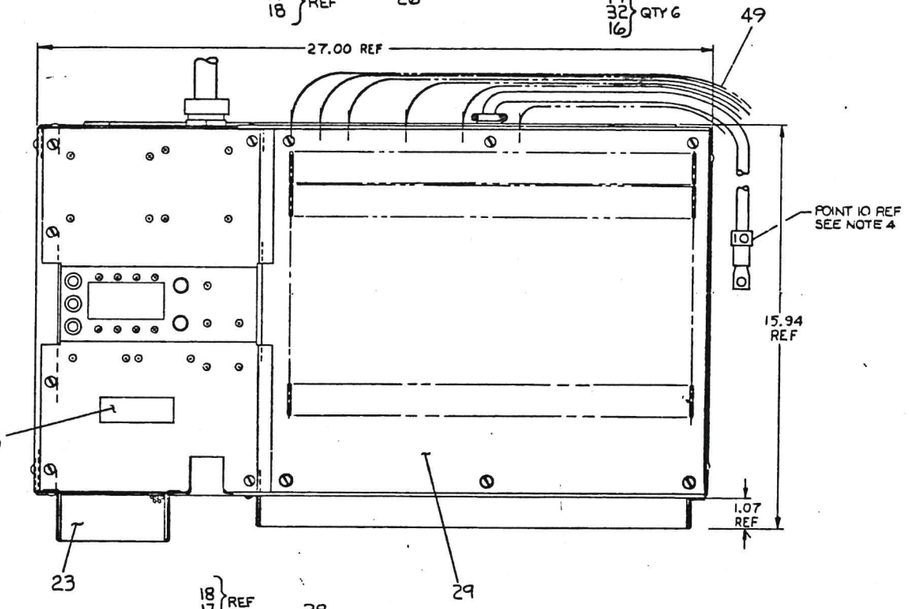

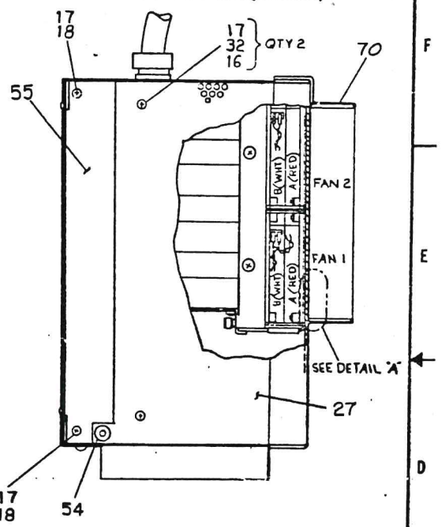

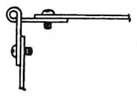

DETAIL "B"

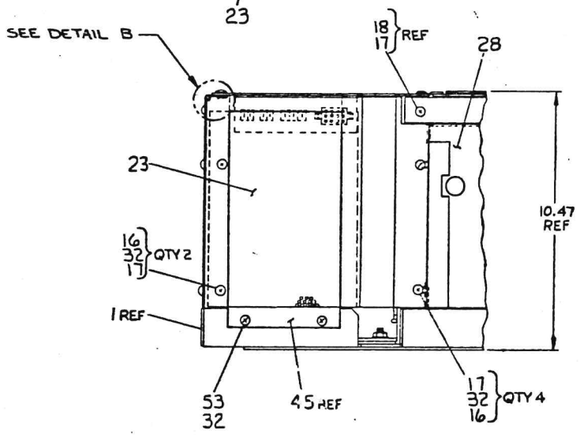

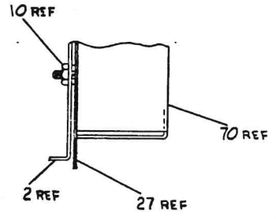

DETAIL "A"

DW	CHANGE NO.	REV.
EG	H760-0000 01	A
EG	H760-0000 02	B
EG	H760-0000 03	C
EG	H760-0000 04	D
EG	H760-0000 05	E
EG	H760-MR009	H
EG	H760-MR010	J

N. HEARD 8/14/78
B. Powell 11/4/78
JIM DREW
Jim Drew 8-22-78
Dave 8-17-84
R. SCOTT

FIRST USED ON OPTION/MODEL	KL10		
UNLESS OTHERWISE SPECIFIED DIMENSIONS IN INCHES TOLERANCES FRACTIONS ±1/64 .X ±.1 .XX ±.05 .XXX ±.010 ANGLES ±1° FINISH, SURFACE QUALITY, REMOVE BURRS AND BREAK SHARP CORNERS			
MATERIAL	SEE PARTS LIST		
NEXT HIGHER ASSY	D-UA-KL10-0-0		
SCALE	1/2		
SHEET	1		

QTY.	DESCRIPTION	PART NO.	ITEM NO.

PARTS LIST

DRN	J. Johnson	DATE 7/8/74
CHK		DATE
ENG		DATE
MFG		DATE
QA		DATE

EQUIPMENT CORPORATION

TITLE: RAW POWER SUPPLY H760

SIZE CODE E/UA | NUMBER H760-0-0 | REV J

H760-0-0 J UA E

1. INSTALL JUMPER (ITEM 51)
   BETWEEN T1-2 & T1-3
   T2-2 & T2-3
   ON H760 B & D VAR. ONLY.
2. USED ON C+D VARIATIONS ONLY.
3. TORQUE TO 6 FOOT-LBS (72 INCH POUNDS)

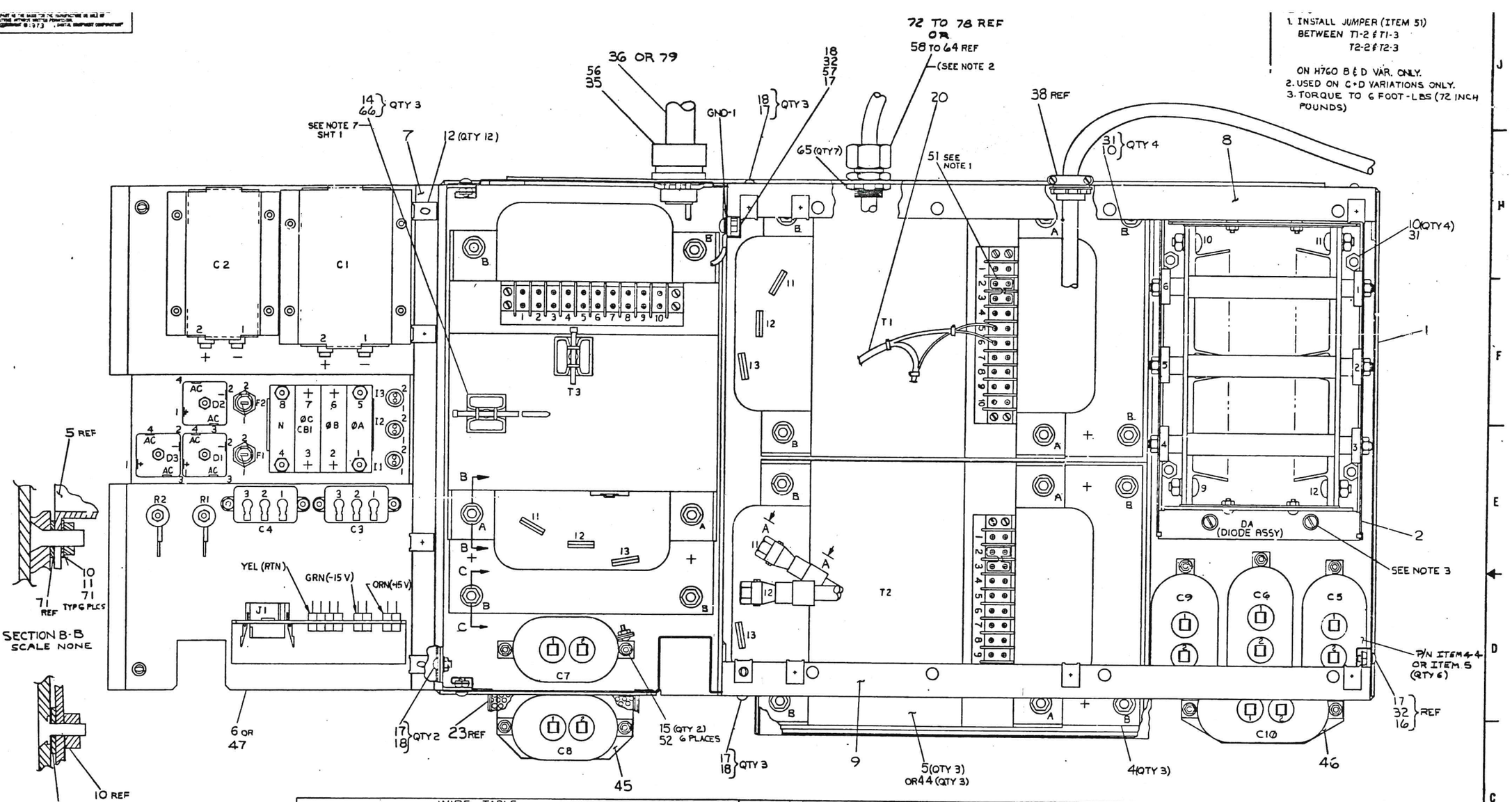

SECTION B-B
SCALE NONE

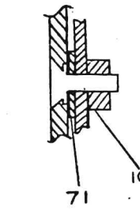

SECTION C-C
TYP 12 PLCS
SCALE NONE

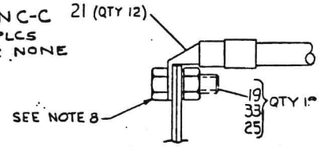

VIEW A-A
SEE NOTE 6

WIRE TABLE

ITEM NO	DESCRIPTION AWG	COLOR	FROM POINT	FROM CONNECTION	FROM TERM	TO POINT	TO CONNECTION	TO TERM	REMARKS
22	2	BLU	——	T1-11	21	——	DA-1	21	
↓	↓	↓	——	T1-13	↓	——	DA-2	↓	
			——	T2-11		——	DA-3		
			——	T2-13		——	DA-4		
			——	T3-11		——	DA-5		
22	2	BLU	——	T3-13	21	——	DA-6	21	
2	18	WHT		FAN1-B	——		CB1-1	——	
REF	TWP	RED		FAN1-A	——		CB1-2 *	——	*CB1-4
20	18		1	D2-3	——	30	T2-5 *	——	*T2-7
↓	TWP		2	D2-4	——	31	T2-7 *	——	*T2-9
	18		3	D1-3	——	23	T1-5 *	——	*T1-7
	TWP		4	D1-4	——	24	T1-7 *	——	*T1-9
↓	18	↓	5	D3-3	——	17	T3-5 *	——	*T3-7
20	TWP	RED	6	D3-4	——	16	T3-7 *	——	*T3-9
6 REF	14	YEL		C1-1	——		T3-6 *	——	*T3-8
20	10	BLU	8	T3-1	——	28	T2-2 *	——	*T2-4
↓	↓	BLU	9	T3-1	——	40	CB1-3	——	
		BLK	10	T3-2 *	——	18	T1-1	——	*T3-4
	10	BLK	11	T3-2 *	——	42	CB1-1	——	*T3-4
	14	RED	12	T3-3 *	——	38	C7-1 (POS)	——	*T3-5
	TWP	BLK	13	T3-4 *	——	39	C7-2	——	*T3-6
	14	YEL	14	T3-6 *	——	25	T1-6 *	——	*T3-8 & T1-8
↓	10	RED	19	T1-2 *	——	27	T2-1	——	*T1-4
20	10	RED	20	T1-2 *	——	41	CB1-2	——	*T1-4

WIRE TABLE

ITEM NO	DESCRIPTION AWG	COLOR	FROM POINT	FROM CONNECTION	FROM TERM	TO POINT	TO CONNECTION	TO TERM	REMARKS
20	14	BLK	21	T1-4 *	——	37	C6-2	——	*T1-6
↓	TWP	RED	22	T1-3 *	——	36	C6-1 (POS)	——	*T1-5
	14	YEL	26	T1-6 *	——	29	T2-6 *	——	*T1-8 T2-9
	14	RED	32	T2-3 *	——	35	C9-1 (POS)	——	*T2-5
20	TWP	BLK	33	T2-4 *	——	34	C9-2	——	*T2-6
37Δ	0 2	BLK	——	T1-12	——	9	——	——	Δ ITEM 58, 0 ITEM 72
38Δ	0 2	BLK	——	T2-12	——	10	——	——	Δ ITEM 59, 0 ITEM 73
39Δ	0 2	BLK	——	T3-12	——	11	——	——	Δ ITEM 60, 0 ITEM 74
40Δ	0 2	BLU	——	DA-11	——	5	——	——	Δ ITEM 61, 0 ITEM 75
41Δ	0 2	BLU	——	DA-10	——	6	——	——	Δ ITEM 62, 0 ITEM 76
42Δ	0 2	BLU	——	DA-9	——	7	——	——	Δ ITEM 63, 0 ITEM 77
43Δ	0 2	BLU	——	DA-12	——	8	——	——	Δ ITEM 64, 0 ITEM 78
36	18 10	WHT	——	CB1-8	——	——	——	——	
36	18 10	ORG	——	CB1-7	——	——	——	——	
36	18 10	RED	——	CB1-6	——	——	——	——	
36	18 10	BLK	——	CB1-5	——	——	——	——	
36	18 10	GRN	——	GND-1	——	——	——	——	
20	14	RED	43	C9-1 (POS)	——	45	C10-1 (POS)	——	
20	TWP	BLK	44	C9-2	——	46	C10-2	——	
20	14	RED	49	C6-1 (POS)	——	48	C5-1 (POS)	——	
20	TWP	BLK	50	C6-2	——	47	C5-2	——	
20	14	RED	53	C7-1 (POS)	——	51	C8-1 (POS)	——	
20	TWP	BLK	54	C7-2	——	52	C8-2	——	
G8	14	BLK	——	T3-2	G9	——	T3-3	G9	B&D ONLY

* FOR H760-B, H760-D VARIATION, TERMINATE TO CONNECTIONS LISTED UNDER "REMARKS" COLUMN.
Δ FOR H760-C, H760-D USE ITEMS LISTED IN "REMARKS" COLUMN.
□ FOR H760-E USE ITEMS LISTED IN REMARKS COLUMN.

REVISIONS REV.	CHANGE NO.	CHK.
J		

FIRST USED ON OPTION/MODEL	QTY.	DESCRIPTION / PART NO.	ITEM NO.
KLIØ		PARTS LIST	

UNLESS OTHERWISE SPECIFIED: DIMENSIONS IN INCHES; TOLERANCES: DECIMALS ± .XXX, FRACTIONS ± 1/64, ANGLES ± 0°30'; FINISH: SURFACE ROUGHNESS 125 MICRO INCHES MAXIMUM, BREAK SHARP EDGES 1/64 MAXIMUM

MATERIAL: SEE PARTS LIST

FINISH:

DRAWN 7-24-74 · CHECKED · ENGR APPROVED · MFG APPROVED

EQUIPMENT CORPORATION

TITLE: RAW POWER SUPPLY H760

NEXT HIGHER ASSY: D-UA-KLIØ-Ø-Ø

SCALE 1/1 · SHEET 2 OF 2

SIZE/CODE E UA · NUMBER H760-0-0 · REV. J · DWT.

H760-0-0 J UA B

AUTOMATED BY PRTLST.5R(55)

MR

SHEET A1 OF A3

PARTS LIST

LINE	ITEM	TOP DOCUMENT	PART NUMBER	MIN REV	DESCRIPTION	QTY PER VARIATION A	B	C	D	E
					VARIATION REVISION LEVEL:	-	-	-	-	-
1	1		7410892-00		CHASSIS POW SUPPLY-KL10	1	1	1	1	1
2	2		7009409-00		DIODE HEAT SINK ASSY (H760-A)	1	1	1	1	1
3	3		1611490-00		*** THIS ITEM IS NOT USED ***	-	-	-	-	-
4	4		7410893-00		PLATE MOUNT-KL10	3	3	3	3	3
5	5		1611491-00		XFMRF P=AB S=120C @200A	3	-	3	-	3
6	6		7009410-01		PLATE MTG COMP ASSY 60HZ.	1	-	1	-	1
7	7		7410903-00		HINGE REWORK KL10	1	1	1	1	1
8	8		7410902-02		COVER ANGLE MTG KL10	1	1	1	1	1
9	9		7410902-01		COVER ANGLE MTG KL10	1	1	1	1	1
10	10		9008203-00		NUT,HEX EXT TOOTH LCKWSHR 1/4-20	22	22	22	22	22
11	11		9006057-02		SCREW,MACH FLAT PHIL 1/4-	6	6	6	6	6
12	12		9008196-00		FASTENER,1/4 TURN RECP	12	12	12	12	12
13	13		9009255-00		LABEL, POWER SUPPLY, 2-15/16 " L	1	1	1	1	1
14	14		9007031-00		TIE,CABLE BUNDL.DIA 0- 3/4"=101	12	12	12	12	12
15	15		9003185-00		NUT,HEX EXT TOOTH LCKWSHR 6-32	12	12	12	12	12
16	16		9007786-00		RETAINER,U-NUT 10-32X	16	16	16	16	16
17	17		9006072-01		SCREW,MACH PAN PHIL 10-	27	27	27	27	27
18	18		9006565-00		NUT,HEX EXT TOOTH LCKWSHR 10-32	11	11	11	11	11
19	19		9008922-09		SCREW,MACH HEX PLN 3/8-	19	19	19	19	19
20	20		7009744-00		HARNESS (H760-A)	1	1	1	1	1
21	21		1211514-00		TERM,RING .250STUD FLAG	12	12	12	12	12
22	22		9107764-66		WIRE, 02AWG(665/30)IPVC 600V1	A/R	A/R	A/R	A/R	A/R
23	23		7009772-00		SCREEN WELDMENT #2-KL10 (H760)	1	1	1	1	1
24	24		7411558-01		COVER PROTECT #3 (KL10)-7X14	1	1	1	1	1
25	25		9006639-00		WASHER,LOCK INTERNAL STEEL	19	19	19	19	19
26	26		7411586-00		PLATE PROTECTION KL10	1	1	1	1	1
27	27		7411558-02		COVER PROTECT #3 (KL10)-8X14	1	1	1	1	1
28	28		7009773-00		SCREEN WELDMENT #2 KL10 (H760)	1	1	1	1	1
29	29		7410898-00		COVER P.S. KL10	1	1	1	1	1
30	30		9006071-01		*** THIS ITEM IS NOT USED ***	-	-	-	-	-

REVISION HISTORY			BASIC PART NO: H760									
ENG	ECO NUMBER	REV	SECTION A OF A	DRN: V.SOUZA	DATE: 16-JAN-74	D I G I T A L						
	INITIAL	J	SECTION.VARIATION INDEX [A]A ,B ,C ,D ,E	CHK'D: D.HEALY	DATE: 28-JAN-74	TITLE PARTS LIST RAW POWER SUPPLY						
			[B]	DES.ENG: J.DREW	DATE: 6-SEPT-74	DOCUMENT NUMBER						
			[C]			SIZE	CODE	NUMBER	REV			
			[D]	RESP.ENG.: ROBAINE	DATE: 28-JAN-74	K	PL	H760-0-DBP	J			
			[E]	MFG.ENG.: D.HEALY	DATE: 6-SEPT-74	RELEASE DATE: 06-MAR-84						
			[F]	ASSEMBLY NUMBER: E-UA-H760-0-DBP	TOP DOCUMENT NUMBER: E-UA-H760-0-DBP	FILE NAME: Z6850J.PLS	EDIT #: 8					

"THIS DRAWING AND THE SPECIFICATIONS CONTAINED HEREIN ARE CONFIDENTIAL AND PROPRIETARY. THEY ARE THE PROPERTY OF DIGITAL EQUIPMENT CORPORATION AND SHALL NOT BE REPRODUCED OR COPIED OR USED IN WHOLE OR IN PART AS THE BASIS FOR THE MANUFACTURE OR SALE OF ITEMS WITHOUT WRITTEN PERMISSION. THIS IS AN UNPUBLISHED WORK PROTECTED UNDER THE FEDERAL COPYRIGHT LAWS."

MRO

K

MR

AUTOMATED BY PRTLST.5R(55)

SHEET A2 OF A3

PARTS LIST

LINE	ITEM	TOP DOCUMENT	PART NUMBER	MIN REV	DESCRIPTION	QTY PER VARIATION A	B	C	D	E
					VARIATION REVISION LEVEL:	-	-	-	-	-
31	31		9008415-00		WASHER,FLAT SST	10	10	10	10	10
32	32		9006635-00		WASHER,LOCK INTERNAL STEEL	21	21	21	21	21
33	33		9006593-00		NUT,HEX 3/8-16K .557AF SS/N	19	19	19	19	19
34	34		9007013-00		GROMMET,ROUND RUBBER	1	1	1	1	1
35	35		1211198-03		STRAIN RELIEF FOR PWR CORD	1	1	1	1	1
36	36		7011036-00		POWER CORD [H760]	1	1	1	1	-
37	37		7010844-01		CABLE POWER NO.1 KL10 5FT	1	1	-	-	-
38	38		7010844-02		CABLE POWER NO.1 KL10 6FT	1	1	-	-	-
39	39		7010844-03		CABLE POWER NO.1 KL10 6FT-8INCH	1	1	-	-	-
40	40		7010845-01		CABLE POWER NO.2 KL10 4FT-4INCH	1	1	-	-	-
41	41		7010845-02		CABLE POWER NO.2 KL10 4FT-2INCH	1	1	-	-	-
42	42		7010845-03		CABLE POWER NO.2 KL10 4FT-11.75	1	1	-	-	-
43	43		7010845-04		CABLE POWER NO.2 KL10 4FT-3INCH	1	1	-	-	-
44	44		1611985-00		XFMRF P=B S=-12DC@200A T	-	3	-	3	-
45	45		7413131-00		BRKT MTG NO 1 CAP H760	1	1	1	1	1
46	46		7010838-00		SUPPORT CAP WELDMENT H760	1	1	1	1	1
47	47		7009410-02		PLATE MTG COMP ASSY 50HZ	-	1	-	1	-
48	48		9007772-11		*** THIS ITEM IS NOT USED ***	-	-	-	-	-
49	49		9007032-00		TIE,CABLE BUNDL.DIA 0-1-3/4"=101	12	12	12	12	12
50	50		9006074-02		*** THIS ITEM IS NOT USED ***	-	-	-	-	-
51	51		9009002-00		TERM BLOCK JUMPER	-	2	-	2	-
52	52		9006653-00		WASHER,FLAT STEEL	12	12	12	12	12
53	53		9006071-03		SCREW,MACH TRUSS PHIL 10-	4	4	4	4	4
54	54		9007857-00		GROMMET,ROUND RUBBER	1	1	1	1	1
55	55		7413454-00		SUPPORT COVER	1	1	1	1	1
56	56		9009309-02		NUT,LOCK 1-11-1/2 S/T	1	1	1	1	1
57	57		9007651-00		WASHER,LOCK EXTERNAL STEEL	1	1	1	1	1
58	58		7012467-00		POWER CABLE 3 (4FT 6INS)	-	-	1	1	-
59	59		7012467-01		POWER CABLE 3 (5FT.4INS)	-	-	1	1	-
60	60		7012467-02		POWER CABLE 3 (5FT.9IN)	-	-	1	1	-
61	61		7012468-00		CABLE ASSY (KL10-C)	-	-	1	1	-
62	62		7012468-01		POWER CABLE 4 (4FT-3IN)	-	-	1	1	-
63	63		7012468-02		POWER CABLE 4 (5FT-1IN)	-	-	1	1	-
64	64		7012468-03		POWER CABLE 4 (5FT-2IN)	-	-	1	1	-
65	65		9009309-00		NUT,LOCK 1/2-14 S/T	-	-	7	7	7
66	66		9008264-00		MOUNT, CABLE TIE, ADHESIVE BACKE	3	3	3	3	3
67	67		9009157-00		ADH,LIQ.RM.TEMP CURING COLORLESS	A/R	A/R	A/R	A/R	A/R
68	68		9107370-00		WIRE, 14AWG19/.0147IPVC 150V	-	A/R	-	A/R	-
69	69		9007927-00		TERM,RING #5,6STUD CRIMP 14-1	-	2	-	2	-
70	70		7417235-00		DRIP SCREEN	1	1	-	-	-
71	71		9006784-00		/REPLACED BY 90-06724-00	18	18	18	18	18
72	72		7020493-00		POWER CABLE NO. 5	-	-	-	-	1
73	73		7020493-01		POWER CABLE NO. 5	-	-	-	-	1
74	74		7020493-02		POWER CABLE NO. 5	-	-	-	-	1
75	75		7020493-03		POWER CABLE NO. 5	-	-	-	-	1
76	76		7020493-04		CABLE POWER 5	-	-	-	-	1
77	77		7020493-05		CABLE POWER 5	-	-	-	-	1
78	78		7020493-06		CABLE POWER 5	-	-	-	-	1

DIGITAL	TITLE	SECTION	SIZE	CODE	DOCUMENT NUMBER	REV
	RAW POWER SUPPLY	A OF A	K	PL	H760-0-DBP	J

MRO

A

K

MR

AUTOMATED BY PRTLST.5R(55)

SHEET A3 OF A3

P A R T S L I S T

LINE ITEM	TOP DOCUMENT	PART NUMBER	MIN REV	DESCRIPTION	QTY PER VARIATION A	B	C	D	E
				VARIATION REVISION LEVEL:	-	-	-	-	-
79	79	7011036-01		POWER CORD H760	-	-	-	-	1

D I G I T A L	TITLE RAW POWER SUPPLY	SECTION A OF A	SIZE K	CODE PL	DOCUMENT NUMBER H750-0-DBP	REV J

MRO

FAN
FAN
DIODE ASSEMBLY FANS
*18 AWG TWP RED/BLK
3—*2 AWG BLK RTN
ØA BLK 30A
ØB RED
ØC BLU
N WHT
I1
I2
I3
C3 .1µf 440VAC
C4 .1µf 440VAC
10 AWG BLK
10 AWG RED
C5 24µf 660VAC
(2) 12 UF CAPS
T1
*2 AWG BLU
*2 AWG BLU
*18 AWG RED
YEL
*18 AWG RED
MATE-N-LOK ON COVER PANEL
18 AWG BLK
18 AWG RED
18 AWG BLU
18 AWG WHT
18 AWG WHT
10 AWG RED
10 AWG BLU
C6 24µf 660VAC
(2) 12 UF CAPS
T2
*2 AWG BLU
*2 AWG BLU
*18 AWG RED
YEL
*18 AWG RED
10 AWG BLU
10 AWG BLK
C7 24µf 660VAC
(2) 12 UF CAPS
T3
*2 AWG BLU
*2 AWG BLU
YEL
*18 AWG RED
*18 AWG RED
D1
D2
D3
D4
D5
D6
D7
D8
D13
D14
D9
D16
D15
D6
D11
D12
D17
D18
MRA363R
MDA980
MDA980
MDA980
4—*2 AWG BLU -12V
F1 5A
*14 AWG ORN
-15V 4A
C1 50,000µf 25V
R1 25Ω 25W
*14 AWG YELLOW
RTN
C2 30,000µf 25V
R2 25Ω 25W
F2 3A
*14 AWG GRN
+15V 2A

10	H760 ADDED 12 UF CAPS	J DREW	8/26/75
9	H760-HAOC-8 INITIAL RELEASE	J DREW	7-7-75

FIRST USED ON OPTION/MODEL	H76Ø		
UNLESS OTHERWISE SPECIFIED DIMENSION IN INCHES	TOLERANCES		
DECIMALS	ANGLES		
.XXX ± .005 .XX ± .02 .X ± .1	±0° 30'		
REMOVE BURRS AND BREAK SHARP CORNERS SURFACE QUALITY ▽			
MATERIAL			
FINISH			

QTY.	DESCRIPTION	PART NO.	ITEM NO.
PARTS LIST			

DRN. K. Donahue	DATE 8/26/75	digital EQUIPMENT CORPORATION MAYNARD, MASSACHUSETTS
CHK'D [illegible]	DATE 7/14/75	
ENG. [illegible]	DATE 7/14/75	
PROJ. [illegible]	DATE 7/14/75	TITLE RAW SUPPLY
APPD. [illegible]	DATE 7-7-75	
NEXT HIGHER ASSY.		SIZE D CODE CS NUMBER H76ØA-Ø-1 REV. 8
SCALE		
SHEET 1 OF 1		DIST.

DIGITAL EQUIP. CORP.

WIRE TABLE

ITEM NO.	DESCRIPTION AWG	COLOR	FROM CONN	FROM WITH	TO CONN	TO WITH
7	18 TWP	RED	FAN2-A	11 + 12	FAN1-A*	11 + 12
		WHT	FAN2-B	11 + 12	FAN1-B*	11 + 12
7	18 TWP	RED	FAN1-A**	11 + 12	—	13
		WHT	FAN1-B**	11 + 12	—	13

*CRIMP ITEM #12 TO BOTH RED TWP
**CRIMP ITEM #12 TO BOTH WHT TWP

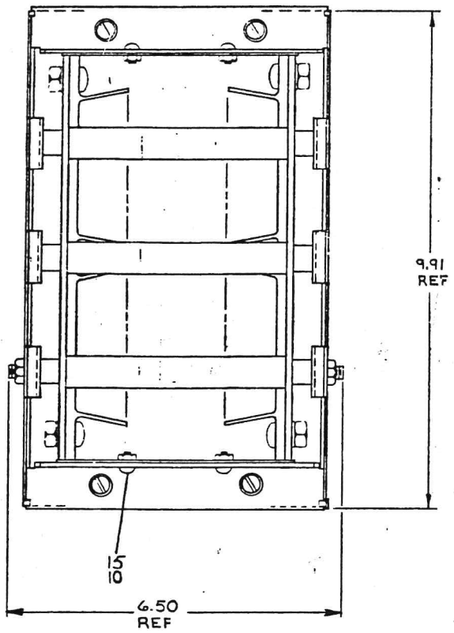

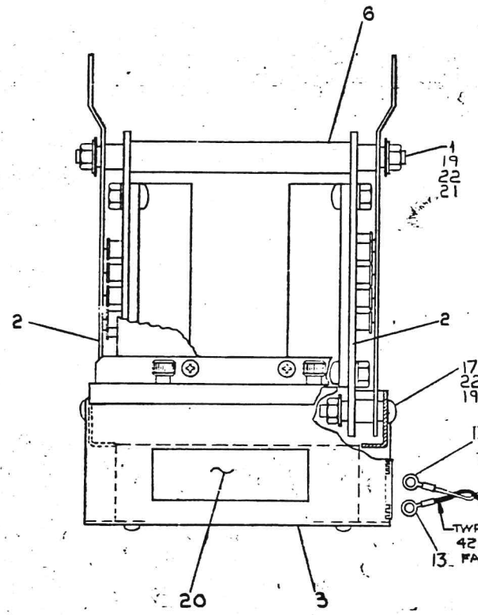

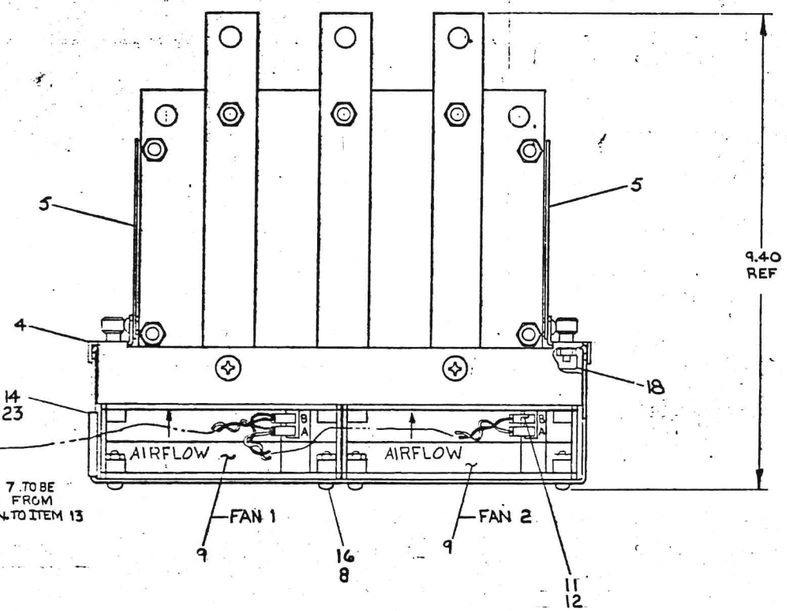

A/R	ADHESIVE, HYBOND 80	9007694	23
10	WASH, FLAT .625OD x .281ID x .06	9007792	22
6	WASHER, NYLON	9009646	21
1	LABEL, ADHESIVE BACKED	9009255	20
.10	NUT, KEPS 1/4-20	9008203	19
4	NUT, SPRING	9007786	18
4	SCREW, PHL PAN HD 1/4-20 x 1.25	9009430-1	17
8	SCREW, PHL PAN HD 6-32 x .63	9006023-1	16
4	SCREW, PHL PAN HD 8-32 x .312	9006036-1	15
A/R	GROMMET	9007646	14
2	CONN, SOLDERLESS, RED	9007930	13
4	FASTAB TERMINAL	1210820-9	12
4	FASTAB SOCKET HSG	1210820-1	11
4	NUT, KEPS 8-32	9008583	10
2	FAN, SUPER BOXER	1210930	9
8	NUT, KEPS 6-32	9008580	8
A/R	18 AWG TWP RED/WHT	9107430-29	7
3	SPACER	9009631	6
2	PANEL, BAFFLE	BMC-7411940-0-0	5
1	HEAT SINK SUPPORT	BMC-7411938-0-0	4
1	FAN, BRACKET	BMC-7411936-0-0	3
2	DIODE ASSEMBLY	1111695	2
3	ROD, THREADED	BMC-7411475-0-0	1
QTY.	DESCRIPTION	PART NO.	ITEM NO.

PARTS LIST

FIRST USED ON OPTION/MODEL: KLIØ

UNLESS OTHERWISE SPECIFIED DIMENSIONS IN INCHES. TOLERANCES: DECIMALS .XXX ± .005, .XX ± .01, .X ± .1; ANGLES ±0°30'. REMOVE BURRS AND BREAK SHARP CORNERS. SURFACE QUALITY √. MATERIAL: SEE PARTS LIST. NEXT HIGHER ASSY.

DRAWN 11/11/83 — CHK'D 11/14/83 — ENGR 11/14/83 — PROJ ENGR — PROD 11/14/83

EQUIPMENT CORPORATION

TITLE: DIODE HEAT SINK ASSY

SIZE C — NUMBER 7009409-0-0 — REV. E — SHEET 1 OF 1

REVISIONS			
LTR	DESCRIPTION	DATE	APPROVED
A	209409-00001 RELEASED	11/14/83	
B	209409-00002 RELEASED	12/20/83	
C	768-00005	1/18/84	

THIS DRAWING AND SPECIFICATIONS, HEREIN, ARE THE PROPERTY OF DIGITAL EQUIPMENT CORPORATION AND SHALL NOT BE REPRODUCED OR COPIED OR USED IN WHOLE OR IN PART AS THE BASIS FOR THE MANUFACTURE OR SALE OF ITEMS WITHOUT PRIOR WRITTEN PERMISSION.
COPYRIGHT © 1974 DIGITAL EQUIPMENT CORPORATION

LEGEND	
NUMBER	VARIATION
7009410-1	H760-A 60 HZ
7009410-2	H760-B 50 HZ

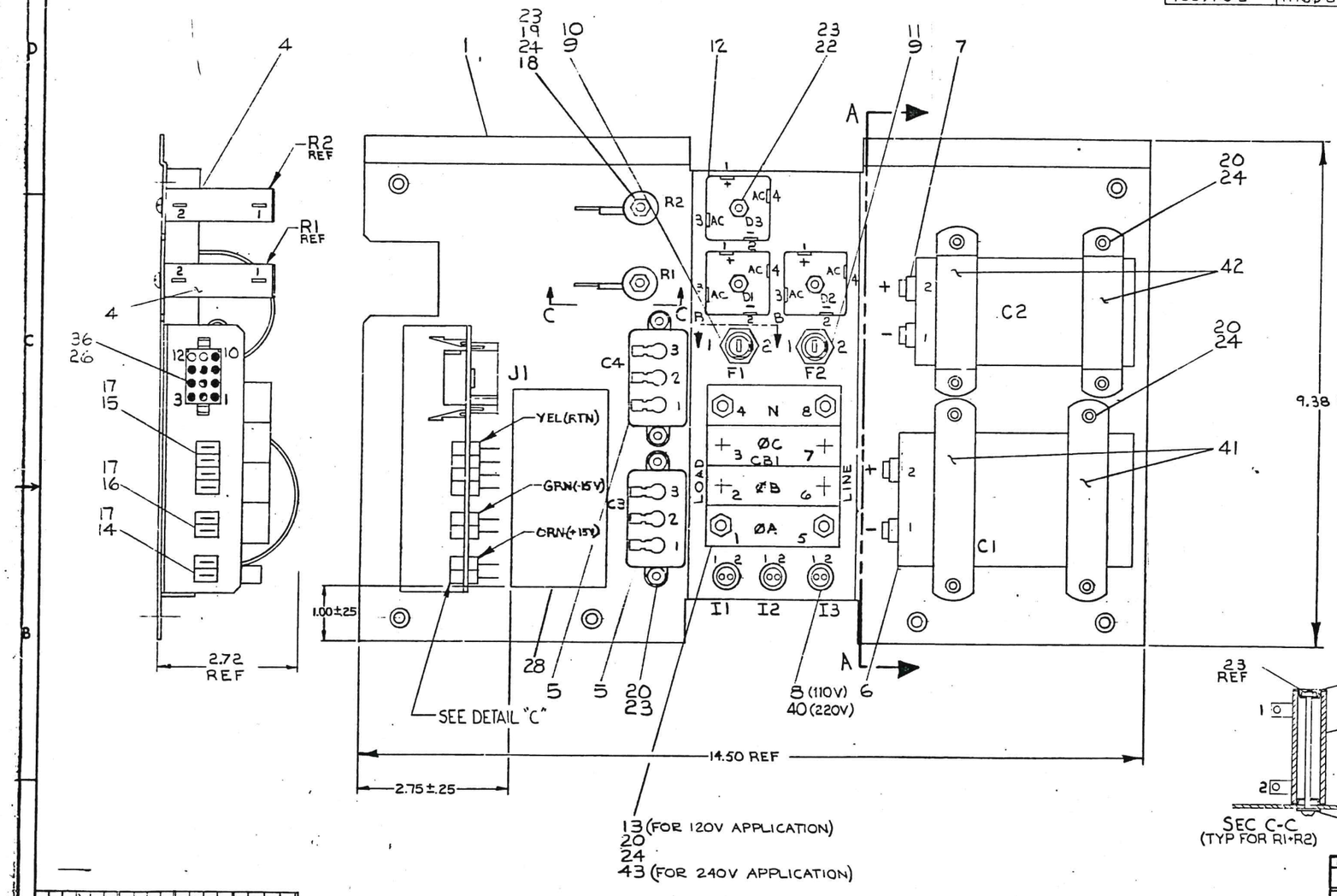

7009410-2	7009410-1			
1	-	CIRCUIT BREAKER 15A 240V	1212321-01	43
2	2	CAP. MTG BRKT #1	1214483-0-0	42
2	2	CAP. MTG BRKT #2	7014453-0-0	41
3	-	LAMP, PILOT	1202556	40
11	11	CONNECTOR (BLUE)	9007928	39
5	5	TIES, CABLE	9007031	38
A/R	A/R	#18 AWG WIRE STRD INS (WHITE)	9107360-99	37
1	1	CONN. MAT-N-LOK 12 SKT	1209350-12	36
6	6	CONN. SOLDERLESS	9007694-0	35
A/R	A/R	#14 AWG WIRE STRD INS (YELLOW)	9107370-44	34
A/R	A/R	#14 AWG WIRE STRD INS (GREEN)	9107370-55	33
A/R	A/R	#14 AWG WIRE STRD INS (ORANGE)	9107370-33	32
A/R	A/R	#18 AWG WIRE STRD INS (ORANGE)	9107360-33	31
A/R	A/R	#18 AWG WIRE STRD INS (RED)	9107360-22	30
A/R	A/R	#18 AWG WIRE STRD INS (BLACK)	9107360-00	29
1	1	LABEL, ADHESIVE BACKED	9009255	28
6	6	CONNECTOR (RED)	9007930-0	27
10	10	FEMALE CONTACT	1209371-01	26
13	13	CONNECTOR (BLUE)	9007919-0	25
18	18	INT TOOTH LOCK WASHER #6	9006633	24
9	9	KEP NUT #6-32	9008135	23
3	3	PHL PAN HD SCR #6-32 x .56 LG.	9007793-1	22
~~A/R~~	~~A/R~~	~~TAPE, ADHESIVE BACKED .50 WD~~	~~9007851~~	~~21~~
20	20	PHL PAN HD SCR #6-32 x .31 LG	9006021-1	20
4	4	WASHER, CENTERING	9006674	19
2	2	PHL PAN HD SCR #6-32 x 2.12 LG	9007850-1	18
8	8	TERMINAL INSERT	9007238	17
2	2	BUSH. JUNC. TERM (GRN)	9007236	16
4	4	BUSH. JUNC. TERM (YEL)	9007233	15
2	2	BUSH. JUNC. TERM (ORN)	9007234	14
-	1	CIRCUIT BREAKER 5A 240V	1211037-02	13
3	3	DIODE PACK	1111068	12
1	1	FUSE 3A	9007217	11
1	1	FUSE 5A	9007221	10
2	2	FUSE HOLDER	9007242	9
-	3	LAMP, PWR ON IND (RED)	1211263	8
1	1	CAPACITOR 30,000 MFD 25 VDC	1010184	7
1	1	CAPACITOR 50,000 MFD 25 VDC	1009967-0	6
2	2	CAPACITOR 2X-IMFD, 440 VAC	1010193	5
2	2	RESISTOR 35 OHM 25W 1.0%	1303190	4
~~1~~	~~1~~	~~CAP MTG BRKT #3~~	~~7014454-0-0~~	~~3~~
~~1~~	~~1~~	~~CAP MTG BRKT #4~~	~~7014455-0-0~~	~~2~~
1	1	COMPONENT MTG PLATE	7009410-0-0	1

REVISIONS			
CHK	CHANGE NO.	REV.	
RH	H760-00001	A	18 Aug 77
RH	H760-00002	B	19 Aug 77
RH	7009410-00001	C	18 Aug 77
RH	H760-00008	D	17 Mar 78

DRN	J. DIEW	2 Aug 77
CHK	R. Heard	2 Aug 77
ENG	J. Hayward	2 Aug 77
FROJ. ENG.		
PROD.		

FIRST USED ON OPTION/MODEL	QTY.	DESCRIPTION	PART NO.
KLIØ		PARTS LIST	

UNLESS OTHERWISE SPECIFIED DIMENSION IN INCHES
TOLERANCES
DECIMALS: .XXX = .005, .XX = .02, .X = .1
ANGLES: ±0° 30'
REMOVE BURRS AND BREAK SHARP CORNERS SURFACE QUALITY √
MATERIAL
FINISH
NEXT HIGHER ASSY. D-UA-4760-Ø-Ø
SCALE NONE
SHEET 1 OF 2

digital EQUIPMENT CORPORATION MAYNARD MASSACHUSETTS

TITLE: COMPONENT MTG PLATE ASSY

SIZE	CODE	NUMBER	REV.
D	80	7009410-0-0	D

DIST.

SEC FORM NO GRD 105-8

"THIS DRAWING AND SPECIFICATIONS, HEREIN, ARE THE PROPERTY OF DIGITAL EQUIPMENT CORPORATION AND SHALL NOT BE REPRODUCED OR COPIED OR USED IN WHOLE OR IN PART AS THE BASIS FOR THE MANUFACTURE OR SALE OF ITEMS WITHOUT WRITTEN PERMISSION.
COPYRIGHT © 1973, DIGITAL EQUIPMENT CORPORATION"

WIRE TABLE

ITEM NO.	DESCRIPTION AWG	COLOR	FROM POINT	FROM CONNECTION	FROM WITH	TO POINT	TO CONNECTION	TO WITH
8	*22	*BLK	——	I1-2	——	——	CB1-4	27
8	*22	*BLK	——	I2-2	——	——		27
8	*22	*BLK	——	I3-2	——	——		27
8	*22	*BLK	——	I1-1	——	——	CB1-1	39
29	18	BLK	——	J1-1	26	——		
29	18	BLK	——			——	J1-4	26
8	*22	*BLK	——	I2-1	——	——	CB1-2	39
30	18	RED	——	J1-2	26	——		
30	18	RED	——			——	J1-5	26
8	*22	*BLK	——	I3-1	——	——	CB1-3	39
31	18	ORN	——	J1-3	26	——		
31	18	ORN	——			——	J1-6	26
29	18	BLK	——	C3-1	SOLD	——	CB1-1	27
29	18	BLK	——	C3-2	SOLD	——	CB1-2	39
29	18	BLK	——	C4-1	SOLD	——		
29	18	BLK	——	C3-3	SOLD	——	CB1-3	39
29	18	BLK	——	C4-2	SOLD	——		
32	14	ORN	——	D1-1	25+35	——	D2-1	25+35
32	14	ORN	——	D2-1	25	——	D3-1	25+35
32	14	ORN	——	D3-1	25	——	C1-2(POS)	39
32	14	ORN	——	R1-1	SOLD	——	D1-1	25
32	14	ORN	——			——	F1-2	SOLD
32	14	ORN	——	F1-1	SOLD	——	**+15(ORG)	17+SOLD
33	14	GRN	——	D1-2	25+35	——	D2-2	25+35
33	14	GRN	——	D2-2	25	——	D3-2	25+35
33	14	GRN	——	D3-2	25	——	C2-1(NEG)	39
33	14	GRN	——	R2-1	SOLD	——	D1-2	25
33	14	GRN	——			——	F2-2	SOLD
33	14	GRN	——	F2-1	SOLD	——	**-15(GRN)	17+SOLD
34	14	YEL	——	C1-1(NEG)	39	——	C2-2(POS)	39
34	14	YEL	——	C2-2(POS)	39	——	R1-2	SOLD
34	14	YEL	——	R1-2	SOLD	——	R2-2	SOLD
34	14	YEL	——	R2-2	SOLD	——	**RTN(YEL)	17+SOLD
37	18	WHT	——	J1-10	26	——	CB1-4	27
37	18	WHT	——			——	J1-7	26
34	14	YEL	——	C1-1 (NEG)	39	——	——	25
37	18	WHT	——	CB1-4	27	——	J1-8	26
37	18	WHT	——	J1-9	26	——		

* #22 AWG BLK WIRE PART OF INDICATOR LAMP ITEM #8

** SEE DETIAL "C"

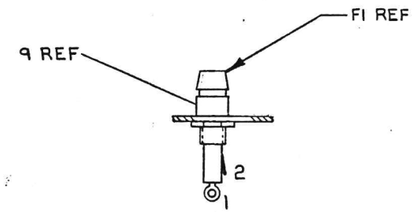

SECTION B-B
(TYP FOR F1, F2)

DETAIL "C"
(BUS YEL, GRN & ORN WIRES AS SHOWN) TURNED TO SHOW TERMINALS

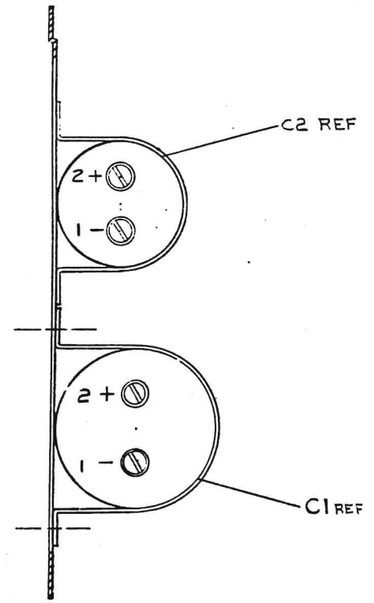

SECTION A-A

REVISIONS		
CHK	CHANGE NO.	REV

TITLE	SIZE	CODE	NUMBER	REV
COMPONENT ASSY.	D	AD	7009-10-0-0	D
SCALE 1/1	SHEET 2 OF 2		DIST.	

"THIS DRAWING AND SPECIFICATIONS, HEREIN, ARE THE PROPERTY OF DIGITAL EQUIPMENT CORPORATION AND SHALL NOT BE REPRODUCED OR COPIED OR USED IN WHOLE OR IN PART AS THE BASIS FOR THE MANUFACTURE OR SALE OF ITEMS WITHOUT WRITTEN PERMISSION.
COPYRIGHT © 1976, DIGITAL EQUIPMENT CORPORATION"

NOTE: CBB INDICATES COLLECTOR BUS
PB INDICATES POWER BUS

-12V BUS BAR MOUNTED ON CIRCUIT BREAKER POSTS

CB-11 CB-12 CB-13 CB-14 CB-1 CB-2 CB-3 CB-4 CB-5 CB-6 CB-7 CB-8 CB-9 CB-10

#8 AWG

HSA1: PB1, CBB1, CBB2, PB2 → TB4-1, TB4-3
HSA2: PB1, CBB1, CBB2, PB2 → TB4-5, TB4-7
HSA3: PB1, PB2, PB3, PB4, CBB1, CBB2, CBB3, CBB4 → TB2-1, TB2-3, TB2-5, TB2-7
HSA4: PB1, PB2, PB3, PB4, CBB1, CBB2, CBB3, CBB4 → TB3-1, TB3-3, TB3-5, TB3-7
HSA5: PB1, CBB1, CBB2, PB2 → TB1-3, TB1-1

#18 AWG

J8
MATE N LOK.

CONTROL LOGIC

RTN 1 THRU 4: BUSSING BARS MOUNTED ON TERMINAL BLOCKS

RTN 1
RTN 2
RTN 3
RTN 4

TB1
HSA5-CBB1 → 010 (-) -5.2K
HSA5-CBB2 → 020 (+)
030 (-) -5.2L
040 (+)
050
060
070
080

TB2
HSA3-CBB1 → 010 (-) -5.2A
HSA3-CBB2 → 020 (+)
030 (-) -5.2B
HSA3-CBB3 → 040 (+)
050 (-) -5.2C
HSA3-CBB4 → 060 (+)
070 (-) -5.2D
080 (+)

TB3
HSA4-CBB1 → 010 (-) -5.2E
HSA4-CBB2 → 020 (+)
030 (-) -5.2F
HSA4-CBB3 → 040 (+)
050 (-) -5.2H
HSA4-CBB4 → 060 (+)
070 (-) -5.2J
080 (+)

TB4
HSA1-CBB1 → 010 (-) -2.0A
HSA1-CBB2 → 020 (+)
030 (-) -2.0B
HSA2-CBB1 → 040 (+)
050 (-) -2.0C
HSA2-CBB2 → 060 (+)
070 (-) -2.0D
080 (+)

#8 AWG

REVISIONS			
CHK	CHANGE NO.	REV.	
JM	H761 M10006	A	
J Clark	6 OCT 78		
J MCELROY	10/24/78		

FIRST USED ON OPTION/MODEL	QTY.	DESCRIPTION	PART NO.	ITEM NO.
H761		PARTS LIST		

DIMENSIONAL TOLERANCE
DIMENSIONS ARE MILLIMETERS / INCHES UNLESS OTHERWISE SPECIFIED

MILLIMETERS	INCHES	ANGLES
XXX = ±0,10	XXX = ±.005	±0° 30'
XX = ±0,5	XX = ±.02	
X = ±2,	X = ±.1	

THIRD ANGLE PROJECTION

REMOVE BURRS AND BREAK SHARP CORNERS SURFACE QUALITY ✓

MATERIAL

FINISH

DRN.	DATE	4/24/78
CHK'D	DATE	7/20/78
ENG	DATE	7/20/78
PROJ. ENG.	DATE	8/15/78
PROJ.	DATE	8/25/78

NEXT HIGHER ASSY.

SCALE

SHEET 1 OF 2

digital

TITLE: H761 (POWER) WIRING DIAGRAM

SIZE	CODE	NUMBER	REV.
D	IC	H761-0-8	A

DIST.

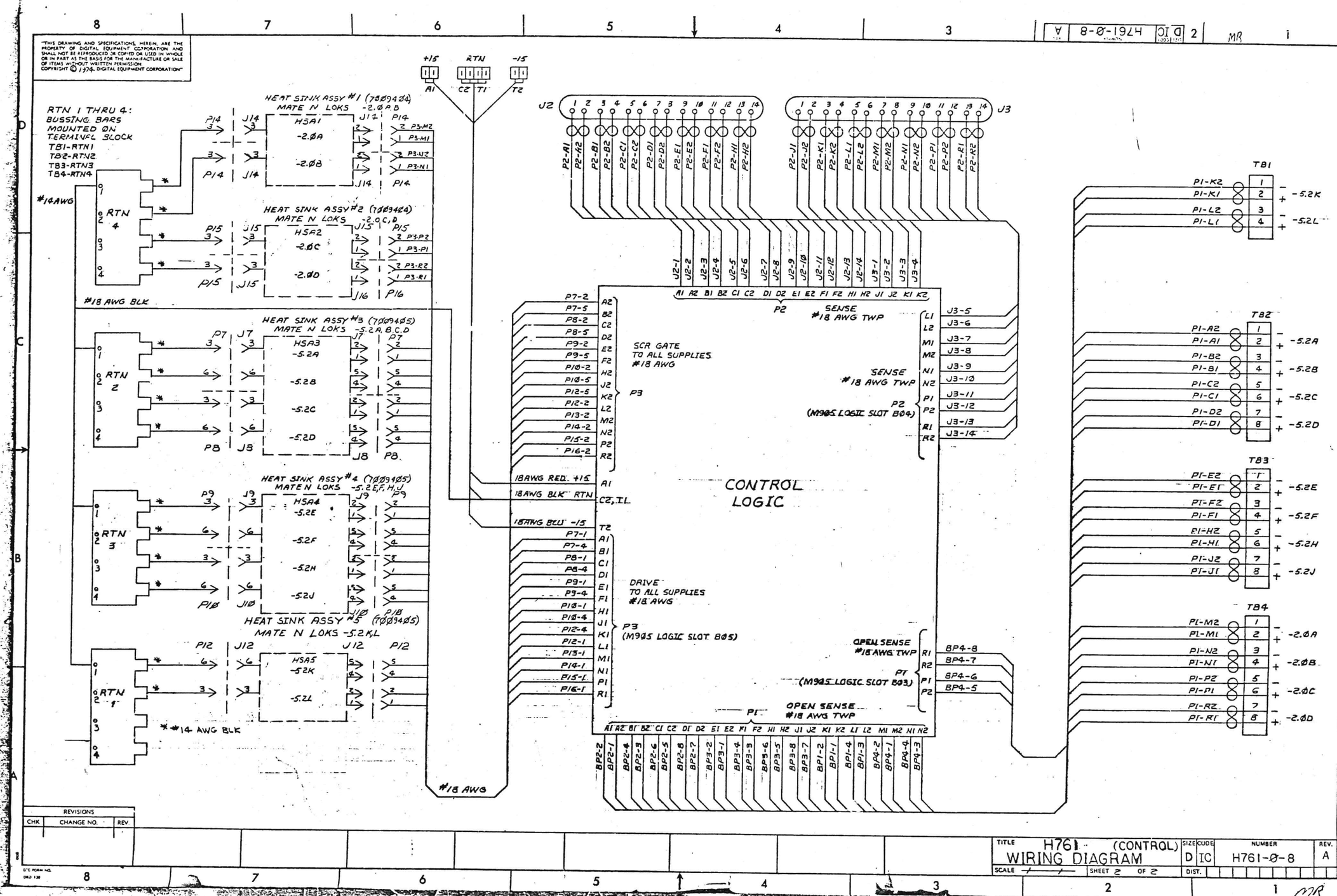

"THIS DRAWING AND SPECIFICATIONS, HEREIN, ARE THE PROPERTY OF DIGITAL EQUIPMENT CORPORATION AND SHALL NOT BE REPRODUCED OR COPIED OR USED IN WHOLE OR IN PART AS THE BASIS FOR THE MANUFACTURE OR SALE OF ITEMS WITHOUT WRITTEN PERMISSION. COPYRIGHT © 1974, DIGITAL EQUIPMENT CORPORATION"
RTN 1 THRU 4: BUSSING BARS MOUNTED ON TERMINAL BLOCK
TB1-RTN1
TB2-RTN2
TB3-RTN3
TB4-RTN4
#14AWG
#18 AWG BLK
*#14 AWG BLK
HEAT SINK ASSY #1 (7009404) MATE N LOKS -2.0A,B
HEAT SINK ASSY #2 (7009404) MATE N LOKS -2.0C,D
HEAT SINK ASSY #3 (7009405) MATE N LOKS -5.2A,B,C,D
HEAT SINK ASSY #4 (7009405) MATE N LOKS -5.2E,F,H,J
HEAT SINK ASSY #5 (7009405) MATE N LOKS -5.2K,L
RTN 4
RTN 2
RTN 3
RTN 1
+15
RTN
-15
J2
J3
SCR GATE TO ALL SUPPLIES #18 AWG
P3
SENSE #18 AWG TWP
P2 (M905 LOGIC SLOT B04)
CONTROL LOGIC
18AWG RED +15
18AWG BLK RTN
18AWG BLU -15
DRIVE TO ALL SUPPLIES #18 AWG
P3 (M905 LOGIC SLOT B05)
OPEN SENSE #18 AWG TWP
P1 (M905 LOGIC SLOT B03)
P1
#18 AWG
TB1
TB2
TB3
TB4
-5.2K
-5.2L
-5.2A
-5.2B
-5.2C
-5.2D
-5.2E
-5.2F
-5.2H
-5.2J
-2.0A
-2.0B
-2.0C
-2.0D
REVISIONS
CHK
CHANGE NO.
REV.
TITLE H761 (CONTROL) WIRING DIAGRAM
SIZE D
CODE IC
NUMBER H761-0-8
REV. A
SCALE
SHEET 2 OF 2
DIST.

...OR COPIED OR USED IN WHOLE OR IN PART FOR THE MANUFACTURE OR SALE OF ITS APPARATUS WITHOUT THE PERMISSION OF DIGITAL EQUIPMENT CORPORATION

NOTES:
1. USE TIE WRAPS (ITEM #36) ACCORDING TO DEC STANDARD 116.
2. COLOR DOT ON THERMOSTAT MATCHES COLOR OF POWER WIRING TO REGULATOR. (GREEN FOR -2.0V BLUE FOR -5.0V)

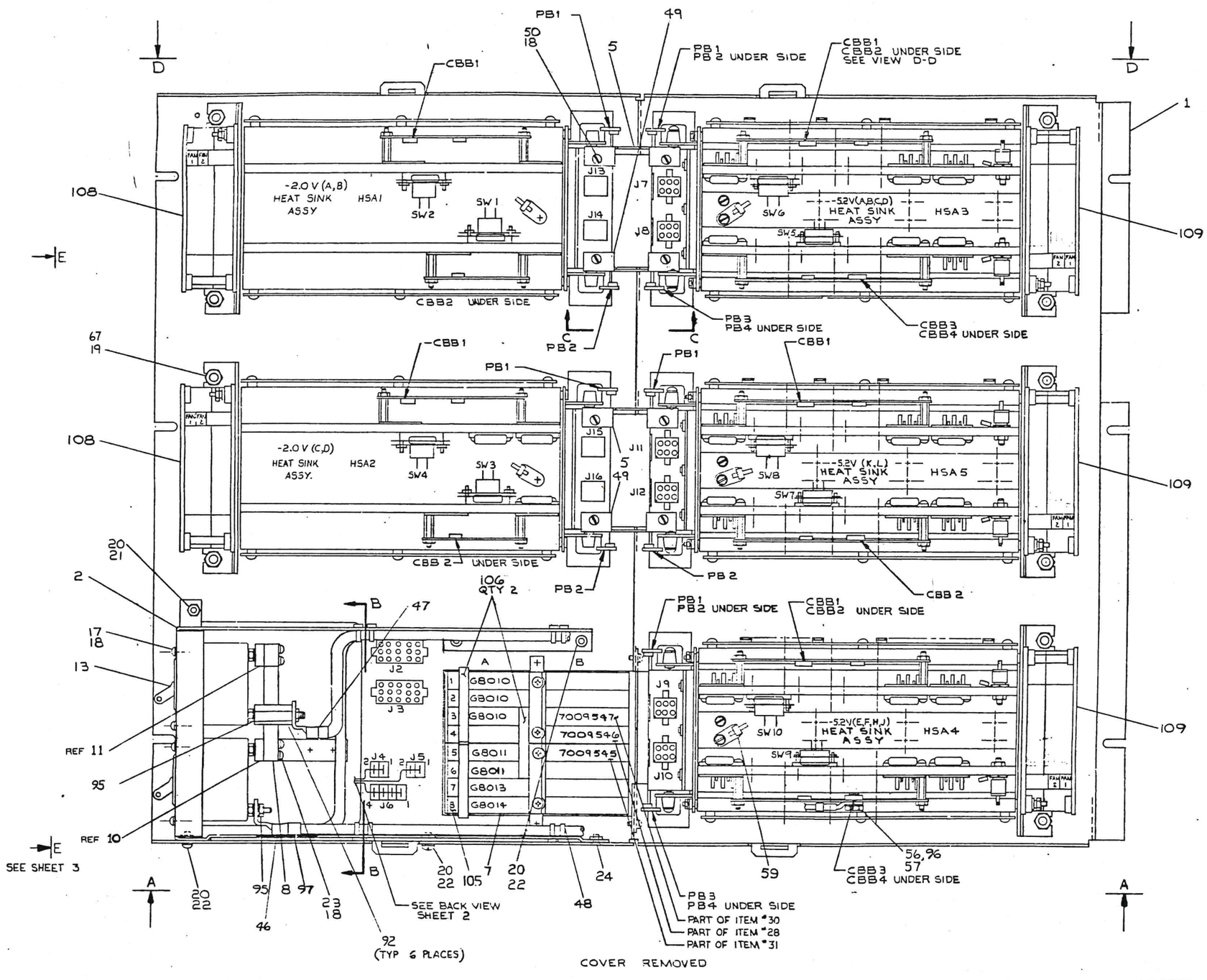

COVER REMOVED

CAUTION:
OFF SHEET PARTS LIST EXISTS

FIRST USED ON OPTION/MODEL	QTY.	DESCRIPTION	PART NO.	ITEM NO.
KL10		PARTS LIST		

DIMENSIONAL TOLERANCE
DIMENSIONS ARE MILLIMETERS / INCHES UNLESS OTHERWISE SPECIFIED

MILLIMETERS	INCHES	ANGLES
XXX ±0.5	XXX ±.005	±0° 30'
XX ±1.0	XX ±.02	
X ±2.	X ±.1	

THIRD ANGLE PROJECTION
REMOVE BURRS AND BREAK SHARP CORNERS SURFACE QUALITY √
MATERIAL SEE PARTS LIST
FINISH

	DATE
DRN.	
CHK'D.	
ENG.	
PROJ. ENG.	11-19-74
PROJ.	11-19-74

NEXT HIGHER ASSY.

digital

TITLE: REGULATED POWER SUPPLY

SIZE	CODE	NUMBER	REV.
D-UA-KL10-0-0	E UA	H761-0-0	K

SCALE 1/4

REVISIONS	DWN	DATE	CHANGE NO.	REV.
H761-00001	J. DREW	3-5-74		A
H761-M0016	J. DREW	3-5-74		B
H761-M0017	J. DREW	3-5-74		C
H761-M0018	J. DREW	3-5-74		D
H761-M0019	J. DREW	3-5-74		E
H761-M0020	J. DREW	3-5-74		F
H761-M0021	J. DREW	3-5-74		G
H761-M0022	J. DREW	3-5-74		H
H761-M0023	J. DREW	3-5-74		J
H761-M0024	J. DREW	3-5-74		K
H761-M0025	J. DREW	3-5-74		L
H761-M0026	J. DREW	3-5-74		M
H761-M0027	J. DREW	3-5-74		N
H761-M0028	J. DREW	3-5-74		P
H761-M0029	J. DREW	3-5-74		R
H761-M0030	J. DREW	3-5-74		S
H761-M0031	J. DREW	3-5-74		T
H761-M0032	J. DREW	3-5-74		U
H761-M0033	J. DREW	3-5-74		V
H761-M0034	J. DREW	3-5-74		W
H761-M0035	J. DREW	3-5-74		X
H761-M0036	J. DREW	3-5-74		Y
H761-M0037	J. DREW	3-5-74		Z
H761-M0038	J. DREW	3-5-74		AA
H761-M0039	J. DREW	3-5-74		AB
H761-M0040	J. DREW	3-5-74		AC
H761-M0041	J. DREW	3-5-74		AD
H761-M0042	J. DREW	3-5-74		AE
H761-M0043	J. DREW	3-5-74		AF
H761-M0044	J. DREW	3-5-74		AG
H761-M0045	J. DREW	3-5-74		AH
H761-M0046	J. DREW	3-5-74		AJ
H761-M0047	J. DREW	3-5-74		AK
H761-M0048	J. DREW	3-5-74		AL
H761-M0049	J. DREW	3-5-74		AM
H761-M0050	J. DREW	3-5-74		AN
H761-M0051	J. DREW	3-5-74		AP
H761-M0052	J. DREW	3-5-74		AR
H761-M0053	J. DREW	3-5-74		AS
H761-M0054	J. DREW	3-5-74		AT
H761-M0055	J. DREW	3-5-74		AU
H761-M0056	J. DREW	3-5-74		AV
H761-M0057	J. DREW	3-5-74		AW
H761-M0058	J. DREW	3-5-74		AX
H761-M0059	J. DREW	3-5-74		AY
H761-M0060	J. DREW	3-5-74		AZ
H761-M0061	J. DREW	3-5-74		BA
H761-M0062	J. DREW	3-5-74		BB
H761-M0063	J. DREW	3-5-74		BC
H761-M0064	J. DREW	3-5-74		BD
H761-M0065	J. DREW	3-5-74		BE
H761-M0066	J. DREW	3-5-74		BF
H761-M0067	J. DREW	3-5-74		BG
H761-M0068	J. DREW	3-5-74		BH
H761-M0069	J. DREW	3-5-74		BJ
H761-M0070	J. DREW	3-5-74		BK
H761-M0071	J. DREW	3-5-74		BL
H761-M0072	J. DREW	3-5-74		BM
H761-M0073	J. DREW	3-5-74		BN
H761-M0074	J. DREW	3-5-74		BP
H761-M0075	J. DREW	3-5-74		BR
H761-M0076	J. DREW	3-5-74		BS
H761-M0077	J. DREW	3-5-74		BT
H761-M0078	J. DREW	3-5-74		BU
H761-M0079	J. DREW	3-5-74		BV
H761-M0080	J. DREW	3-5-74		BW
H761-M0081	J. DREW	3-5-74		BX
H761-M0082	J. DREW	3-5-74		BY
H761-M0083	J. DREW	3-5-74		BZ
H761-M0084	J. DREW	3-5-74		CA
H761-M0085	J. DREW	3-5-74		CB
H761-M0086	J. DREW	3-5-74		CC
H761-M0087	J. DREW	3-5-74		CD
H761-M0088	J. DREW	3-5-74		CE
H761-M0089	J. DREW	3-5-74		CF
H761-M0090	J. DREW	3-5-74		CG
H761-M0091	J. DREW	3-5-74		CH
H761-M0092	J. DREW	3-5-74		CJ
H761-M0093	J. DREW	3-5-74		CK
H761-M0094	J. DREW	3-5-74		CL
H761-M0095	J. DREW	3-5-74		CM
H761-M0096	J. DREW	3-5-74		CN
H761-M0097	J. DREW	3-5-74		CP
H761-M0098	J. DREW	3-5-74		CR
H761-M0099	J. DREW	3-5-74		CS
H761-M0100	J. DREW	3-5-74		CT
H761-M0101	J. DREW	3-5-74		CU
H761-M0102	J. DREW	3-5-74		CV
H761-M0103	J. DREW	3-5-74		CW
H761-M0104	J. DREW	3-5-74		CX
H761-M0105	J. DREW	3-5-74		CY
H761-M0106	J. DREW	3-5-74		CZ
H761-M0107	J. DREW	3-5-74		DA
H761-M0108	J. DREW	3-5-74		DB
H761-M0109	J. DREW	3-5-74		DC
H761-M0110	J. DREW	3-5-74		DD
H761-M0111	J. DREW	3-5-74		DE
H761-M0112	J. DREW	3-5-74		DF
H761-M0113	J. DREW	3-5-74		DG
H761-M0114	J. DREW	3-5-74		DH
H761-M0115	J. DREW	3-5-74		DJ
H761-M0116	J. DREW	3-5-74		DK
H761-M0117	J. DREW	3-5-74		DL
H761-M0118	J. DREW	3-5-74		DM
H761-M0119	J. DREW	3-5-74		DN
H761-M0120	J. DREW	3-5-74		DP
H761-M0121	J. DREW	3-5-74		DR
H761-M0122	J. DREW	3-5-74		DS
H761-M0123	J. DREW	3-5-74		DT
H761-M0124	J. DREW	3-5-74		DU
H761-M0125	J. DREW	3-5-74		DV
H761-M0126	J. DREW	3-5-74		DW
H761-M0127	J. DREW	3-5-74		DX
H761-M0128	J. DREW	3-5-74		DY
H761-M0129	J. DREW	3-5-74		DZ
H761-M0130	J. DREW	3-5-74		EA
H761-M0131	J. DREW	3-5-74		EB
H761-M0132	J. DREW	3-5-74		EC
H761-M0133	J. DREW	3-5-74		ED
H761-M0134	J. DREW	3-5-74		EE
H761-M0135	J. DREW	3-5-74		EF
H761-M0136	J. DREW	3-5-74		EG
H761-M0137	J. DREW	3-5-74		EH
H761-M0138	J. DREW	3-5-74		EJ
H761-M0139	J. DREW	3-5-74		EK
H761-M0140	J. DREW	3-5-74		EL
H761-M0141	J. DREW	3-5-74		EM
H761-M0142	J. DREW	3-5-74		EN
H761-M0143	J. DREW	3-5-74		EP
H761-M0144	J. DREW	3-5-74		ER
H761-M0145	J. DREW	3-5-74		ES
H761-M0146	J. DREW	3-5-74		ET
H761-M0147	J. DREW	3-5-74		EU
H761-M0148	J. DREW	3-5-74		EV
H761-M0149	J. DREW	3-5-74		EW
H761-M0150	J. DREW	3-5-74		EX
H761-M0151	J. DREW	3-5-74		EY
H761-M0152	J. DREW	3-5-74		EZ
H761-M0153	J. DREW	3-5-74		FA
H761-M0154	J. DREW	3-5-74		FB
H761-M0155	J. DREW	3-5-74		FC
H761-M0156	J. DREW	3-5-74		FD
H761-M0157	J. DREW	3-5-74		FE
H761-M0158	J. DREW	3-5-74		FF
H761-M0159	J. DREW	3-5-74		FG
H761-M0160	J. DREW	3-5-74		FH
H761-M0161	J. DREW	3-5-74		FJ
H761-M0162	J. DREW	3-5-74		FK
H761-M0163	J. DREW	3-5-74		FL
H761-M0164	J. DREW	3-5-74		FM
H761-M0165	J. DREW	3-5-74		FN
H761-M0166	J. DREW	3-5-74		FP
H761-M0167	J. DREW	3-5-74		FR
H761-M0168	J. DREW	3-5-74		FS
H761-M0169	J. DREW	3-5-74		FT
H761-M0170	J. DREW	3-5-74		FU
H761-M0171	J. DREW	3-5-74		FV
H761-M0172	J. DREW	3-5-74		FW
H761-M0173	J. DREW	3-5-74		FX
H761-M0174	J. DREW	3-5-74		FY
H761-M0175	J. DREW	3-5-74		FZ
H761-M0176	J. DREW	3-5-74		GA
H761-M0177	J. DREW	3-5-74		GB
H761-M0178	J. DREW	3-5-74		GC
H761-M0179	J. DREW	3-5-74		GD
H761-M0180	J. DREW	3-5-74		GE
H761-M0181	J. DREW	3-5-74		GF
H761-M0182	J. DREW	3-5-74		GG
H761-M0183	J. DREW	3-5-74		GH
H761-M0184	J. DREW	3-5-74		GJ
H761-M0185	J. DREW	3-5-74		GK
H761-M0186	J. DREW	3-5-74		GL
H761-M0187	J. DREW	3-5-74		GM
H761-M0188	J. DREW	3-5-74		GN
H761-M0189	J. DREW	3-5-74		GP
H761-M0190	J. DREW	3-5-74		GR
H761-M0191	J. DREW	3-5-74		GS
H761-M0192	J. DREW	3-5-74		GT
H761-M0193	J. DREW	3-5-74		GU
H761-M0194	J. DREW	3-5-74		GV
H761-M0195	J. DREW	3-5-74		GW
H761-M0196	J. DREW	3-5-74		GX
H761-M0197	J. DREW	3-5-74		GY
H761-M0198	J. DREW	3-5-74		GZ
H761-M0199	J. DREW	3-5-74		HA
H761-M0200	J. DREW	3-5-74		HB
H761-M0201	J. DREW	3-5-74		HC
H761-M0202	J. DREW	3-5-74		HD
H761-M0203	J. DREW	3-5-74		HE
H761-M0204	J. DREW	3-5-74		HF
H761-M0205	J. DREW	3-5-74		HG
H761-M0206	J. DREW	3-5-74		HH
H761-M0207	J. DREW	3-5-74		HJ
H761-M0208	J. DREW	3-5-74		HK
H761-M0209	J. DREW	3-5-74		HL
H761-M0210	J. DREW	3-5-74		HM
H761-M0211	J. DREW	3-5-74		HN
H761-M0212	J. DREW	3-5-74		HP
H761-M0213	J. DREW	3-5-74		HR
H761-M0214	J. DREW	3-5-74		HS
H761-M0215	J. DREW	3-5-74		HT
H761-M0216	J. DREW	3-5-74		HU
H761-M0217	J. DREW	3-5-74		HV
H761-M0218	J. DREW	3-5-74		HW
H761-M0219	J. DREW	3-5-74		HX
H761-M0220	J. DREW	3-5-74		HY
H761-M0221	J. DREW	3-5-74		HZ
H761-M0222	J. DREW	3-5-74		JA
H761-M0223	J. DREW	3-5-74		JB
H761-M0224	J. DREW	3-5-74		JC
H761-M0225	J. DREW	3-5-74		JD
H761-M0226	J. DREW	3-5-74		JE
H761-M0227	J. DREW	3-5-74		JF
H761-M0228	J. DREW	3-5-74		JG
H761-M0229	J. DREW	3-5-74		JH
H761-M0230	J. DREW	3-5-74		JJ
H761-M0231	J. DREW	3-5-74		JK
H761-M0232	J. DREW	3-5-74		JL
H761-M0233	J. DREW	3-5-74		JM
H761-M0234	J. DREW	3-5-74		JN
H761-M0235	J. DREW	3-5-74		JP
H761-M0236	J. DREW	3-5-74		JR
H761-M0237	J. DREW	3-5-74		JS
H761-M0238	J. DREW	3-5-74		JT
H761-M0239	J. DREW	3-5-74		JU
H761-M0240	J. DREW	3-5-74		JV
H761-M0241	J. DREW	3-5-74		JW
H761-M0242	J. DREW	3-5-74		JX
H761-M0243	J. DREW	3-5-74		JY
H761-M0244	J. DREW	3-5-74		JZ
H761-M0245	J. DREW	3-5-74		KA
H761-M0246	J. DREW	3-5-74		KB
H761-M0247	J. DREW	3-5-74		KC
H761-M0248	J. DREW	3-5-74		KD
H761-M0249	J. DREW	3-5-74		KE
H761-M0250	J. DREW	3-5-74		KF
H761-M0251	J. DREW	3-5-74		KG
H761-M0252	J. DREW	3-5-74		KH
H761-M0253	J. DREW	3-5-74		KJ
H761-M0254	J. DREW	3-5-74		KK
H761-M0255	J. DREW	3-5-74		KL
H761-M0256	J. DREW	3-5-74		KM
H761-M0257	J. DREW	3-5-74		KN
H761-M0258	J. DREW	3-5-74		KP
H761-M0259	J. DREW	3-5-74		KR
H761-M0260	J. DREW	3-5-74		KS
H761-M0261	J. DREW	3-5-74		KT
H761-M0262	J. DREW	3-5-74		KU
H761-M0263	J. DREW	3-5-74		KV
H761-M0264	J. DREW	3-5-74		KW
H761-M0265	J. DREW	3-5-74		KX
H761-M0266	J. DREW	3-5-74		KY
H761-M0267	J. DREW	3-5-74		KZ
H761-M0268	J. DREW	3-5-74		LA
H761-M0269	J. DREW	3-5-74		LB
H761-M0270	J. DREW	3-5-74		LC
H761-M0271	J. DREW	3-5-74		LD
H761-M0272	J. DREW	3-5-74		LE
H761-M0273	J. DREW	3-5-74		LF
H761-M0274	J. DREW	3-5-74		LG
H761-M0275	J. DREW	3-5-74		LH
H761-M0276	J. DREW	3-5-74		LJ
H761-M0277	J. DREW	3-5-74		LK
H761-M0278	J. DREW	3-5-74		LL
H761-M0279	J. DREW	3-5-74		LM
H761-M0280	J. DREW	3-5-74		LN
H761-M0281	J. DREW	3-5-74		LP
H761-M0282	J. DREW	3-5-74		LR
H761-M0283	J. DREW	3-5-74		LS
H761-M0284	J. DREW	3-5-74		LT
H761-M0285	J. DREW	3-5-74		LU
H761-M0286	J. DREW	3-5-74		LV
H761-M0287	J. DREW	3-5-74		LW
H761-M0288	J. DREW	3-5-74		LX
H761-M0289	J. DREW	3-5-74		LY
H761-M0290	J. DREW	3-5-74		LZ
H761-M0291	J. DREW	3-5-74		MA
H761-M0292	J. DREW	3-5-74		MB
H761-M0293	J. DREW	3-5-74		MC
H761-M0294	J. DREW	3-5-74		MD
H761-M0295	J. DREW	3-5-74		ME
H761-M0296	J. DREW	3-5-74		MF
H761-M0297	J. DREW	3-5-74		MG
H761-M0298	J. DREW	3-5-74		MH
H761-M0299	J. DREW	3-5-74		MJ
H761-M0300	J. DREW	3-5-74		MK
H761-M0301	J. DREW	3-5-74		ML
H761-M0302	J. DREW	3-5-74		MM
H761-M0303	J. DREW	3-5-74		MN
H761-M0304	J. DREW	3-5-74		MP
H761-M0305	J. DREW	3-5-74		MR
H761-M0306	J. DREW	3-5-74		MS
H761-M0307	J. DREW	3-5-74		MT
H761-M0308	J. DREW	3-5-74		MU
H761-M0309	J. DREW	3-5-74		MV
H761-M0310	J. DREW	3-5-74		MW
H761-M0311	J. DREW	3-5-74		MX
H761-M0312	J. DREW	3-5-74		MY
H761-M0313	J. DREW	3-5-74		MZ
H761-M0314	J. DREW	3-5-74		NA
H761-M0315	J. DREW	3-5-74		NB
H761-M0316	J. DREW	3-5-74		NC
H761-M0317	J. DREW	3-5-74		ND
H761-M0318	J. DREW	3-5-74		NE
H761-M0319	J. DREW	3-5-74		NF
H761-M0320	J. DREW	3-5-74		NG
H761-M0321	J. DREW	3-5-74		NH
H761-M0322	J. DREW	3-5-74		NJ
H761-M0323	J. DREW	3-5-74		NK
H761-M0324	J. DREW	3-5-74		NL
H761-M0325	J. DREW	3-5-74		NM
H761-M0326	J. DREW	3-5-74		NN
H761-M0327	J. DREW	3-5-74		NP
H761-M0328	J. DREW	3-5-74		NR
H761-M0329	J. DREW	3-5-74		NS
H761-M0330	J. DREW	3-5-74		NT
H761-M0331	J. DREW	3-5-74		NU
H761-M0332	J. DREW	3-5-74		NV
H761-M0333	J. DREW	3-5-74		NW
H761-M0334	J. DREW	3-5-74		NX
H761-M0335	J. DREW	3-5-74		NY
H761-M0336	J. DREW	3-5-74		NZ
H761-M0337	J. DREW	3-5-74		PA
H761-M0338	J. DREW	3-5-74		PB
H761-M0339	J. DREW	3-5-74		PC
H761-M0340	J. DREW	3-5-74		PD
H761-M0341	J. DREW	3-5-74		PE
H761-M0342	J. DREW	3-5-74		PF
H761-M0343	J. DREW	3-5-74		PG
H761-M0344	J. DREW	3-5-74		PH
H761-M0345	J. DREW	3-5-74		PJ
H761-M0346	J. DREW	3-5-74		PK
H761-M0347	J. DREW	3-5-74		PL
H761-M0348	J. DREW	3-5-74		PM
H761-M0349	J. DREW	3-5-74		PN
H761-M0350	J. DREW	3-5-74		PP
H761-M0351	J. DREW	3-5-74		PR
H761-M0352	J. DREW	3-5-74		PS
H761-M0353	J. DREW	3-5-74		PT
H761-M0354	J. DREW	3-5-74		PU
H761-M0355	J. DREW	3-5-74		PV
H761-M0356	J. DREW	3-5-74		PW
H761-M0357	J. DREW	3-5-74		PX
H761-M0358	J. DREW	3-5-74		PY
H761-M0359	J. DREW	3-5-74		PZ
H761-M0360	J. DREW	3-5-74		QA
H761-M0361	J. DREW	3-5-74		QB
H761-M0362	J. DREW	3-5-74		QC
H761-M0363	J. DREW	3-5-74		QD
H761-M0364	J. DREW	3-5-74		QE
H761-M0365	J. DREW	3-5-74		QF
H761-M0366	J. DREW	3-5-74		QG
H761-M0367	J. DREW	3-5-74		QH
H761-M0368	J. DREW	3-5-74		QJ
H761-M0369	J. DREW	3-5-74		QK
H761-M0370	J. DREW	3-5-74		QL
H761-M0371	J. DREW	3-5-74		QM
H761-M0372	J. DREW	3-5-74		QN
H761-M0373	J. DREW	3-5-74		QP
H761-M0374	J. DREW	3-5-74		QR
H761-M0375	J. DREW	3-5-74		QS
H761-M0376	J. DREW	3-5-74		QT
H761-M0377	J. DREW	3-5-74		QU
H761-M0378	J. DREW	3-5-74		QV
H761-M0379	J. DREW	3-5-74		QW
H761-M0380	J. DREW	3-5-74		QX
H761-M0381	J. DREW	3-5-74		QY
H761-M0382	J. DREW	3-5-74		QZ
H761-M0383	J. DREW	3-5-74		RA
H761-M0384	J. DREW	3-5-74		RB
H761-M0385	J. DREW	3-5-74		RC
H761-M0386	J. DREW	3-5-74		RD
H761-M0387	J. DREW	3-5-74		RE
H761-M0388	J. DREW	3-5-74		RF
H761-M0389	J. DREW	3-5-74		RG
H761-M0390	J. DREW	3-5-74		RH
H761-M0391	J. DREW	3-5-74		RJ
H761-M0392	J. DREW	3-5-74		RK
H761-M0393	J. DREW	3-5-74		RL
H761-M0394	J. DREW	3-5-74		RM
H761-M0395	J. DREW	3-5-74		RN
H761-M0396	J. DREW	3-5-74		RP
H761-M0397	J. DREW	3-5-74		RR
H761-M0398	J. DREW	3-5-74		RS
H761-M0399	J. DREW	3-5-74		RT
H761-M0400	J. DREW	3-5-74		RU
H761-M0401	J. DREW	3-5-74		RV
H761-M0402	J. DREW	3-5-74		RW
H761-M0403	J. DREW	3-5-74		RX
H761-M0404	J. DREW	3-5-74		RY
H761-M0405	J. DREW	3-5-74		RZ
H761-M0406	J. DREW	3-5-74		SA
H761-M0407	J. DREW	3-5-74		SB
H761-M0408	J. DREW	3-5-74		SC
H761-M0409	J. DREW	3-5-74		SD
H761-M0410	J. DREW	3-5-74		SE
H761-M0411	J. DREW	3-5-74		SF
H761-M0412	J. DREW	3-5-74		SG
H761-M0413	J. DREW	3-5-74		SH
H761-M0414	J. DREW	3-5-74		SJ
H761-M0415	J. DREW	3-5-74		SK
H761-M0416	J. DREW	3-5-74		SL
H761-M0417	J. DREW	3-5-74		SM
H761-M0418	J. DREW	3-5-74		SN
H761-M0419	J. DREW	3-5-74		SP
H761-M0420	J. DREW	3-5-74		SR
H761-M0421	J. DREW	3-5-74		SS
H761-M0422	J. DREW	3-5-74		ST
H761-M0423	J. DREW	3-5-74		SU
H761-M0424	J. DREW	3-5-74		SV
H761-M0425	J. DREW	3-5-74		SW
H761-M0426	J. DREW	3-5-74		SX
H761-M0427	J. DREW	3-5-74		SY
H761-M0428	J. DREW	3-5-74		SZ
H761-M0429	J. DREW	3-5-74		TA
H761-M0430	J. DREW	3-5-74		TB
H761-M0431	J. DREW	3-5-74		TC
H761-M0432	J. DREW	3-5-74		TD
H761-M0433	J. DREW	3-5-74		TE
H761-M0434	J. DREW	3-5-74		TF
H761-M0435	J. DREW	3-5-74		TG
H761-M0436	J. DREW	3-5-74		TH
H761-M0437	J. DREW	3-5-74		TJ
H761-M0438	J. DREW	3-5-74		TK
H761-M0439	J. DREW	3-5-74		TL
H761-M0440	J. DREW	3-5-74		TM
H761-M0441	J. DREW	3-5-74		TN
H761-M0442	J. DREW	3-5-74		TP
H761-M0443	J. DREW	3-5-74		TR
H761-M0444	J. DREW	3-5-74		TS
H761-M0445	J. DREW	3-5-74		TT
H761-M0446	J. DREW	3-5-74		TU
H761-M0447	J. DREW	3-5-74		TV
H761-M0448	J. DREW	3-5-74		TW
H761-M0449	J. DREW	3-5-74		TX
H761-M0450	J. DREW	3-5-74		TY
H761-M0451	J. DREW	3-5-74		TZ
H761-M0452	J. DREW	3-5-74		UA
H761-M0453	J. DREW	3-5-74		UB
H761-M0454	J. DREW	3-5-74		UC
H761-M0455	J. DREW	3-5-74		UD
H761-M0456	J. DREW	3-5-74		UE
H761-M0457	J. DREW	3-5-74		UF
H761-M0458	J. DREW	3-5-74		UG
H761-M0459	J. DREW	3-5-74		UH
H761-M0460	J. DREW	3-5-74		UJ
H761-M0461	J. DREW	3-5-74		UK
H761-M0462	J. DREW	3-5-74		UL
H761-M0463	J. DREW	3-5-74		UM
H761-M0464	J. DREW	3-5-74		UN
H761-M0465	J. DREW	3-5-74		UP
H761-M0466	J. DREW	3-5-74		UR
H761-M0467	J. DREW	3-5-74		US
H761-M0468	J. DREW	3-5-74		UT
H761-M0469	J. DREW	3-5-74		UU
H761-M0470	J. DREW	3-5-74		UV
H761-M0471	J. DREW	3-5-74		UW
H761-M0472	J. DREW	3-5-74		UX
H761-M0473	J. DREW	3-5-74		UY
H761-M0474	J. DREW	3-5-74		UZ
H761-M0475	J. DREW	3-5-74		VA
H761-M0476	J. DREW	3-5-74		VB
H761-M0477	J. DREW	3-5-74		VC
H761-M0478	J. DREW	3-5-74		VD
H761-M0479	J. DREW	3-5-74		VE
H761-M0480	J. DREW	3-5-74		VF
H761-M0481	J. DREW	3-5-74		VG
H761-M0482	J. DREW	3-5-74		VH
H761-M0483	J. DREW	3-5-74		VJ
H761-M0484	J. DREW	3-5-74		VK
H761-M0485	J. DREW	3-5-74		VL
H761-M0486	J. DREW	3-5-74		VM
H761-M0487	J. DREW	3-5-74		VN
H761-M0488	J. DREW	3-5-74		VP
H761-M0489	J. DREW	3-5-74		VR
H761-M0490	J. DREW	3-5-74		VS
H761-M0491	J. DREW	3-5-74		VT
H761-M0492	J. DREW	3-5-74		VU
H761-M0493	J. DREW	3-5-74		VV
H761-M0494	J. DREW	3-5-74		VW
H761-M0495	J. DREW	3-5-74		VX
H761-M0496	J. DREW	3-5-74		VY
H761-M0497	J. DREW	3-5-74		VZ
H761-M0498	J. DREW	3-5-74		WA
H761-M0499	J. DREW	3-5-74		WB
H761-M0500	J. DREW	3-5-74		WC
H761-M0501	J. DREW	3-5-74		WD
H761-M0502	J. DREW	3-5-74		WE
H761-M0503	J. DREW	3-5-74		WF
H761-M0504	J. DREW	3-5-74		WG
H761-M0505	J. DREW	3-5-74		WH
H761-M0506	J. DREW	3-5-74		WJ
H761-M0507	J. DREW	3-5-74		WK
H761-M0508	J. DREW	3-5-74		WL
H761-M0509	J. DREW	3-5-74		WM
H761-M0510	J. DREW	3-5-74		WN
H761-M0511	J. DREW	3-5-74		WP
H761-M0512	J. DREW	3-5-74		WR
H761-M0513	J. DREW	3-5-74		WS
H761-M0514	J. DREW	3-5-74		WT
H761-M0515	J. DREW	3-5-74		WU
H761-M0516	J. DREW	3-5-74		WV
H761-M0517	J. DREW	3-5-74		WW
H761-M0518	J. DREW	3-5-74		WX
H761-M0519	J. DREW	3-5-74		WY
H761-M0520	J. DREW	3-5-74		WZ
H761-M0521	J. DREW	3-5-74		XA
H761-M0522	J. DREW	3-5-74		XB
H761-M0523	J. DREW	3-5-74		XC
H761-M0524	J. DREW	3-5-74		XD
H761-M0525	J. DREW	3-5-74		XE
H761-M0526	J. DREW	3-5-74		XF
H761-M0527	J. DREW	3-5-74		XG
H761-M0528	J. DREW	3-5-74

PART NO. THE NAME, PDP-8, MANUFACTURE OR SALE OF ITEMS WITHOUT WRITTEN PERMISSION, COPYRIGHT © 1971, DIGITAL EQUIPMENT CORPORATION

ITEM NO.	DESCRIPTION AWG	COLOR	POINT	FROM CONNECTION	TERM	POINT	TO CONNECTION	TERM	REMARKS
45	8	BLU	—	CB1-2	48	—	HSA3-P81	47	
			—	CB2-2		—	HSA3-P82		
			—	CB3-2		—	HSA3-P83		
			—	CB4-2		—	HSA3-P84		
			—	CB5-2		—	HSA4-P81		
			—	CB6-2		—	HSA4-P82		
			—	CB7-2		—	HSA4-P83		
			—	CB8-2	46	—	HSA4-P84		
			—	CB9-2	47	—	HSA3-P81		
45		BLU	—	CB10-2		—	HSA3-P82		
44		GRN	—	CB11-2		—	HSA1-P81		
43			—	CB12-2		—	HSA1-P82		
34			—	CB13-2		—	HSA2-P81		
44	8	GRN	—	CB14-2	47	—	HSA2-P82	47	
45	8	BLU	—	HSA3-CB81	47	—	TB2-11	47	
			—	HSA3-CB82		—	TB2-13		
			—	HSA3-CB83		—	TB2-15		
			—	HSA3-CB84		—	TB2-17		
			—	HSA4-CB81		—	TB3-11		
			—	HSA4-CB82		—	TB3-13		
			—	HSA4-CB83		—	TB3-15		
			—	HSA4-CB84		—	TB3-17		
			—	HSA5-CB81		—	TB1-13		
45		BLU	—	HSA5-CB82		—	TB1-11		
44		GRN	—	HSA1-CB81		—	TB4-11		
43			—	HSA1-CB82		—	TB4-13		
44			—	HSA2-CB81		—	TB4-15		
43	8	GRN	—	HSA2-CB82	47	—	TB4-17	47	
42	14	BLK	—	RTN4-1	51	—	RTN3-1	51	
42	14	BLK	—	RTN3-1		—	RTN2-1		
42	14	BLK	—	RTN2-1		—	RTN1-1		
42	14	BLK	—	RTN1-5	51	—	GND-1	51	

ITEM NO.	DESCRIPTION AWG	COLOR	POINT	FROM CONNECTION	TERM	POINT	TO CONNECTION	TERM	REMARKS
39	18	GRN	—	J4-2	SOLD	—	A9A1	37 & 38	
39		BARE	—			—	J4-1	SOLD	
41		GRN	—	J5-2		—	A8T2	37 & 38	
41		BARE	—			—	J5-1	SOLD	
40		BLK	—	J8-4		—	A8C2	37 & 38	
		BARE	—			—	J8-3	SOLD	
		BARE	—	J8-2		—	J8-1		
40		BARE	—			—			
52			—	CB11-5		—	CB12-5		
			—	CB13-5		—	CB14-5		
52			—	CB10-5		—	CB9-5		
52/53			—	CB8-5		—	CB7-5		
52			—	CB6-5		—	CB5-5		
			—	CB4-5		—	CB3-5		
52	18		—	CB2-5	SOLD	—	CB1-5		
52	18		—	CB2-3	SOLD	—	CB1-3		
			—	CB4-3		—	CB3-3		
			—	CB6-3		—	CB5-3		
52			—	CB8-3		—	CB7-3		
52/53			—			—			
52	18		—	CB10-3	SOLD	—	CB9-3	SOLD	

CONTINUED ON SHEET 3

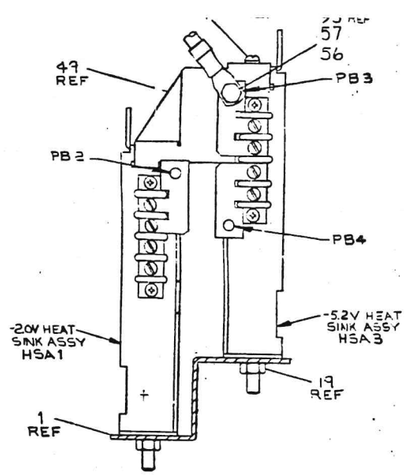

SECTION C-C
SCALE: 1/1

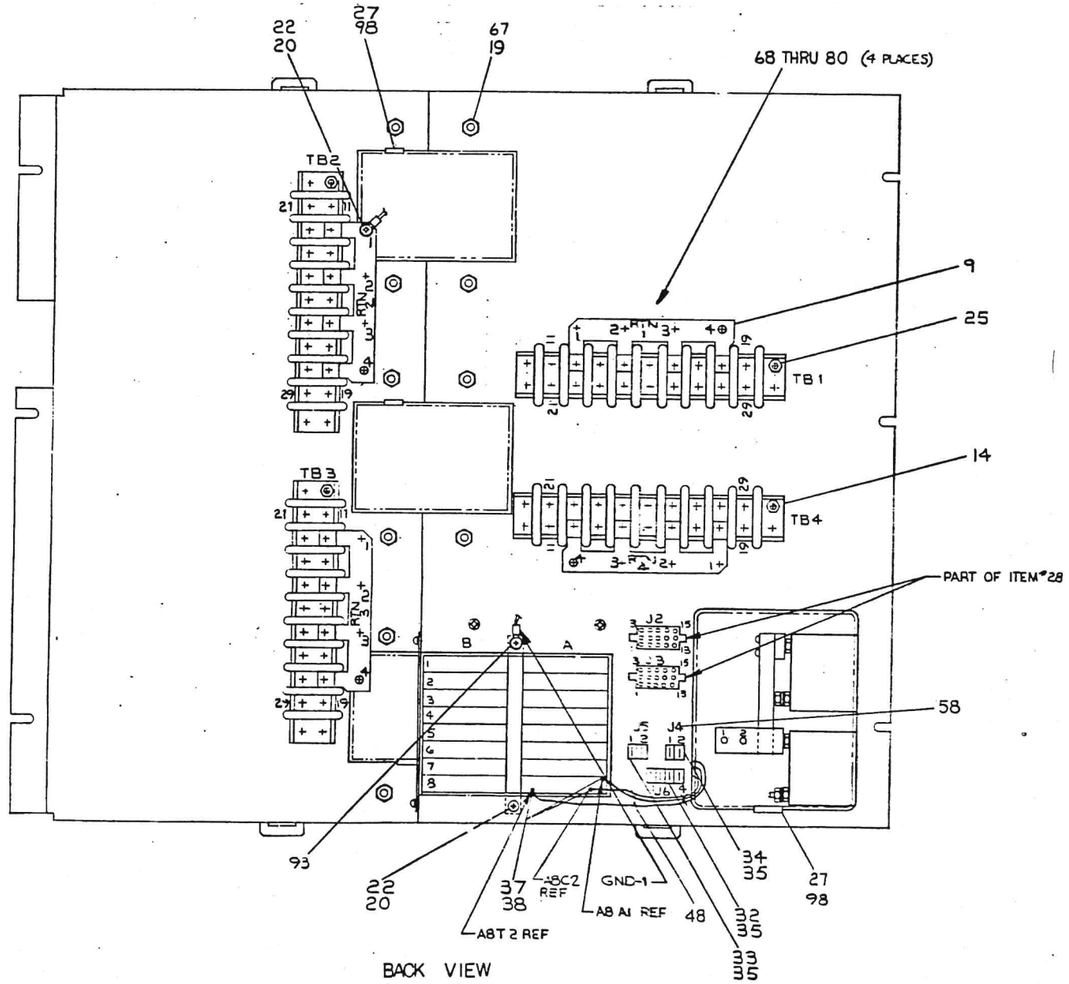

BACK VIEW
SCALE: NONE

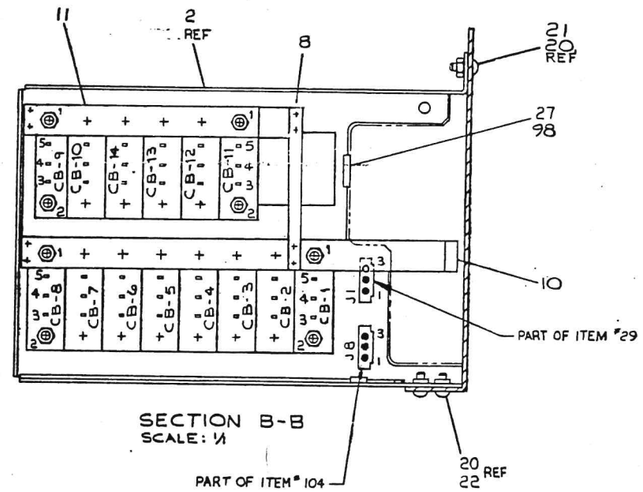

SECTION B-B
SCALE: 1/1

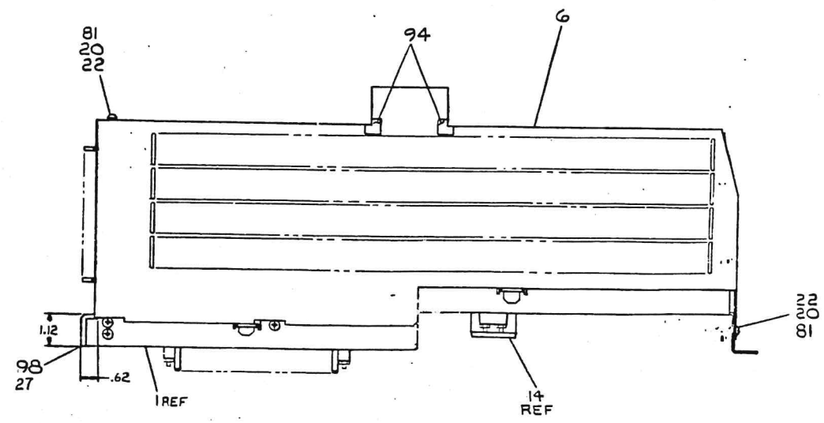

VIEW A-A
SCALE: 1/2
H761-0 ONLY

REVISIONS		
CHK	CHANGE NO.	REV.

TITLE	SIZE	CODE	NUMBER	REV.
REGULATED POWER SUPPLY	E	UA	H761-0-0	K
SCALE 1/1	SHEET	OF	DIST.	

PART OR THE SALE OR THE REPRODUCTION OR USE OF ITEMS WITHOUT WRITTEN PERMISSION COPYRIGHT © 1-7-74 , DIGITAL EQUIPMENT CORPORATION"

ITEM NO.	DESCRIPTION AWG.	FROM COLOR	POINT	CONNECTION	TERM	POINT	TO CONNECTION	TERM	REMARKS
52	18	—	—	CB10-3	SOLD	—	CB14-3	SOLD	
52	↓	—	—	CB13-3	↓	—	↓	↓	
52	↓	—	—	↓	↓	—	CB12-3	↓	
52	18	—	—	CB11-3	SOLD	—	↓	SOLD	
30	18 TYP	BLU	29	HARNESS	—	—	TB3-11	—	
▲		BLK	30	▲	—	—	RTN3-1	—	
	18 TYP	BLK	31		—	—	RTN3-1	—	
		BLU	32		—	—	TB3-13	—	
	18 TYP	BLK	33		—	—	RTN3-2	—	
		BLU	34		—	—	TB3-15	—	
	18 TYP	BLK	35		—	—	RTN3-3	—	
		BLU	36		—	—	TB3-17	—	
	18 TYP	GRN	37		—	—	TB4-17	—	
		BLK	38		—	—	RTN4-1	—	
	18 TYP	GRN	39		—	—	TB4-15	—	
		BLK	40		—	—	RTN4-2	—	
	18 TYP	BLK	41		—	—	RTN4-3	—	
		GRN	42		—	—	TB4-13	—	
	18 TYP	BLK	43		—	—	RTN4-3	—	
		GRN	44		—	—	TB4-11	—	
	18 TYP	BLK	45		—	—	RTN1-1	—	
		BLU	46		—	—	TB1-11	—	
	18 TYP	BLU	47		—	—	TB1-13	—	
		BLK	48		—	—	RTN1-2	—	
	18 TYP	BLU	49		—	—	TB2-15	—	
		BLK	50		—	—	RTN2-3	—	
	18 TYP	BLU	51		—	—	TB2-17	—	
		BLK	52		—	—	RTN2-3	—	
	18 TYP	BLK	53		—	—	RTN2-2	—	
		BLU	54		—	—	TB2-13	—	
	18 TYP	BLK	55		—	—	RTN2-1	—	
▼		BLU	58	▼	—	—	TB2-11	—	
30	—	—	—	HARNESS	P2	—	(803) ITEM #7	—	

ITEM NO	DESCRIPTION AWG	FROM COLOR	POINT	CONNECTION	TERM	POINT	TO CONNECTION	TERM	REMARKS
28	—	—	—	HARNESS	J2	—	CHASSIS ITEM #1	—	
28	—	—	—	↑	J3	—	CHASSIS ITEM #1	—	
28	—	—	—		P1	—	(804) ITEM #7	—	
29	—	—	—		J1	—	ITEM #2	—	
29	—	RED	3		—	—	HSA2 - FAN-2	—	
29	—	WHITE	4		—	—	HSA2 - FAN-1	—	
29	—	RED	5		—	—	HSA1 - FAN-2	—	
29	—	WHITE	6		—	—	HSA1 - FAN-1	—	
29	—	RED	7		—	—	HSA3 - FAN-2	—	
31	—	—	—		P3	—	(805) ITEM #7	—	
▲	—	—	—		P18	—	HSA4-J18	—	
	—	—	—		P8	—	HSA4-J8	—	
	—	—	—		P6	—	HSA3-J6	—	
	—	—	—		P7	—	HSA3-J7	—	
	—	—	—		P13	—	HSA1-J13	—	
	—	—	—		P14	—	HSA1-J14	—	
	—	—	—		P12	—	HSA5-J12	—	
	—	—	—		P11	—	HSA5-J11	—	
	—	—	—		P15	—	HSA2-J15	—	
	—	—	—		P16	—	HSA2-J16	—	
	14	BLK	31		—	—	RTN2-3	—	
	↓	↓	32		—	—	↓	—	
	↓	↓	33		—	—	RTN2-2	—	
	↓	↓	34		—	—	RTN2-1	—	
	↓	↓	35		—	—	RTN1-1	—	
	↓	↓	36		—	—	RTN1-2	—	
	↓	↓	37		—	—	RTN4-2	—	
	↓	↓	38		—	—	↓	—	
▼	↓	↓	39		—	—	RTN4-1	—	
31	14	BLK	40		—	—	↓	—	
29	—	WHITE	8		—	—	HSA3 - FAN-1	—	
↓	—	RED	9		—	—	HSA5 - FAN-2	—	
↓	—	WHITE	10		—	—	HSA5 - FAN-1	—	
↓	—	RED	11	↓	—	—	HSA4 - FAN-2	—	
29	—	WHITE	12	HARNESS	—	—	HSA4 - FAN-1	—	

CONTINUED ON SHEET 4

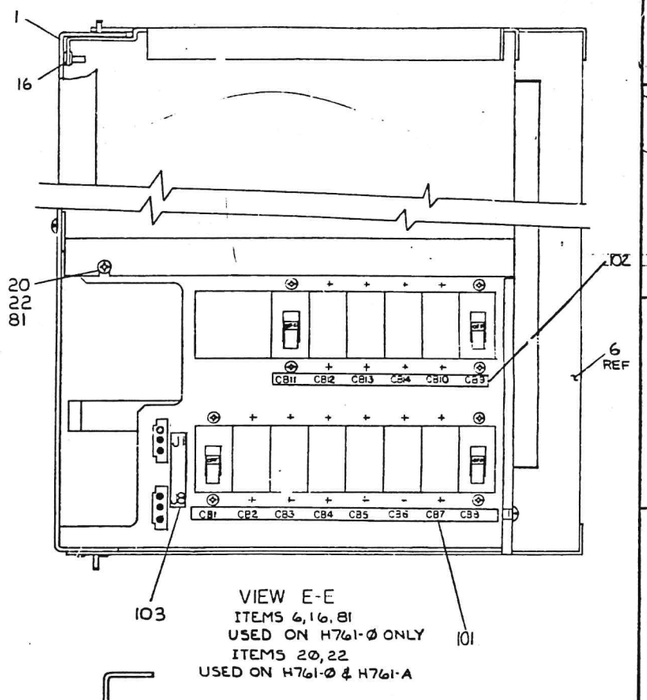

VIEW E-E
ITEMS 6, 16, 81
USED ON H761-0-0 ONLY
ITEMS 20, 22
USED ON H761-0 & H761-A

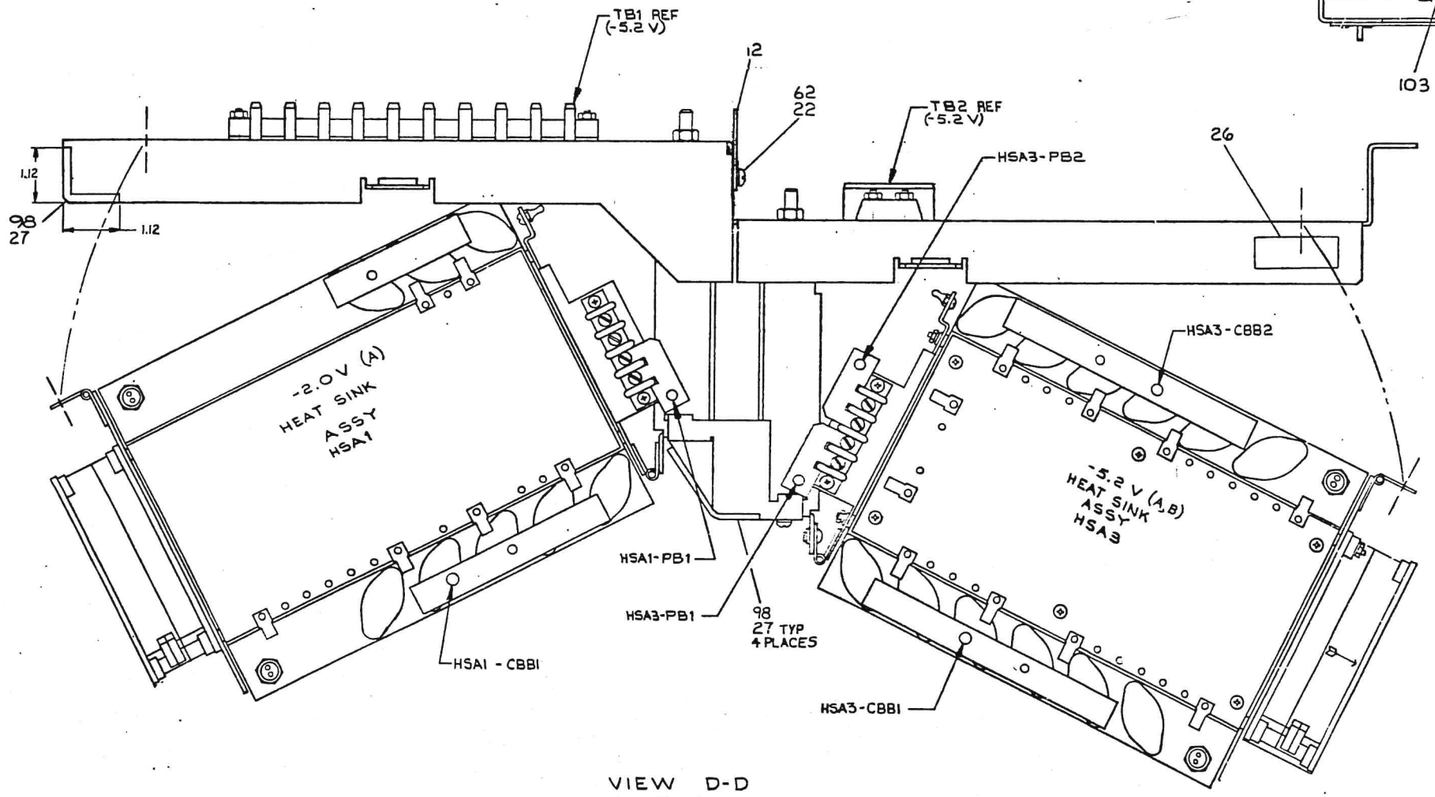

VIEW D-D
SCALE: 1/1

REVISIONS		
CHK	CHANGE NO.	REV.

TITLE REGULATED POWER SUPPLY	SIZE E	CODE U4	NUMBER H761-0-0	REV. K
SCALE 1/1	SHEET 3 OF 4	DIST.		

H761-0-0 K

SHALL NOT BE REPRODUCED OR COPIED OR USED IN WHOLE OR PART AS THE BASIS OF THE MANUFACTURE OR SALE OF ITEMS WITHOUT WRITTEN PERMISSION.
COPYRIGHT © 19-- DIGITAL EQUIPMENT CORPORATION

ITEM NO.	DESCRIPTION AWG.	COLOR	FROM POINT	FROM CONNECTION	FROM WITH	TO POINT	TO CONNECTION	TO WITH	REMARKS
104	18	WHT	1	HARNESS	SOLD	—	CBI-5	—	TWP
	TWP	RED	2		SOLD	—	CBI-3	—	
		RED	3						TWP
		BLK	4		J1-3	—	CHASSIS ITEM #1	—	TWP
		WHT	5		J1-2	—		—	
		YEL	6		J1-1	—		—	
		YEL	7		—	—	SW4-1	—	
		YEL	8		—	—		—	TWP
		BLK	9		—	—	SW4-2	—	TWP
		BLK	10		—	—		—	
		YEL	11		—	—	SW3-1	—	
		YEL	12		—	—		—	TWP
		BLK	13		—	—	SW3-2	—	TWP
		BLK	14		—	—		—	
		BLK	15		—	—	SW2-2	—	TWP
		YEL	16		—	—	SW2-1	—	
		YEL	17		—	—	SW1-1	—	
		YEL	18		—	—		—	TWP TWP
		BLK	19		—	—	SW1-2	—	
		BLK	20		—	—		—	
		YEL	21		—	—	SW5-1	—	
		YEL	22		—	—		—	TWP TWP
		BLK	23		—	—	SW5-2	—	
		BLK	24		—	—		—	
		YEL	25		—	—	SW6-1	—	
		YEL	26		—	—		—	TWP TWP
		BLK	27		—	—	SW6-2	—	
		BLK	28		—	—		—	
		YEL	29		—	—	SW7-1	—	
		YEL	30		—	—		—	TWP TWP
		BLK	31		—	—	SW7-2	—	
		BLK	32		—	—		—	
		YEL	33		—	—	SW8-1	—	
		YEL	34		—	—		—	TWP TWP
		BLK	35		—	—	SW8-2	—	
		BLK	36		—	—		—	
		YEL	37		—	—	SW9-1	—	
		YEL	38		—	—		—	TWP TWP
		BLK	39		—	—	SW9-2	—	
		BLK	40		—	—		—	
		YEL	41		—	—	SW10-1	—	
		YEL	42		—	—		—	TWP TWP
	18	BLK	43		—	—	SW10-2	—	
104	TWP	BLK	44	HARNESS	—	—		—	

REVISIONS		
CHK	CHANGE NO.	REV.

TITLE	SIZE	CODE	NUMBER	REV.
REGULATED POWER SUPPY	E	UA	H761-Ø-Ø	K
SCALE —	SHEET 1 OF 1			

MR

AUTOMATED BY PRTLST.5R(52)

SHEET A1 OF A3

P A R T S L I S T

LINE	ITEM	TOP DOCUMENT	PART NUMBER	MIN REV	DESCRIPTION	QTY PER VARIATION 00 K	00 A
					VARIATION REVISION LEVEL:	K	A
1	1	E-IA-7410991-0-0	7410991-00		CHASSIS REGULATED P.S. (KL10)	1	1
2	2	E-IA-7410993-0-0	7410993-00		CIRCUIT BREAK MTG PLATE (KL10)	1	1
3	3	E-AD-7009405-0-0	7009405-00		*** THIS ITEM IS NOT USED ***	-	-
4	4	E-AD-7009404-0-0	7009404-00		*** THIS ITEM IS NOT USED ***	-	-
5	5	D-IA-7411571-0-0	7411571-01		SUPPORT REG ASSY-KL10	2	2
6	6	E-IA-7010162-0-0	7010162-00		COVER ASSY (H761) KL10	1	-
7	7	C-AD-7010100-0-0	7010100-00		LOGIC H761	1	1
8	8	B-MD-7411529-0-0	7411529-00	A	BAR CONN BUSS-KL10	1	1
9	9	C-IA-7411554-0-0	7411554-01		STRIP BUSS RETURN H761 (KL10)	4	4
10	10	C-MD-7411531-0-0	7411531-00		BAR NO 1 -12V BUSS	1	1
11	11	C-MD-7411532-0-0	7411532-00		BAR NO 2 -12V BUSS-KL10	1	1
12	12	B-MD-7412425-0-0	7412425-00	A	CONN PROT PLATE PIN KL10 (H761)	1	1
13	13		1211498-00	A	CKT BKR 35.0 A 50V 1P	14	14
14	14		1211499-00	A	TERM BLOCK 09POS(2X05).687CC	4	4
15	15		9007046-00	A	*** THIS ITEM IS NOT USED ***	-	-
16	16		9007014-00	A	GROMMET,ROUND RUBBER	1	-
17	17		9006020-01	A	SCREW,MACH PAN PHIL 6-	28	28
18	18		9006633-00	A	WASHER,LOCK INTERNAL STEEL	40	40
19	19		9008203-00	A	NUT,HEX EXT TOOTH LCKWSHR 1/4-20	20	20
20	20		9006037-01	A	SCREW,MACH PAN PHIL 8-	26	20
21	21		9006563-00	A	NUT,HEX EXT TOOTH LCKWSHR 8-32	1	1
22	22		9006634-00	A	WASHER,LOCK INTERNAL STEEL	27	21
23	23		9006025-01	A	SCREW,MACH PAN PHIL 6-	4	4
24	24		9006036-02	A	SCREW,MACH FLAT PHIL 8-	2	2
25	25		9006560-00	A	NUT,HEX EXT TOOTH LCKWSHR 6-32	16	16
26	26		9009255-00	B	LABEL, POWER SUPPLY, 2-15/16 " L	1	1
27	27		9007594-00	A	ADHESIVE,NEOPRENE	1	1
28	28	D-IA-7009546-0-0	7009546-00		CABLE (H761)	1	1
29	29	E-IA-7010307-0-0	7010307-00		HARNESS A/C FAN (H761)	1	1
30	30	E-IA-7009547-0-0	7009547-00		CABLE (H761)	1	1

REVISION HISTORY			BASIC PART NO: H761			
ENG	ECO NUMBER	REV	SECTION A OF A			
	INITIAL	K	SECTION.VARIATION INDEX [A]00,A	DRN: K. GAMACHE	DATE:	DIGITAL
			[B]	CHK'D: D. SIREEN	DATE: 1 NOV 74	TITLE PARTS LIST REGULATED POWER SUPPLY
			[C]	DES.ENG: J. DREW	DATE: 19 NOV 74	DOCUMENT NUMBER
			[D]	RESP.ENG.: J. DREW	DATE: 19 NOV 74	SIZE K / CODE PL / NUMBER H761-0-DBP / REV K
			[E]	MFG.ENG.: R. O'BRIAN	DATE: 19 NOV 74	RELEASE DATE:
			[F]	ASSEMBLY NUMBER: E-UA-H761-0-0	TOP DOCUMENT NUMBER: E-UA-H761-0-0	FILE NAME: Z7456K.PLS / EDIT #: 5

"THIS DRAWING AND THE SPECIFICATIONS CONTAINED HEREIN ARE CONFIDENTIAL AND PROPRIETARY. THEY ARE THE PROPERTY OF DIGITAL EQUIPMENT CORPORATION AND SHALL NOT BE REPRODUCED OR COPIED OR USED IN WHOLE OR IN PART AS THE BASIS FOR THE MANUFACTURE OR SALE OF ITEMS WITHOUT WRITTEN PERMISSION. THIS IS AN UNPUBLISHED WORK PROTECTED UNDER THE FEDERAL COPYRIGHT LAWS."

MR

K

AUTOMATED BY PRTLST.5R(52)

MR

SHEET A2 OF A3

PARTS LIST

LINE	ITEM	TOP DOCUMENT	PART NUMBER	MIN REV	DESCRIPTION	QTY PER VARIATION 00	A
					VARIATION REVISION LEVEL:	K	A
31	31	E-IA-7009545-0-0	7009545-00		CABLE (H761)		
32	32		9007237-00		TERM,TAB,BUSHING	1	1
33	33		9007236-00		TERM,TAB,BUSHING	4	4
34	34		9007234-00		TERM,TAB,BUSHING	2	2
35	35		9007238-00	B	TERM QUICK 2POS SOLDER,MALE	2	2
36	36		9007880-00		TIE,CABLE BUNDL DIA 0-1.14"=101	8	8
37	37		9009139-00		CONN,P+S 01SKT 22-18AWG	21	21
38	38		9107302-11		TUBING,TEFLON .106ID	3	3
39	39		9107360-33	A	WIRE, 18AWG(19/30)IPVC 150V	A/R	A/R
40	40		9107360-00	A	WIRE, 18AWG(19/30)IPVC 150V	A/R	A/R
41	41		9107360-55	A	WIRE, 18AWG(19/30)IPVC 150V	A/R	A/R
42	42		9107370-00	A	WIRE, 14AWG19/.0147IPVC 150V	A/R	A/R
43	43		9107430-29	A	WIRE,TWP 18AWG(19/30)IPVC 150V	A/R	A/R
44	44		9107765-55	A	WIRE, 08AWG(163/30)IPVC 600V1	A/R	A/R
45	45		9107765-66	A	WIRE, 08AWG(168/30)IPVC 600V1	A/R	A/R
46	46		12120d6-01	A	TERM,RING 1/4STUD FLAG	8	8
47	47		1211515-00	D	TERM,RING 1/4STUD CRIMP	40	40
48	48		9007031-00	B	TIE,CABLE BUNDL.DIA 0- 3/4"=101	63	63
49	49	D-IA-7411571-0-0	7411571-02		SUPPORT REG ASSY-KL10	2	2
50	50		9006021-04	A	SCREW,MACH BIND SLOT 5-	8	8
51	51		9007928-00		TERM,RING #10STUD CRIMP 14-1	8	8
52	52		9107560-03	B	WIRE,BUSS 18AWG TIN BARE	A/R	A/R
53	53		9107278-00		TUBING,TEFLON .042ID	0	0
54	54		1209379-00		*** THIS ITEM IS NOT USED ***	-	-
55	55		1209350-03	F	*** THIS ITEM IS NOT USED ***	-	-
56	56		9006240-09	A	SCREW,MACH HEX PLN 1/4-	28	28
57	57		9006724-00	A	WASHER,LOCK EXTERNAL STEEL	28	28
58	58	A-DC-7409873-0-0	7409873-00		CANCELLED 7-28-81 BY FRED CARBER	1	1
59	59		9007033-00		TIE,CABLE BUNDL.DIA 0-1-3/4"=101	5	5
60	60		5308944-03		*** THIS ITEM IS NOT USED ***	-	-
61	61		5308943-01		*** THIS ITEM IS NOT USED ***	-	-
62	62		9006035-01	A	SCREW,MACH PAN PHIL 8-	2	2
63	63		G8010-00		-5.2V CONTROL KL10	3	3
64	64		G8011-00		-2V CONTROL KL10	2	2
65	65	D-CS-G8013-0-0	G8013-00		+10V REFERENCE KL10	1	1
66	66	D-CS-G8014-0-0	G8014-00		-5.2V DETECTOR 16 INPUTS	1	1
67	67		9006676-00	A	WASHER,FLAT SST	20	20
68	68		5308754-03		DECAL	1	1
69	69		5308754-05		DECAL	1	1
70	70		5308754-07		*** THIS ITEM IS NOT USED ***	-	-
71	71		5308754-09		*** THIS ITEM IS NOT USED ***	-	-
72	72		5308754-11		*** THIS ITEM IS NOT USED ***	-	-
73	73		5308754-13		*** THIS ITEM IS NOT USED ***	-	-
74	74		5308754-15		*** THIS ITEM IS NOT USED ***	-	-
75	75		5308754-19		FAB FOR H761	1	1
76	76		5308753-31		DECAL 21 PT LETTERS (H751)	1	1
77	77		5308753-03		DECAL	1	1
78	78		5308753-01		DECAL	1	1

DIGITAL	TITLE	SECTION A OF A	SIZE	CODE	DOCUMENT NUMBER	REV
	REGULATED POWER SUPPLY		K	PL	H761-0-DBP	K

MR

K

MR

AUTOMATED BY PRTLST.5R(52)

PARTS LIST

LINE	ITEM	TOP DOCUMENT	PART NUMBER	MIN REV	DESCRIPTION	QTY PER VARIATION 00	A
					VARIATION REVISION LEVEL:	K	A
79	79		5308753-23		DECAL 21 PT LETTERS (H761)	1	1
80	80		5308753-27		DECAL 1107	1	1
81	81		9006660-00	A	WASHER,FLAT SST	6	-
82	82		5308944-05		*** THIS ITEM IS NOT USED ***	-	-
83	83		5308943-03		*** THIS ITEM IS NOT USED ***	-	-
84	84		5308943-05		*** THIS ITEM IS NOT USED ***	-	-
85	85		5308943-07		*** THIS ITEM IS NOT USED ***	-	-
86	86		5308943-09		*** THIS ITEM IS NOT USED ***	-	-
87	87		5308943-11		*** THIS ITEM IS NOT USED ***	-	-
88	88		5308943-13		*** THIS ITEM IS NOT USED ***	-	-
89	89		5308943-15		*** THIS ITEM IS NOT USED ***	-	-
90	90		5308943-17		*** THIS ITEM IS NOT USED ***	-	-
91	91		5308943-19		*** THIS ITEM IS NOT USED ***	-	-
92	92		9008841-01	A	STANDOFF,MALE/FEMALE HEX 10-32	6	6
93	93		9008151-00	A	WASHER,LOCK EXTERNAL STEEL	1	1
94	94		9008981-00	A	TAPE,FOAM,GRAY 1-3/16W 33"L 1/8T	A/R	-
95	95		9006635-00	A	WASHER,LOCK INTERNAL STEEL	48	48
96	96		9006637-00	A	WASHER,LOCK INTERNAL STEEL	12	12
97	97		9009507-00	A	TAPE,VINYL ADH .75 WDX .00	A/R	A/R
98	98		9007036-00	B	GROMMET,CATERPILLAR POLYAMIDE	A/R	A/R
99	99		9107250-00		*** THIS ITEM IS NOT USED ***	-	-
100	100	A-WL-H761-0-10			H761 SPECIAL GND. WIRES	REF	REF
101	101	A-PS-3613819-0-0	3613819-00	A	DECAL,VINYL, ADH BACK, H761	1	1
102	102	A-PS-3613819-0-0	3613819-01	A	DECAL,VINYL, ADH BACK, H761	1	1
103	103	A-PS-3613819-0-0	3613819-02	A	DECAL,VINYL, ADH BACK, H761	1	1
104	104		7015219-00		HARNESS,H761 THERMOSTAT	1	1
105	105		7018177-00		ASSY,MODULE CLIP	2	2
106	106		1209856-03		HOLDER, MODULE	2	2
107	107	BLANK				0	0
108	108		7009404-01		REGULATED HEAT SINK ASSY. -2.0V	2	2
109	109		7009405-01		REGULATED HEAT SINK ASSY. -5.2V	3	3

########## RELEASABLE ##########

DIGITAL	TITLE	SECTION	SIZE	CODE	DOCUMENT NUMBER	REV
	REGULATED POWER SUPPLY	A OF A	K	PL	H761-0-0BP	K

MRO

K

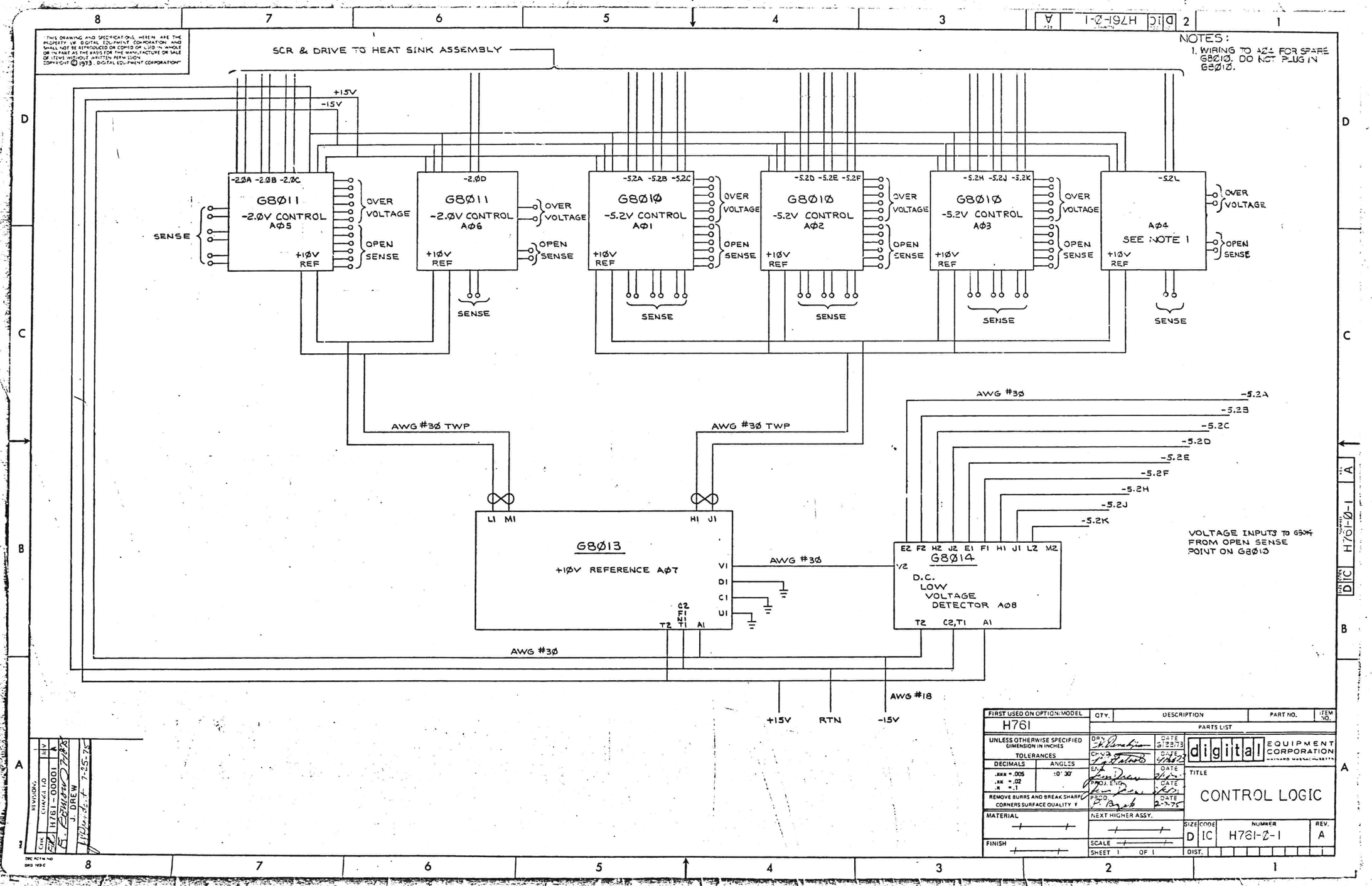

NOTES:
1. WIRING TO A04 FOR SPARE G8010. DO NOT PLUG IN G8010.

THIS DRAWING AND SPECIFICATIONS, HEREIN, ARE THE PROPERTY OF DIGITAL EQUIPMENT CORPORATION AND SHALL NOT BE REPRODUCED OR COPIED OR USED IN WHOLE OR IN PART AS THE BASIS FOR THE MANUFACTURE OR SALE OF ITEMS WITHOUT WRITTEN PERMISSION. COPYRIGHT © 1973, DIGITAL EQUIPMENT CORPORATION

FIRST USED ON OPTION/MODEL	QTY.	DESCRIPTION	PART NO.	ITEM NO.
H761		PARTS LIST		

UNLESS OTHERWISE SPECIFIED DIMENSION IN INCHES
TOLERANCES
DECIMALS .xxx = .005 .xx = .02 .x = .1
ANGLES ±0° 30'
REMOVE BURRS AND BREAK SHARP CORNERS SURFACE QUALITY
MATERIAL
FINISH

DRN. DATE 6/28/73
CHKD. DATE 4/16/73
ENG. DATE
PROJ. ENG. DATE
PROD. DATE 2-7-75
NEXT HIGHER ASSY.
SCALE
SHEET 1 OF 1

digital EQUIPMENT CORPORATION
MAYNARD MASSACHUSETTS

TITLE
CONTROL LOGIC

SIZE	CODE	NUMBER	REV.
D	IC	H761-0-1	A

DIST.

REVISIONS
CHK. H761-00001 A
E. Bowen 7/18/75
J. DREW 7-25-75

"THIS DRAWING AND SPECIFICATIONS, HEREIN, ARE THE PROPERTY OF DIGITAL EQUIPMENT CORPORATION AND SHALL NOT BE REPRODUCED OR COPIED OR USED IN WHOLE OR IN PART AS THE BASIS FOR THE MANUFACTURE OR SALE OF ITEMS WITHOUT WRITTEN PERMISSION.
COPYRIGHT ©1973 DIGITAL EQUIPMENT CORPORATION"

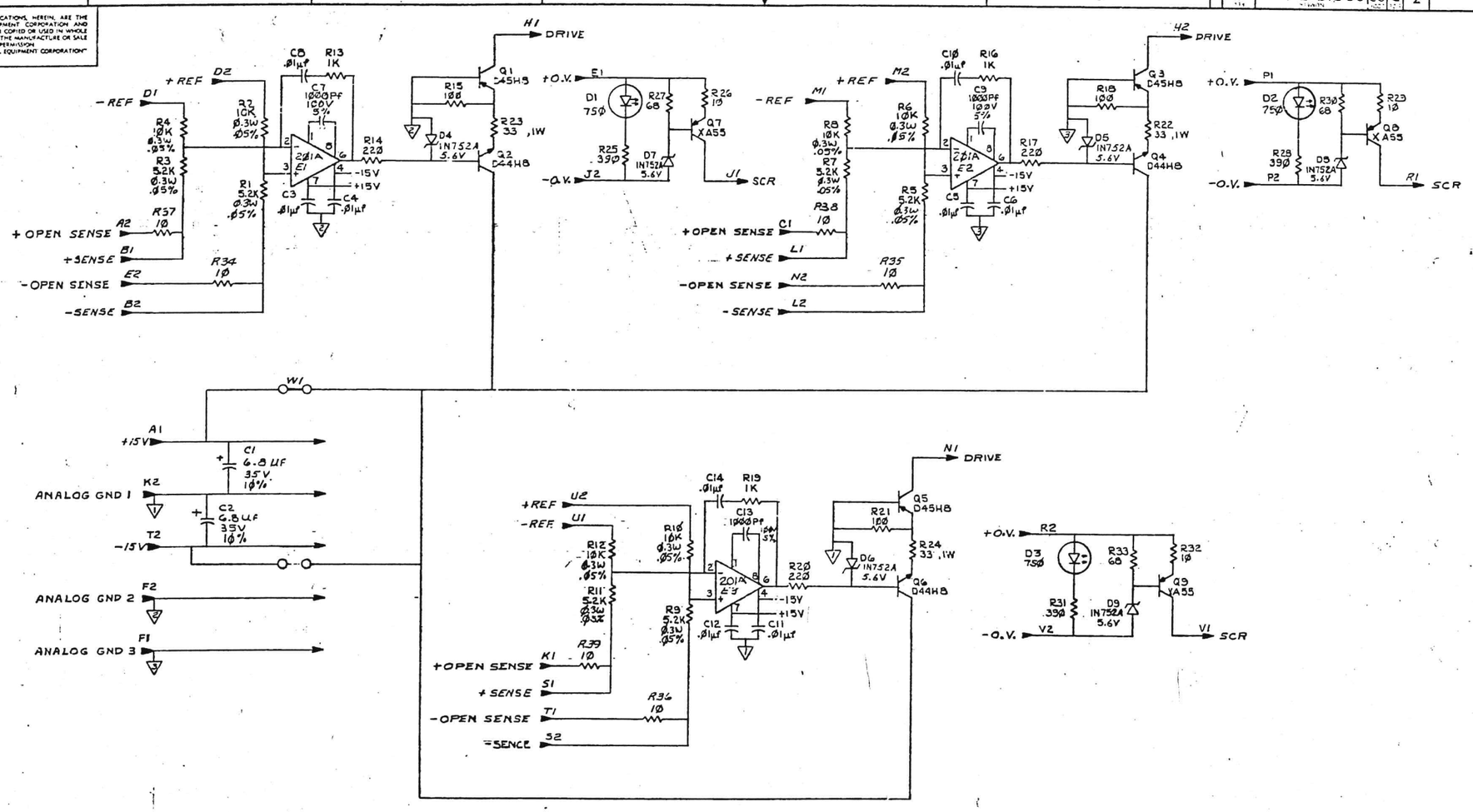

NOTES: 1. UNLESS OTHERWISE SPECIFIED:
A. RESISTORS ARE 1/4W ±5% RESISTANCE IN OHMS.
B. CAPACITORS ARE 50V, ±20%

REVISIONS			
CHK'D	CHANGE NO	REV	
	G8Ø1Ø-ØØØØ1	B	G.V. G8Ø1Ø-ØØØØ3 C
	DREW		J. DREW

DSN	B SALENTINE	DATE 3-5-74
CHK'D	F. MCPERRY	DATE 11-20-73
ENG	J. DREW	DATE 7-17-74
PROJ ENG	DREW	DATE 7-17-74
PROJ	B Rigsbee	DATE 7-17-74

TITLE: -5.2 VOLT CONTROL

FIRST USED ON OPTION MODEL: KL10
NEXT HIGHER ASSEMBLY:

SIZE	CODE	NUMBER	REV.
D	CS	G8Ø1Ø-Ø-1	C

SCALE: 1/1 SHEET 1 OF 1 DIST.

DEC FORM 1-1
DND 1.00

DCS G8Ø1Ø-Ø-1 C

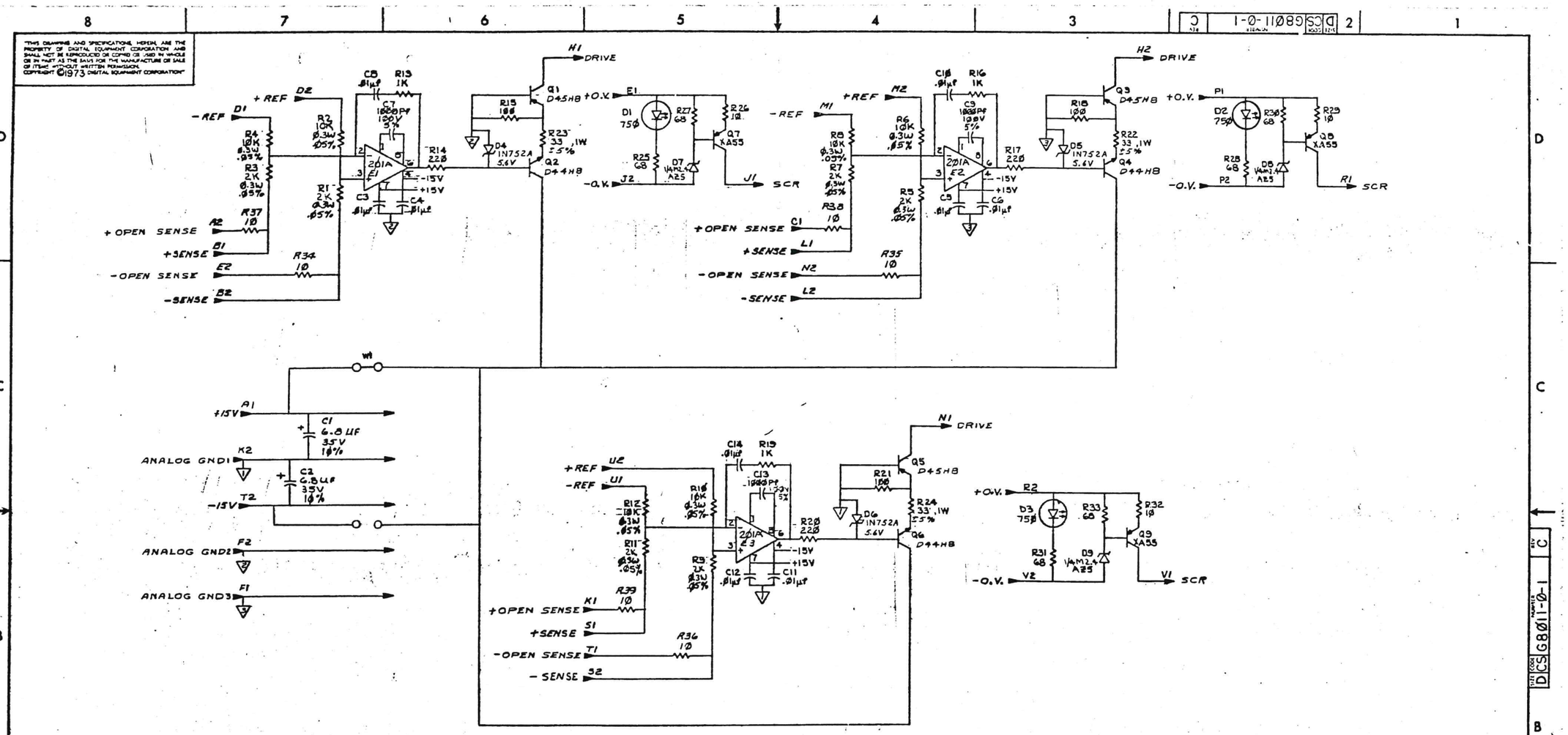

NOTES: 1. UNLESS OTHERWISE SPECIFIED:
A. RESISTANCE IS IN OHMS
B. ALL RESISTORS ARE 1/4W, ±5%
C. ALL CAPACITORS ARE 50V, ± 20%

REVISIONS				
CHK	CHANGE NO.	REV.		
	G8011-00001	B	G8011-00003	C
	J. DREW		J. DREW	

DRN	DUGGAN	DATE	
CHKD	P. BOSSMAN	DATE	
ENG	J. DREW	DATE	
PROJ ENG	J. DREW	DATE	
PROD	J. RECEK	DATE	

-2 VOLT CONTROL

FIRST USED ON OPTION MODEL: KL10
NEXT HIGHER ASSEMBLY:
SIZE D CODE CS NUMBER G8011-0-1 REV. C
SCALE SHEET 1 OF 1
DIST.

"THIS DRAWING AND SPECIFICATIONS, HEREIN, ARE THE PROPERTY OF DIGITAL EQUIPMENT CORPORATION AND SHALL NOT BE REPRODUCED OR COPIED OR USED IN WHOLE OR IN PART AS THE BASIS FOR THE MANUFACTURE OR SALE OF ITEMS WITHOUT WRITTEN PERMISSION. COPYRIGHT © 1975, DIGITAL EQUIPMENT CORPORATION"

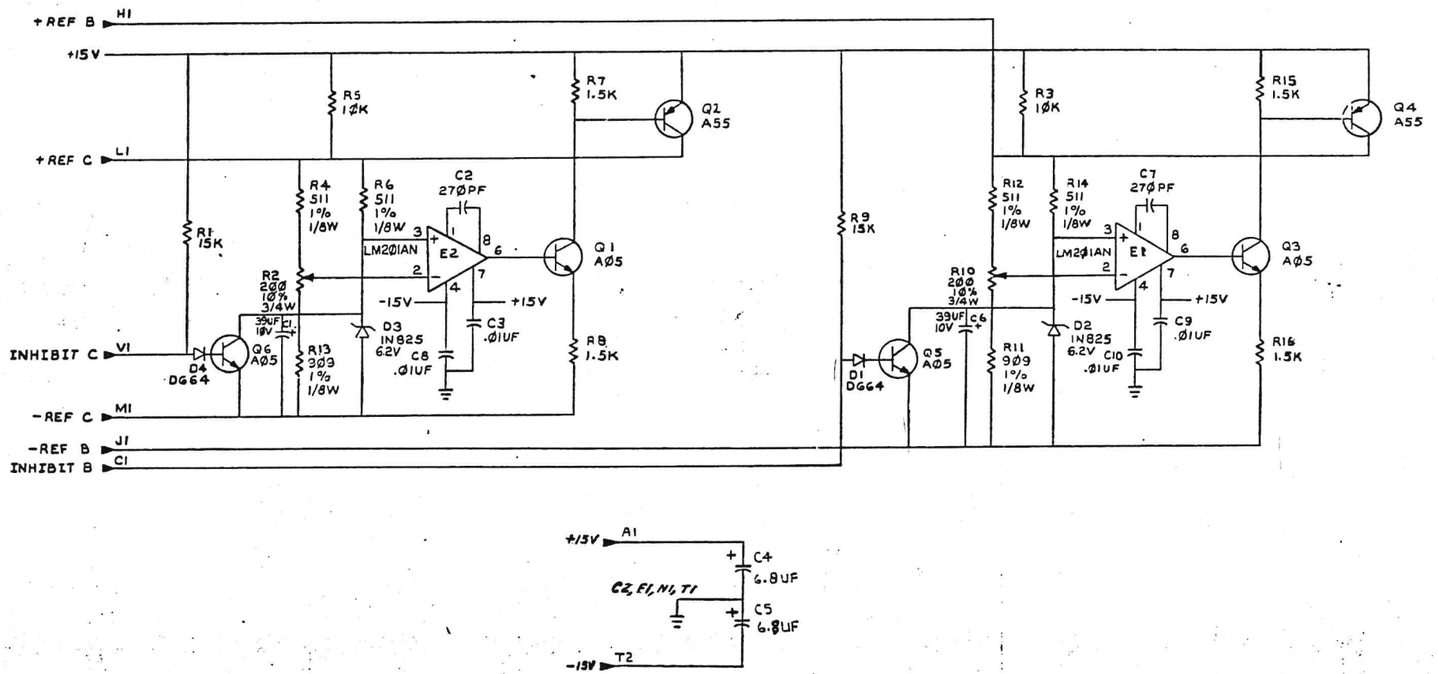

REVISIONS		
CHK	CHANGE NO	REV
[illegible]	G8013-00001	B
	B Chartier 4-16-75	
	J DREW	
	[illegible] 10/1/75	

NEXT HIGHER ASSY B-DD-G8013-0

DRN	DATE	CHK'D	DATE	ENG	DATE	PROJ ENG	DATE	PROD	DATE
H. DENSMORE	4-10-75	[illegible]	9-25-75	[illegible]	[illegible]	[illegible]	[illegible]		

TITLE +10V REFERENCE

SIZE D | CODE CS | NUMBER G8013-0-1 | REV. B

SCALE — | SHEET 1 OF 1 | DIST.

DEC FORM NO. DRD 137

"THIS DRAWING AND SPECIFICATIONS, HEREIN, ARE THE PROPERTY OF DIGITAL EQUIPMENT CORPORATION AND SHALL NOT BE REPRODUCED OR COPIED OR USED IN WHOLE OR IN PART AS THE BASIS OF THE MANUFACTURE OR SALE OF ITEMS WITHOUT WRITTEN PERMISSION.
COPYRIGHT © 1973, DIGITAL EQUIPMENT CORPORATION"

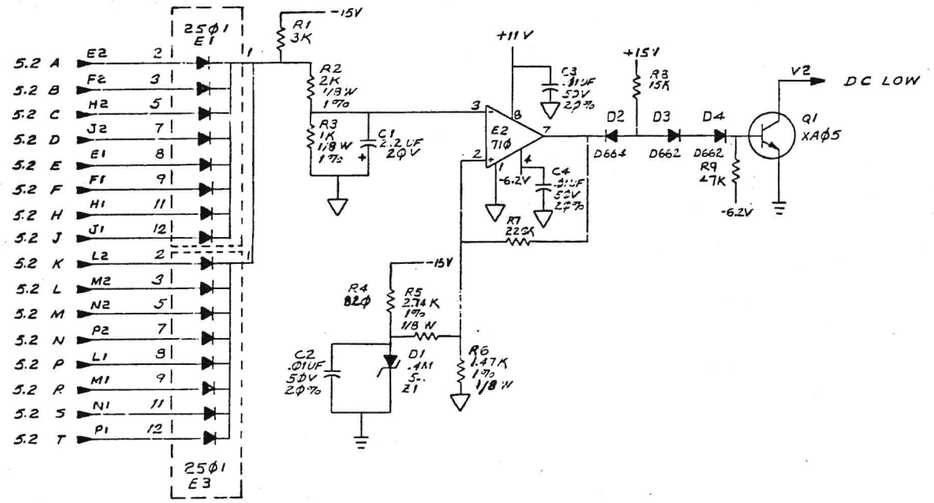

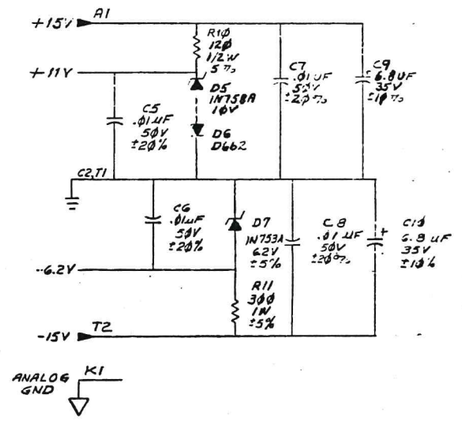

REVISIONS		
CHK	CHANGE NO	REV
	G8214-00001	B
	J. DREW	

DRN. B. NICHOL	DATE 7-23-73	ENG. JIM DREW	
CHK'D	DATE 10/2/73	NEXT HIGHER ASSY. B-BD-G8214-0-0	
TITLE LOW VOLTAGE DETECTOR		SIZE D	CODE CS	NUMBER G8214-T-1	REV. B
SCALE	SHEET 1 OF 1	DIST.			

G8214-T-1 B

"THIS DRAWING AND SPECIFICATIONS, HEREIN, ARE THE PROPERTY OF DIGITAL EQUIPMENT CORPORATION AND SHALL NOT BE REPRODUCED OR COPIED OR USED IN WHOLE OR IN PART AS THE BASIS FOR THE MANUFACTURE OR SALE OF ITEMS WITHOUT WRITTEN PERMISSION.
COPYRIGHT © DIGITAL EQUIPMENT CORPORATION"

NOTES:

1 UNLESS OTHERWISE SPECIFIED:
A. RESISTANCE IS IN OHMS/ALL RESISTORS ARE 1/4W ±5%

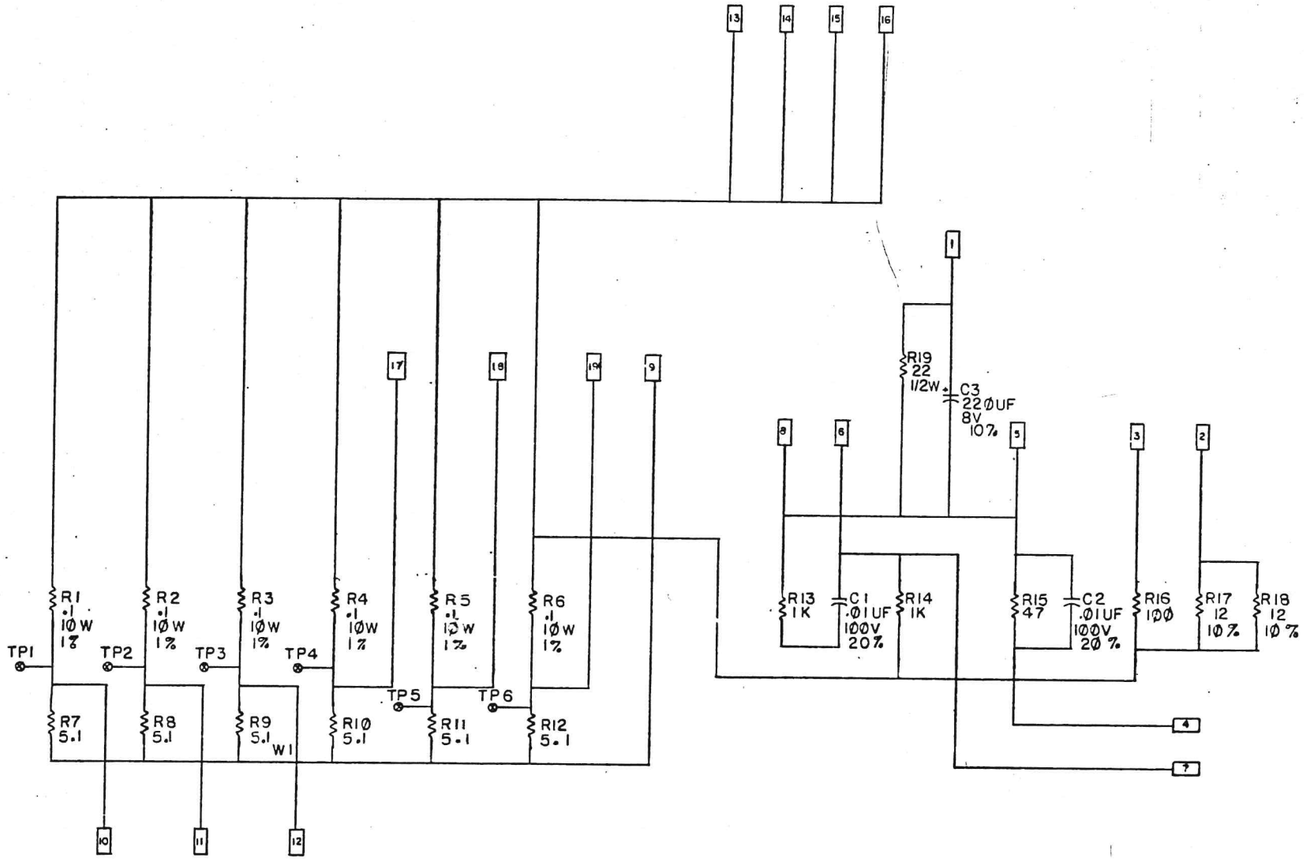

IC TYPE	GND	+5V

GND AND 5V ARE USUALLY PIN 7 AND 14 RESPECTIVELY EXCEPTIONS ARE STATED ABOVE

IC PIN LOCATIONS

FIRST USED ON OPTION MODEL: H761

QTY	REF. DESIGNATION	DESCRIPTION	PART NO.	ITEM NO.

PARTS LIST

ETCH BOARD REV. B

DEC NO.	EIA NO.	DEC NO.	EIA NO.

SEMICONDUCTOR CONVERSION CHART

REV.	REVISIONS	CHK	DATE
B	ORIGINATED 5410663-00001	JIM DREW	1/10/75
A			

DRN. JIM DREW 1/10/75
CHK. [illegible] DATE 1/27/75
ENG. [illegible] DATE 1/27/75
PROJ. ENG. [illegible] DATE 1/27/75
PROD. DATE
NEXT HIGHER ASSY

digital

TITLE: SERIES PASS - 20V BOARD

SIZE	CODE	NUMBER	REV.
D	CS	5410663-0-1	B

SCALE — SHEET — OF — DIST.

FIRST USED ON 5410663-0-1 REV. B
FSCM CODE DCS
NUMBER 5410663-0-1

"THIS DRAWING AND SPECIFICATIONS, HEREIN, ARE THE PROPERTY OF DIGITAL EQUIPMENT CORPORATION AND SHALL NOT BE REPRODUCED OR COPIED OR USED IN WHOLE OR IN PART AS THE BASIS FOR THE MANUFACTURE OR SALE OF ITEMS WITHOUT WRITTEN PERMISSION.
COPYRIGHT © DIGITAL EQUIPMENT CORPORATION"

NOTES:
UNLESS OTHERWISE SPECIFIED RESITORS ARE 1/4W ±5% AND RESITANCE IS IN OHMS.

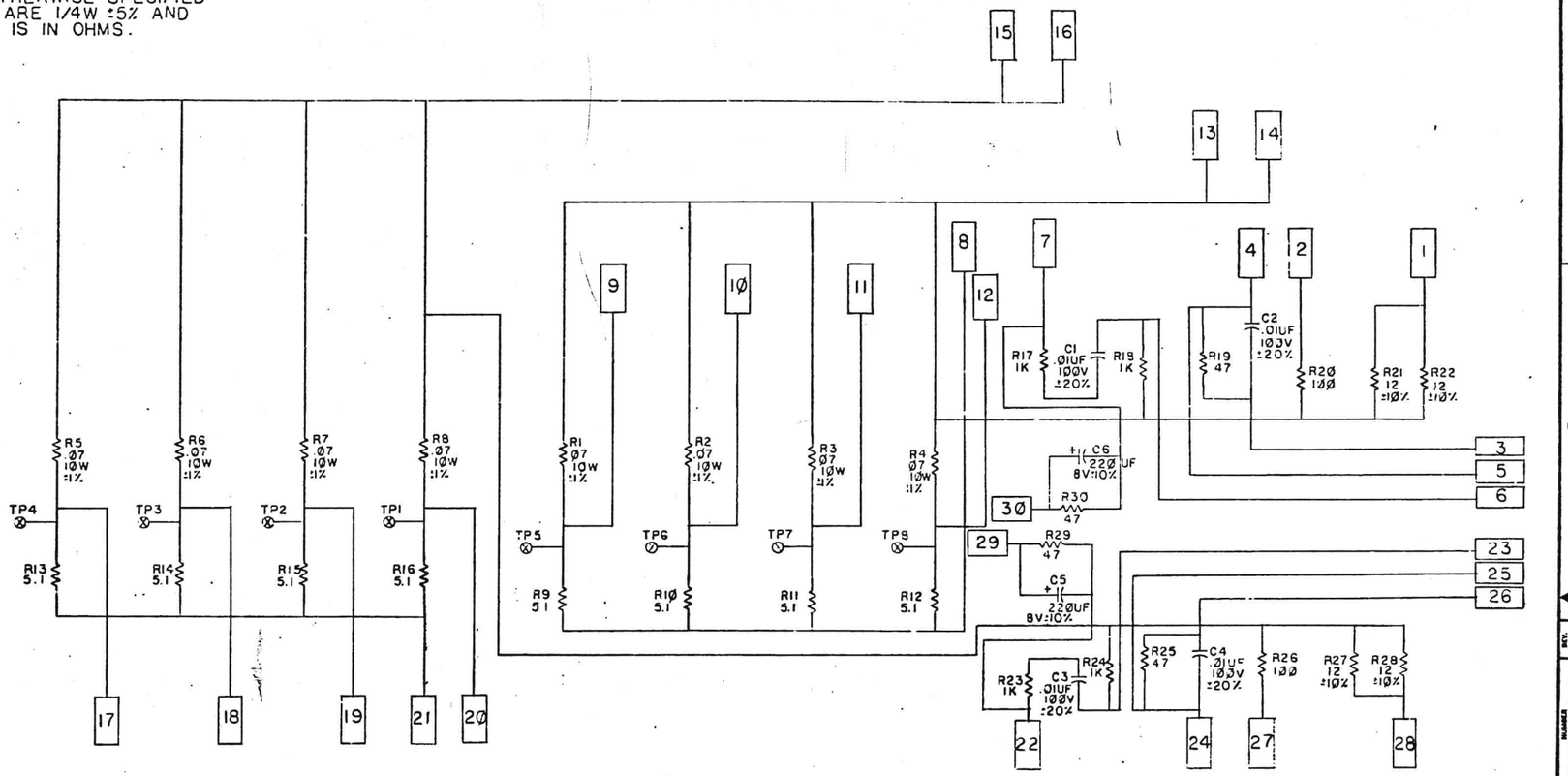

IC TYPE	GND	+5V

GND AND 5V ARE USUALLY PIN 7 AND 14 RESPECTIVELY EXCEPTIONS ARE STATED ABOVE

IC PIN LOCATIONS

FIRST USED ON OPTION MODEL: H761

QTY	REF. DESIGNATION	DESCRIPTION	PART NO.	ITEM NO.

PARTS LIST

ETCH BOARD REV.

DEC NO.	EIA NO.	DEC NO.	EIA NO.

SEMICONDUCTOR CONVERSION CHART

JIM DREW 5410665-00001 B

REVISIONS

DRN. DATE
CHKD. DATE
ENG. DATE
PROJ. ENG. DATE
PROD. DATE

NEXT HIGHER ASSY 7009405

SCALE
SHEET 1 OF 1

digital

TITLE -5.2V BOARD

SIZE	CODE	NUMBER	REV.
D	CS	5410665-0-1	B

DIST.

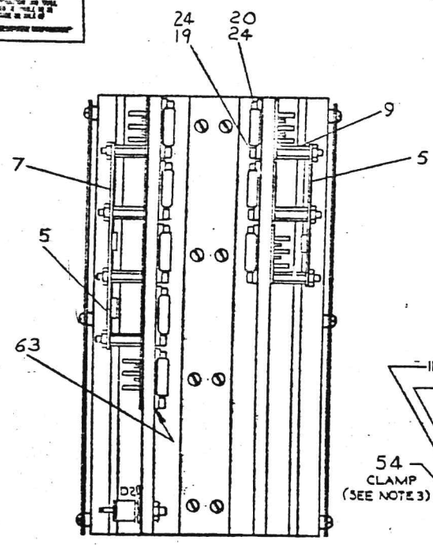

VIEW B-B

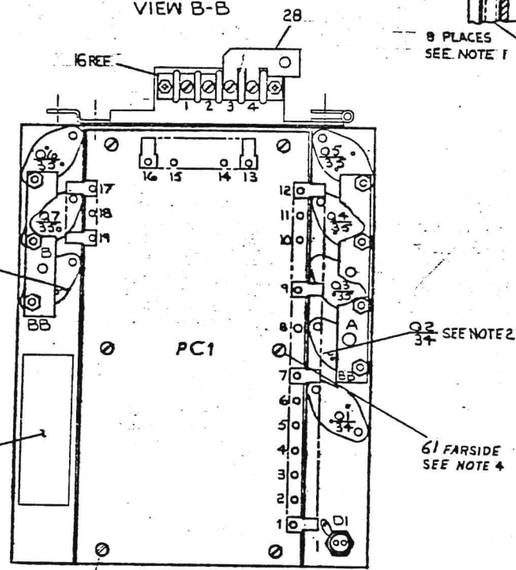

VIEW A-A

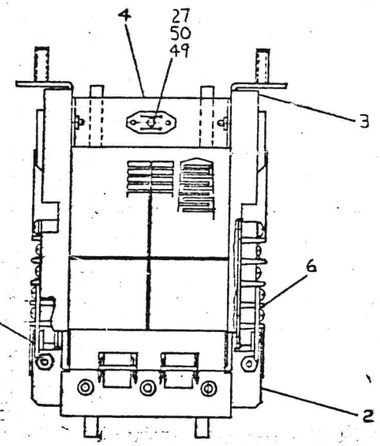

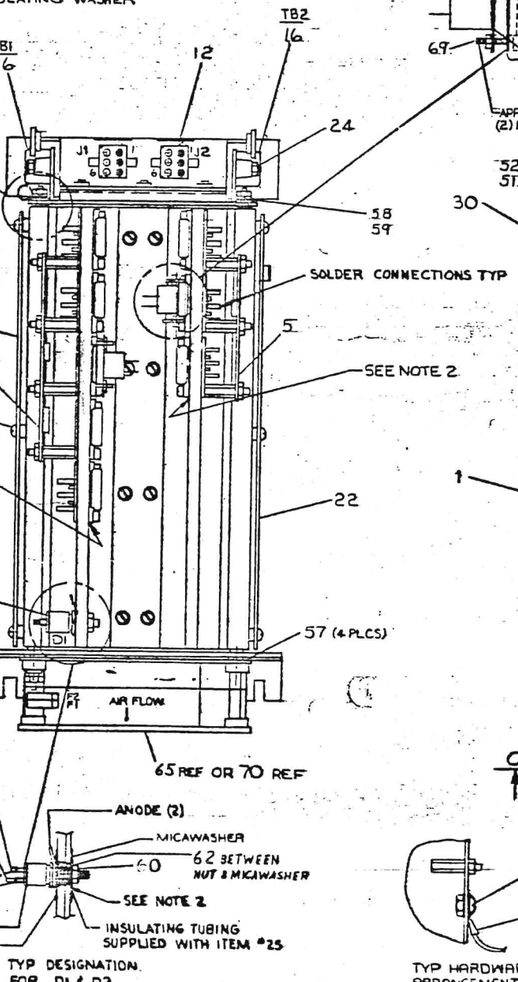

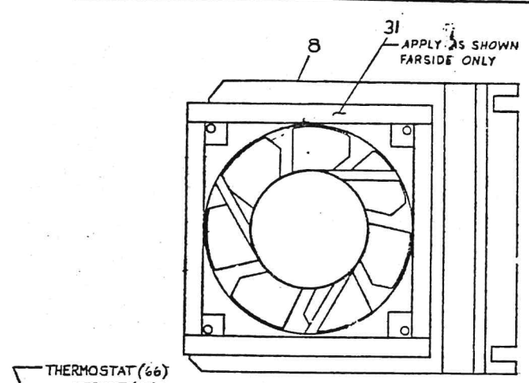

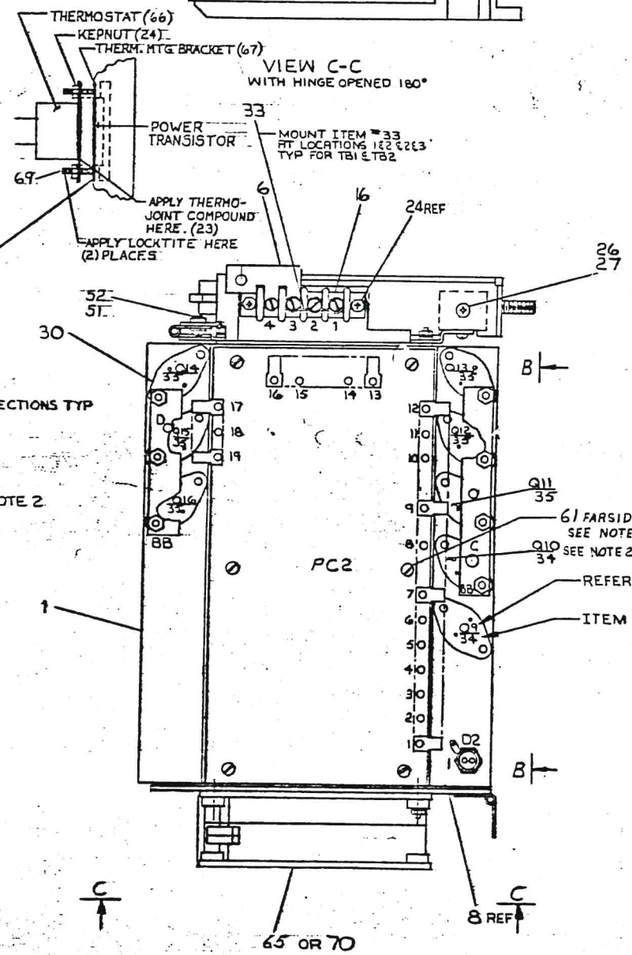

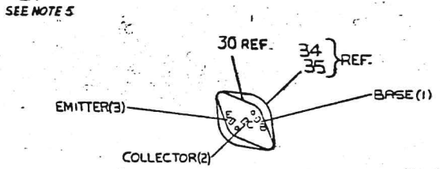

TYP DESIGNATION
FOR Q1 THRU Q16
SOCKET

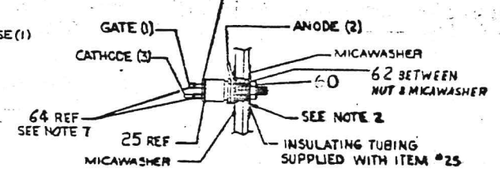

TYP DESIGNATION
FOR D1 & D2

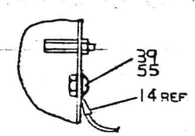

TYP HARDWARE
ARRANGEMENT FOR
BUSSING BAR (BB)

NOTES:

1. INSULATING TUBING (4 PCS), #4-40 THREADED ROD (4 PCS), LOCK WASHER, FLAT WASHER, INSULATING WASHER AND HEX NUT (8 EACH) SUPPLIED WITH ITEM #1.
2. APPLY ITEM #23 THERMAL JOINT COMPOUND TO CONTACTING SURFACES OF TRANSISTORS ITEM #35 (#34 (2 ONLY) ALSO TO BOTH SIDES OF MICA WASHERS SUPPLIED WITH ITEM #25.
3. USE CLAMP (ITEM 54) NEAR TERMINALS (ITEM 16) ONLY, 2 PLACES.
4. INSTALL NYLON FLAT WASHER ITEM #61 BETWEEN SPACER AND BOARD 2 PLACES.
5. FOR ITEM #29 P/N 5008407-01 MAY BE SUBSTITUTED.
6. DRILL OUT HOLES IN ITEM 30 TO .144" DIA. BEFORE STARTING ASSY.
7. ADD 3/16 IN. TUBING (ITEM 64) TO CATHODE BEFORE ATTACHING WIRE. ADD 3/16 IN. TUBING (ITEM 64) TO GATE AFTER ATTACHING WIRE.
8. APPLY ITEM #23 THERMAL JOINT COMPOUND TO CONTACTING SURFACES OF THERMOSTATS.
9. APPLY LOCKTITE ITEM #60 TO THREADS OF STUDS ON THERMOSTAT MTG BRACKET ITEM #67 AFTER NUT IS INSTALLED.

REVISIONS			
LTR	CHANGE NO.		BY
A	7005404 00001		J. DREW
B			J. MCELHOY
C			J. MCELHOY
D			J. MCELHOY
E			J. MCELHOY
F			R. SCOTT

FIRST USED ON OPTION/MODEL	QTY.	DESCRIPTION	PART NO.
KL10		PARTS LIST	

UNLESS OTHERWISE SPECIFIED
TOLERANCES
DECIMALS / FRACTIONS / ANGLES
MATERIAL DESIGNATION DIGITALLY CONTROLLED
MACHINE SURFACES AND EDGES BREAK
DIMENSIONS

EQUIPMENT CORPORATION

TITLE: REGULATED HEAT SINK ASSY. (-2.0V)

HEAT SINK ASSY
D-UA-H761-3-0

7009404-0-0

PROPERTY OF DATA EQUIPMENT CORPORATION AND THE INFORMATION HEREON SHALL NOT BE REPRODUCED OR USED IN WHOLE OR IN PART AS THE BASIS FOR THE MANUFACTURE OR SALE OF ITEMS WITHOUT WRITTEN PERMISSION.
COPYRIGHT © 1973 DATA EQUIPMENT CORPORATION

WIRE TABLE

ITEM NO.	DESCRIPTION AWG.	COLOR	FROM CONN	FROM WITH	TO CONN	TO WITH	REMARKS
40	14	GRN	PC1-2	37	Q1-3	SOLD	
			PC1-3	37	Q2-3	SOLD	
			Q3-1	SOLD	Q4-1	SOLD	
			Q5-1	SOLD	Q6-1	SOLD	
			Q7-1	SOLD	Q8-1		
40	14						
41	18	GRN	PC1-4	37	D1-1	SOLD	
46	18	BRN			J1-2	12	
40	14	GRN	PC1-5	37	D1-3	SOLD	
40	14	GRN	PC1-6	37	Q1-2	SOLD	
41	18	GRN	PC1-7	37	Q2-1	SOLD	
47	18	GRY/BRN			J1-1	12	
40	14	GRN	PC1-8	37	Q2-2	SOLD	
			PC1-9		Q1-1		
			PC1-10		Q3-3		
			PC1-11		Q4-3		
			PC1-12		Q5-3		
			PC1-17		Q6-3		
			PC1-18		Q7-3		
			PC1-19		Q8-3	SOLD	
			PC1-13		TB1-4	36	
			PC1-14		TB1-3		
			PC1-15		TB1-2		
40	14	GRN	PC1-16	37	TB1-1	36	
						SOLD	
44	14	BLK	PC1-1	56	D1-2	12	
					J1-3		
45	10	RED	BB-A	14.39	BB-B	14.39	
45	10	RED	BB-C	14.39	BB-D	14.39	

WIRE TABLE

ITEM NO.	DESCRIPTION AWG.	COLOR	FROM CONN	FROM WITH	TO CONN	TO WITH	REMARKS
40	14	GRN	PC2-2	37	Q9-3	SOLD	
			PC2-3	37	Q10-3	SOLD	
			Q11-1	SOLD	Q12-1	SOLD	
			Q13-1	SOLD	Q14-1	SOLD	
			Q15-1	SOLD	Q16-1	SOLD	
40	14						
41	18	GRN	PC2-6	37	D2-1	SOLD	
43	18	RED			J2-2	12	
40	14	GRN	PC2-5	37	D2-3	SOLD	
40	14	GRN	PC2-6	37	Q9-2	SOLD	
41	18	GRN	PC2-7	37	Q10-1	SOLD	
42	18	GRY/RED			J2-1	12	
40	14	GRN	PC2-8	37	Q10-2	SOLD	
			PC2-9		Q9-1		
			PC2-0		Q11-3		
			PC2-1		Q12-3		
			PC2-12		Q13-3		
			PC2-17		Q14-3		
			PC2-18		Q15-3		
			PC2-19		Q16-3	SOLD	
			PC2-13		TB2-1	36	
			PC2-14		TB2-2		
			PC2-15		TB2-3		
40	14	GRN	PC2-16	37	TB2-4	36	
44	14	BLK	PC2-1	56	D2-2	SOLD	
					J2-3	12	

REVISIONS

CHK	CHANGE NO.	REV.

TITLE REGULATED H.S. | SIZE CODE | NUMBER | REV.

SIZE B | CODE 80009 | 7009404-00F

MR

SHEET A1 OF A2

AUTOMATED BY PRTLST.5R(52)

PARTS LIST

LINE	ITEM	TOP DOCUMENT	PART NUMBER	MIN REV	DESCRIPTION	QTY PER VARIATION 00	01
					VARIATION REVISION LEVEL:	F	A
1	1		1211480-00	D	HEAT SINKS, 8.900X4.68	1	1
2	2	D-IA-7411262-0-0	7411262-00		PLATE HEAT SINK MTG (KL10)	1	1
3	3	D-IA-7411000-0-0	7411000-00		SUPPORT HEAT SINK (KL10)	1	1
4	4	C-IA-7410999-0-0	7410999-00	A	CONN BRACKET (KL10)	1	1
5	5	C-IA-7411136-0-0	7411136-01		BUSSING STRIP (KL10)	2	2
6	6	C-IA-7411137-0-0	7411137-01		BUSSING STRIP NO 2 (KL10)	1	1
7	7	C-IA-7411136-0-0	7411136-02		BUSSING STRIP (KL10)	2	2
8	8	E-IA-7411001-0-0	7411001-00		FAN BRKT (KL10)	1	1
9	9	B-MD-7411295-0-0	7411295-00	A	STANDOFF BUSHING (KL10)	14	14
10	10		1209350-06		MATE-N-LOK 06SKT(3X02).240CC HSG	2	2
11	11	BLANK				0	0
12	12		1209379-00		MATE-N-LOK 01SKT 20-14AWG .08200	6	6
13	13		1210930-01	E	*** THIS ITEM IS NOT USED ***	-	-
14	14		9007926-01		TERM,RING #10STUD CRIMP 10-1	4	4
15	15		9007031-00	B	TIE,CABLE BUNDL.DIA 0- 3/4"=101	6	6
16	16		1203346-00	A	TERM BLOCK 04POS(1X04).437CC	2	2
17	17	BLANK				0	0
18	18	BLANK				0	0
19	19		9009648-08	A	SCREW,CAP SOC HEX 6-	14	14
20	20		9006331-08	A	SCREW,CAP SOC HEX 6-	16	16
21	21	BLANK				0	0
22	22	D-CS-5410663-0-0	5410663-01		PCB (70-9404) H761	2	2
23	23		9008268-00	A	COMPOUND, THERMAL JOINT	A/R	A/R
24	24		9008185-00	A	NUT,HEX EXT TOOTH LCK#SER 6-32	40	40
25	25		1111481-00	A	SCR PIV= 10 IO=35.00A	2	2
26	26		9006021-01	A	SCREW,MACH PAN PHIL 5-	2	2
27	27		9006633-00	A	WASHER,LOCK INTERNAL STEEL	3	3
28	28	C-IA-7411137-0-0	7411137-02		BUSSING STRIP NO 2 (KL10)	1	1
29	29		9008201-01	A	SCREW,TAP PAN SLOT 6-	12	12
30	30		1210130-00	A	SKT,XSTR 02PIN CAD TO-3	16	16

REVISION HISTORY			BASIC PART NO: 7009404
ENG	ECO NUMBER	REV	SECTION A OF A
	INITIAL	F	SECTION.VARIATION INDEX [A]00,01 [B] [C] [D] [E] [F]

DRN: K. GAMACHE	DATE: 21 DEC 73	D I G I T A L	
CHK'D: D. HEALY	DATE: 2 FEB 74	TITLE PARTS LIST REGULATED HEAT SINK ASSY -2.0V]	
DES.ENG: J. DREW	DATE: 7 JUL 74	DOCUMENT NUMBER	
RESP.ENG.: J. DREW	DATE: 7 JUL 74	SIZE: K / CODE: PL / NUMBER: 7009404-0-08P / REV: F	
MFG.ENG.: R. O'BRIAN	DATE: 6 SEP 74	RELEASE DATE: 06-MAR-84	
ASSEMBLY NUMBER: D-UA-7009404-0-0	TOP DOCUMENT NUMBER: D-UA-7009404-0-0	FILE NAME: ZJ454F.PLS	EDIT #: 6

"THIS DRAWING AND THE SPECIFICATIONS CONTAINED HEREIN ARE CONFIDENTIAL AND PROPRIETARY. THEY ARE THE PROPERTY OF DIGITAL EQUIPMENT CORPORATION AND SHALL NOT BE REPRODUCED OR COPIED OR USED IN WHOLE OR IN PART AS THE BASIS FOR THE MANUFACTURE OR SALE OF ITEMS WITHOUT WRITTEN PERMISSION. THIS IS AN UNPUBLISHED WORK PROTECTED UNDER THE FEDERAL COPYRIGHT LAWS."

MRO

MR

AUTOMATED BY PRTLST.5R(52)

SHEET A2 OF A2

PARTS LIST

LINE	ITEM	TOP DOCUMENT	PART NUMBER	MIN REV	DESCRIPTION	QTY PER VARIATION 00 F	01 A
					VARIATION REVISION LEVEL:		
31	31		9008274-00	B	FOAM, TAPE 3/8" X 3/8" BLACK	A/R	A/R
32	32		9009283-00	A	SPACER,CLEAR HOLE HEX ALUM 6	12	12
33	33		9009002-00		TERM BLOCK JUMPER	4	4
34	34		1503068-00	A	DEC3715 NPN 150WC SI 60 50 W	4	4
35	35		1509730-00	B	DEC5301 NPN 200WC SI 40 20 W	12	12
36	36		9007928-00		TERM,RING #10STUD CRIMP 14-1	8	8
37	37		9007969-00		TERM,QUICK .300TAB CRIMP 14-1	36	36
38	38		9007970-00		*** THIS ITEM IS NOT USED ***	-	-
39	39		9006070-01	A	SCREW,MACH PAN PHIL 10-	4	4
40	40		9107370-55	A	WIRE, 14AWG19/.0147IPVC 150V	A/R	A/R
41	41		9107360-55	A	WIRE, 18AWG(19/30)IPVC 150V	A/R	A/R
42	42		9107410-82	A	WIRE, 18AWG(19/30)IPVC 150V	A/R	A/R
43	43		9107360-22	A	WIRE, 18AWG(19/30)IPVC 150V	A/R	A/R
44	44		9107370-00	A	WIRE, 14AWG19/.0147IPVC 150V	A/R	A/R
45	45		9107390-22	A	WIRE, 10AWG(105/30_IPVC 300V1	A/R	A/R
46	46		9107360-11	A	WIRE, 18AWG(19/30)IPVC 150V	A/R	A/R
47	47		9107410-81	A	WIRE, 18AWG(19/30)IPVC 150V	A/R	A/R
48	48		9107430-29	A	*** THIS ITEM IS NOT USED ***	-	-
49	49		9007775-00	A	STUD,BALL .250X0.447	1	1
50	50		9006020-01	A	SCREW,MACH PAN PHIL 5-	1	1
51	51		9006037-01	A	SCREW,MACH PAN PHIL 8-	3	3
52	52		9006634-00	A	WASHER,LOCK INTERNAL STEEL	3	3
53	53		9009255-00	B	LABEL, POWER SUPPLY, 2-15/16 " L	1	1
54	54		9007080-00	A	CLAMP,CABLE,SCREW MTD. 3/16"	2	2
55	55		9006635-00	A	WASHER,LOCK INTERNAL STEEL	4	4
56	56		9007920-00		TERM QUICK .300TAB CRIMP 12-1	2	2
57	57		9006557-00	A	NUT,HEX EXT TOOTH LCKWSHR 4-40	4	4
58	58		9007046-00	A	GROMMET,STRIP POLYETHELENE	A/R	A/R
59	59		9007594-00	A	ADHESIVE,NEOPRENE	A/R	A/R
60	60		9009321-00	A	LOCK TITE, SCREW LOCK, 10CC PER	A/R	A/R
61	61		9006707-00	A	WASHER,FLAT NYLON	2	2
62	62		9006669-00	A	WASHER,FLAT SST	2	2
63	63		1213071-02		INSULATOR,RUBBER SILICONE SM	2	2
64	64		9107714-00	A	TUBING,SHRINK .093ID EXP	A/R	A/R
65	65		1210930-02		FAN,TUBE AXIAL 4.5" 100CFM 230V	1	-
66	66		1215041-00	A	THERMOSTAT,O@190,C@230,SPST	2	2
67	67		7419817-00		BRKT THERMOSTAT MTG	1	1
68	68		7419817-01		BRKT THERMOSTAT MTG	1	1
69	69		9005332-03	A	SCREW,CAP SOC HEX 6-	2	2
70	70		1217916-02	A	FAN,TUBE AXIAL 4.5" 120CFM 230V	-	1

DIGITAL	TITLE	SECTION	SIZE	CODE	DOCUMENT NUMBER	REV
	REGULATED HEAT SINK ASSY -2.0V3	A OF A	E	PL	7009404-0-D8P	F

MRO

THIS DRAWING AND SPECIFICATION, HEREIN, IS THE PROPERTY OF DIGITAL EQUIPMENT CORPORATION AND SHALL NOT BE REPRODUCED OR COPIED OR USED IN WHOLE OR IN PART AS THE BASIS FOR THE MANUFACTURE OR SALE OF ITEMS WITHOUT WRITTEN PERMISSION.
COPYRIGHT © 1973, DIGITAL EQUIPMENT CORP.-MASS.

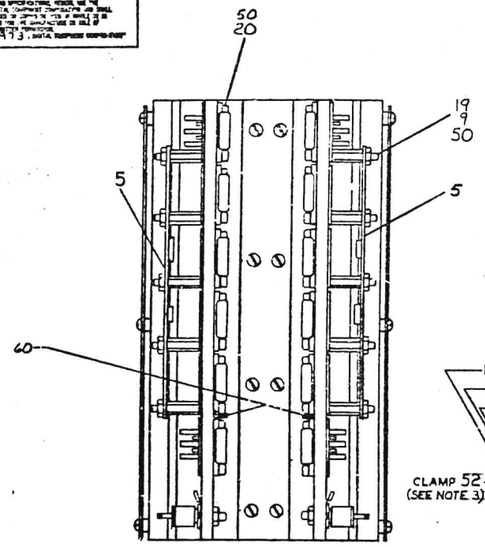

VIEW B-B

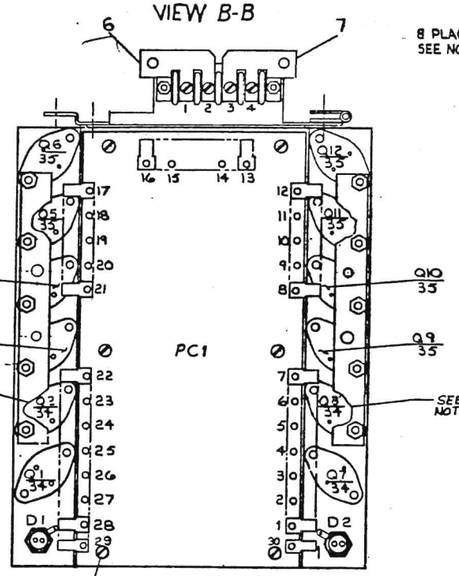

VIEW A-A

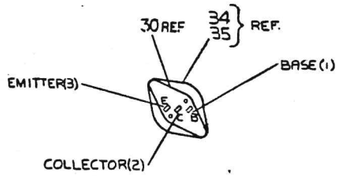

TYP DESIGNATION FOR Q1 THRU Q24 SOCKET

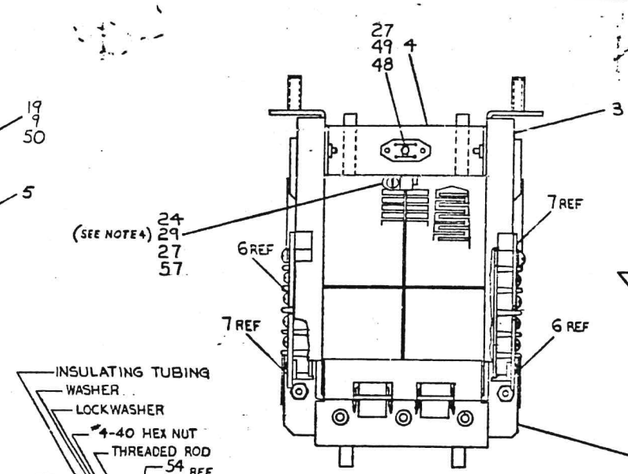

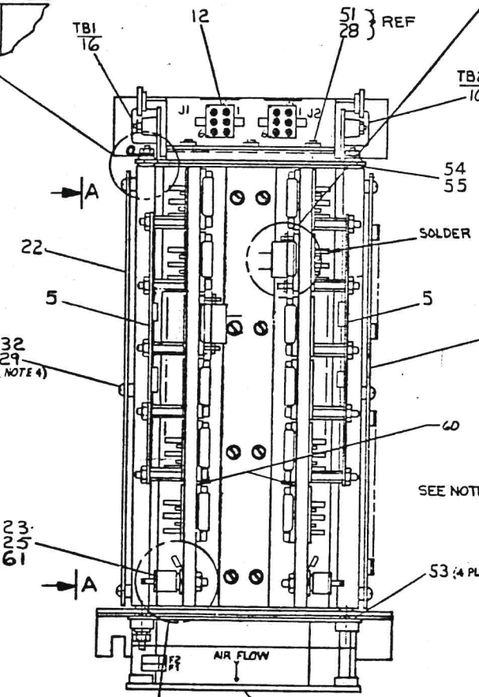

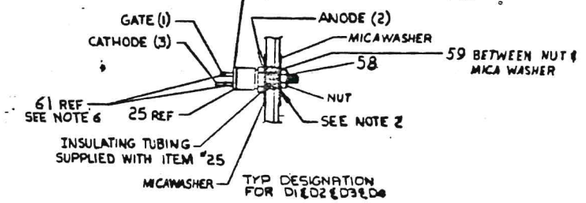

TYP DESIGNATION FOR D1 & D2 & D3 & D4

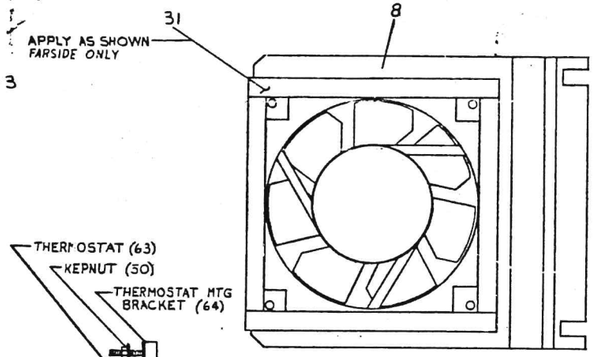

VIEW C-C
WITH HINGE OPENED 180°

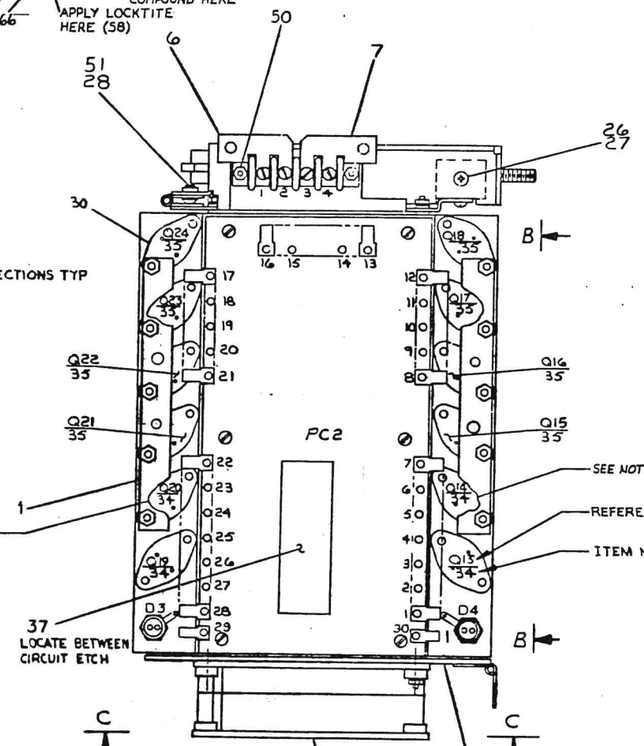

NOTES:

1. INSULATING TUBING (4 PCS), #4-40 THREADED ROD (4 PCS), LOCK WASHER, FLAT WASHER, INSULATING WASHER AND HEX NUT (8 EACH) SUPPLIED WITH ITEM 1.
2. APPLY ITEM #23 THERMAL JOINT COMPOUND TO CONTACTING SURFACES OF TRANSISTORS ITEM #34 (22) & 35 ALSO TO BOTH SIDES OF MICA WASHERS SUPPLIED WITH ITEM #25 ~~AND #34 (4 ONLY) MICA WASHERS~~.
3. USE CLAMP (ITEM 52) NEAR TERMINALS (ITEM 16) ONLY, 2 PLACES.
4. ITEM #29 MAY BE SUBSTITUED BY P/N 9008407-01
5. DRILL OUT HOLES IN ITEM 30 TO .144" DIA BEFORE STARTING ASSY.
6. ADD 3/16 IN. TUBING (ITEM) 61 TO CATHODE BEFORE ATTACHING WIRE. ADD 3/16 IN. TUBING (ITEM 61) TO GATE AFTER ATTACHING WIRE.
7. APPLY ITEM #23 THERMAL JOINT COMPOUND TO CONTACTING SURFACES OF THERMOSTATS ITEM #63
8. APPLY LOCKTITE (ITEM 58) TO THREADS ON STUDS OF MTG BRKT ITEM #64 AFTER INSTALLING NUTS.

REVISIONS			
REV	CHANGE NO.		
A	7009405-20001	4-FEB-72	C. PROVIDENT
B	7009405-00002	6-APR-73	J. PROVIDENT
C	7009405-00003	17-FEB-77	J. PROVIDENT
D	7009405-00004	[illegible]	J. DREW
E	7009405-00005	[illegible]	J. MCELROY
F	H761-MH009	[illegible]	J. MCELROY
G	[illegible]	[illegible]	R. SCOTT

FIRST USED ON OPTION/MODEL: KLIØ

QTY.	DESCRIPTION	PART NO.	ITEM NO.
	PARTS LIST		

UNLESS OTHERWISE SPECIFIED
DIMENSIONS IN INCHES
TOLERANCES
FRACTIONS ±1/32
DECIMALS .X ±.1 .XX ±.03 .XXX ±.010
ANGLES ±1°
FINISH, MATERIAL, TOLERANCE, HANDLING, MARKING, AND SPECIAL REQUIREMENT DIMENSIONS

DRAWN	DATE	EQUIPMENT CORPORATION
CHECKED	DATE	
ENGINEER	DATE	
NEXT HIGHER ASSY		

TITLE: REGULATED HEAT SINK ASSY (-5.2V)

SIZE: D | NO. 7009405-0-0 | REV: F

E-UA-H781-0-0

1 OF 3

"THIS DRAWING AND SPECIFICATIONS, NOW OR, ARE THE PROPERTY OF DIGITAL EQUIPMENT CORPORATION AND SHALL NOT BE REPRODUCED IN COPY OR USED IN WHOLE OR IN PART AS THE BASIS FOR THE MANUFACTURE OR SALE OF ITEMS WITHOUT WRITTEN PERMISSION.
COPYRIGHT © 19 , DIGITAL EQUIPMENT CORPORATION"

WIRE TABLE

ITEM NO.	DESCRIPTION A.C.	AWG.	COLOR	FROM CONN.	FROM WITH	TO CONN.	TO WITH	REMARKS
39		14	GRY	PC1-29	36	Q1-3	SOLD	
				PC1-27	36	Q2-3		
				Q3-1	SOLD			
						Q4-1		
				Q5-1				
					SOLD	Q6-1		
38		14	GRY	PC1-25	36	D1-3	SOLD	
42		18	Y10	PC1-26	36	J1-5	12	
41			GRY			D1-1	SOLD	
45			GRY/Y10	PC1-23	36	J1-4	12	
41			GRY			Q2-1	SOLD	
41		18		Q2-1	SOLD	Q1-2		
38		14		PC1-22	36	Q3-2		
				PC1-24		Q2-2		
				PC1-21		Q1-1		
				PC1-20		Q3-3		
				PC1-19		Q4-3		
				PC1-18		Q5-3		
39			GRY	PC1-17	36	Q8-3	SOLD	
~~46~~			~~BLK~~	~~D1-2~~	~~SOLD~~	~~J1-6~~	~~12~~	
38			GRY	TB1-1	14	PC1-16	33	
39			GRY	TB1-2	14	PC1-15	33	
39			GRN	TB1-3	14	PC1-14	33	
				TB1-4	14	PC1-13	33	
				PC1-1	36	Q7-3	SOLD	
				PC1-2	36	Q8-3		
				Q8-3	SOLD	Q9-1		
				Q10-1		Q11-1		
				Q12-1	SOLD			
39		14	GRN	PC1-4	36	D2-3	SOLD	
44		18	WHT	PC1-3	36	J1-2	12	
43			GRN			D2-1	SOLD	
48			GRY-WHT	PC1-6	36	J1-1	12	
43			GRN			Q9-1	SOLD	
43		18		Q9-1	SOLD	Q7-2		
39		14		PC1-7	36	Q9-2		
				PC1-5		Q8-2		
				PC1-8		Q7-1		
				PC1-9		Q9-3		
				PC1-10		Q10-3		
				PC1-11		Q11-3		
39			GRN	PC1-12	36	Q12-3	SOLD	
40			BLK	PC1-30	33	D2-2	SOLD	
						J1-3	12	
				PC1-29	33	D1-2	SOLD	
40		14	BLK			J1-6	12	

WIRE TABLE

ITEM NO.	DESCRIPTION A.C.	AWG.	COLOR	FROM CONN.	FROM WITH	TO CONN.	TO WITH	REMARKS
39		14	GRY	PC2-29	36	Q19-3	SOLD	
				PC2-27	36	Q20-3		
				Q21-1	SOLD			
				Q23-1		Q22-1		
					SOLD	Q24-1		
38		14	GRY	PC2-25	36	D3-3	SOLD	
42		18	Y10	PC2-26	36	J2-2	12	
41			GRY			D3-1	SOLD	
45			GRY/Y10	PC2-23	36	J2-1	12	
41			GRY			Q23-1	SOLD	
41		18		Q20-1	SOLD	Q19-2		
38		14		PC2-22	36	Q21-2		
				PC2-24		Q20-2		
				PC2-21		Q19-1		
				PC2-20		Q21-3		
				PC2-19		Q22-3		
				PC2-18		Q23-3		
38			GRY	PC2-17	36	Q24-3	SOLD	
~~46~~			~~BLK~~	~~D3-2~~	~~SOLD~~	~~J2-6~~	~~12~~	
39			GRY	TB2-1	14	PC2-16	33	
38			GRY	TB2-2	14	PC2-15	33	
39			GRN	TB2-3	14	PC2-14	33	
				TB2-4	14	PC2-13	33	
				PC2-1	36	Q13-3	SOLD	
				PC2-2	36	Q14-3		
				Q15-1	SOLD			
				Q17-1		Q18-1		
					SOLD	Q16-1		
39		14	GRN	PC2-4	36	D4-3	SOLD	
44		18	WHT	PC2-3	36	J2-5	12	
43			GRN			D4-1	SOLD	
48			GRY-WHT	PC2-6	36	J2-4	12	
43			GRN			Q14-1	SOLD	
43		18	GRN	Q13-2	SOLD			
39		14	GRN	PC2-5	36	Q14-2		
				PC2-7		Q15-2		
				PC2-8		Q13-1		
				PC2-9		Q15-3		
				PC2-10		Q16-3		
				PC2-11		Q17-3		
39			GRN	PC2-12	36	Q18-3	SOLD	
40			BLK	PC2-30	33	D4-2	SOLD	
						J2-6	12	
				PC2-29	33	D3-2	SOLD	
40		14	BLK			J2-3	12	

REVISIONS		
CHK	CHANGE NO.	REV

SIZE A | 70094105-0-0 | F

AUTOMATED BY PRTLST.5R(52)

P A R T S L I S T

LINE	ITEM	TOP DOCUMENT	PART NUMBER	MIN REV	DESCRIPTION	QTY PER VARIATION 00 F	01 A
					VARIATION REVISION LEVEL:		
1	1		1211480-00	D	HEAT SINKS, 8.900X4.68	1	1
2	2	D-IA-7411262-0-0	7411262-00		PLATE HEAT SINK MTG (KL10)	1	1
3	3	D-IA-7411000-0-0	7411000-00		SUPPORT HEAT SINK (KL10)	1	1
4	4	C-IA-7410999-0-0	7410999-00	A	CONN BRACKET (KL10)	1	1
5	5	C-IA-7411136-0-0	7411136-00		BUSSING STRIP NO 1 (KL10)	4	4
6	6	C-IA-7411137-0-0	7411137-01		BUSSING STRIP NO 2 (KL10)	2	2
7	7	C-IA-7411137-0-0	7411137-02		BUSSING STRIP NO 2 (KL10)	2	2
8	8	E-IA-7411001-0-0	7411001-00		FAN BRKT (KL10)	1	1
9	9	B-MD-7411295-0-0	7411295-00	A	STANDOFF BUSHING (KL10)	20	20
10	10		1209350-06		MATE-N-LOK 06SKT(3X02).240CC HSG	2	2
11	11	BLANK				0	0
12	12		1209379-02	M	MATE-N-LOK 01SKT 20-14AWG .082DD	12	12
13	13		1210930-01	E	*** THIS ITEM IS NOT USED ***	-	-
14	14		9007926-01		TERM,RING #10STUD CRIMP 10-1	8	8
15	15		9007031-00	B	TIE,CABLE BUNDL.DIA 0- 3/4"=101	7	7
16	16		1203346-00	A	TERM BLOCK 04POS(1X04).437CC	2	2
17	17	BLANK				0	0
18	18	BLANK				0	0
19	19		9009648-08	A	SCREW,CAP SOC HEX 6-	20	20
20	20		9006331-08	A	SCREW,CAP SOC HEX 5-	26	26
21	21	BLANK				0	0
22	22	D-CS-5410665-0-0	5410665-00		-5.2 REG HEAT SINK ASSY	2	2
23	23		9008268-00	A	COMPOUND, THERMAL JOINT	A/R	A/R
24	24		9007081-00	A	CLAMP,CABLE,SCREW MTD. 1/4"	1	1
25	25		1111481-00	A	SCR PIV= 10 IO=35.00A	4	4
26	26		9006021-01	A	SCREW,MACH PAN PHIL 5-	2	2
27	27		9006633-00	A	WASHER,LOCK INTERNAL STEEL	4	4
28	28		9006037-01	A	SCREW,MACH PAN PHIL 8-	3	3
29	29		9008201-01	A	SCREW,TAP PAN SLOT 5-	13	13
30	30		1210130-00	A	SKT,XSTR 02PIN CAD TO-3	24	24

REVISION HISTORY			BASIC PART NO: 7009405				
ENG	ECO NUMBER	REV	SECTION A OF A				
	INITIAL	F	SECTION.VARIATION INDEX	DRN: K. GAMACHE	DATE: 13 DEC 73	DIGITAL	
			[A]00,01	CHK'D: D. HEALY	DATE: 7 JUL 74	TITLE PARTS LIST REGULATED HEAT SINK ASSY -5.2V	
			[B]	DES.ENG: J. DREW	DATE: 19 SEP 74	DOCUMENT NUMBER	
			[C]			SIZE	CODE NUMBER REV
				RESP.ENG.: J. DREW	DATE: 19 SEP 74	K	PL 7009405-0-08P F
			[D]				
			[E]	MFG.ENG.: R. O'BRIAN	DATE: 9 NOV 74	RELEASE DATE: 06-MAR-84	
			[F]	ASSEMBLY NUMBER: D-UA-7009405-0-0	TOP DOCUMENT NUMBER: D-UA-7009405-0-0	FILE NAME: Z7455F.PLS	EDIT # 5

"THIS DRAWING AND THE SPECIFICATIONS CONTAINED HEREIN ARE CONFIDENTIAL AND PROPRIETARY. THEY ARE THE PROPERTY OF DIGITAL EQUIPMENT CORPORATION AND SHALL NOT BE REPRODUCED OR COPIED OR USED IN WHOLE OR IN PART AS THE BASIS FOR THE MANUFACTURE OR SALE OF ITEMS WITHOUT WRITTEN PERMISSION. THIS IS AN UNPUBLISHED WORK PROTECTED UNDER THE FEDERAL COPYRIGHT LAWS."

MRO

AUTOMATED BY PRTLST.5R(52)

P A R T S L I S T

LINE	ITEM	TOP DOCUMENT	PART NUMBER	MIN REV	DESCRIPTION	QTY PER VARIATION 00	01
					VARIATION REVISION LEVEL:	F	A
31	31		9008274-00	B	FOAM, TAPE 3/8" X 3/8" BLACK	A/R	A/R
32	32		9009283-00	A	SPACER,CLEAR HOLE HEX ALUM 6	12	12
33	33		9007920-00		TERM QUICK .300TAB CRIMP 12-1	12	12
34	34		1503068-00	A	DEC3715 NPN 150MC SI 60 50 W	8	8
35	35		1509730-00	B	DEC5301 NPN 200MC SI 40 20 M	16	16
36	36		9007969-00		TERM,QUICK .300TAB CRIMP 14-1	48	48
37	37		9009255-00	B	LABEL, POWER SUPPLY, 2-15/16 " L	1	1
38	38		9107370-88	A	WIRE, 14AWG19/.0147IPVC 150V	A/R	A/R
39	39		9107370-55	A	WIRE, 14AWG19/.0147IPVC 150V	A/R	A/R
40	40		9107370-00	A	WIRE, 14AWG19/.0147IPVC 150V	A/R	A/R
41	41		9107360-88	A	WIRE, 18AWG(19/30)IPVC 150V	A/R	A/R
42	42		9107360-77	A	WIRE, 18AWG(19/30)IPVC 150V	A/R	A/R
43	43		9107360-55	A	WIRE, 18AWG(19/30)IPVC 150V	A/R	A/R
44	44		9107360-99	A	WIRE, 18AWG(19/30)IPVC 150V	A/R	A/R
45	45		9107410-87	A	WIRE, 18AWG(19/30)IPVC 150V	A/R	A/R
46	46		9107410-89	A	WIRE, 18AWG(19/30)IPVC 150V	A/R	A/R
47	47		9107430-29	A	*** THIS ITEM IS NOT USED ***	-	-
48	48		9007775-00	A	STUD,BALL .250X0.447	1	1
49	49		9006020-01	A	SCREW,MACH PAN PHIL 5-	1	1
50	50		9008185-00	A	NUT,HEX EXT TOOTH LCKWSHR 6-32	56	56
51	51		9006634-00	A	WASHER,LOCK INTERNAL STEEL	3	3
52	52		9007080-00	A	CLAMP,CABLE,SCREW MTD. 3/16"	2	2
53	53		9006557-00	A	NUT,HEX EXT TOOTH LCKWSHR 4-40	4	4
54	54		9007046-00	A	GROMMET,STRIP POLYETHELENE	A/R	A/R
55	55		9007594-00	A	ADHESIVE,NEOPRENE	A/R	A/R
56	56		9107240-00	A	WRAP,CABLE,.2500D VINYL	A/R	A/R
57	57		9006653-00	A	WASHER,FLAT STEEL	1	1
58	58		9009321-00	A	LOCK TITE, SCREW LOCK, 10CC PER	A/R	A/R
59	59		9006669-00	A	WASHER,FLAT SST	4	4
60	60		1213071-02		INSULATOR,RUBBER SILICONE SM	4	4
61	61		9107714-00	A	TUBING,SHRINK .093ID EXP	A/R	A/R
62	62		1210930-02		FAN,TUBE AXIAL 4.5" 100CFM 230V	1	-
63	63		1215041-01	A	THERMOSTAT,O@220,C@260,SPST	2	2
64	64		7419817-00		BRKT THERMOSTAT MTG	1	1
65	65		7419817-01		BRKT THERMOSTAT MTG	1	1
66	66		9006332-08	A	SCREW,CAP SOC HEX 5-	2	2
67	67		1217916-02	A	FAN,TUBE AXIAL 4.5" 120CFM 230V	-	1

DIGITAL	TITLE	SECTION A OF A	SIZE	CODE	DOCUMENT NUMBER	REV
	REGULATED HEAT SINK ASSY -5.2V		K	PL	7009405-0-DBP	F

MRO

THIS DRAWING AND SPECIFICATIONS, HEREIN, ARE THE PROPERTY OF DIGITAL EQUIPMENT CORPORATION AND ARE NOT TO BE REPRODUCED OR USED IN WHOLE OR IN PART AS THE BASIS FOR THE MANUFACTURE OR SALE OF ITEMS WITHOUT PERMISSION.
COPYRIGHT © 1973 DIGITAL EQUIPMENT CORPORATION

NOTES:
1. ALL RESISTORS 1/4W 5% UNLESS OTHERWISE STATED.
2. ALL RESISTORS IN OHMS UNLESS OTHERWISE STATED.
3. SYMBOL - ☐ INDICATES NO. 8 AWG CONNECTION.
4. OUTPUT OF EACH REGULATOR IS -2.0 V MEASURED FROM -V.O. TO RTN. (SEE D-IC-H761-0-3).

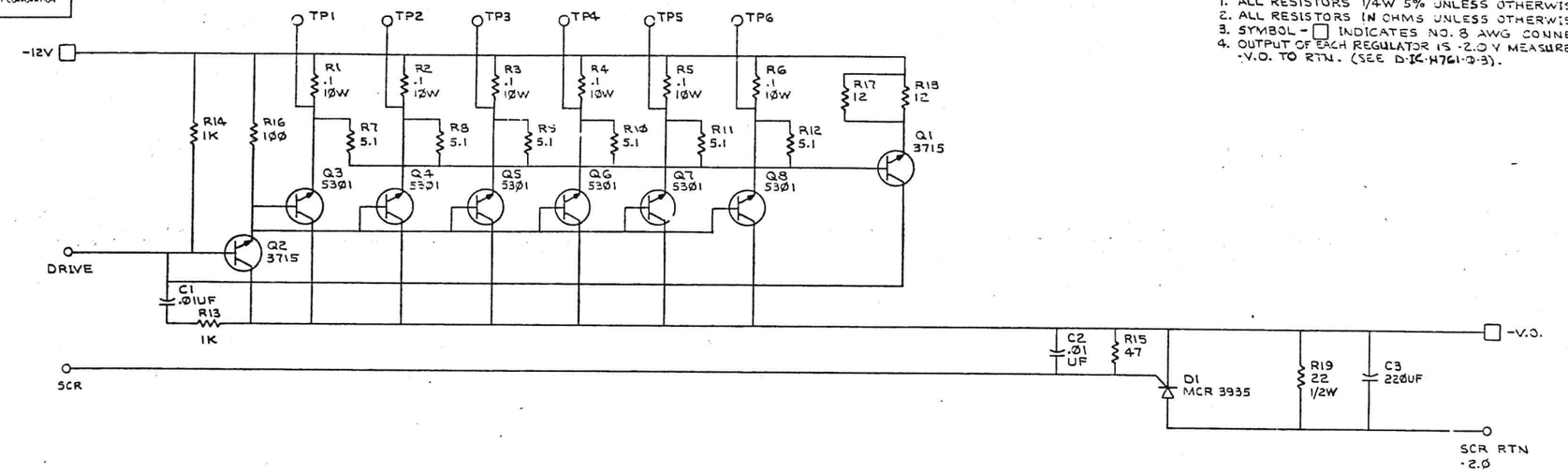

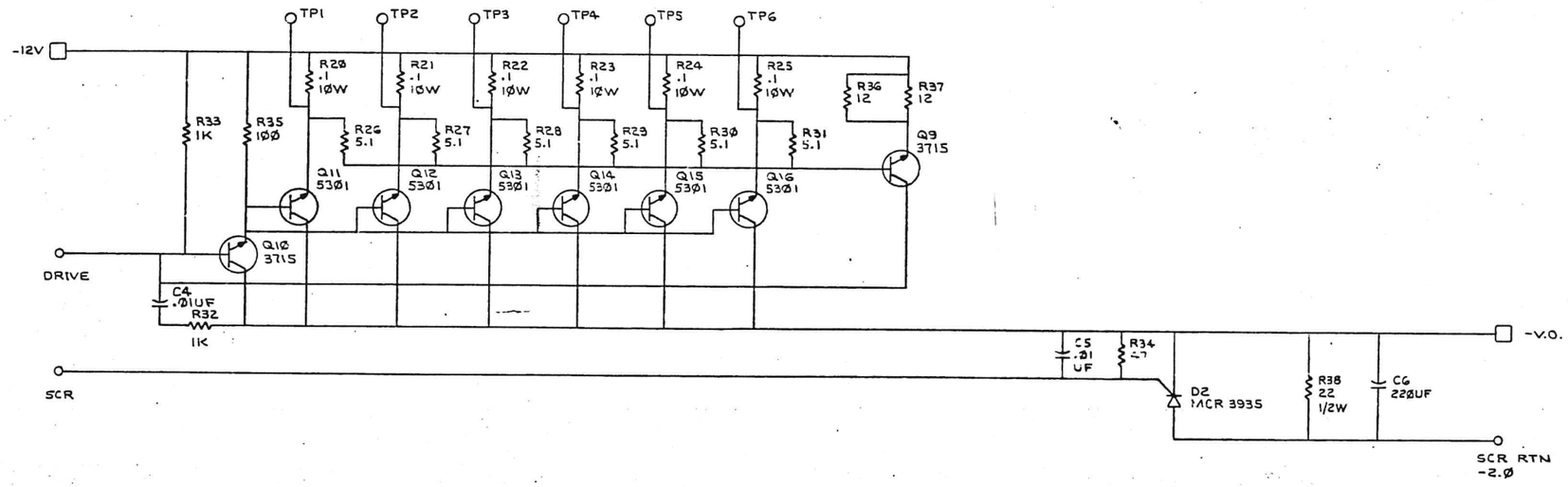

FIRST USED ON OPTION/MODEL	QTY.	DESCRIPTION	PART NO.	ITEM NO.
KL!Ø		PARTS LIST		

UNLESS OTHERWISE SPECIFIED DIMENSION IN INCHES
TOLERANCES
DECIMALS .xxx = .005 .xx = .02 .x = .1
ANGLES :0°30'
REMOVE BURRS AND BREAK SHARP CORNERS SURFACE QUALITY √

DRN. DATE
CHK'D DATE
ENG. DATE
PROJ. ENG. DATE
PSMC DATE

digital EQUIPMENT CORPORATION MAYNARD MASSACHUSETTS

TITLE
-2.0 V
HEAT SINK ASSY

MATERIAL
FINISH
NEXT HIGHER ASSY. H761
SCALE
SHEET 1 OF 1

SIZE D | CODE CS | NUMBER 7009404-0-1 | REV.
DIST.

DCS 7009404-0-1

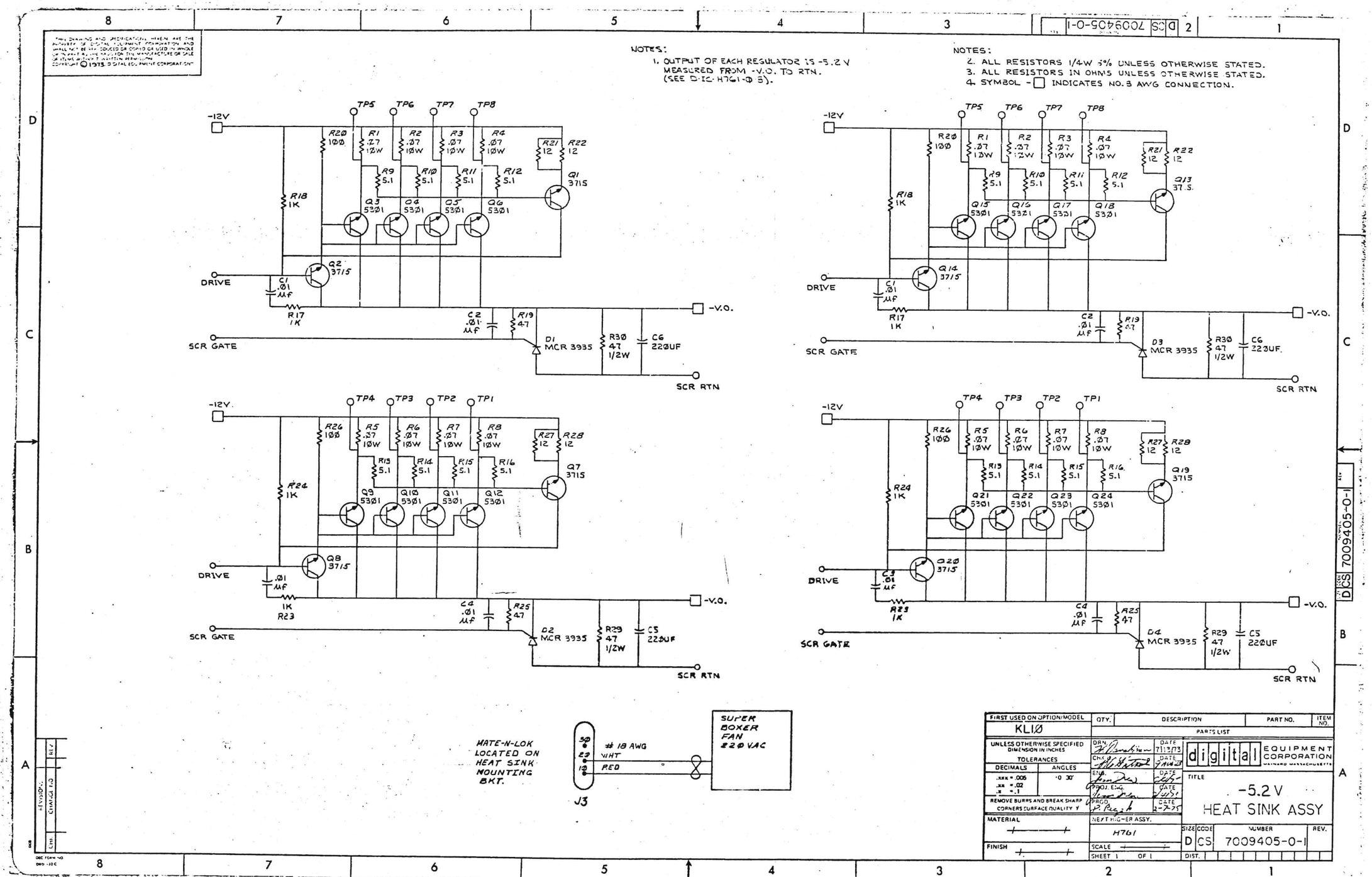

NOTES:
1. OUTPUT OF EACH REGULATOR IS -5.2 V MEASURED FROM -V.O. TO RTN. (SEE D-IC-H761-0-3).
NOTES:
2. ALL RESISTORS 1/4W 5% UNLESS OTHERWISE STATED.
3. ALL RESISTORS IN OHMS UNLESS OTHERWISE STATED.
4. SYMBOL -□ INDICATES NO. 3 AWG CONNECTION.
-12V
TP5 TP6 TP7 TP8
R20 100
R1 .07 10W
R2 .07 10W
R3 .07 10W
R4 .07 10W
R21 12
R22 12
R9 5.1
R10 5.1
R11 5.1
R12 5.1
Q1 3715
Q3 5301
Q4 5301
Q5 5301
Q6 5301
R18 1K
Q2 3715
DRIVE
C1 .01 µF
R17 1K
C2 .01 µF
R19 47
-V.O.
SCR GATE
D1 MCR 3935
R30 47 1/2W
C6 220UF
SCR RTN
Q13 3715
Q15 5301
Q16 5301
Q17 5301
Q18 5301
Q14 3715
D3 MCR 3935
TP4 TP3 TP2 TP1
R26 100
R5 .07 10W
R6 .07 10W
R7 .07 10W
R8 .07 10W
R27 12
R28 12
R13 5.1
R14 5.1
R15 5.1
R16 5.1
Q7 3715
R24 1K
Q9 5301
Q10 5301
Q11 5301
Q12 5301
Q8 3715
.01 µF
R23 1K
C4 .01 µF
R25 47
D2 MCR 3935
R29 47 1/2W
C5 220UF
Q19 3715
Q21 5301
Q22 5301
Q23 5301
Q24 5301
Q20 3715
C3 .01 µF
D4 MCR 3935
MATE-N-LOK LOCATED ON HEAT SINK MOUNTING BKT.
30
20
10
18 AWG
WHT
RED
J3
SUPER BOXER FAN 220 VAC
FIRST USED ON OPTION/MODEL
KL10
QTY.
DESCRIPTION
PART NO.
ITEM NO.
PARTS LIST
UNLESS OTHERWISE SPECIFIED DIMENSION IN INCHES
TOLERANCES
DECIMALS
ANGLES
.xxx = .005
.xx = .02
.x = .1
±0 30'
REMOVE BURRS AND BREAK SHARP CORNERS SURFACE QUALITY
DRN.
DATE 7/13/73
CHK.
ENG.
PROJ. ENG.
PROD.
DATE 2-7-75
digital EQUIPMENT CORPORATION
MAINARD MASSACHUSETTS
TITLE
-5.2 V
HEAT SINK ASSY
MATERIAL
NEXT HIGHER ASSY.
H761
FINISH
SCALE
SHEET 1 OF 1
SIZE D
CODE CS
NUMBER 7009405-0-1
REV.
DIST.
D CS 7009405-0-1

THIS DRAWING AND SPECIFICATIONS, HEREIN, ARE THE PROPERTY OF DIGITAL EQUIPMENT CORPORATION AND SHALL NOT BE REPRODUCED OR COPIED OR USED IN WHOLE OR IN PART AS THE BASIS FOR THE MANUFACTURE OR SALE OF ITEMS WITHOUT WRITTEN PERMISSION.
COPYRIGHT ©1974, DIGITAL EQUIPMENT CORPORATION

WIRE TABLE

ITEM NO.	DESCRIPTION AWG	COLOR	FROM POINT	FROM CONNECTION	FROM TERM	TO POINT	TO CONNECTION	TO TERM	FUNCTION	
15	18	VIO	69	P3-H1	SOLDER	1	P10-1	2 & 3		DRIVE
25	18	GRY/VIO	70	P3-H2	SOLDER	2	P10-2		-5.2 H	SCR GATE
8	14	BLK	42	——	4	3	P10-3			SCR RTN
16	18	GRY	71	P3-J1	SOLDER	4	P10-4			DRIVE
16	18	GRY/BLK	72	P3-J2	SOLDER	5	P10-5		-5.2 J	SCR GATE
8	14	BLK	41	——	4	6	P10-6			SCR RTN
13	18	GRN	65	P3-E1	SOLDER	7	P9-1			DRIVE
23	18	GRY/GRN	66	P3-E2	SOLDER	8	P9-2		-5.2 E	SCR GATE
8	14	BLK	44	——	4	9	P9-3			SCR RTN
14	18	BLU	67	P3-F1	SOLDER	10	P9-4			DRIVE
24	18	GRY/BLU	68	P3-F2	SOLDER	11	P9-5		-5.2 F	SCR GATE
8	14	BLK	43	——	4	12	P9-6			SCR RTN
11	18	ORN	61	P3-C1	SOLDER	13	P8-1			DRIVE
21	18	GRY/ORN	62	P3-C2	SOLDER	14	P8-2		-5.2 C	SCR GATE
8	14	BLK	34	——	4	15	P8-3			SCR RTN
12	18	YEL	63	P3-D1	SOLDER	16	P8-4			DRIVE
22	18	GRY/YEL	64	P3-D2	SOLDER	17	P8-5		-5.2 D	SCR GATE
8	14	BLK	32	——	4	18	P8-6	2 & 3		SCR RTN

WIRE TABLE

ITEM NO.	DESCRIPTION AWG	COLOR	FROM POINT	FROM CONNECTION	FROM TERM	TO POINT	TO CONNECTION	TO TERM	FUNCTION	
9	18	BRN	57	P3-A1	SOLDER	19	P7-1	2 & 3		DRIVE
19	18	GRY/BRN	58	P3-A2	SOLDER	20	P7-2		-5.2 A	SCR GATE
8	14	BLK	31	——	4	21	P7-3			SCR RTN
10	18	RED	59	P3-B1	SOLDER	22	P7-4			DRIVE
20	18	GRY/RD	60	P3-B2	SOLDER	23	P7-5		-5.2 B	SCR GATE
8	14	BLK	33	——	4	24	P7-6			SCR RTN
17	18	WHT	73	P3-K1	SOLDER	45	P12-1			DRIVE
26	18	GRY/WHT	74	P3-K2	SOLDER	46	P12-2		-5.2 K	SCR GATE
8	14	BLK	35	——	4	47	P12-3			SCR RTN
25	18	GRY/VIO	75	P3-L1	SOLDER	48	P11-1			DRIVE
15	18	VIO	76	P3-L2	SOLDER	49	P11-2		-5.2 L	SCR GATE
8	14	BLK	36	——	4	50	P11-3			SCR RTN
19	18	GRY/BRN	77	P3-M1	SOLDER	25	P13-1			DRIVE
9	18	BRN	78	P3-M2	SOLDER	26	P13-2		-2.0 A	SCR GATE
8	14	BLK	37	——	4	27	P13-3			SCR RTN
20	18	GRY/RED	79	P3-N1	SOLDER	28	P14-1			DRIVE
10	18	RED	80	P3-N2	SOLDER	29	P14-2		-2.0 B	SCR GATE
8	14	BLK	38	——	4	30	P14-3			SCR RTN
21	18	GRY/ORN	81	P3-D1	SOLDER	51	P15-1			DRIVE
11	18	ORN	82	P3-D2	SOLDER	52	P15-2		-2.0 C	SCR GATE
8	14	BLK	39	——	4	53	P15-3			SCR RTN
22	18	GRY/YEL	83	P3-R1	SOLDER	54	P16-1			DRIVE
12	18	YEL	84	P3-R2	SOLDER	55	P16-2		-2.0 D	SCR GATE
8	14	BLK	40	——	4	56	P16-3	2 & 3		SCR RTN

NOTES:
1. USE "TIE WRAPS" (ITEM #7) APPROXIMATELY EVERY THREE INCHES WHEN NECESSARY, AND AT EVERY BREAKOUT POINT. "X" REPRESENTS TIE WRAP
2. LABEL ALL CUT LINES WITH POINT DESIGNATIONS SHOWN, USING BRADY MARKERS.

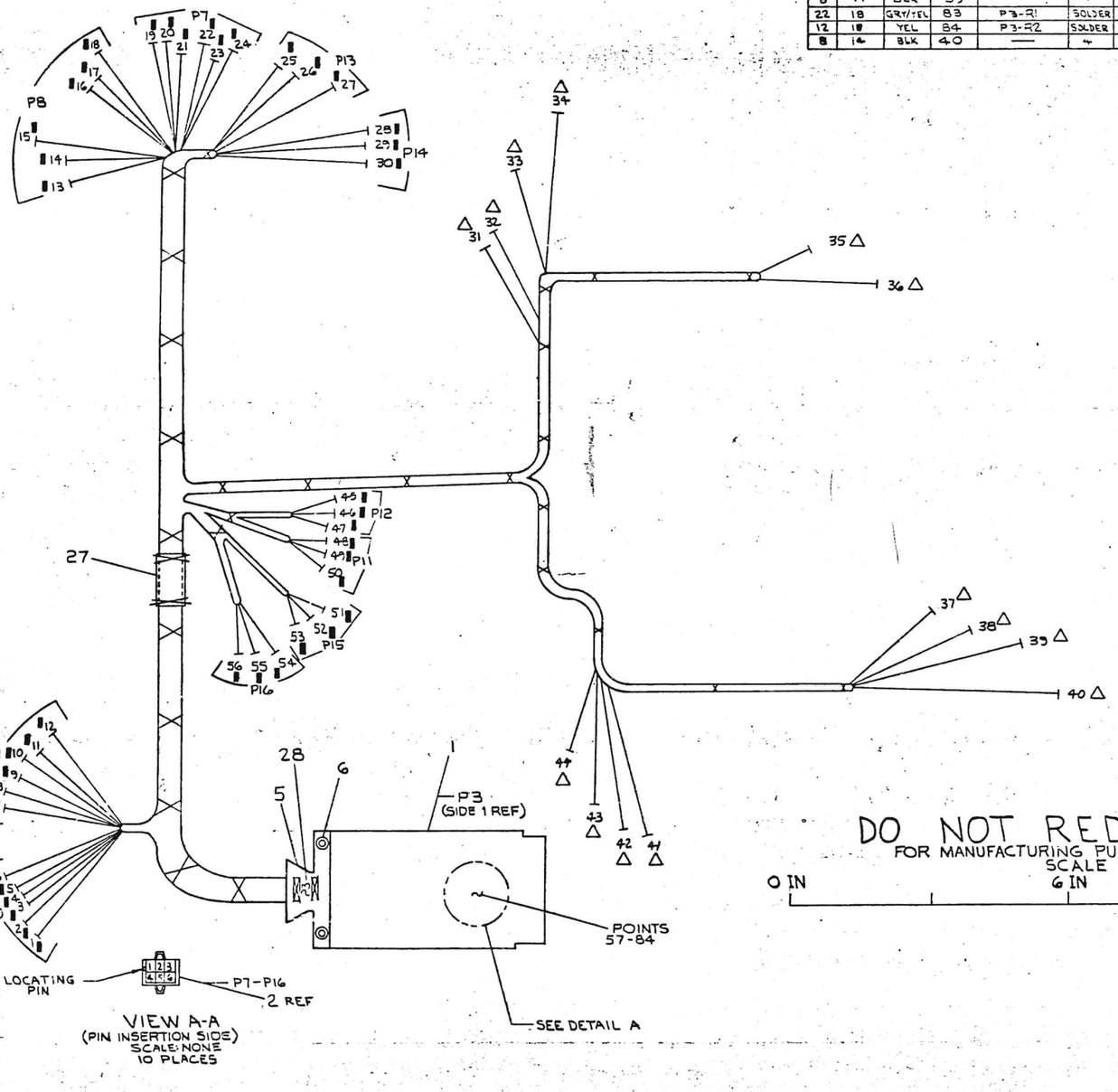

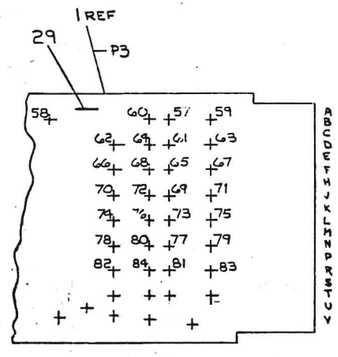

DETAIL A
SCALE: 2/1

DO NOT REDUCE
FOR MANUFACTURING PURPOSES ONLY
SCALE
0 IN 6 IN 12 IN

	1	JUMPER	9009185	29
	1	DECAL	12074098-00	28
	1	LABEL, CABLE, I.D.	9009532	27
	2 FT	WIRE, 18 AWG, TPVC, GRY/WHT	9107410-89	26
	3 FT	WIRE, 18 AWG, TPVC, GRY/VIO	9107410-87	25
	1 FT	WIRE, 18 AWG, TPVC, GRY/BLU	9107410-86	24
	1 FT	WIRE, 18 AWG, TPVC, GRY/GRN	9107410-85	23
	4 FT	WIRE, 18 AWG, TPVC, GRY/YEL	9107410-84	22
	4 FT	WIRE, 18 AWG, TPVC, GRY/ORN	9107410-83	21
	5 FT	WIRE, 18 AWG, TPVC, GRY/RED	9107410-82	20
	5 FT	WIRE, 18 AWG, TPVC, GRY/BRN	9107410-81	19
	1 FT	WIRE, 18 AWG, TPVC, GRY/BLK	9107410-80	18
	2 FT	WIRE, 18 AWG, TPVC, WHT	9107360-99	17
	1 FT	WIRE, 18 AWG, TPVC, GRY	9107360-88	16
	3 FT	WIRE, 18 AWG, TPVC, VIO	9107360-77	15
	1 FT	WIRE, 18 AWG, TPVC, BLU	9107360-66	14
	1 FT	WIRE, 18 AWG, TPVC, GRN	9107360-55	13
	4 FT	WIRE, 18 AWG, TPVC, YEL	9107360-44	12
	4 FT	WIRE, 18 AWG, TPVC, ORN	9107360-33	11
	5 FT	WIRE, 18 AWG, TPVC, RED	9107360-22	10
	5 FT	WIRE, 18 AWG, TPVC, BRN	9107360-11	9
	32 FT	WIRE, 14 AWG, TPVC, BLK	9107370-00	8
	31	TIE, CABLE 3.75L6.09W	9007031	7
	2	EYELET	9006741	6
	1	CLAMP, CABLE	12027-90	5
△	14	CONN, SOLDERLESS	9007928	4
▮	42	PIN, TERMINAL CONT	12093738-00	3
	10	CONN HOUSING, 6 PIN	12083511-06	2
	1	CABLE TRK CONN 30 MSS	M3135	1

FIRST USED ON OPTION/MODEL	SYM	QTY.	DESCRIPTION	PART NO.	ITEM NO.
KL10			PARTS LIST		

DIMENSIONAL TOLERANCE
DIMENSIONS ARE IN INCHES
UNLESS OTHERWISE SPECIFIED
FRACT ±1/64 XX ±.03 X ±.1 ANGLES ±1°
THIRD ANGLE PROJECTION
REMOVE BURRS AND BREAK SHARP
MATERIAL

DRAWN DATE 8/10/74
CHK'D DATE 8/13/74
ENG DATE 10/17/74
PROJ. ENGR. DATE 8/23/74
PROJ. DATE 8/27/74
NEXT HIGHER ASSY.

digital

TITLE
HARNESS
DRIVE, SCR & SCR RTN

SIZE CODE NUMBER REV.
B 7009145-0-0 A

CHANGE NO. REVISIONS

"THIS DRAWING AND SPECIFICATIONS, HEREIN, ARE THE PROPERTY OF DIGITAL EQUIPMENT CORPORATION AND SHALL NOT BE REPRODUCED OR COPIED OR USED IN WHOLE OR IN PART AS THE BASIS FOR THE MANUFACTURE OR SALE OF ITEMS WITHOUT WRITTEN PERMISSION.
COPYRIGHT © 1976 DIGITAL EQUIPMENT CORPORATION"

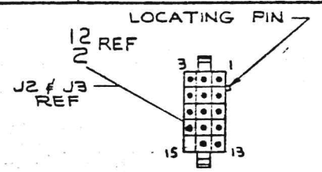

VIEW A-A
(SOCKET INSERTION SIDE)
SCALE : NONE

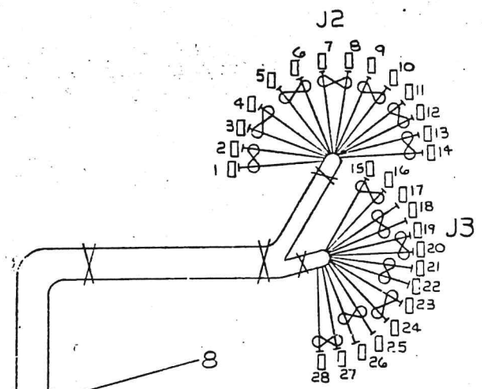

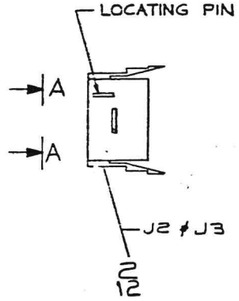

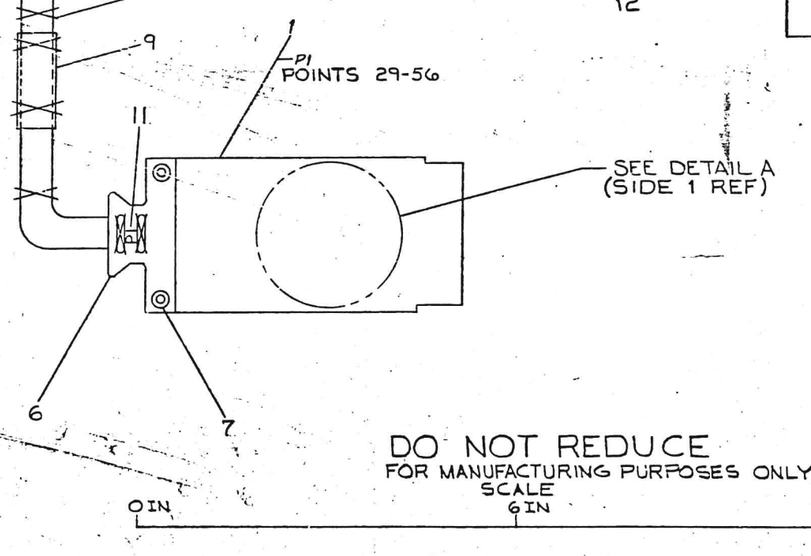

DO NOT REDUCE
FOR MANUFACTURING PURPOSES ONLY
SCALE
0 IN
6 IN
12 IN

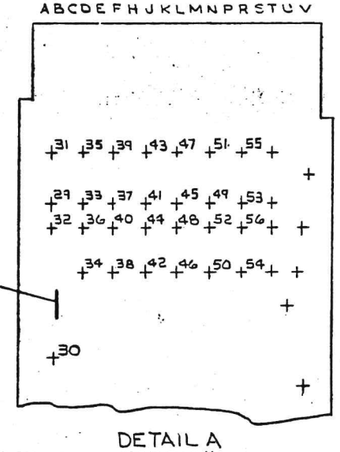

DETAIL A
SCALE: 2/1
ROTATED 90°
COUNTER CLOCK WISE

WIRE TABLE

ITEM NO.	DESCRIPTION AWG	COLOR	FROM POINT	FROM CONNECTION	FROM TERM	TO POINT	TO CONNECTION	TO TERM	WIRE LENGTH	FUNCTION	
4	18 TWP	BLK	1	J2-1	2-3	29	P1-A1	SOLDER	19.0"	-5.2A	+ SENSE
		BLU	2	J2-2		30	-A2				- SENSE
4		BLK	3	J2-3		31	-B1		19.5"	-5.2B	+ SENSE
		BLU	4	J2-4		32	-B2				- SENSE
4		BLK	5	J2-5		33	-C1		19.0"	-5.2C	+ SENSE
		BLU	6	J2-6		34	-C2				- SENSE
4		BLK	7	J2-7		35	-D1		19.5"	-5.2D	+ SENSE
		BLU	8	J2-8		36	-D2				- SENSE
4		BLK	9	J2-9		37	-E1		18.5"	-5.2E	+ SENSE
		BLU	10	J2-10		38	-E2				- SENSE
4		BLK	11	J2-11		39	-F1		19.0"	-5.2F	+ SENSE
		BLU	12	J2-12		40	-F2				- SENSE
4		BLK	13	J2-13		41	-H1		18.5"	-5.2H	+ SENSE
		BLU	14	J2-14		42	-H2				- SENSE
4		BLK	15	J3-1		43	-J1		19.0"	-5.2J	+ SENSE
		BLU	16	J3-2		44	-J2				- SENSE
4		BLK	17	J3-3		45	-K1		18.0"	-5.2K	+ SENSE
		BLU	18	J3-4		46	-K2				- SENSE
4		BLK	19	J3-5		47	-L1		18.5"	-5.2L	+ SENSE
		BLU	20	J3-6		48	-L2				- SENSE
5		BLK	21	J3-7		99	-M1		18.0"	-2.0A	+ SENSE
		GRN	22	J3-8		50	-M2				- SENSE
5		BLK	23	J3-9		51	-N1		18.5"	-2.0B	+ SENSE
		GRN	24	J3-10		52	-N2				- SENSE
5		BLK	25	J3-11		53	-P1		18.0"	-2.0C	+ SENSE
		GRN	26	J3-12		54	-P2				- SENSE
5	18 TWP	BLK	27	J3-13		55	-R1		18.5"	-2.0D	+ SENSE
		GRN	28	J3-14	2-3	56	P1-R2	SOLDER			- SENSE

NOTES:
1. USE "TIE WRAPS" (ITEM #8) APPROXIMATELY EVERY THREE INCHES WHEN NECESSARY AND AT EVERY BREAKOUT POINT. "X" REPRESENTS TIE WRAPS.
2. CONNECTORS J2 & J3 ARE TO BE LABELED WITH COMPONENT IDENTIFIERS. USING ITEM #12

	QTY.	DESCRIPTION	PART NO.	ITEM NO.
	1	DECAL	A-DC-7409873-1-0	13
	1	DECAL	A-DC-7409872-0-0	11
	1	JUMPER	9009185	10
	1	LABEL, CABLE, I.D.	9009532	9
	10	TIE, CABLE 3.75LG×.09W	9007031	8
	2	EYELET	9006791	7
	1	CLAMP, CABLE	1202790	6
	7FT	WIRE, #18 AWG TWP, BLK/GRN	9107430-05	5
	13FT	WIRE, #18 AWG TWP, BLK/BLU	9107430-06	4
	28	SOCKET, TERMINAL CONTACT	1209379-00	3
	2	CONN. HOUSING, 15 SKT	1209350-15	2
	1	CABLE TRACK CONN. BOARD M9DS	M9DS	1

PARTS LIST
FIRST USED ON OPTION/MODEL: KLIØ
SYM

DIMENSIONAL TOLERANCE
DIMENSIONS ARE INCHES UNLESS OTHERWISE SPECIFIED
MILLIMETERS: XXX ±0.10, XX ±0.5, X ±2 — INCHES: XXX ±.005, XX ±.02, X ±.1 — ANGLES ±0° 30'
THIRD ANGLE PROJECTION
REMOVE BURRS AND BREAK SHARP
CORNERS/SURFACE QUALITY ✓
MATERIAL: SEE PARTS LIST
FINISH

DRN. — DATE 2/3/76
CHK D. — DATE
ENG. — DATE 10/9/74
PROJ. ENG. — DATE 7/1/76
PROD. — DATE 10/1/76
NEXT HIGHER ASSY.
E-UA-H761-0-0
SCALE 1/1
SHEET 1 OF 1

digital
TITLE: HARNESS, SENSE
SIZE D | CODE DIA | NUMBER 7009546-0-0 | REV.
DIST.

REVISIONS: REV. | CHANGE NO. | CHK

DRAWING 7009546-0-0 REV. A
USED ON DIA

THESE DRAWINGS AND SPECIFICATIONS, HEREIN, ARE THE PROPERTY OF DIGITAL EQUIPMENT CORPORATION AND SHALL NOT BE REPRODUCED OR COPIED OR USED IN WHOLE OR IN PART AS THE BASIS FOR THE MANUFACTURE OR SALE OF ITEMS WITHOUT WRITTEN PERMISSION.
COPYRIGHT © 1976, DIGITAL EQUIPMENT CORPORATION

WIRE TABLE

ITEM NO.	DESCRIPTION AWG	COLOR	FROM POINT	FROM CONNECTION	FROM TERM	TO POINT	TO CONNECTION	TO TERM	WIRE LENGTH		FUNCTION
5	18 TWP	BLK	1	P2-A1	1	55	—	2		+	-5.2A
		BLU	2	P2-A2	1	56	—	2		−	OPEN SENSE
5	18 TWP	BLK	3	P2-B1	1	53	—	2		+	-5.2B
		BLU	4	P2-B2	1	54	—	2		−	OPEN SENSE
5	18 TWP	BLK	5	P2-C1	1	50	—	2		+	-5.2C
		BLU	6	P2-C2	1	49	—	2		−	OPEN SENSE
5	18 TWP	BLK	7	P2-D1	1	52	—	2		+	-5.2D
		BLU	8	P2-D2	1	51	—	2		−	OPEN SENSE
5	18 TWP	BLK	9	P2-E1	1	30	—	2		+	-5.2E
		BLU	10	P2-E2	1	29	—	2		−	OPEN SENSE
5	18 TWP	BLK	11	P2-F1	1	31	—	2		+	-5.2F
		BLU	12	P2-F2	1	32	—	2		−	OPEN SENSE
5	18 TWP	BLK	13	P2-H1	1	33	—	2		+	-5.2H
		BLU	14	P2-H2	1	34	—	2		−	OPEN SENSE

WIRE TABLE

ITEM NO.	DESCRIPTION AWG	COLOR	FROM POINT	FROM CONNECT ON	FROM TERM	TO POINT	TO CONNECTION	TO TERM	WIRE LENGTH		FUNCTION
5	18 TWP	BLK	15	P2 -J1	1	35	—	2		+	-5.2J
		BLU	16	P2 -J2	1	36	—	2		−	OPEN SENSE
5	18 TWP	BLU	18	P2 -K2	1	46	—	2		−	-5.2K
		BLK	17	P2 -K1	1	45	—	2		+	OPEN SENSE
5	18 TWP	BLK	19	P2 -L1	1	48	—	2		+	-5.2L
		BLU	20	P2 -L2	1	47	—	2		−	OPEN SENSE
4	18 TWP	GRN	24	P2 -N2	1	42	—	2		−	-2.0B
		BLK	23	P2 -N1	1	41	—	2		+	OPEN SENSE
4	18 TWP	BLK	21	P2 -M1	1	43	—	2		+	-2.0A
		GRN	22	P2 -M2	1	44	—	2		−	OPEN SENSE
4	18 TWP	BLK	25	P2 -P1	1	40	—	2		+	-2.0C
		GRN	26	P2 -P2	1	39	—	2		−	OPEN SENSE
4	18 TWP	BLK	27	P2 -R1	1	38	—	2		+	-2.0D
		GRN	28	P2 -R2	1	37	—	2		−	OPEN SENSE

NOTES:
1. USE "TIE WRAPS" (ITEM #3) APPROXIMATELY EVERY THREE INCHES WHEN NECESSARY, AND AT EVERY BREAKOUT POINT. "X" REPRESENTS TIE WRAPS.
2. ALL CABLE BREAKOUT WIRES SHALL BE LABELED WITH BRADY MARKERS.

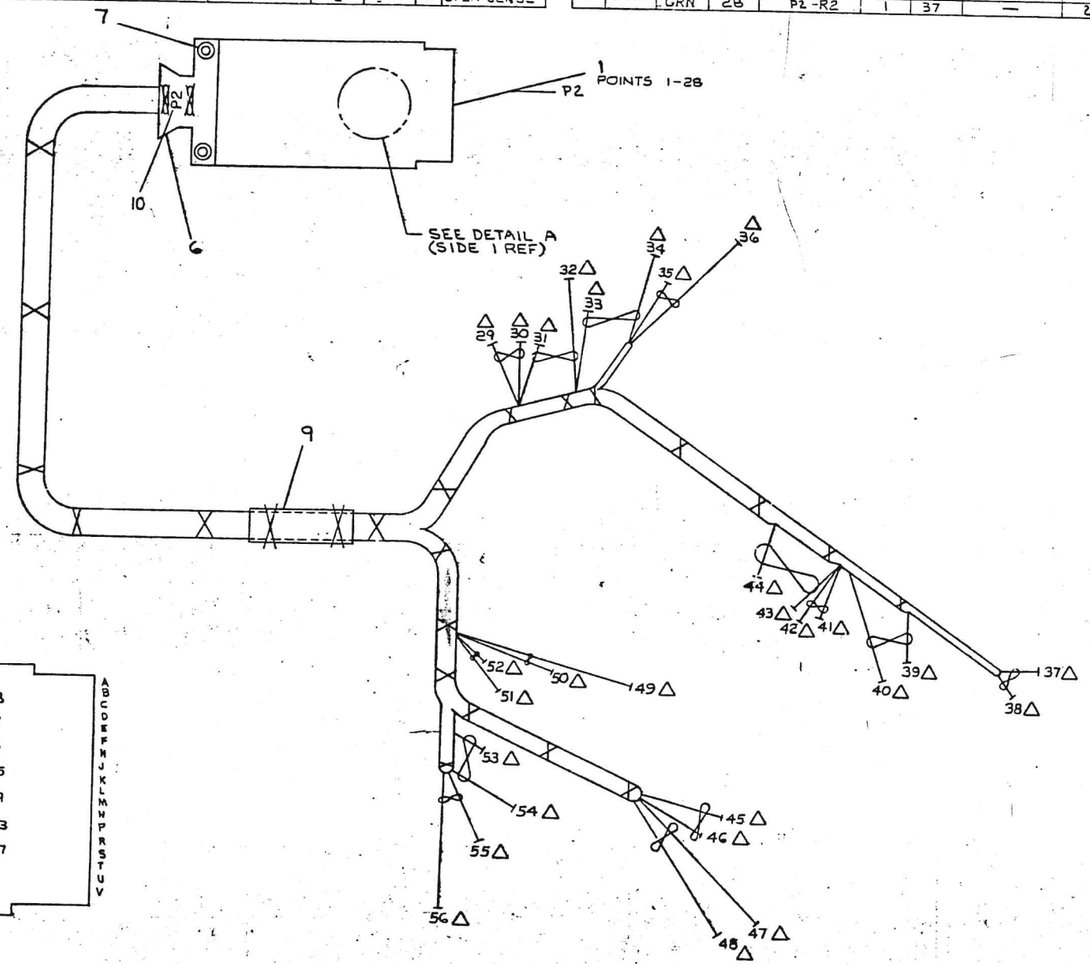

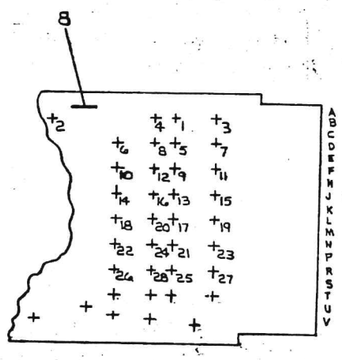

DETAIL A
SCALE: 2/1

DO NOT REDUCE
FOR MANUFACTURING PURPOSES ONLY
SCALE
0 IN 6 IN 12 IN

	1	DECAL	A-DC-7100987200-0	10
	1	LABEL, CABLE, I.D.	90009532	9
	1	JUMPER	90009185	8
	2	EYELET	9005741	7
	1	CLAMP, CABLE	12-27790-00	6
	28FT	WIRE, #18 AWG TWP, BLK, BLU	9107430-06	5
	12FT	WIRE, #18 AWG TWP, BLK, GRN	9107430-05	4
	25	TIE, CABLE 3.75LG×.09W	9007031	3
△	28	CONN, SOLDERLESS	9027930-001	2
	1	CABLE TRACK CONN BOARD M933	7933	1

FIRST USED ON	NEXT ASSY	QTY.	DESCRIPTION	PART NO.	ITEM NO.
KLIØ			PARTS LIST		

DIMENSIONAL TOLERANCE
DIMENSIONS ARE IN INCHES
UNLESS OTHERWISE SPECIFIED
FRACTIONS ± | DECIMALS XX ± .03, XXX ± .010 | ANGLES ± 30'

DRAWN J. Eston 3-27-75
CHECKED
ENGR
PROJ. ENGR
PROD. ENGR

digital

TITLE: HARNESS, OPEN SENSE

SIZE A | 7009547-0-0 | REV A

TRACINGS
ISSUED 3-27-75
CAGE NO. 27-00001

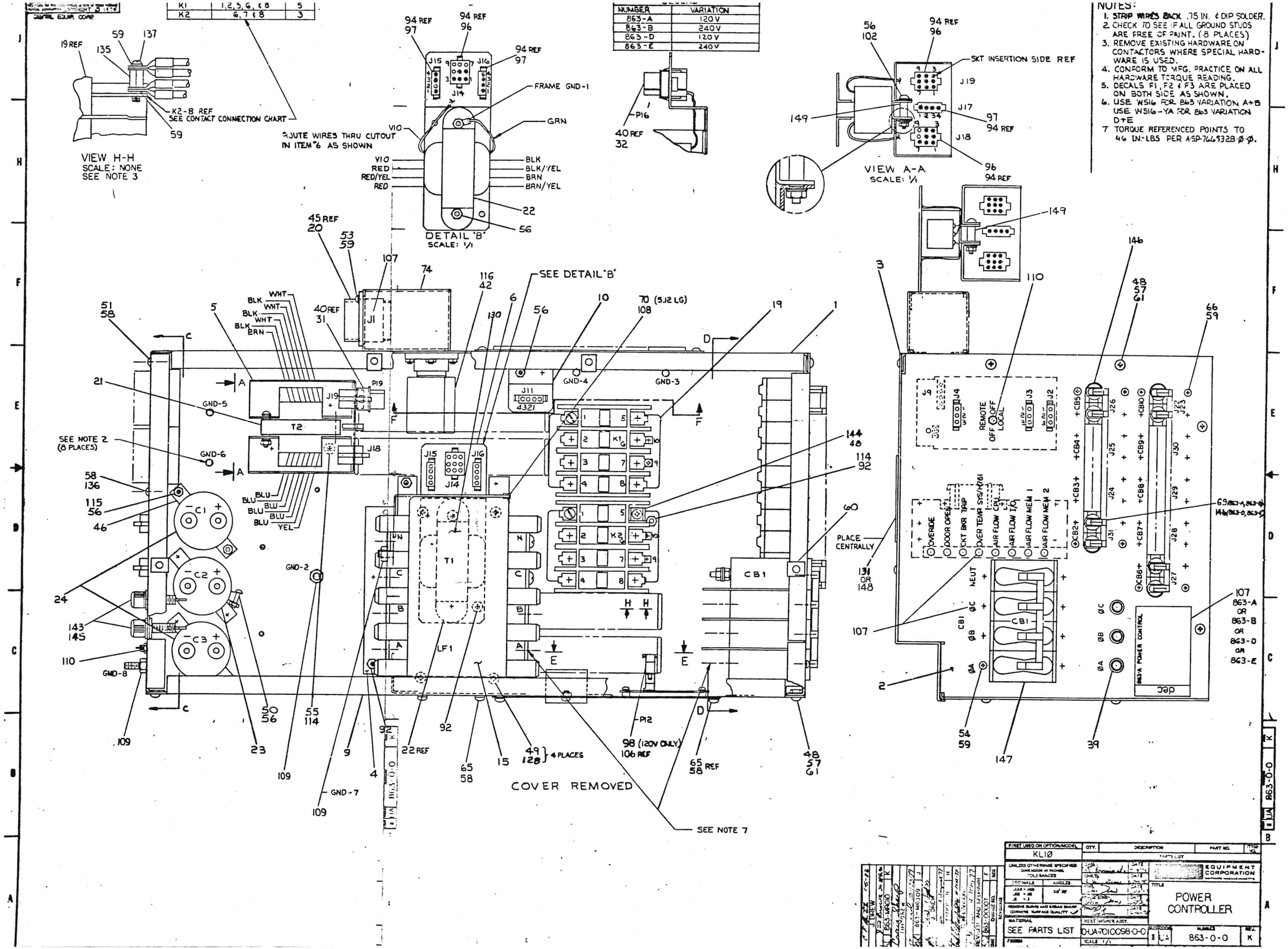

K1 1,2,3,6,&8 5
K2 6,7&8 3
NUMBER VARIATION
863-A 120V
863-B 240V
863-D 120V
863-E 240V
NOTES:
1. STRIP WIRES BACK .75 IN. & DIP SOLDER.
2. CHECK TO SEE IF ALL GROUND STUDS ARE FREE OF PAINT. (8 PLACES)
3. REMOVE EXISTING HARDWARE ON CONTACTORS WHERE SPECIAL HARDWARE IS USED.
4. CONFORM TO MFG. PRACTICE ON ALL HARDWARE TORQUE READING.
5. DECALS F1, F2 & F3 ARE PLACED ON BOTH SIDE AS SHOWN.
6. USE WS16 FOR 863 VARIATION A+B USE WS16-YA FOR 863 VARIATION D+E
7 TORQUE REFERENCED POINTS TO 46 IN-LBS PER ASP-7665328-Ø-Ø.
VIEW H-H
SCALE: NONE
SEE NOTE 3
K2-8 REF
SEE CONTACT CONNECTION CHART
ROUTE WIRES THRU CUTOUT IN ITEM 6 AS SHOWN
FRAME GND-1
GRN
DETAIL 'B'
SCALE: 1/1
SKT INSERTION SIDE REF
VIEW A-A
SCALE: 1/1
SEE DETAIL 'B'
SEE NOTE 2 (8 PLACES)
PLACE CENTRALLY
COVER REMOVED
SEE NOTE 7
4 PLACES
98 (120V ONLY)
106 REF
863-A OR 863-B OR 863-D OR 863-E
863-A POWER CONTROL
REMOTE OFF LOCAL
OVERIDE
DOOR OPEN
CKT BKR TRIP
OVER TEMP SYS/H761
AIR FLOW CPU
AIR FLOW T/O
AIR FLOW MEM 1
AIR FLOW MEM 2
KL1Ø
EQUIPMENT CORPORATION
POWER CONTROLLER
SEE PARTS LIST
D-UA-7010CS8-0-0
863-0-0
K

PROPRIETARY NOTICE
PROPERTY OF TOKYO ELECTRIC CORPORATION, NO DATA, SEE OF INFORMATION CONTAINED IN THIS DRAWING OR ANY PART THEREOF MAY BE MADE OR USED FOR THE MANUFACTURE OR SALE OF TOKYO ELECTRIC CORPORATION PRODUCTS.
COPYRIGHT © 1978 TOKYO ELECTRIC CORPORATION

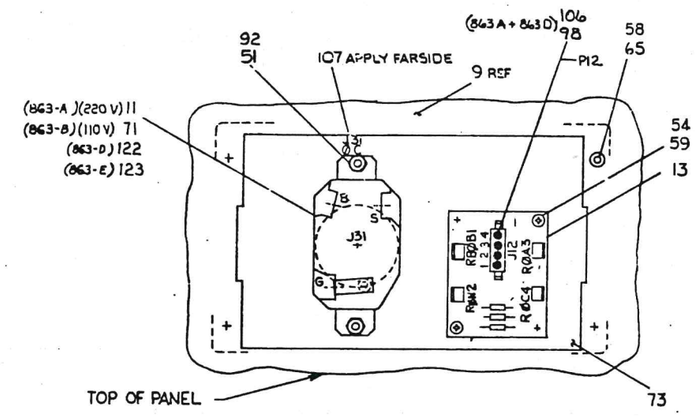

VIEW E-E

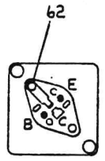

REAR VIEW
OF TRANSISTOR
HEAT SINK

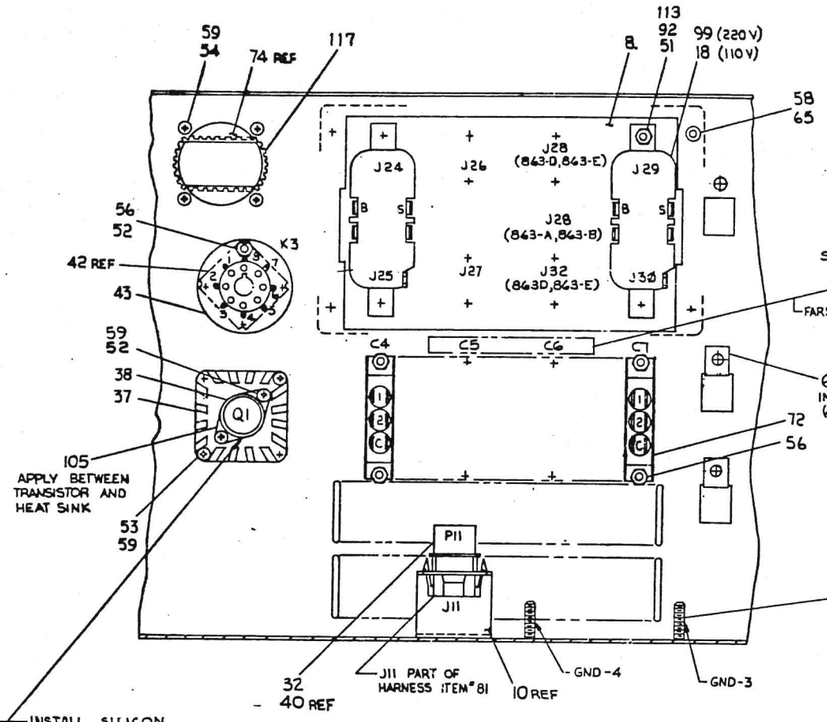

SECTION F-F

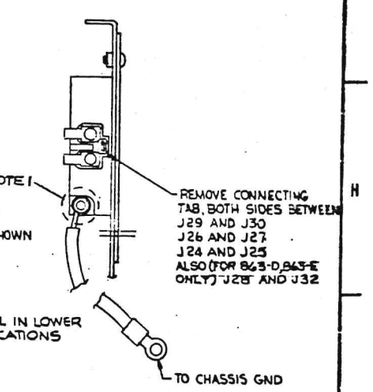

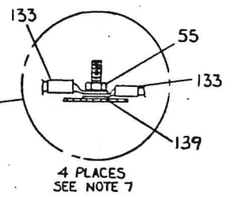

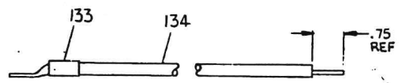

CHASSIS GROUND CABLE
SCALE: NONE
SEE NOTE 1

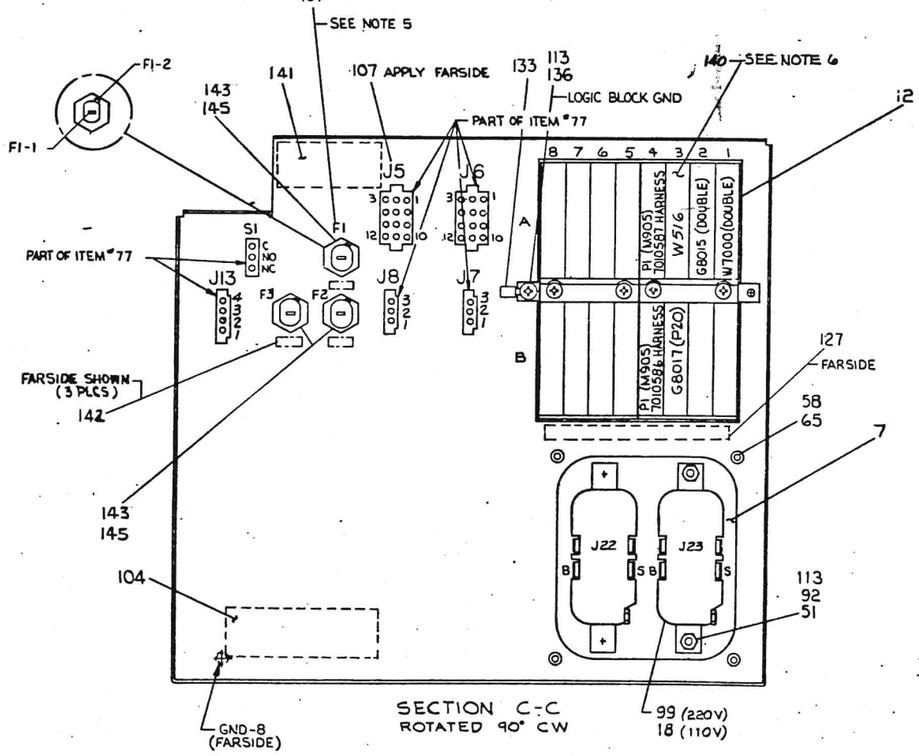

SECTION C-C
ROTATED 90° CW

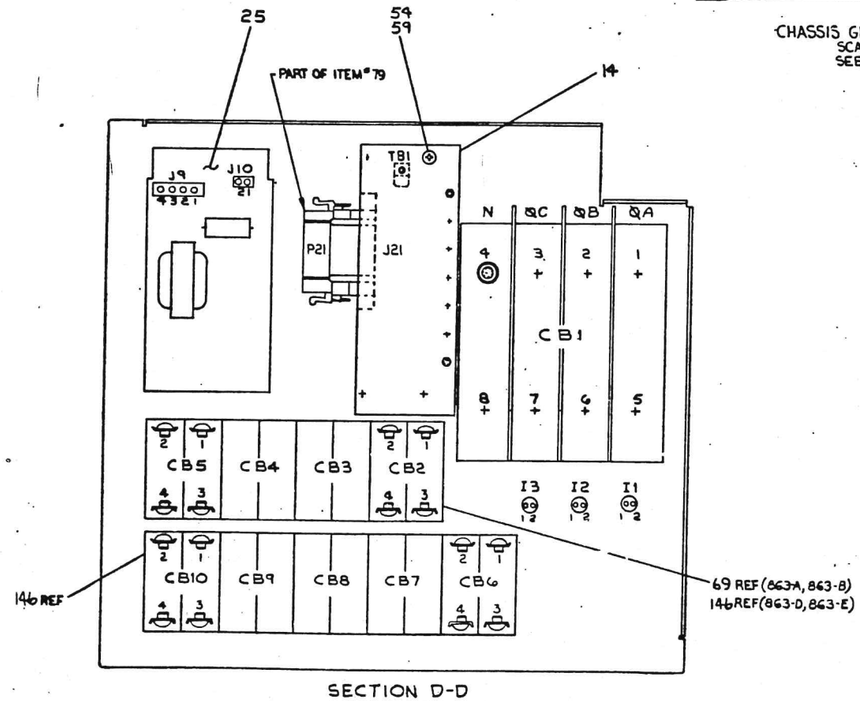

SECTION D-D
ROTATED 90° CCW

REVISIONS		
ZONE	CHANGE NO.	REV.

TITLE	SIZE/CODE	NUMBER	REV.
POWER CONTROLLER	E UA	863-0-0	K

863-0-0

WIRE TABLE

ITEM NO	DESCRIPTION AWG	COLOR	FROM POINT	FROM CONNECTION	FROM TERM	TO POINT	TO CONNECTION	TO TERM	REMARKS
75	14 TWP	WHT	1	HARNESS	—	—	CB18-2	—	
		BLK	2		—	—	CB18-1	—	
		WHT	3		—	—	CB9-2	—	
		RED	4		—	—	CB9-1	—	
		WHT	5		—	—	CB8-2	—	
		RED	6		—	—	CB8-1	—	
		WHT	7		—	—	CB7-2	—	
		RED	8		—	—	CB7-1	—	
		WHT	9		—	—	CB6-2	—	
		RED	10		—	—	CB6-1	—	
		WHT	11		—	—	CB1-8	—	
		BLK	12		—	—	CB1-7	—	
		RED	13		—	—	K2-8	—	
		RED	14		—	—	K2-7	—	
		RED	15		—	—		—	
		RED	16		—	—	K2-6	—	
		WHT	17		—	—	K2-5	—	
		WHT	18		—	—		—	
		WHT	19		—	—		—	
75		WHT	20	HARNESS	—	—		—	
75/136		WHT	1	HARNESS	—	—	CB8-4	—	
		RED	2		—	—	CB9-3	—	
		WHT	3		—	—	CB8-4	—	
		RED	4		—	—	CB8-3	—	
		WHT	5		—	—	CB7-4	—	
		RED	6		—	—	CB7-3	—	
		WHT	7		—	—	CB6-4	—	
		RED	8		—	—	CB6-3	—	
		WHT	9		—	—	CB5-4	—	
		RED	10		—	—	CB5-3	—	
		WHT	11		—	—	CB4-4	—	
		RED	12		—	—	CB4-3	—	
		WHT	13		—	—	CB3-4	—	
		RED	14		—	—	CB3-3	—	
		WHT	27		—	—	J30-3	—	
		RED	28		—	—	J30-4	—	
		WHT	25		—	—	J29-5	—	
		RED	26		—	—	J29-6	—	
		WHT	23		—	—	J29-5	—	
		RED	24		—	—	J29-6	—	
		WHT	21		—	—	J27-5	—	
		RED	22		—	—	J27-6	—	
		WHT	10		—	—	J29-3	—	
		RED	28		—	—	J29-6	—	
		WHT	17		—	—	J25-5	—	
		RED	18		—	—	J25-6	—	
	14 TWP	WHT	15		—	—	J24-5	—	
75/136		RED	16	HARNESS	—	—	J24-6	—	
98	—	—	—	HARNESS	P1	—	AB4 (ITEM #12)	—	
	22	RED	25		—	—	TB1	—	
	18	YEL	29		—	—	C1+	—	
	—	—	—		P14	—	J14	—	
	22	BLU	30		—	—	C1—	—	
	22	RED	29		—	—	C2+	—	
	—	—	—		P19	—	J18	—	
	22	RED	27		—	—	C2+	—	
	22	ORG	31		—	—	C3+	—	
	22	ORG	44		—	—	Q1-E	—	SOLDER
	22	ORG	45		—	—		—	
	22	BRN	47		—	—	Q1-C	—	
	22	BRN	48		—	—		—	
	22	RED	46		—	—	Q1-B	—	SOLDER
98	18	YEL	29	HARNESS	—	—	C3-	—	
81	14	BLK	1	HARNESS	—	—	K1-4	—	
	—	—	—		P15	—	J15	—	
	14	RED	2		—	—	K1-3	—	
	14	BLU	3		—	—	K1-2	—	
	18	BLU	4		—	—		—	
	18	WHT	5		—	—	K1-1	—	
	18	WHT	8		—	—		—	
	—	—	—		P17	—	J17	—	
	18	BLU	18		—	—	K3-8	—	SOLDER+116
	18	BLU	20		—	—	K3-7	—	SOLDER+116
	18	BLU	21		—	—	K3-6	—	SOLDER+116
	18	BLU	27		—	—	K2-18	—	
	18	RED	25		—	—	K1-3	—	
	18	RED	26		—	—	K2-9	—	
	—	—	—		J11	—	ITEM #18(SEE SHEET 1)	—	
	—	—	—		J8	—	ITEM #25(SEE SHEET 2)	—	
	18	BLU	18		—	—	K3-2	—	SOLDER+116
	18	BLU	30		—	—	K1-18	—	
	15	BLU	31		—	—		—	
	18	RED	29		—	—	K1-8	—	
	18	RED	29		—	—		—	
	14	BLK	6A		—	—	F1-2	—	SOLDER
	18	BLK	6B		—	—	F1-1	—	
	14	RED	6C		—	—	F2-2	—	
	18	RED	6D		—	—	F2-1	—	
	14	BLU	6E		—	—	F3-2	—	
81	18	BLU	6F	HARNESS	—	—	F3-1	—	SOLDER

WIRE TABLE

ITEM NO	DESCRIPTION AWG	COLOR	FROM POINT	FROM CONNECTION	FROM TERM	TO POINT	TO CONNECTION	TO TERM	REMARKS
82	18	WHT	1	HARNESS	—	—	K2-5	—	
	18	RED	2		—	—	K2-7	—	
	18	BLK	3		—	—	K2-8	—	
	18	BLU	4		—	—	K2-6	—	
	18	BLK	5		—	—	C4-1	—	
	18	BLU	6		—	—	C4-2	—	
	18	RED	7		—	—	C4 C	—	
	18	BLU	8		—	—	C5-C	—	
	18	BLK	9		—	—	C5-1	—	
	18	BLK	10		—	—	C6-2	—	
	18	WHT	11		—	—	C6-C	—	
	18	RED	12		—	—	C7-2	—	
	18	BLU	13		—	—	C7-1	—	
	18	WHT	14		—	—	C7-C	—	
	18	WHT	15		—	—		—	
	18	BLU	16		—	—	K1-6	—	
	18	BLU	17		—	—		—	
	18	RED	18		—	—	K1-7	—	
	18	BLK	19		—	—	K1-8	—	
92	18	BLK	20	HARNESS	—	—		—	
38	18	BLK	—	I1-1	—	—	CB1-5	ITEM 83	
		BLK	—	I2-1	—	—	CB1-6	ITEM 83	
		BLK	—	I3-1	—	—	CB1-7	ITEM 83	
		BLK	—	I1-2	—	—	RSA3	ITEM 101	
		BLK	—	I2-2	—	—	RSB3	ITEM 101	
39	18	BLK	—	I3-2	—	—	RSC4	ITEM 101	
78	14	WHT	1	HARNESS	—	—	CB9-2	—	
	TWP	RED	2		—	—	CB9-1	—	
		WHT	3		—	—	CB4-2	—	
		RED	4		—	—	CB4-1	—	
		WHT	5		—	—	CB3-2	—	
		RED	6		—	—	CB3-1	—	
	14	WHT	10		—	—	K2-9	—	
	TWP	RED	9		—	—	K2-7	—	
	14	WHT	11		—	—		—	
	14	WHT	12		—	—	K2-6	—	
	14	RED	7		—	—		—	
78	14	RED	8	HARNESS	—	—	K2-8	—	
79	—	—	—	HARNESS	P21	—	J21 (ITEM #14)	—	
79	—	—	—	HARNESS	P28	—	GM17 (ITEM #36)	—	
77	—	—	—	HARNESS	P1	—	B64 (ITEM #12)	—	
	—	—	—		J7	—	CHASSIS (ITEM #1)	—	
	—	—	—		J8	—	CHASSIS (ITEM #1)	—	
	—	—	—		J13	—	CHASSIS (ITEM #1)	—	
	—	—	—		S1	—	CHASSIS (ITEM #1)	—	
	—	—	—		J5	—	CHASSIS (ITEM #1)	—	
77	—	—	—	HARNESS	J8	—	CHASSIS (ITEM #1)	—	
41	10	GRN/YEL	—	LF1-GND	ITEM 84	—	FRAME GRD-2	ITEM 86	
38	18	RED	—	J1-1	ITEM 45	—	K1-7	ITEM 87	
41		GRN/YEL	—	J1-3	ITEM 45	—	FRAME GRD-2	ITEM 86	
39		WHT	—	J1-4	ITEM 46	—	K1-5	ITEM 87	
34		BLK	—	J1-5	ITEM 45	—	K1-9	ITEM 87	
34	18	BLU	—	J1-6	ITEM 45	—	K1-8	ITEM 87	
47	8	BLK	—	CB1-5	ITEM 83	—	K1-4	ITEM 83	
47	8	BLK	—			—	K2-4		
28	8	RED	—	CB1-6		—	K1-3		
28	8	RED	—			—	K2-3		
44	8	BLU	—	CB1-7		—	K1-2		
44	8	BLU	—			—	K2-2		
84	8	WHT	—	CB1-8		—	K1-1		
84	8	WHT	—		ITEM 83	—	K2-1	ITEM 83	
84	14	BLK	—	CB18-3	ITEM 133	—	J22-8	ITEM 85	
94	TWP	WHT	—	CB18-4	ITEM 133	—	J22-5	ITEM 85	
94	14	BLK	—	J22-8	ITEM 85	—	J23-8	ITEM 85	A OR B ONLY
94	TWP	WHT	—	J22-5	ITEM 85	—	J23-5	ITEM 85	A OR B ONLY
33	18	BLU	—	CB2-1	ITEM 87	—	CB1-7	ITEM 86	A OR B ONLY
35	18	WHT	—	CB2-2	ITEM 87	—	CB1-8	ITEM 86	A OR B ONLY
33	18	BLU	—	CB2-3	ITEM 87	—	J31-8	ITEM 87	A OR B ONLY
36	18	WHT	—	CB2-4	ITEM 87	—	J31-5	ITEM 87	A OR B ONLY
41	18	GRN/YEL	—	J31-8	ITEM 87	—	FRAME GND 2	ITEM 86	
40	18	YEL	—	C1+	ITEM 87	—	C2—	ITEM 87	
80	18	YEL	—	C2—	ITEM 87	—	C3—	ITEM 87	
69		BLK	—	P12-1	ITEM 108	—	P12-2	ITEM 108	A OR D ONLY
		BLK	—	P12-3	ITEM 108	—	P12-4	ITEM 108	
		BLK	—	P11-1	ITEM 40	—	P11-3	ITEM 40	
		BLK	—	P18-1	ITEM 40	—	P18-3	ITEM 40	
		BLK	—	P18-2	ITEM 40	—	P18-4	ITEM 40	
		BLK	—	P19-2	ITEM 40	—	P19-7	ITEM 40	
		BLK	—	P18-4	ITEM 40	—	P19-8	ITEM 40	
		BLK	—	P18-6	ITEM 40	—	P18-9	ITEM 40	A OR D ONLY
		BLK	—	P11-1	ITEM 40	—	P11-2	ITEM 40	B OR E ONLY
		BLK	—	P18-2	ITEM 40	—	P19-3	ITEM 40	
		BLK	—	P19-1	ITEM 40	—	P19-7	ITEM 40	
		BLK	—	P19-3	ITEM 40	—	P19-8	ITEM 40	
89	18	BLK	—	P19-5	ITEM 40	—	P18-8	ITEM 40	B OR E ONLY
111	14	WHT	—	CB1-8	ITEM 85/116	—	RØN2	ITEM 85	

WIRE TABLE

ITEM NO	DESCRIPTION AWG	COLOR	FROM POINT	FROM CONNECTION	FROM TERM	TO POINT	TO CONNECTION	TO TERM	REMARKS
98	2	BLK	—	CB1-1	ITEM 94	—	LF1-A	ITEM 91	
98		BLK	—	CB1-2	ITEM 94	—	LF1-B	ITEM 91	
98		BLK	—	CB1-3	ITEM 94	—	LF1-C	ITEM 91	
93	2	WHT	—	CB1-4	ITEM 94	—	LF1-N	ITEM 91	
22	18	GRN	—	PART OF 1P6B	—	—	FRAME GND-1	ITEM 57	
22	19	BRN	—	PART OF 1P6B	—	—	J18-3	ITEM 84	
89	18	BLK	—	J15-3	ITEM 94	—			
22	18	BRN/YEL	—	PART OF 1P6B	—	—	J18-4	ITEM 84	
89	18	BLK	—	J15-4	ITEM 94	—			
22	18	BLK/YEL	—	PART OF 1P6B	—	—	J18-2	ITEM 84	
22		YIO	—		—	—	J14-2		
22		RED	—		—	—	J14-3		
22		RED/YEL	—		—	—	J14-4		
22		RED	—		—	—	J14-5		
22	18	BLK	—	PART OF 1P6B	—	—	J18-1		
99	18	BLK	—	J15-1	ITEM 94	—			
22	18	YIO	—	PART OF 1P6B	—	—	J14-1		
21	18	BLK	—		—	—	J19-2		
		BRN	—		—	—	J17-4		
		WHT	—		—	—	J19-1		
		BLK	—		—	—	J19-4		
		WHT	—		—	—	J19-3		
		BLK	—		—	—	J19-6		
		WHT	—		—	—	J19-5		
		BLU	—		—	—	J19-8		
		YEL	—		—	—	J19-7		
		BLU	—		—	—	J19-9		
			—		—	—	J19-4		
			—		—	—	J19-3		
			—		—	—	J19-2		
21	18	BLU	—	PART OF 1P6B	—	—	J19-1		
95	18	BLU	—	J19-8	ITEM 94	—	J17-2		
95	18	BLU	—	J19-6	ITEM 94	—			
95	18	BLU	—	J19-7	ITEM 94	—	J17-1	ITEM 94	
34		BLK	—	CB1-5	ITEM 66	—	J31-X	ITEM 97	D OR E ONLY
36		RED	—	CB1-6		—	J31-Y		D OR E ONLY
33		BLU	—	CB1-7		—	J31-Z		D OR E ONLY
35	KO	WHT	—	CB1-8	ITEM 96	—	J31-W	ITEM 97	D OR E ONLY
125	14 TWP	RED	—	K2-6	ITEM 133	—	CB2-1	ITEM 133	D OR E ONLY
		WHT	—	K2-5	ITEM 133	—	CB2-2	ITEM 133	D OR E ONLY
138	14 TWP	RED	22B	HARNESS	—	—	J32-8	—	
		WHT	22A		—	—	J32-5	—	
		RED	18C		—	—	J23-8	—	
		WHT	18C		—	—	J23-5	—	
		RED	18B		—	—	J23-8	—	
		WHT	18A		—	—	J23-5	—	
138	14 TWP	RED	8B		—	—	CB2-3	—	
		WHT	8A	HARNESS	—	—	CB2-4	—	D OR E ONLY
134	14	GRN/YEL	—	J29 / J30 - G	SEE NOTE 1	—	FRAME GRD - 3	133	
			—	J28 - G		—	FRAME GRD - 3		
			—	J26 / J27 - G		—	FRAME GRD - 4		
			—	J24 / J25 - G		—	FRAME GRD - 4		
			—	J23 - G		—	FRAME GRD - 5		
			—	J22 - G	SEE NOTE 1	—	FRAME GRD - 5		
134	14	GRN/YEL	—	LOGIC BLOCK-G	133	—	FRAME GRD - 6	133	

REVISIONS		
ENG	CHANGE NO.	REV.

TITLE	SCHEDULE	NUMBER	REV.
POWER CONTROLLER	SUA	863-0-0	K

863-0-0

AUTOMATED BY PRTLST.3P(44)

P A R T S L I S T

LINE	ITEM	DOCUMENT NUMBER	PART NUMBER	DESCRIPTION	QUANTITY PER VARIATION A	B	D	E
1	1	E-IA-7411288-0-0	7411288-00	CHASSIS P.S. (KL10)	1	1	1	1
2	2	E-IA-7412256-0-0	7412256-00	PANEL FRONT (863) KL10	1	1	1	1
3	3	D-IA-7411290-0-0	7411290-00	COVER P.C. (KL10)	1	1	1	1
4	4	D-IA-7412187-0-0	7412187-00	SUPPORT,FILTER #1 KL10	1	1	1	1
5	5	C-IA-7412113-0-0	7412113-00	BRKT CONN NO 1 (863) KL10	1	1	1	1
6	6	D-IA-7412118-0-0	7412118-00	BRKT NO CONN KL10 (863)	1	1	1	1
7	7	C-MD-7412122-0-0	7412122-00	PANEL 2-OUTLET KL10 (863)	1	1	1	1
8	8	C-MD-7412082-0-0	7412082-00	PANEL 4 OUTLET KL10 (863)	1	1	1	1
9	9	E-IA-7412278-0-0	7412278-00	PANEL SIDE (863) KL10	1	1	1	1
10	10	C-MD-7412280-0-0	7412280-00	BRKT NO 3 CONN KL10 (863)	1	1	1	1
11	11		1211191-00	CONN,POWER 3PIN RCPT NEMA L6-20	-	1	-	-
12	12	C-AD-7009632-0-0	7009632-00	LOGIC 863 A	1	1	1	1
13	13		5411159-00	BOARD RESISTOR (863)	1	1	1	1
14	14		5411157-00	INDICATOR LED	1	1	1	1
15	15		1211493-00	FILTER LINE 120/240 75AMP	1	1	1	1
16	16		1211496-00	*** THIS ITEM IS NOT USED ***	-	-	-	-
17	17		1210191-06	*** THIS ITEM IS NOT USED ***	-	-	-	-
18	18		1205351-00	CONN,POWER 3PIN RCPT NEMA 5-15R	6	-	6	-
19	19		1211746-01	CONTACTOR, 40A,4P ,600V,	2	2	2	2
20	20		1211537-00	CONN,RCPT 7PIN	1	1	1	1
21	21		1611490-00	XFMRA P=BT S= 36.2V @.52A UL	1	1	1	1
22	22		1611546-00	XFMRA P=AB S=48CT @250MA + #4960	1	1	1	1
23	23		1010184-00	30,000 MFD 25V +75-10% AL EL	1	1	1	1
24	24		1010510-00	6000 MFD 50V +75-10% AL EL	2	2	2	2
25	25		5410206-00	CONTROL PILOT	1	1	1	1
26	26		9107765-22	WIRE,STRND, 8AWG IPVC UL1431	A/R	A/R	A/R	A/R
27	27		0W516-00	3 PHASE LOW VOLTAGE DETECTOR	1	1	-	-
28	28		W7000-00	AUX POW SUPPLY-KL10	1	1	1	1
29	29		G8015-00	POWER CTRL LOGIC KL10	1	1	1	1
30	30		G8017-00	863 INDICATOR DRIVER	1	1	1	1

REVISION HISTORY			BASIC PART NO: 00863
ENG	ECO NUMBER	REV	SECTION A OF A
JD	863-MR010	K	SECTION. VARIATION INDEX [A] A ,B ,D ,E [B] [C] [D] [E] [F]

DRN: K. GAMACHE	DATE: 4-FEB-75	
CHK'D: D. SIREEN	DATE: 4-FEB-75	
DES.ENG.: J. DREW	DATE: 4-FEB-75	
RESP.ENG.: J. DREW	DATE: 4-FEB-75	
MFG.ENG.: B. OBRIEN	DATE: 6-FEB-75	
ASSEMBLY NUMBER: E-UA-863-0-0	TOP DOCUMENT NUMBER: #B-DD-853-0	FILE NAME: Z2464K.PLS

D I G I T A L

TITLE PARTS LIST

POWER CONTROLLER

DOCUMENT NUMBER

SIZE	CODE	NUMBER	REV
K	PL	863-0-DBP	K

EDIT # 5

"THIS DRAWING AND SPECIFICATIONS HEREIN, ARE THE PROPERTY OF DIGITAL EQUIPMENT CORPORATION AND SHALL NOT BE REPRODUCED OR COPIED OR USED IN WHOLE OR IN PART AS THE BASIS FOR THE MANUFACTURE OR SALE OF ITEMS WITHOUT WRITTEN PERMISSION. COPYRIGHT (C) 1982. DIGITAL EQUIPMENT CORPORATION "

LINE	ITEM	DOCUMENT NUMBER	PART NUMBER	DESCRIPTION	QUANTITY PER VARIATION A	B	D	E
31	31		1209351-09	MATE-N-LOK 9POS COMM HSG,PIN	1	1	1	1
32	32		1209351-04	MATE-N-LOK 4POS COMM HSG,SKT	2	2	2	2
33	33		9107390-66	WIRE,STRND,10AWG,IPVC UL3317	A/R	A/R	A/R	A/R
34	34		9107390-00	WIRE,STRND,10AWG,IPVC UL3317	A/R	A/R	A/R	A/R
35	35		9107390-99	WIRE,STRND,10AWG,IPVC, UL3317	A/R	A/R	A/R	A/R
36	36		9107390-22	WIRE,STRND,10AWG,IPVC UL3317	A/R	A/R	A/R	A/R
37	37		1210012-01	HT SINK W/HOLES 1.81X1.81	1	1	1	1
38	38		1503399-00	DEC3790-2 PNP 150WC SI 30 30 M	1	1	1	1
39	39		1211263-00	LAMP,PWR ON INDICATOR,RED W/25K	3	3	3	3
40	40		1209378-00	MATE-N-LOK PIN COMM 20-14AWG STR	12	10	12	10
41	41		9107779-54	WIRE,STRND,10AWG,IPVC UL3317	A/R	A/R	A/R	A/R
42	42		1209120-00	RLY,G.P.,115V COIL,DPDT,10A	1	1	1	1
43	43		1201220-00	SKT,TUBE 8PIN	1	1	1	1
44	44		9107765-66	WIRE,STRND, 8AWG IPVC UL1431	A/R	A/R	A/R	A/R
45	45		1211541-00	CONN, SKT 8-10 AWG	5	5	5	5
46	46		1210430-00	BRACKET,CAPACITOR,2"	3	3	3	3
47	47		9107765-00	WIRE,STRND, 8AWG IPVC UL1431	A/R	A/R	A/R	A/R
48	48		9006073-01	SCREW,PAN,PHIL 10-32X 1/2 SS	10	10	10	10
49	49		9006070-01	SCREW,PAN,PHIL 10-32X 5/16 SS	4	4	4	4
50	50		9006025-01	SCREW,PAN,PHIL 6-32X 5/8 SS	3	3	3	3
51	51		9006037-01	SCREW,PAN,PHIL 8-32X 3/8 SS	16	16	16	16
52	52		9006024-01	SCREW,PAN,PHIL 6-32X 1/2 SS	6	6	6	6
53	53		9006022-01	SCREW,PAN,PHIL 6-32X 3/8 SS	8	8	8	8
54	54		9006021-01	SCREW,PAN,PHIL 6-32X 5/16 SS	20	20	20	20
55	55		9006565-00	NUT,KEP 10-32X 3/8 AF	11	11	11	11
56	56		9006560-00	NUT,KEP 6-32X 5/16AF	27	27	27	27
57	57		9006635-00	WASHER,LOCK,INT,.3100D X .200ID	14	14	14	14
58	58		9006634-00	WASHER,LOCK,INT,.2300D X .172ID	16	16	16	16
59	59		9006633-00	WASHER,LOCK,INT,.2800D X .146ID	66	66	66	66
60	60		9008196-00	RECP. CLIP ON F/1/4 TURN FASTNR	4	4	4	4
61	61		9007786-00	RETAINER, U-NUT, 10-32	14	14	14	14
62	62		1210130-00	SKT,XSTR 2PIN TO-3	1	1	1	1
63	63		9009637-00	TERM,RING 1/4STUD CRIMP 16-2	3	3	3	3
64	64		9107765-99	WIRE,STRND, 8AWG IPVC UL1431	A/R	A/R	A/R	A/R
65	65		9006036-01	SCREW,PAN,PHIL 8-32X 5/16 SS	14	14	14	14
66	66		9006020-01	SCREW,PAN,PHIL 6-32X 1/4 SS	36	36	36	36
67	67		9007930-00	TERM,RING #10STUD CRIMP 16-2	5	5	5	5
68	68		9008318-00	*** THIS ITEM IS NOT USED ***	-	-	-	-
69	69		1212124-00	CKT BKR 30.0 A 240V 2P SERIES TR	1	1	-	-
70	70		9007044-00	GROMMET #4 GS-4	A/R	A/R	A/R	A/R
71	71		1211194-00	CONN,POWER 3PIN RCPT NEMA L5-30	1	-	-	-
72	72		1000034-00	.10 MFD 1000VDC +20-105 P/OIL	4	4	4	4
73	73	C-IA-7413005-0-0	7413005-00	PLATE OUTLET 30 AMP	1	1	1	1
74	74	C-IA-7010455-0-0	7010455-00	HOUSING CONN ASSY [KL10] 863	1	1	1	1
75	75	D-IA-7010734-0-0	7010734-00	HARNESS DC NO 5 [863]	1	1	1	1
76	76	E-IA-7010585-0-0	7010585-00	HARNESS DC 2 [863]	1	1	-	-
77	77	E-IA-7010586-0-0	7010586-00	HARNESS DC NO.1 KL10	1	1	1	1
78	78	D-IA-7010731-0-0	7010731-00	HARNESS CAPACITOR KL10	1	1	1	1

DIGITAL	TITLE	SECTION A OF A	SIZE	CODE	DOCUMENT NUMBER	REV
	POWER CONTROLLER		K	PL	863-0-08P	K

LINE	ITEM	DOCUMENT NUMBER	PART NUMBER	DESCRIPTION	QUANTITY PER VARIATION A	B	D	E
79	79	D-IA-7010733-0-0	7010733-00	HARNESS FAULT INDICATOR KL10	1	1	1	1
80	80	E-IA-7010587-0-0	7010587-00	HARNESS DC 3 [863]	1	1	1	1
81	81	E-IA-7010588-0-0	7010588-00	HARNESS AC TRANSFORMER [863]	1	1	1	1
82	82	D-IA-7010732-0-0	7010732-00	HARNESS CAPACITOR KL10	1	1	1	1
83	83		1211515-00	TERM,RING 1/4STUD CRIMP	16	16	16	16
84	84		9107440-09	WIRE,STRND,14AWG,IPVC UL3317	A/R	A/R	A/R	A/R
85	85		9007969-00	TERM,QUICK .300TAB CRIMP 14-1	7	7	4	4
86	86		9009696-00	TERM,RING 1/4STUD CRIMP 10-1	10	10	12	12
87	87		9007926-01	TERM,RING #10STUD CRIMP 10-1	7	7	5	5
88	88		9107360-44	WIRE,STRND,18AWG,IPVC UL1429	A/R	A/R	A/R	A/R
89	89		9107360-00	WIRE,STRND,18AWG,IPVC UL1429	A/R	A/R	A/R	A/R
90	90		9107764-00	WIRE,STRND, 2AWG IPVC UL1431	A/R	A/R	A/R	A/R
91	91		1212086-00	TERM,RING 1/3STUD FLAGP	8	8	8	8
92	92		9006563-00	NUT,KEP 8-32X 11/13AF	20	20	20	20
93	93		9107764-99	WIRE,STRND, 2AWG IPVC UL1431	A/R	A/R	A/R	A/R
94	94		1209379-00	MATE-N-LOK SKT COMM 20-14AWG STR	32	32	32	32
95	95		9107360-66	WIRE,STRND,18AWG,IPVC UL1429	A/R	A/R	A/R	A/R
96	96		1209350-09	MATE-N-LOK 9POS COMM HSG,SKT	3	3	3	3
97	97		1209350-04	MATE-N-LOK 4POS HSG,SKT	3	3	3	3
98	98		1212167-01	MATE-N-LOK 4POS UNIV HSG,SKT	1	-	1	-
99	99		1211204-00	CONN,POWER 3PIN RCPT NEMA 6-15R	-	6	-	6
100	100		9006034-01	*** THIS ITEM IS NOT USED ***	-	-	-	-
101	101		9007970-00	TERM,QUICK .300TAB CRIMP 18-2	4	4	4	4
102	102		9007853-01	SCREW,PAN,PHIL 6-32X1-1/8 SS	2	2	2	2
103	103		9006707-00	*** THIS ITEM IS NOT USED ***	-	-	-	-
104	104		9009255-00	LABEL, POWER SUPPLY, 2-15/16 " L	1	1	1	1
105	105		9008268-00	COMPOUND, THERMAL JOINT.	A/R	A/R	A/R	A/R
106	106		1212170-00	MATE-N-LOK SKT UNIV 20-14AWG REE	4	-	4	-
107	107	B-DC-7413472-0-0	7413472-00	DECAL 863	1	1	1	1
108	108		9007594-00	ADHESIVE,NEOPRENE	A/R	A/R	A/R	A/R
109	109		9008203-00	NUT,KEP 1/4-20X 7/16AF	3	3	3	3
110	110		9006712-00	WASHER, NYLON, FLAT #10 .375 OD	2	2	2	2
111	111		9107370-99	WIRE,STRND,14AWG,IPVC UL1534	A/R	A/R	A/R	A/R
112	112		9007880-00	TIE,CABLE BUNDL DIA 0-1.14"=101	15	15	15	15
113	113		9008151-00	WASHER, LOCK, EXT. TOOTH #8	21	21	21	21
114	114		9006660-00	WASHER, FLAT, .375 O.D. X .187 I	11	11	11	11
115	115		9006653-00	WASHER, FLAT, .375 O.D. X .156 I	6	6	6	6
116	116		9107305-02	TUBING,SHRINK 3/16DIA.EXP UL	5	5	5	5
117	117		9007036-00	GROMMET #122-37-2500	A/R	A/R	A/R	A/R
118	118		1300155-00	*** THIS ITEM IS NOT USED ***	-	-	-	-
119	119		1301322-00	*** THIS ITEM IS NOT USED ***	-	-	-	-
120	120		9007655-00	*** THIS ITEM IS NOT USED ***	-	-	-	-
121	121		9107256-10	*** THIS ITEM IS NOT USED ***	-	-	-	-
122	122		1212315-00	CONN,POWER 5PIN RCPT NEMA L21-3	-	-	1	-
123	123		1211259-00	CONN,POWER 4PIN RCPT 240V 20A	-	-	-	1
124	124		7414606-00	*** THIS ITEM IS NOT USED ***	-	-	-	-
125	125		9107440-29	WIRE,STRND,14AWG,IPVC UL3317	-	-	A/R	A/R
126	126		9007920-00	*** THIS ITEM IS NOT USED ***	-	-	-	-

DIGITAL	TITLE	SECTION A OF A	SIZE	CODE	DOCUMENT NUMBER	REV
	POWER CONTROLLER		K	PL	863-0-D8P	K

AUTOMATED BY PRTLST.3P(44)

PARTS LIST

LINE	ITEM	DOCUMENT NUMBER	PART NUMBER	DESCRIPTION	QUANTITY PER VARIATION A	B	D	E
127	127		9007652-00	TERM,RING 1/4STUD CRIMP 14-1	1	1	1	1
128	128		9007651-00	WASHER, LOCK, EXTERNAL TOOTH #10	28	28	28	28
129	129		9007624-00	INSERT, FLUSH, SELF CLINCHING, 6	1	1	1	1
130	130		3610267-00	DECAL, ADHESIVE BACK -DANGER HIG	1	1	1	1
131	131	A-DC-7417419-0-0	7417419-00	DECAL	1	1	1	1
132	132	A-DC-7417418-0-0	7417418-00	DECAL	2	2	2	2
133	133		9007928-00	TERM,RING #10STUD CRIMP 14-1	10	10	14	14
134	134		9107777-54	WIRE,STRND,14AWG,IPVC UL3317 GR	A/R	A/R	A/R	A/R
135	135		9006822-00	SPACER, HEX, ALUM, .194 ID X .5	8	8	8	8
136	136		9006035-03	SCREW,TRUS,PHIL, 8-32X 1/4	2	2	2	2
137	137		9006077-03	SCREW,TRUS,PHIL, 10-32X 1	8	8	8	8
138	138	E-IA-7010585-0-0	7010585-01	HARNESS DC 2 863	-	-	1	1
139	139	SEE NOTE 1		*** THIS ITEM IS NOT USED ***	-	-	-	-
140	140		0W516-YA	W516 W 95V THRESHOLD	-	-	1	1
141	141	A-DC-7417750-0-0	7417750-00	DECAL WARNING	1	1	1	1
142	142	A-DC-7417749-0-0	7417749-00	DECAL 1 AMP 250V	3	3	3	3
143	143		9007211-00	FUSE,REG BLO 1 A,250V GLASS	3	3	3	3
144	144	C-MD-7417612-0-0	7417612-00	BUSS NEUTRAL FAN	1	1	1	1
145	145		9007242-00	FUSE HOLDER, 20A, 250V, PNL MNT,	3	3	3	3
146	146		1212124-04	CKT BKR 15.0 A 240V 2P SERIES TR	8	8	9	9
147	147		1211496-01	CKT BKR 60.0 A 240V 4P	1	1	1	1
148	148	A-DC-3614404-0-0	3614404-00	DECAL,-DANGER HIGH VOLTAGE- FREN	1	-	1	-
149	149		9006851-00	SPACER,HEX,THD'D,ALUM 6-32X 1	2	2	2	2
150	150		1213071-02	INSULATOR,RUBBER SILICONE SM	1	1	1	1

151 NOTE: 1 QUANTITIES IN ITEM #139 WERE COMBINED WITH ITEM #128 TO PREVENT DUPLICATE PART NUMBERS.

DIGITAL	TITLE	SECTION	SIZE	CODE	DOCUMENT NUMBER	REV
	POWER CONTROLLER	A OF A	K	PL	863-0-DBP	K

"THIS DRAWING AND SPECIFICATIONS, HEREIN, ARE THE PROPERTY OF DIGITAL EQUIPMENT CORPORATION AND SHALL NOT BE REPRODUCED OR COPIED OR USED IN WHOLE OR IN PART AS THE BASIS FOR THE MANUFACTURE OR SALE OF ITEMS WITHOUT WRITTEN PERMISSION.
COPYRIGHT © 1974, DIGITAL EQUIPMENT CORPORATION"

863-0-1 DCS F

LFI FILTER

CB1 GØA

PHASE A — 2AWG BLK
PHASE B — 2AWG RED
PHASE C — 2AWG BLU
NEUTRAL — 2AWG WHT
GROUND

ØC
J22A (ØC)
J22B (ØC)
J23A (ØC)
J23B (ØC)
J3 (ØC)
CB2 (J3) 30A
CB3 (J22) (J23)
14AWG TWP
*18AWG
18AWG

J1
GRN
RED
BLU
WHT
BLK

J24 (ØB) J25 (ØB) J26 (ØB) J27 (ØB) J28 (ØB) J29 (ØB) J30 (ØB)
CB4 (J24) CB5 (J25) CB6 (J26) CB7 (J27) CB8 (J28) CB9 (J29) CB10 (J30)
14AWG TWP

8AWG BLU
8AWG RED
8AWG WHT
8AWG BLK

.1UF 1000 VAC
.1UF 1000 VAC
.1UF 1000 VAC
.1UF 1000 VAC
.1UF 1000 VAC
.1UF 1000 VAC
.1UF 1000 VAC

I1 I2 I3

ØA ØB ØC N

P12

R1 47K 1/2W
R2 47K 1/2W
R3 47K 1/2W
W2

J11
P11
K1 COIL
K2 COIL
K3 COIL
J9

TO P15-3 SH 3
TO P17-2 SH 3
TO P17-1 SH 3
TO P15-1 & P17-3 SH 3
TO P15-4 & P17-4 SH 3
F2
F1
F3

J3 MUST BE REPLACED ETC.

J22, J23, J24, J25, J26, J27, J28, J29, J30 MUST BE REPLACED WITH CONN. SHOWN ABOVE FOR 240V OPERATION

NOTE:
FOR 120V OPERATION JUMPER P12-1 T P12-2, TO P12-3 TO P12-4 J11-1 TO J11-3
FOR 240V OPERATION JUMPER J11-1 TO J11-2
REMOVE JUMPER ON P12 CHANGE DUPLEX OUTLET PANEL T 240V PANEL.
ALL WIRING IS 18AWG UNLESS NOTED

J4 J2 J3 P9 J10

5410206
PILOT CONTROL ASSEMBLY

LOCAL ON
OFF
REMOTE ON

REFER TO THIS SHEET FOR 863 A & B VERSIONS.
SEE SHEET 2 FOR 863 D & E VERSIONS.

REVISIONS				
CHG	CHANGE NO.	REV.		
E.A.	863-00007	D	REVISED AND REDRAWN	J. Chadwick 4 May 77
E.A.	863-00008	E	R. MCLAHSON	Robert Mclahson 11-May-77
C.A.	863-MR010	F	J. DICKSON	J. Dickson 4 August 77
E.A.			J. DREW	J. Drew 5-JAN-80

FIRST USED ON OPTION/MODEL	QTY.	DESCRIPTION	PART NO.	ITEM NO.
KL10		PARTS LIST		

DIMENSIONAL TOLERANCE
DIMENSIONS ARE MILLIMETERS / INCHES
UNLESS OTHERWISE SPECIFIED

MILLIMETERS	INCHES	ANGLES
XXX ± 0.10	.XXX ± .005	±0° 30'
.XX ± 0.05	.XX ± .02	
X ± 0.5	.X ± 0.1	

THIRD ANGLE PROJECTION
REMOVE BURRS AND BREAK SHARP CORNERS
SURFACE QUALITY ✓
MATERIAL
FINISH

DRAWN — DATE 7/2/76
CHECK — DATE 7-9-76
DATE
DATE
DATE
NEXT HIGHER ASSY.
SCALE
SHEET 1 OF 5

TITLE: 863 POWER CONTROL

SIZE/CODE D DCS — NUMBER 863-0-1 — REV. F
DIST.

"THIS DRAWING AND SPECIFICATIONS, HEREIN, ARE THE PROPERTY OF DIGITAL EQUIPMENT CORPORATION AND SHALL NOT BE REPRODUCED OR COPIED OR USED IN WHOLE OR IN PART AS THE BASIS FOR THE MANUFACTURE OR SALE OF ITEMS WITHOUT WRITTEN PERMISSION.
COPYRIGHT © 1975 DIGITAL EQUIPMENT CORPORATION"

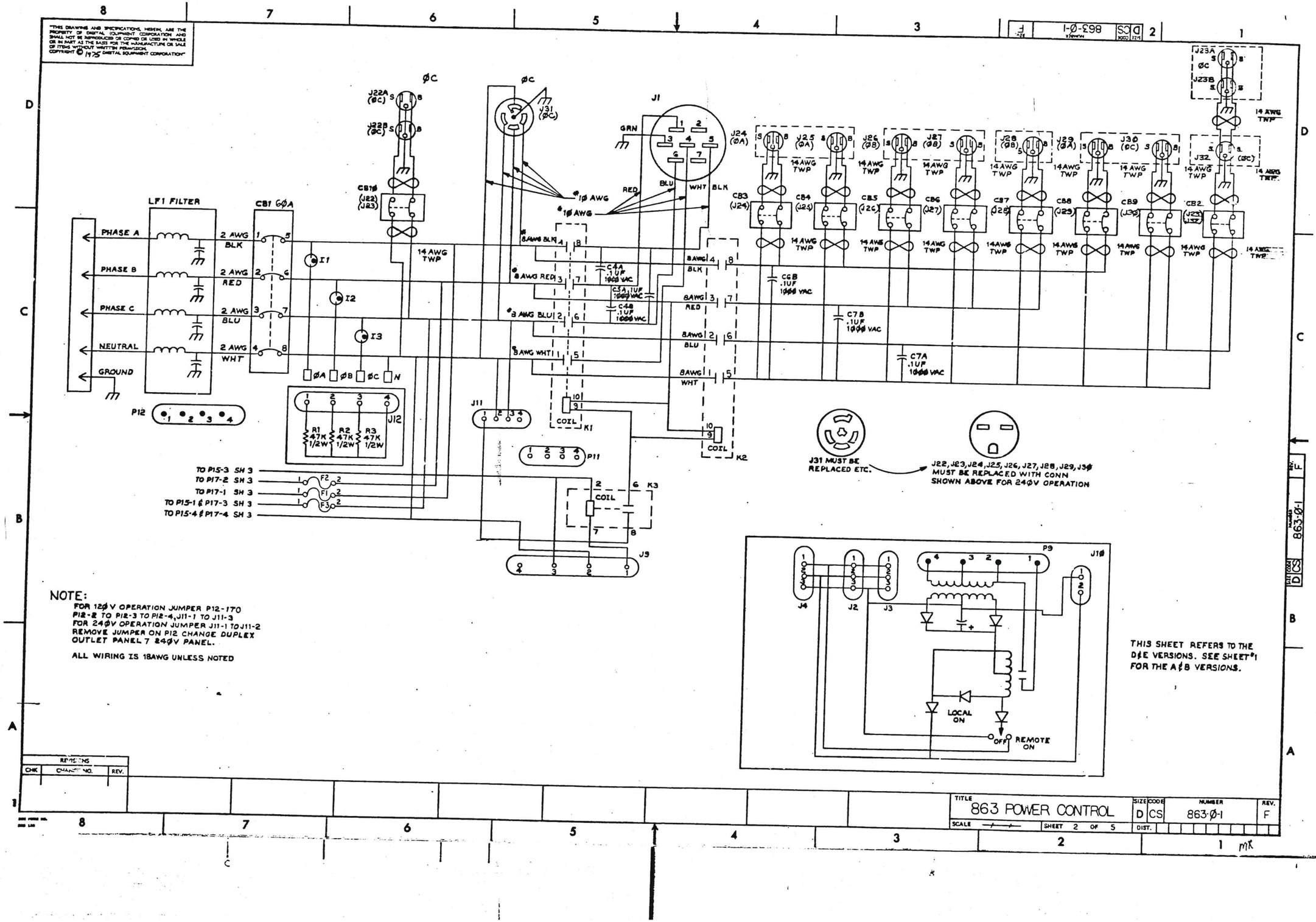

NOTE:
FOR 12ØV OPERATION JUMPER P12-1 TO 0
P12-2 TO P12-3 TO P12-4, J11-1 TO J11-3
FOR 24ØV OPERATION JUMPER J11-1 TO J11-2
REMOVE JUMPER ON P12 CHANGE DUPLEX OUTLET PANEL 7 24ØV PANEL.

ALL WIRING IS 18AWG UNLESS NOTED

THIS SHEET REFERS TO THE D&E VERSIONS. SEE SHEET #1 FOR THE A&B VERSIONS.

REVISIONS		
CHK	CHANGE NO.	REV.

TITLE	SIZE	CODE	NUMBER	REV.
863 POWER CONTROL	D	CS	863-Ø-1	F
SCALE	SHEET 2 OF 5	DIST.		

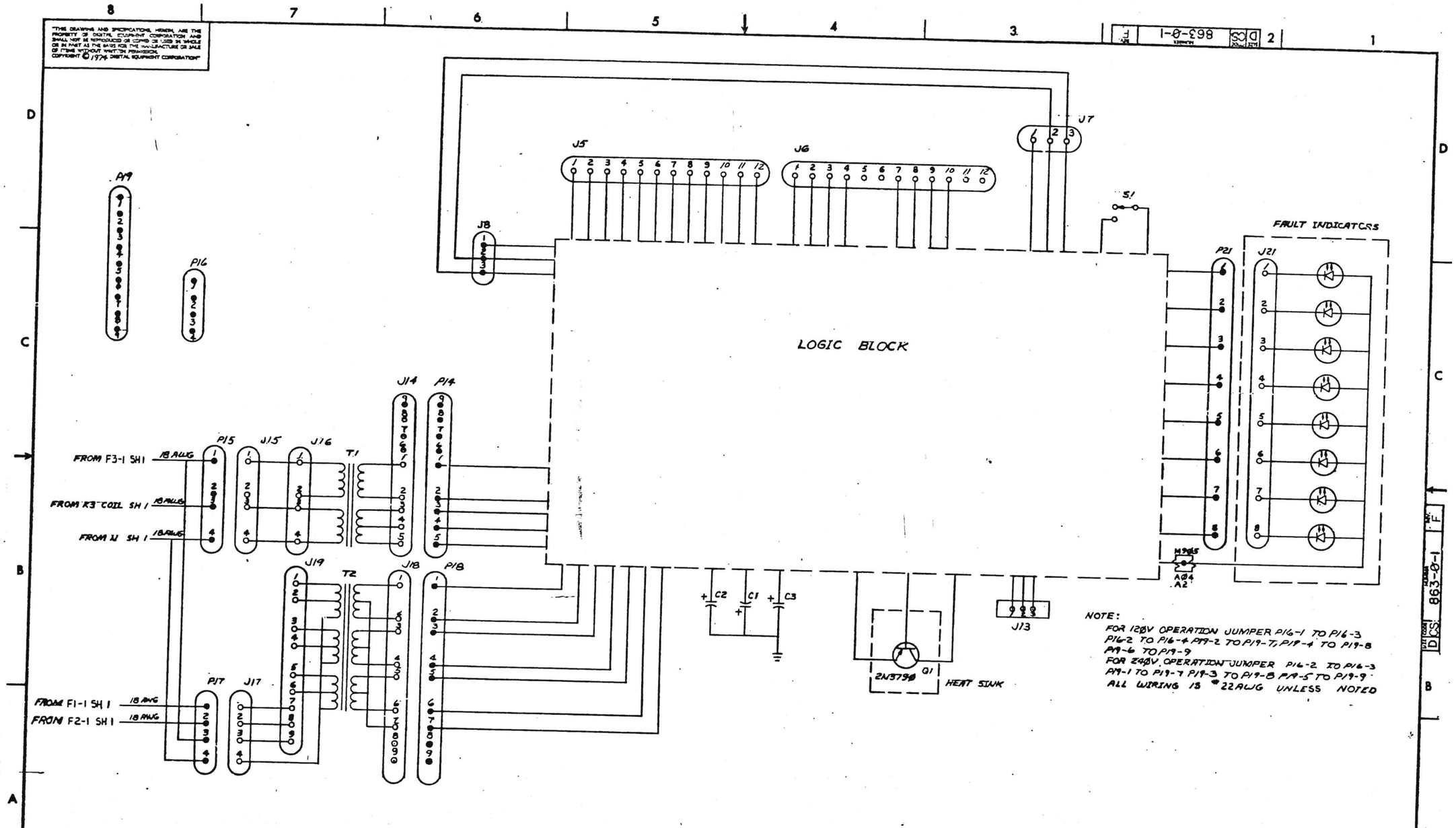

NOTE:
FOR 120V OPERATION JUMPER P16-1 TO P16-3
P16-2 TO P16-4 P19-2 TO P19-7, P19-4 TO P19-8
P19-6 TO P19-9
FOR 240V OPERATION JUMPER P16-2 TO P16-3
P19-1 TO P19-7 P19-3 TO P19-8 P19-5 TO P19-9
ALL WIRING IS #22AWG UNLESS NOTED

REVISIONS		
CHK	CHANGE NO.	REV.

TITLE	SIZE	CODE	NUMBER	REV.
863 POWER CONTROL	D	CS	863-0-1	F.
SCALE	SHEET 3 OF 5	DIST.		

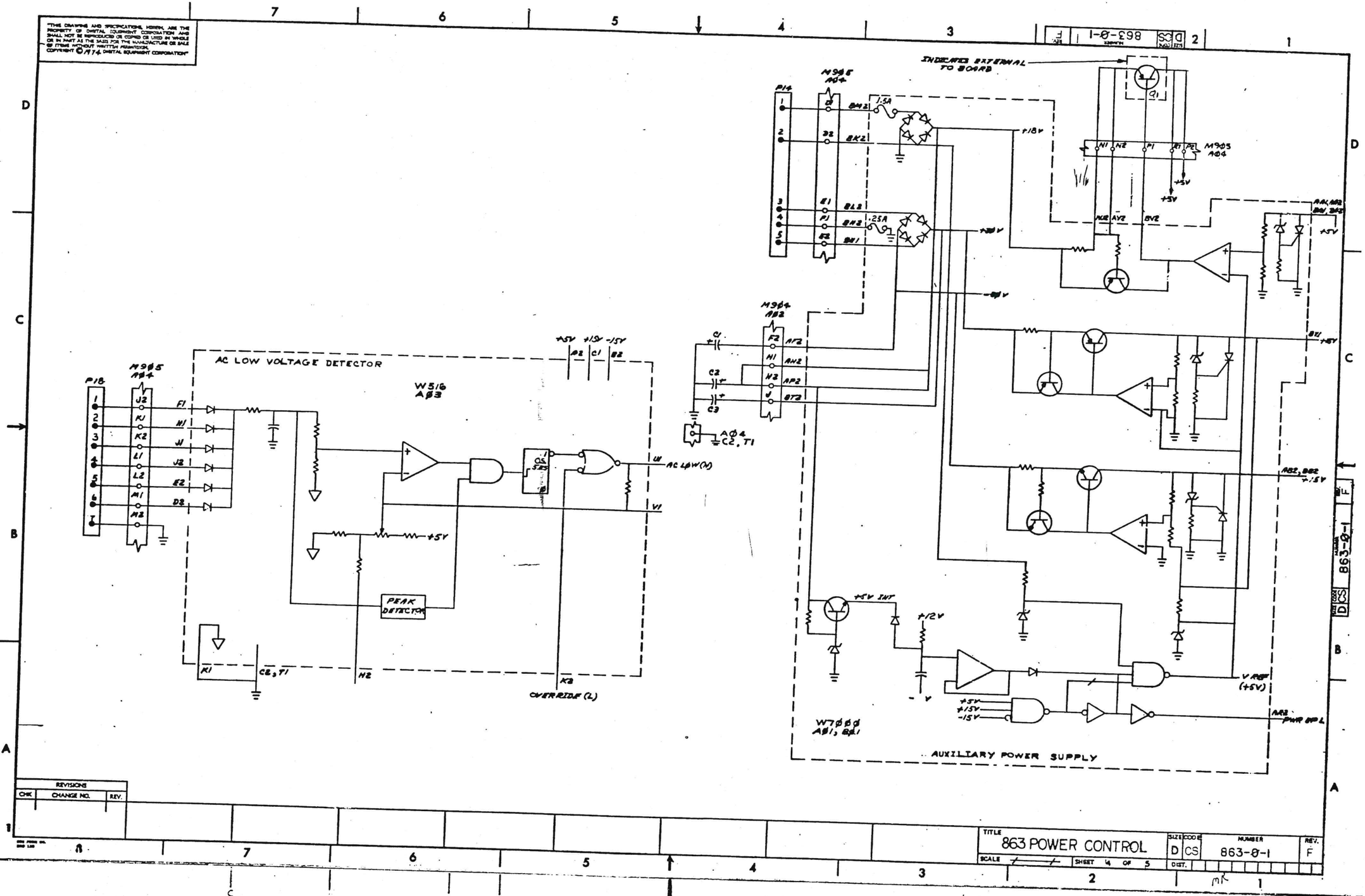

"THIS DRAWING AND SPECIFICATIONS, HEREIN, ARE THE PROPERTY OF DIGITAL EQUIPMENT CORPORATION AND SHALL NOT BE REPRODUCED OR COPIED OR USED IN WHOLE OR IN PART AS THE BASIS FOR THE MANUFACTURE OR SALE OF ITEMS WITHOUT WRITTEN PERMISSION. COPYRIGHT © 1974 DIGITAL EQUIPMENT CORPORATION"
INDICATES EXTERNAL TO BOARD
AC LOW VOLTAGE DETECTOR
W516 AØ3
PEAK DETECTOR
OVERRIDE (L)
AC LØW (N)
AUXILIARY POWER SUPPLY
W7ØØØ AØ1, BØ1
+5V INT
V REF (+5V)
PWR BP L
REVISIONS
CHK
CHANGE NO.
REV.
TITLE
863 POWER CONTROL
SIZE D
CODE CS
NUMBER 863-Ø-1
REV. F
SCALE
SHEET 4 OF 5
DIST.

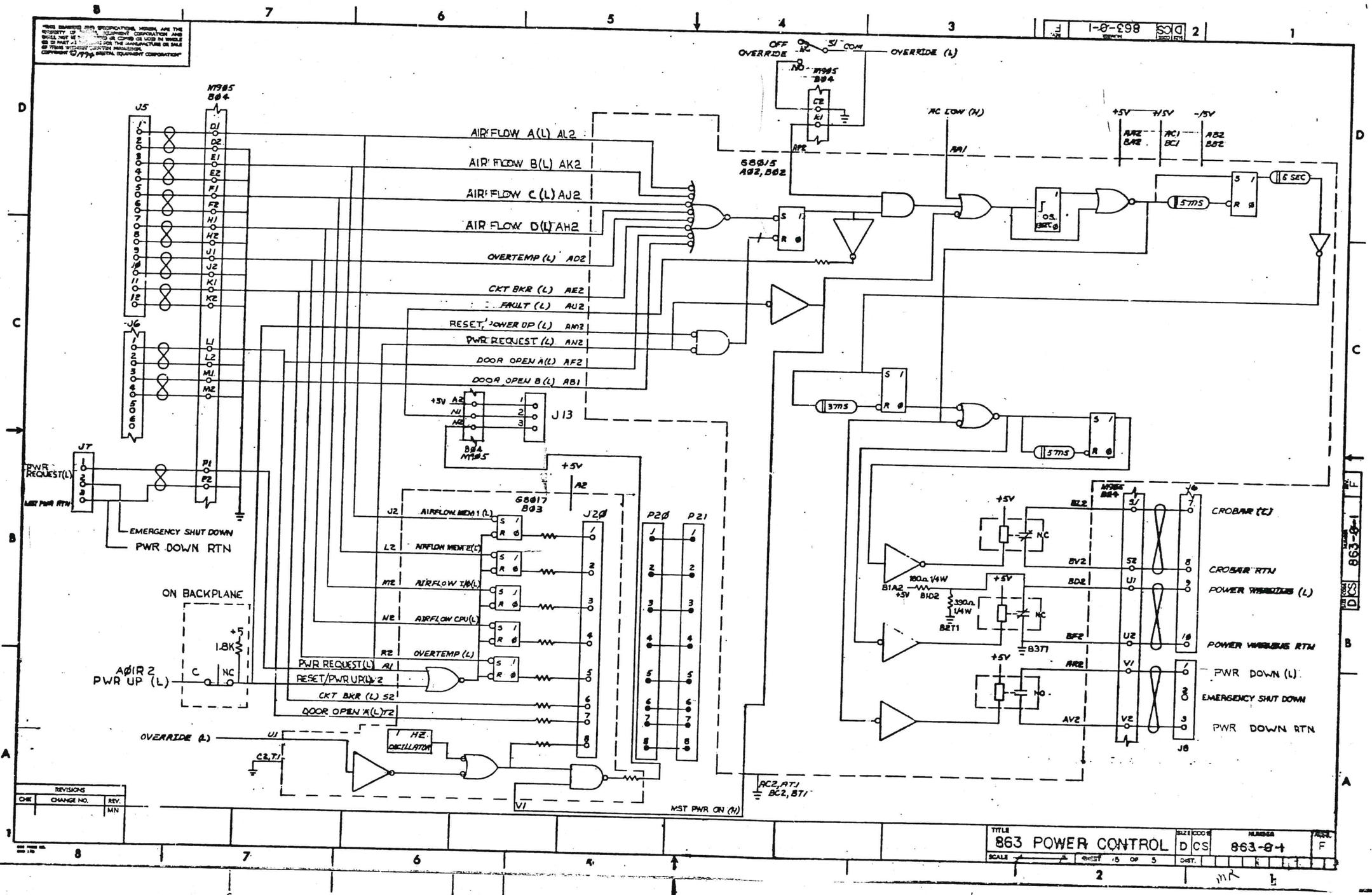

AIRFLOW A(L) AL2
AIRFLOW B(L) AK2
AIRFLOW C(L) AJ2
AIRFLOW D(L) AH2
OVERTEMP (L) AD2
CKT BKR (L) AE2
FAULT (L) AU2
RESET/POWER UP (L) AM2
PWR REQUEST (L) AN2
DOOR OPEN A(L) AF2
DOOR OPEN B(L) AB1
OVERRIDE (L)
OFF
OVERRIDE
COM
AC LOW (H)
+5V
+15V
-15V
5 SEC
5 MS
3 MS
J5
J6
J7
J13
J20
P20
P21
J8
M905 B04
G8015 A02, B02
G8017 B03
PWR REQUEST(L)
MST PWR RTN
EMERGENCY SHUT DOWN
PWR DOWN RTN
ON BACKPLANE
A01R2 PWR UP (L)
1.8K
AIRFLOW MEM 1 (L)
AIRFLOW MEM 2(L)
AIRFLOW I/O(L)
AIRFLOW CPU(L)
OVERTEMP (L)
PWR REQUEST(L)
RESET/PWR UP(L)
CKT BKR (L)
DOOR OPEN A(L)
OVERRIDE (L)
OSCILLATOR
MST PWR ON (H)
CROBAR (L)
CROBAR RTN
POWER WARNING (L)
POWER WARNING RTN
PWR DOWN (L)
EMERGENCY SHUT DOWN
PWR DOWN RTN
REVISIONS
CHK
CHANGE NO.
REV.
MN
TITLE
863 POWER CONTROL
SIZE D
CODE CS
NUMBER 863-0-1
SCALE
SHEET 5 OF 5
DIST.

This drawing and specifications, herein, are the property of Digital Equipment Corporation and shall not be reproduced or copied or used in whole or in part as the basis for manufacture or sale of items without written permission.

COPYRIGHT ©1973 DIGITAL EQUIPMENT CORPORATION

NOTES:

1. UNLESS OTHERWISE SPECIFIED
   A. RESISTORS ARE 1/4 W, ±5%.
   B. RESISTANCE IS IN OHMS.
   C. CAPACITORS ARE 100V, ±20 %.
2. R26 & R27 ARE FACTORY ADJUSTMENTS ONLY.

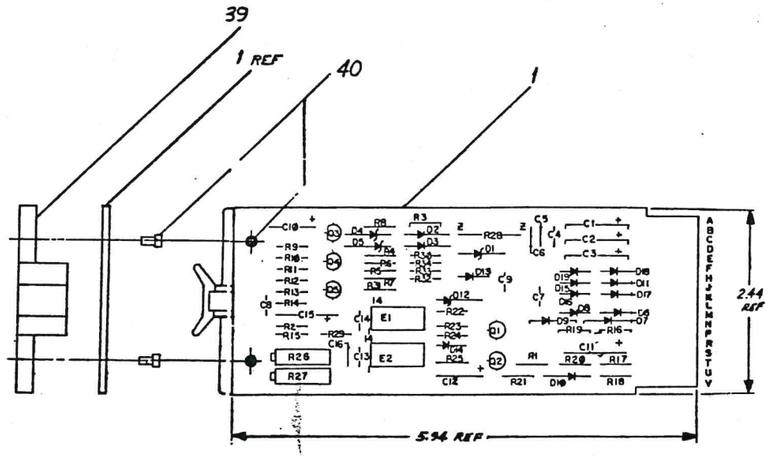

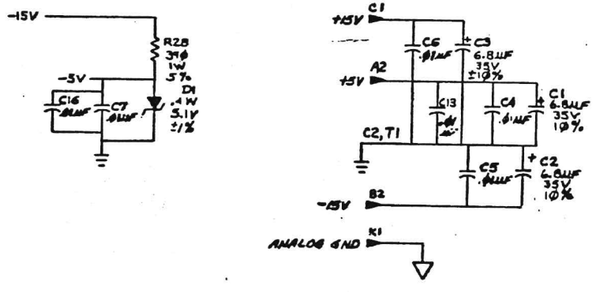

REF				
REF		X-Y COORDINATE HOLE LOCATION	K-CO-W516-0-4	REF
REF		ASSY, DRILLING HOLE LAYOUT	D-AH-W516-0-5	REF
REF		MODULE ECO HISTORY	B-MH-W516-0-6	REF
1		ETCHED CIRCUIT BOARD	50136621	1
9	C13 C14, C3 C5, C4, C6, C7, C16, C8	CAP, .01 MF, 100V, ±20%, DISC	1000161-01	2
2	C10, C12	CAP, 1.0 MF, 35V, ±10%, TANT.	10004776	3
1	C11	CAP, 39 MF, 10V, ±10%, TANT.	10000076	4
4	C1, C2, C3, C15	CAP, 6.8 MF, 35V, ±10% TANT.	10005306	5
1	D3	DIODE, D-003, GERMANIUM	1100100	6
4	D2, D7, D9, D16	DIODE, D662	1100113	7
4	D6, D8, D13, D14	DIODE, D664	1100114	8
2	D4, D5	DIODE, IN759A, 12V, ±5%, ZENER	11100836	9
2	D1, D12	DIODE, 0.4W, 5.1V, ±1%, ZENER	11005873	10
1	R11	RES., 909Ω, 1/8W, ±1% MF	13002685	11
6	D11, D15-D18	DIODE, 1N4005	1110967	12
4	Q1, Q2, Q3, Q5	TRANSISTOR, SILICON, NPN, A65	15100705	13
1	Q4	TRANSISTOR, SILICON, PNP, A55	15100706	14
3	R1, R23, R25	RES, 1K, 1/4W, ±5% CC	13000365	15
2	R8, R17	RES, 51, 1/4W, ±5% CC	13000422	16
2	R5, R6	RES, 47 1/4W, ±5% CC	13000202	17
1	R12	RES, 261, 1/8W, ±1% MF	13002873	18
1	R13	RES, 311, 1/8W, ±1% MF	13002911	19
1	R10	RES, 1.47K, 1/8W, ±1% MF	13005108	20
1	R14	RES, 1.21 K, 1/8W, ±1% MF	13002871	21
1	R9	RES, 9.09K, 1/8W, ±1% MF	13004855	22
1	R28	RES, 390, 1W, ±5% CC	13002384	23
1	R7	RES, 390, 1/4W, ±5% CC	13000309	24
1	R22	RES, 750, 1/4W, ±5% CC	13001401	25
2	R3, R4	RES, 1.5K, 1/4W, ±5% CC	13000391	26
3	R19, R30, R31	RES, 4.7K, 1/4W, ±5% CC	13000447	27
3	R15, R24, R32	RES, 10K, 1/4W, ±5% CC	13000479	28
1	R2	RES, 30K, 1/4W, ±5% CC	13002394	29
2	R16, R18	RES, 100K, 1/4W, ±5% CC	13002466	30
2	R21, R34	RES, 47K, 1/4W, ±5% CC	13002177	31
1	R26	VAR. RES., 5kΩ, 3/4W, ±10%	13001143-06	32
1	R27	VAR. RES., 10K, 3/4W, ±10%	13001143-10	33
1	R20	RES, 12K, 1/4W, ±5% CC	13001320	34
1	R33	RES, 3.3K, 1/4W, ±5% CC	13000439	35
1	R29	RES, 20K, 1/4W, ±5% CC	13002391	36
1	E2	IC DEC 9601	1909373	37
1	E1	IC DEC 751078	1970268	38
1		HANDLE, FLIP CHIP, WHITE	9008937-3	39
2		EYELET	98.96732	40

QTY	REF DESIGNATION	DESCRIPTION	PART NO.	ITEM No.

PARTS LIST

ETCH BOARD REV D

IC TYPE	GND	+ 5V
GND AND 5V ARE USUALLY PIN 7 AND 14 RESPECTIVELY. EXCEPTIONS ARE STATED ABOVE		

IC PIN LOCATIONS

FIRST USED ON OPTION MODEL: 863

D03	IN994
D664	IN3606
D662	IN645
DEC NO.	EIA NO.

SEMICONDUCTOR CONVERSION CHART

REV	REVISIONS	CHANGE NO.	CHK
D	W516-0-1/0/1		

DRN G Nichols 8-1-73
CHK
ENG
PROJ
NEXT HIGHER ASSY
SCALE
SHEET 1 OF 2

EQUIPMENT CORPORATION MAYNARD, MASSACHUSETTS

TITLE: AC LOW VOLTAGE DETECTOR

SIZE D | CODE CS | NUMBER W516-0-1 | REV D

DIST.

THIS DRAWING AND SPECIFICATION, HEREIN, ARE THE PROPERTY OF DIGITAL EQUIPMENT CORPORATION AND SHALL NOT BE REPRODUCED OR COPIED OR USED IN WHOLE OR IN PART AS THE BASIS FOR THE MANUFACTURE OR SALE OF ITEMS WITHOUT WRITTEN PERMISSION.
COPYRIGHT © 1973, DIGITAL EQUIPMENT CORPORATION

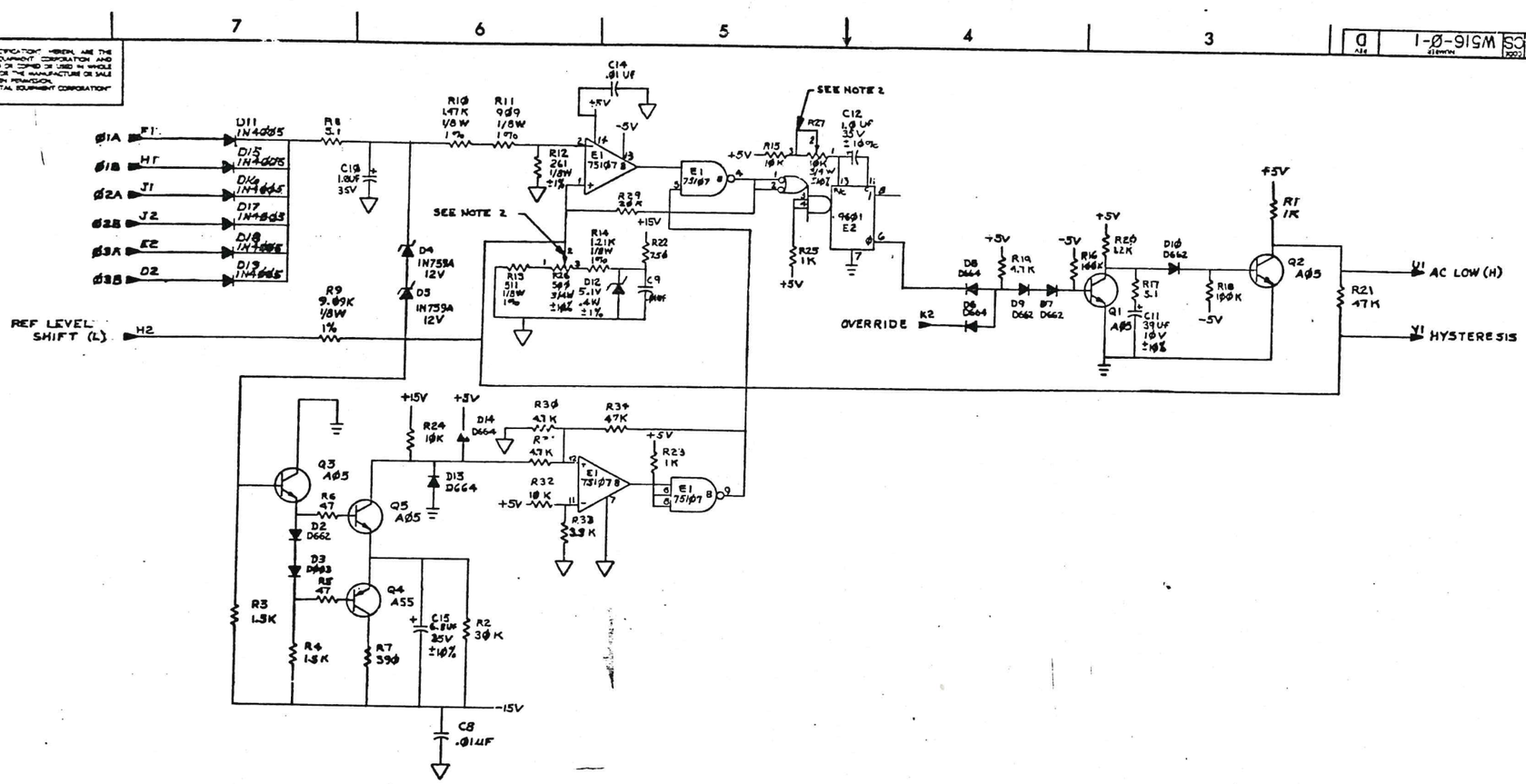

REVISIONS		
CHK	CHANGE NO.	REV

TITLE	SIZE	CODE	NUMBER	REV.
AC LOW VOLTAGE DETECTOR	D	CS	W516-Ø-1	D
SCALE —/— SHEET 2 OF 2	DIST.			

LAST CODE DCS W516-Ø-1 REV D

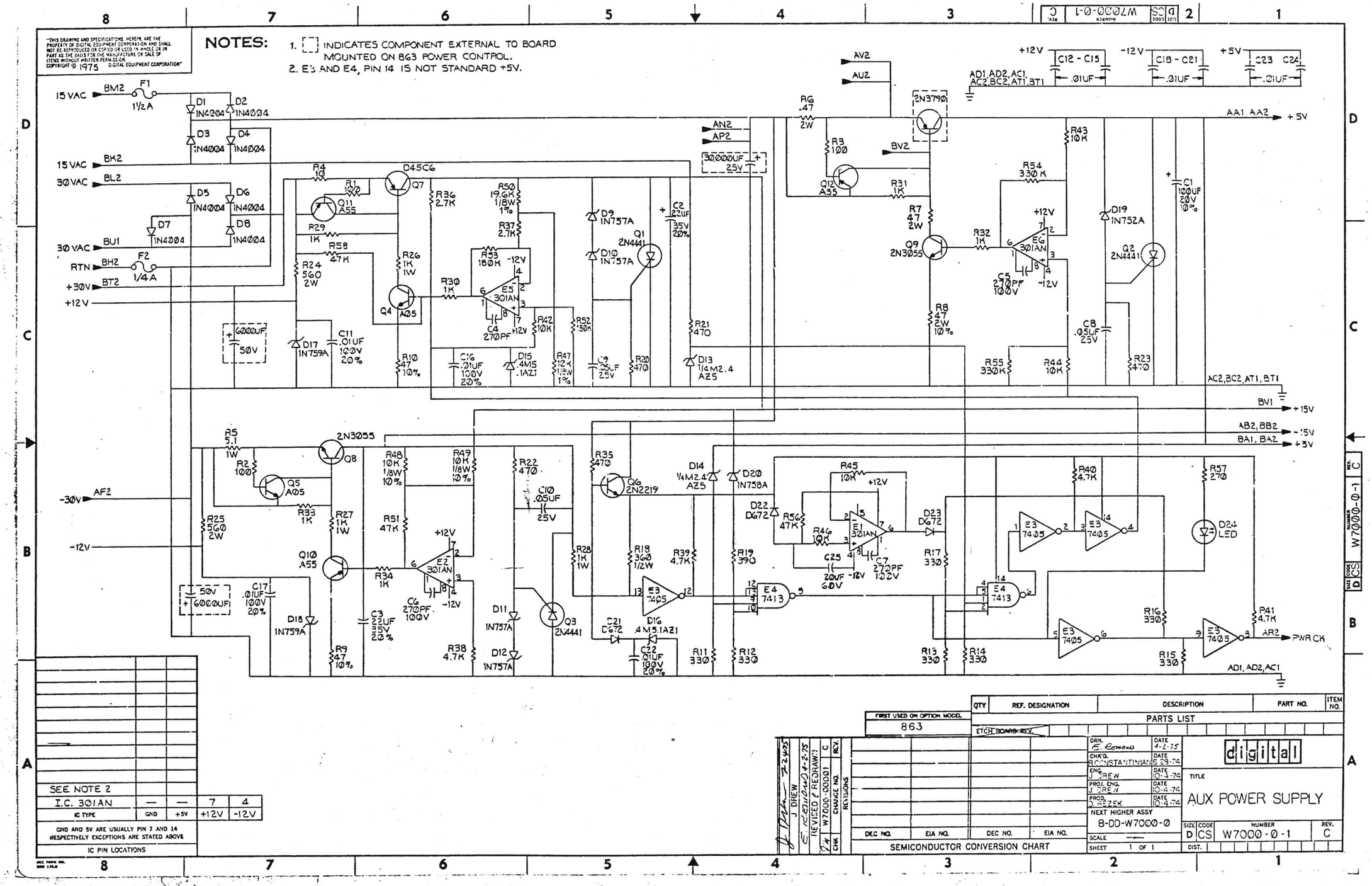

NOTES:
1. [ ] INDICATES COMPONENT EXTERNAL TO BOARD MOUNTED ON 863 POWER CONTROL.
2. E3 AND E4, PIN 14 IS NOT STANDARD +5V.
"THIS DRAWING AND SPECIFICATIONS, HEREIN, ARE THE PROPERTY OF DIGITAL EQUIPMENT CORPORATION AND SHALL NOT BE REPRODUCED OR COPIED OR USED IN WHOLE OR IN PART AS THE BASIS FOR THE MANUFACTURE OR SALE OF ITEMS WITHOUT WRITTEN PERMISSION. COPYRIGHT © 1975 DIGITAL EQUIPMENT CORPORATION"
15 VAC
30 VAC
RTN
+30V
+12V
-30V
-12V
AA1, AA2
AC2, BC2, AT1, BT1
BV1
AB2, BB2
BA1, BA2
AD1, AD2, AC1
AR2
PWR CK
+15V
+5V
-15V
+3V
SEE NOTE 2
I.C. 301AN
IC TYPE
GND
+5V
+12V
-12V
GND AND 5V ARE USUALLY PIN 7 AND 14 RESPECTIVELY EXCEPTIONS ARE STATED ABOVE
IC PIN LOCATIONS
FIRST USED ON OPTION MODEL
863
QTY
REF. DESIGNATION
DESCRIPTION
PART NO.
ITEM NO.
PARTS LIST
ETCH BOARD REV.
J DREW 7-24-75
E. REMOND 4-2-75
REVISED & REDRAWN
W7000-00001
C
CHK
CHANGE NO.
REV.
REVISIONS
DEC NO.
EIA NO.
DEC NO.
EIA NO.
SEMICONDUCTOR CONVERSION CHART
DRN. E. Remond DATE 4-2-75
CHK'D. R. CONSTANTINIAN DATE 5-28-74
ENG. J. DREW DATE 10-4-74
PROJ. ENG. J. DREW DATE 10-4-74
PROD. D. REZEK DATE 10-4-74
NEXT HIGHER ASSY B-DD-W7000-0
SCALE
SHEET 1 OF 1
digital
TITLE
AUX POWER SUPPLY
SIZE D
CODE CS
NUMBER W7000-0-1
REV. C
DIST.

This drawing and specifications, herein, are the property of Digital Equipment Corporation and shall not be reproduced or copied or used in whole or in part as the basis for the manufacture or sale of items without written permission. COPYRIGHT © 1973
DIGITAL EQUIP CORP.

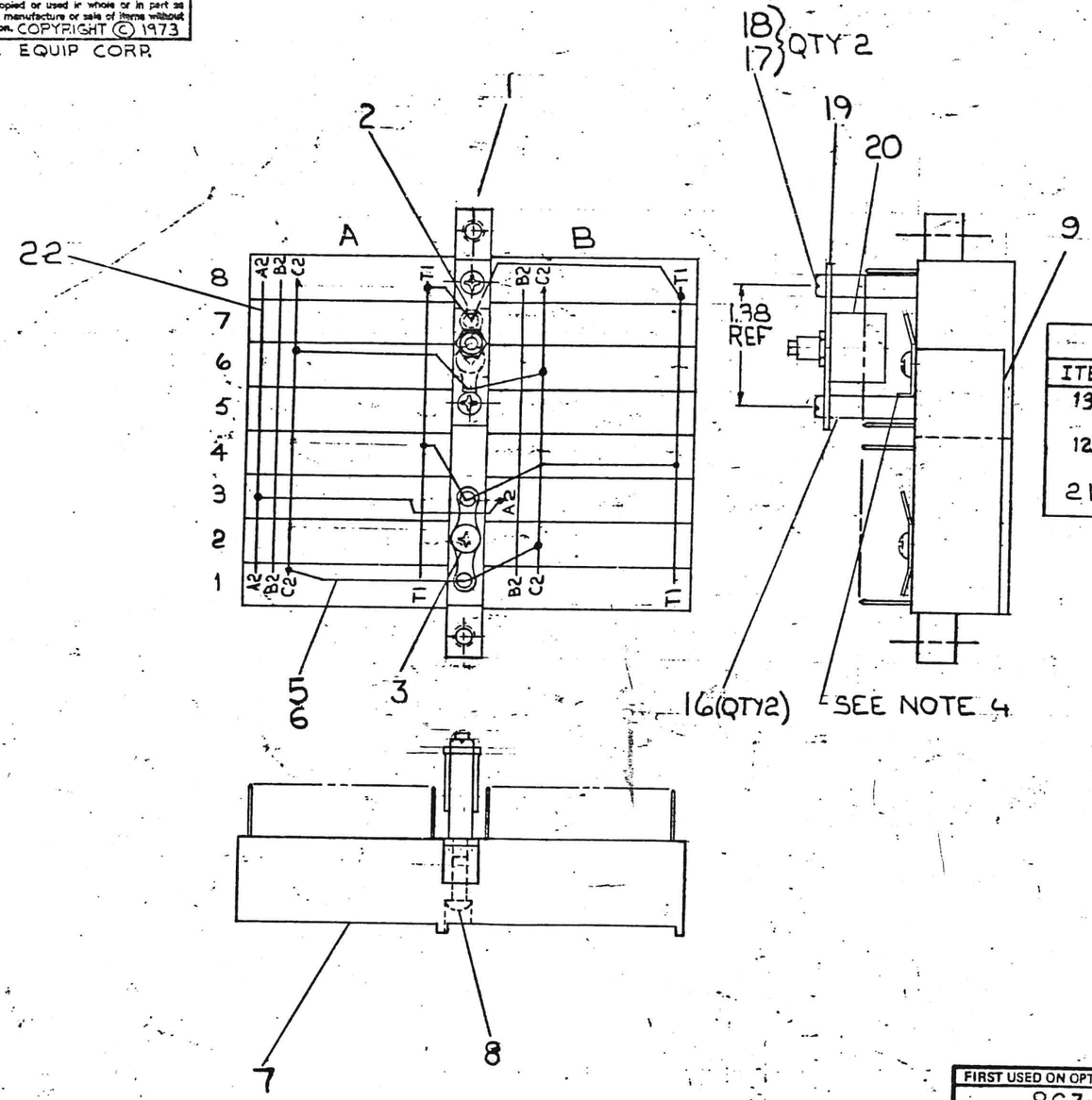

NOTES:

1. CONNECTIONS ON BUSSING ITEM #5 + #22 TO BE LOCATED AT MINIMUM PRACTICAL HEIGHT ABOVE BLOCKS.
2. USE YEL WIRE ITEM #10 FOR WRAPPING, PERFORMED PER WIRE LIST OF THIS DWG. USE ITEM #11 FOR TWP (NC HAND WRAP).
3. SLEEVE ITEMS 12, 13 & 21 WITH ITEM #23. AND THEN ATTACH ITEM #14.
4. BEND UP THIS END OF GND TAB (ITEM #2) TO ALLOW MTG. OF STANDOFF AT THIS LOCATION.

EXTERNAL COMPONENT TABLE

ITEM	COMP	POL	FROM	TO	POL	REMARKS
13	RES		B1D2	D2T1		390 Ω
12	RES		B1A2	B1D2		180 Ω
21	RES		BØ3A2	BØ3V2		1.8K Ω

CAUTION: OFF SHEETS PARTS EXISTS: REFER TO K-PL-7009632-0-DBP

FIRST USED ON OPTION/MODEL	QTY.	DESCRIPTION	PART NO.	ITEM NO.
863		PARTS LIST		

UNLESS OTHERWISE SPECIFIED DIMENSION IN INCHES. TOLERANCES

DECIMALS	ANGLES
.XXX = .005 .XX = .02 .X = .1	±0° 30'

REMOVE BURRS AND BREAK SHARP CORNERS SURFACE QUALITY ✓

MATERIAL: SEE PARTS LIST

FINISH

		DATE
DRN.	K. Damache	10/30/73
CHK'D.	[signature]	6-26-74
ENG.	[signature]	8/15/74
PROJ. ENG.	[signature]	9/6/74
PROD.	[signature]	9/6/74

NEXT HIGHER ASSY.: E-UA-863-0-0

SCALE 1/1

SHEET 1 OF 2

digital EQUIPMENT CORPORATION MAYNARD, MASSACHUSETTS

TITLE: WIRED ASSY (CHASSIS 863 P.C.)

SIZE	CODE	NUMBER	REV.
C	AD	7009632-0-0	C

DIST.

REVISIONS

CHK	CHANGE NO.	REV.
[illegible]	863-00003	A
	863-00005	B
	863-MR010	C

BRUNING 40-107 15968

DEC FORM NO. DRC 100-A

"THIS DRAWING AND SPECIFICATIONS, HEREIN, ARE THE PROPERTY OF DIGITAL EQUIPMENT CORPORATION AND SHALL NOT BE REPRODUCED OR COPIED OR USED IN WHOLE OR IN PART AS THE BASIS FOR THE MANUFACTURE OR SALE OF ITEMS WITHOUT WRITTEN PERMISSION.
COPYRIGHT © 1974, DIGITAL EQUIPMENT CORPORATION"

WIRE TABLE

ITEM NO	DESCRIPTION AWG	DESCRIPTION COLOR	FROM CONNECTION	TO CONNECTION	REMARKS SIGNAL NAME
10	30	YEL	A01C1	A01C2	GND
			A01C2	A01D1	
			A01D1	A01D2	
			A03E2	A03K1	
			A04C2	A04M2	
			B04C2	B04D2	
			B04D2	B04E2	
			B04E2	B04F2	
			B04F2	B04H2	
			B04H2	B04J2	
			B04J2	B04K2	
			B04K2	B04L2	
			B04L2	B04M2	
			B04M2	B04P2	GND
			A01A1	A01A2	+5 VOLTS
			A01A2	B01A1	
			B01A1	B01A2	
			A04A2	A04P2	
			A04A2	A04R1	+5 VOLTS
			B01V1	A02C1	+15 VOLTS
			A02C1	B02C1	+15 VOLTS
			A03F1	A04J2	PHASE 1A
			A03H1	A04K1	PHASE 1B
			A03J1	A04K2	PHASE 2A
			A03J2	A04L1	PHASE 2B
			A03E2	A04L2	PHASE 3A
			A03D2	A04M1	PHASE 3B
			B01M2	A04D1	18 VAC A
			B01K2	A04D2	18 VAC B
			B01L2	A04E1	3Ø VAC A
			B01U1	A04E2	3Ø VAC B
			B01H2	A04F1	3Ø VAC RTN
			A01N2	A04H1	+18V RAW
			A01P2	A04H2	+18V RAW
			B01T2	A04J1	+30V RAW
			A01E2	A04F2	-30V RAW
			A02L2	B03J2	AIR FLOW A (L)
			AØ2C1	AØ3C1	+15V
			BØ4A2	AØ5A2	+5V
			AØ2M2	BØ3V2	PWR UP (L)
			BØ3U2	BØ4N2	PWR LED (L)
			BØ2V1	BØ3V1	MST PWR ON (H)
			BØ2D2	BØ1D2	PWR WARNING (L)
			BØ3T1	BØ2F2	GND
			BØ1T1	BØ2V2	GND
10	30	YEL	SW1-NC	AØ2M2	RESET/PWR UP (L)

WIRE TABLE

ITEM NO	DESCRIPTION AWG	DESCRIPTION COLOR	FROM CONNECTION	TO CONNECTION	REMARKS SIGNAL NAME
10	30	YEL	B03J2	B04D1	AIR FLOW A (L)
			A02K2	B03L2	AIR FLOW B (L)
			B03L2	B04E1	AIR FLOW B (L)
			A02J2	B03M2	AIR FLOW C (L)
			B03M2	B04F1	AIR FLOW C (L)
			A02H2	B03N2	AIR FLOW D (L)
			B03N2	B04H1	AIR FLOW D (L)
			A02D2	B03R2	OVERTEMP (L)
			B03R2	B04J1	OVERTEMP (L)
			A02E2	B03S2	CKT BKR (L)
			B03S2	B04K1	CKT BKR (L)
			A02F2	B03T2	DOOR OPEN A (L)
			B03T2	B04L1	DOOR OPEN A (L)
			A02B1	B04M1	DOOR OPEN B (L)
			A01R2	SW1-C	POWER UP (L)
			A02N2	B03A1	PWR REQUEST (L)
			B03A1	B04P1	PWR REQUEST (L)
			A02U2	B04N1	FAULT (L)
			A02A1	A03U1	AC LOW (H)
			A02P2	A03K2	OVERRIDE (L)
			A03K2	B03U1	OVERRIDE (L)
10		YEL	B03U1	B04R1	OVERRIDE (L)
11		BLK/WHT TWP	B02L2	B04S1	CROBAR (L)
			B02V2	B04S2	CROBAR RTN
		BLK/WHT TWP	B02D2	B04U1	PWR WARNING (L)
			B02F2	B04U2	PWR WARNING RTN
		BLK/WHT TWP	A02R2	B04V1	PWR DOWN (L)
11			A02V2	B04V2	PWR DOWN RTN
10		YEL	B01V2	A04P1	+5V DRIVE
10			A01U2	A04N1	+18V
10			A01V2	A04N2	+18V
10	30	YEL	A04N1	A04N2	+18V
12¢14			B01A2	B01D2	+5V
13¢14			B01D2	B02T1	GND

REVISIONS		
REV.	CHANGE NO.	CHK

FIRST USED ON OPTION/MODEL	QTY.	DESCRIPTION	PART NO.	ITEM NO.
863		PARTS LIST		

UNLESS OTHERWISE SPECIFIED DIMENSION IN INCHES
TOLERANCES
DECIMALS: .xxx = .005, .xx = .02, .x = .1
ANGLES: ±0° 30'
REMOVE BURRS AND BREAK SHARP CORNERS SURFACE QUALITY √

		DATE
DRN.	Mackie	
CHK'D.	L Sullivan Lawson	
ENG.	W Provident	8/15/74
PROJ. ENG.	Vinod Arora	9/4/74
PROD.	Ray Lemire	9/6/74

MATERIAL: SEE PARTS LIST
FINISH: — / —
NEXT HIGHER ASSY.: E-UA-863-0-0
SCALE: NONE
SHEET 2 OF 2

digital EQUIPMENT CORPORATION MAYNARD MASSACHUSETTS

TITLE: WIRED ASSY (CHASSIS 863 P.C.)

SIZE	CODE	NUMBER	REV.
C	AD	7009632-0-0	C

DIST.

SIZE C CODE AD NUMBER 7009632-0-0 REV. C

DEC FORM NO. DRC 100-B

AUTOMATED BY PRTLST,3P(44) P A R T S L I S T SHEET A1 OF A2

LINE	ITEM	DOCUMENT NUMBER	PART NUMBER	DESCRIPTION	QUANTITY PER VARIATION 00	01
1	1	D-CS-7009878-0-1		*** THIS ITEM IS NOT USED ***	-	-
2	2	E-IA-7411731-0-0	7411731-00	BOX CAPACOTOR (70-9475)	2	2
3	3	D-IA-7411867-0-0	7411867-00	PLATE BUSS KL10 (70-9878)	1	1
4	4	D-IA-7411868-0-0	7411868-00	PLATE TOP BUSS KL10 (709878)	1	1
5	5		9006037-02	SCREW,FLAT,PHIL, 8-32X 3/8	12	12
6	6	C-MD-7411873-0-0	7411873-00	PLATE PROT KL10 (70-9878)	1	-
7	7	C-IA-7411829-0-0	7411829-00	PLATE MTG CAP BOX KL10 (70-9878)	3	-
8	8		1011479-00	300,000 MFD 15V +75-10% AL EL	13	13
9	9		1300158-00	4.0 53.0 W10.0 % WW	4	4
10	10		9006035-01	SCREW,PAN,PHIL 8-32X 1/4 SS	8	8
11	11		9006070-01	*** THIS ITEM IS NOT USED ***	-	-
12	12	B-MD-7412614-0-0	7412614-00	STANDOFF MALE-FEMALE RWRK (KL10)	13	13
13	13		9008208-01	SCREW, NYLON, SLTD PAN HD, 8-32	5	5
14	14		9006073-01	*** THIS ITEM IS NOT USED ***	-	-
15	15		9006635-00	WASHER,LOCK,INT,.3100D X .200ID	26	26
16	16		9006037-01	SCREW,PAN,PHIL 8-32X 3/8 SS	15	15
17	17		9006634-00	WASHER,LOCK,INT,.2300D X .172ID	18	18
18	18	C-IA-7412340-0-0	7412340-00	HOLDDOWN CAPACITOR KL10 (70-9878	1	1
19	19		9006563-00	NUT,KEP 8-32X 11/13AF	5	5
20	20		9107370-22	WIRE,STRND,14AWG,IPVC UL1534	A/R	A/R
21	21		9107370-00	WIRE,STRND,14AWG,IPVC UL1534	A/R	A/R
22	22		9007928-00	TERM,RING #10STUD CRIMP 14-1	2	2
23	23		9006021-01	SCREW,PAN,PHIL 6-32X 5/16 SS	2	2
24	24		9006633-00	WASHER,LOCK,INT,.2800D X .146ID	2	2
25	25		9009255-00	LABEL, POWER SUPPLY, 2-15/16 " L	1	1
26	26	B-MD-7410941-0-0	7410941-00	CABLE STRAIN RELIEF KL10 (70-987	1	1
27	27	B-DC-5308754-0-0	5308754-00	DECAL	1	1
28	28		9007046-00	GROMMET #3 GS-3	A/R	A/R
29	29		9009102-00	FOAM, POLYURETHANE, 3/8 THK, X 1	A/R	A/R
30	30	C-MD-7411873-0-0	7411873-01	PLATE PROTECTOR	-	1

REVISION HISTORY			BASIC PART NO: 7009878
ENG	ECO NUMBER	REV	SECTION A OF A
BW	7009878-MR004	E	SECTION, VARIATION INDEX
			[A] 00,01
			[B]
			[C]
			[D]
			[E]
			[F]

DRN: V. SOUZA	DATE: 26-MAR-74		D I G I T A L
CHK'D: D. HEALEY	DATE: 10-MAY-74	TITLE	PARTS LIST
			CAPACITOR BOX ASSY
DES,ENG: J. PROVIDENT	DATE: 19-AUG-74		
RESP,ENG: J. PROVIDENT	DATE: 19-SEP-74	DOCUMENT NUMBER	
		SIZE: K	CODE: PL
MFG,ENG: R. BOWER	DATE: 1-OCT-74	NUMBER: 7009878-0-DBP	REV: E
ASSEMBLY NUMBER: E-AD-7009878-0-0	TOP DOCUMENT NUMBER: SB-DD-KL10-0	FILE NAME: Z2733E,PLS	EDIT #: 9

"THIS DRAWING AND SPECIFICATIONS HEREIN, ARE THE PROPERTY OF DIGITAL EQUIPMENT CORPORATION AND SHALL NOT BE REPRODUCED OR COPIED OR USED IN WHOLE OR IN PART AS THE BASIS FOR THE MANUFACTURE OR SALE OF ITEMS WITHOUT WRITTEN PERMISSION. COPYRIGHT (C) 1981, DIGITAL EQUIPMENT CORPORATION "

AUTOMATED BY PRTLST,3P(44)

P A R T S L I S T

LINE	ITEM	DOCUMENT NUMBER	PART NUMBER	DESCRIPTION	QUANTITY PER VARIATION 00	01
31	31	C-IA-7414615-0-0	7414615-00	MOUNTING PLATE, CAPACITOR BOX	-	3
32	32		9006071-03	SCREW,TRUS,PHIL, 10-32X 3/8	13	13
33	33		9006073-03	SCREW,TRUS,PHIL, 10-32X 1/2	13	13

DIGITAL	TITLE	SIZE	CODE	DOCUMENT NUMBER	REV
	CAPACITOR BOX ASSY	K	PL	7009878-0-DBP	E
	SECTION A OF A				

THIS DRAWING AND SPECIFICATIONS, HEREIN, ARE THE PROPERTY OF DIGITAL EQUIPMENT CORPORATION AND SHALL NOT BE REPRODUCED OR COPIED OR USED IN WHOLE OR IN PART AS THE BASIS FOR THE MANUFACTURE OR SALE OF ITEMS WITHOUT WRITTEN PERMISSION.
COPYRIGHT © , DIGITAL EQUIPMENT CORPORATION
APRIL 5, 1974

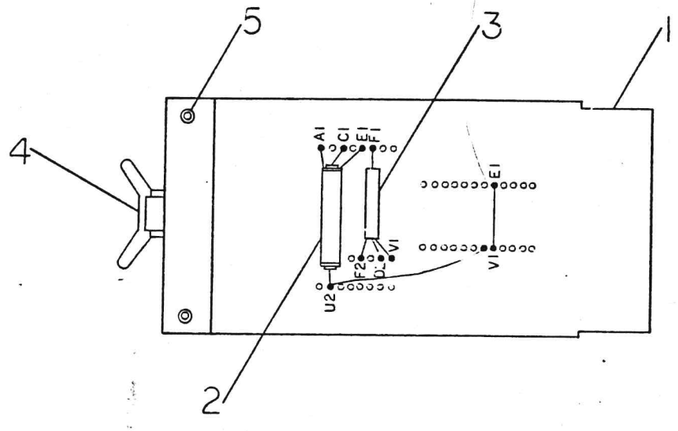

NOTES:

1. MODIFIED CONNECTOR BOARD LOCATED IN SLOT B2Ø.
2. REMOVE EXISTING HANDLE THAT IS LOCATED ON W96ØA BOARD AND REPLACE WITH MAGENTA FLIP-CHIP (ITEM #4).
3. STAMP P/F ON TOP OF FLIP-CHIP HANDLE AND STAMP #7009879 ON REAR OF HANDLE.

QTY.	DESCRIPTION	PART NO.	ITEM NO.
2	EYELETS #A-94 STIMPSON	9006741	5
1	HANDLE, FLIP-CHIP, MAGENTA	9009337-06	4
1	5V RELAY	1209759	3
1	12V RELAY	1203028	2
1	CONNECTOR BOARD	W96ØA	1

PARTS LIST

FIRST USED ON OPTION/MODEL: LT73-AF,-AH

UNLESS OTHERWISE SPECIFIED DIMENSION IN INCHES
TOLERANCES
DECIMALS: .xxx = .005, .xx = .02, .x = .1
ANGLES: ±0 30'
REMOVE BURRS AND BREAK SHARP CORNERS SURFACE QUALITY ▽

MATERIAL: —
FINISH: —

	NAME	DATE
DRN.	[illegible]	[illegible]
CHK'D.	[illegible]	4-18-74
ENG.	[illegible]	4-13-74
PROJ. ENG.	[illegible]	4-13-74
PROD.	[illegible]	4-18-74

NEXT HIGHER ASSY.: C-UA-LT73-0-0
SCALE: NONE
SHEET 1 OF 1

digital EQUIPMENT CORPORATION MAYNARD MASSACHUSETTS

TITLE: POWER FAIL RELAY BOARD

SIZE C | CODE IA | NUMBER 7009879-0-0 | REV. —

DIST.

REVISIONS		REV.
CHK	CHANGE NO.	
—	LT73-00004	—
	ORIGINATED	

DEC FORM NO. DRC 100-B

D C B A

4 3 2 1

THE DRAWINGS AND SPECIFICATIONS, HEREIN, ARE THE PROPERTY OF DIGITAL EQUIPMENT CORPORATION AND SHALL NOT BE REPRODUCED OR COPIED OR USED IN WHOLE OR IN PART AS THE BASIS FOR MANUFACTURE OR SALE OF ITEMS WITHOUT WRITTEN PERMISSION.
COPYRIGHT ©1975, DIGITAL EQUIPMENT CORPORATION

NOTES:
1. LOCATE DECALS (ITEM # 5 6) APPROX AS SHOWN.
2. PLACE DECAL AFTER ASS OF OUTLETS (ITEM # 7).

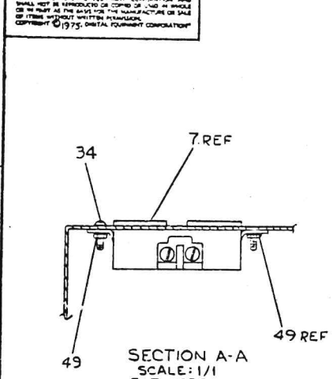

SECTION A-A
SCALE: 1/1
5 PLACES

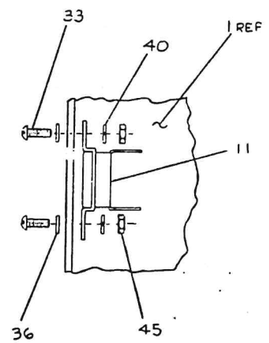

DETAIL-A
SCALE 2/1

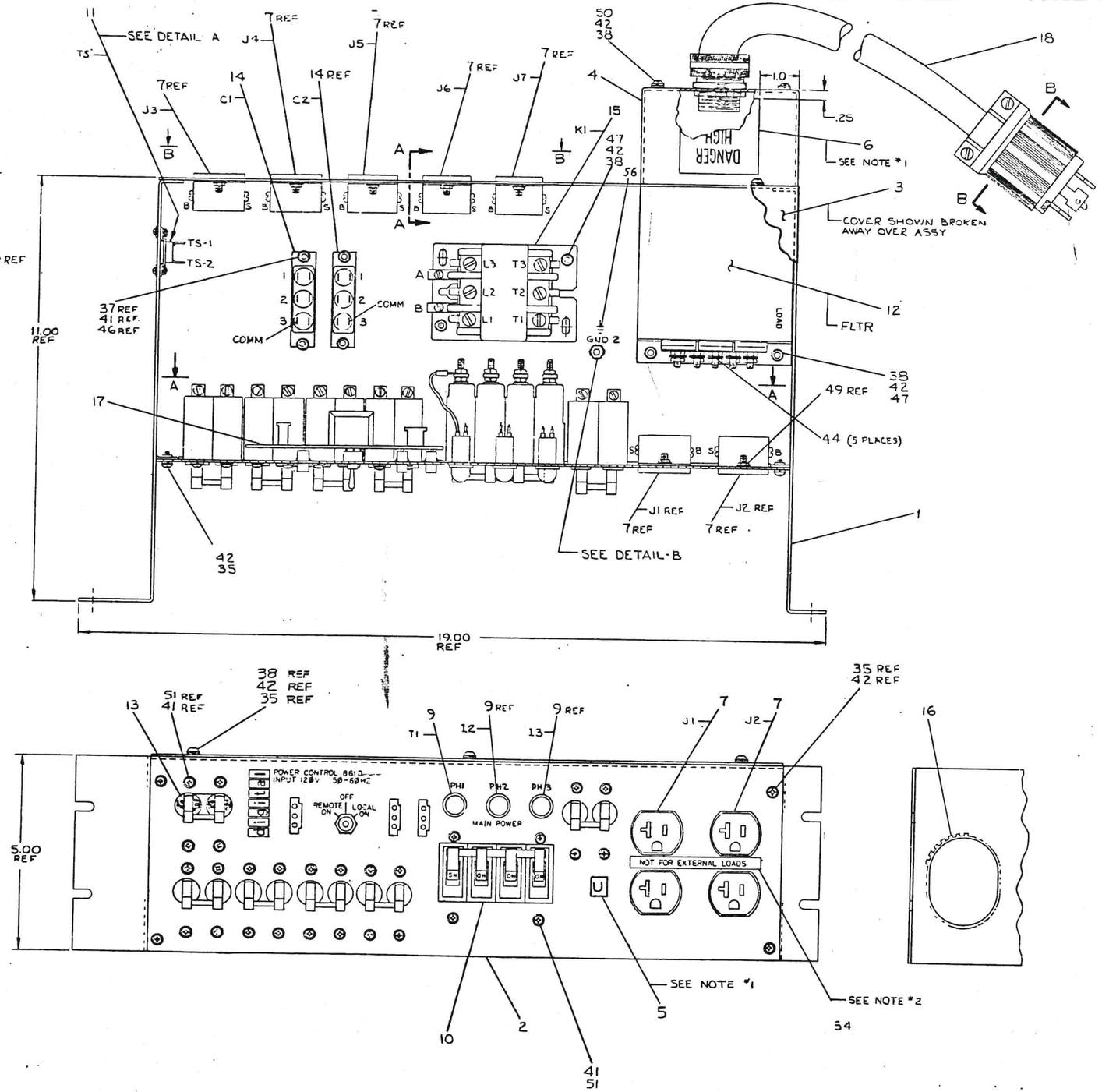

FOR PARTS LIST SEE:
K-PL-861-D-DBP

REVISIONS			
DIM	CHANGE NO.	REV.	
1.1	861-D-00001	A	
		B	
		C	
		D	
		E	
		F	
		G	
		H	
		J	
	861-D-01079	K	18 MAY 83

J. DREW
S. KID... 5/4/77
J. HUNDT 5/4/77
D. KENNEY 5/4/77
861D-00001 L
S. KENNEY 24 JAN 79
861-D-00077 F
A. KENNEDY 7 JAN 81
861-D-01400 H
L. OTHICK
861-D-01079 J
Eng. Release 10 APR 81
A. BARON
861-D-01400 K
18 MAY 83
B. O'SULLIVAN

DESCRIPTION	DWG PART NO.	ITEM NO.
UNLESS OTHERWISE SPECIFIED DIMENSIONS ARE IN INCHES		

ANGLES ±30'
SURFACE QUALITY 125 MICROINCHES
CLASS OF ACCURACY (CHECK ONE): MEDIUM / PREFERRED

NOMINAL DIMENSION RANGE INCHES					
0 TO 6	OVER 6 TO 30	OVER 30 TO 120	OVER 120 TO 315	OVER 315 TO 1000	OVER 1000 TO 2500
.03	.06	.12	.25	.50	1.00
.01	.02	.03	.06	.12	.25
.005	.008	.012	.016	.020	.040
.002	.003	.004	.006	.008	.016

QUANTITY & VARIATION

THIRD ANGLE PROJECTION

REMOVE BURRS AND BREAK SHARP CORNERS

DO NOT SCALE DWG

MATERIAL SEE PARTS LIST

DRN
CHKD
ENG.
PROJ. ENG.
PROD.

FIRST USED ON: 861-D

TITLE: 861-D POWER CONTROL ASSY

NEXT HIGHER ASSY.: 70-00861-D

SIZE: B | CODE | NUMBER | REV

861-D-00 | REV A | SHEET B

© 1977 DIGITAL EQUIPMENT CORPORATION

ITEM NO	DESCRIPTION COLOR	AWG	FROM CONNECTION	WITH	TO CONNECTION	WITH	REMARKS
22	BLU	10	HARNESS 1 -1		K1 - T3		
	BLK		-2		K1 - T1		
	RED		-3		K1 - T2		
	RED		-4		CB7-C-LOAD		
	BLK		-5		CB7-D-LOAD		
	BLU	10	HARNESS 1 -6		CB7-B-LOAD		
23	RED	10	HARNESS 3 -1		CB7-C-LINE		
	BLK		-2		CB7-D-LINE		
	BLU		-3		CB7-B-LINE		
	WHT		-4		CB7-A-LINE		
	GRN		-5		GND #2		
	WHT		-6		FLTR-LOAD-NEUT		
	GRN		-7		FLTR-LOAD-GND		
	BLK		-8		FLTR-LOAD-PH1		
	BLU		-9		FLTR-LOAD-PH3		
	RED	10	HARNESS 3-10		FLTR-LOAD-PH2		
24	BLK	14	HARNESS 5 -1		CB2-B-LINE		
	BLK		-2		CB7-D-LOAD		
	WHT		-3		CB2-A-LINE		
	WHT		-4		CB7-A-LOAD		
	BLU		-J1		PLT CONT-J6		
	WHT		-7/8		CB7-A-LOAD		
	WHT		-9		CB6-A-LINE		
	RED		-10		CB5-B-LINE		
	WHT		-11		CB5-A-LINE		
	WHT/BLU		-J2		PLT CONT-J5		
	RED		-14		CB4-B-LINE		
	WHT		-15		CB4-A-LINE		
	BLU		-16		CB1-B-LINE		
	WHT		-17		CB1-A-LINE		
	BLU		-18		CB3-B-LINE		
	WHT		-19		CB3-A-LINE		
	WHT		-20/21		CB7-A-LOAD		
	WHT		-22/23		CB7-A-LOAD		
	BLU		-24		C1-1		
	BLU		-25		K1-L3		
	BLU		-26				
	BLU		-27				
	RED		-28		C2-1		
	RED		-29		K1-L2		
	RED		-30				
	RED		-31				
	BLK		-32		C1-2		
	BLK		-33		K1 - L1		
	BLK		-34				
	WHT		-35		C2-3		
	BLU		-36		K1-B		
	RED		-37		K1-A		
	WHT		-38		CB7-A-LOAD		
	BLK		-39		CB4-B-LINE		
	BLU		-40		CB7-B-LOAD		
	RED	14	HARNESS 5-42		CB7-C-LOAD		
9	BLK	22	J1- BLK		CB7-A-LINE		
	RED	22	J1- RED		CB7-D-LINE		
9	BLK	22	J2- BLK		CB7-A-LINE		
	RED	22	J2- RED		CB7-C-LINE		
9	BLK	22	J3- BLK		CB7-A-LINE		
	RED	22	J3- RED		CB7-B-LINE		

CONNECTION CHART

ITEM NO	DESCRIPTION COLOR	AWG	FROM CONNECTION	WITH	TO CONNECTION	WITH	REMARKS
25	WHT	14	HARNESS 6 -1		J7-S		
	BLK		-2		J7-B		
	WHT		-3		J6-S		
	RED		-4		J6-B		
	WHT		-5		J5-S		
	RED		-6		J5-B		
	WHT		-7		J4-S		
	BLU		-8		J4-B		
	WHT		-9		J3-S		
	BLU		-10		J3-B		
	WHT		-11		CB1-A-LOAD		
	BLU		-12		CB1-B-LOAD		
	WHT		-13		CB3-A-LOAD		
	BLU		-14		CB3-B-LOAD		
	WHT		-15		CB4-A-LOAD		
	RED		-16		CB4-B-LOAD		
	WHT		-17		CB5-A-LOAD		
	RED		-18		CB5-B-LOAD		
	WHT		-19		CB6-A-LOAD		
	BLK	14	HARNESS 6 -20		CB6-B-LOAD		
26	WHT	14	HARNESS 8-P1		PLT CONT-J4		
	WHT	14	HARNESS 8-3		TS-1		
	WHT	14	HARNESS 8-4		TS-2		
28	GRN	10	GND #1		GND #2		
29	WHT	14	C1-3		C2-3		
30	WHT	14	J1-S		J2-S		
31	GRN	14	PLT CONT-J7		GND #1		
32	BLK	14	J1-B		J2-B		
18	BRN	10	FLTR-LINE-PH1		PLUG - X		
	BLK		FLTR-LINE-PH2		PLUG - Y		
	BLK		FLTR-LINE-PH3		PLUG - Z		
	BLU		FLTR-LINE -NEUT		PLUG -W		
	GRN/YEL	10	FLTR-LINE-GND		PLUG - G		
8	—	—	K1-A	52	K1-B	52	

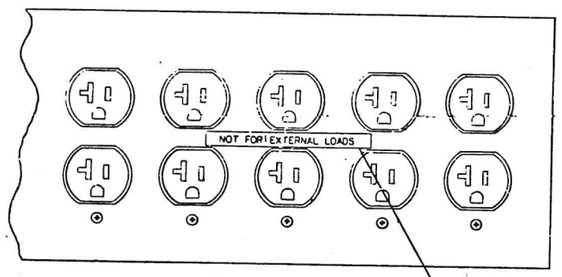

VIEW B-B

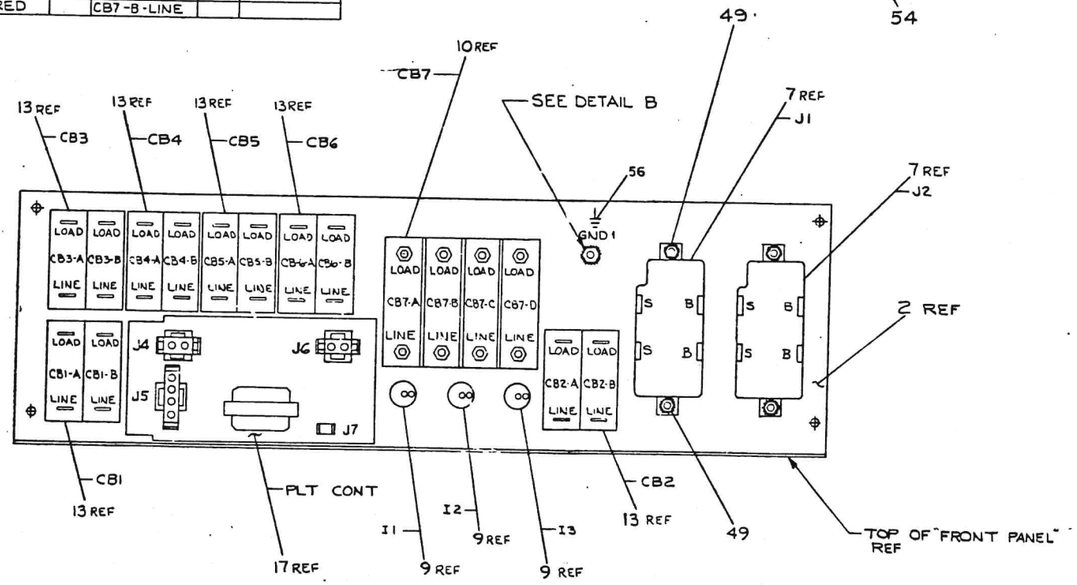

VIEW A-A

NOTES FOR WIRING:
1. FOR HARNESS POINT NUMBERS, REFER TO HARNESS DWG.

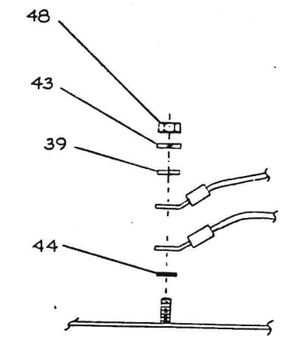

DETAIL B
TYPICAL FOR "GND 1" & "GND 2"

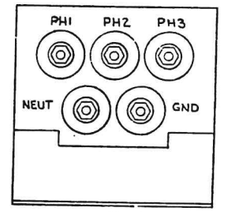

FILTER
(ITEM 12)
LOAD SIDE

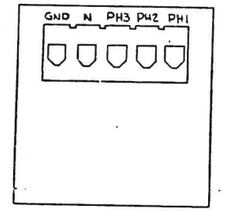

FILTER
(ITEM 12)
LINE SIDE

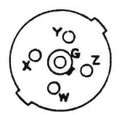

SECTION B-B
SCALE: NONE
"TWIST LOCK PLUG" (ITEM 21)

			DESCRIPTION	DWG PART NO.	TDM NO.	
			UNLESS OTHERWISE SPECIFIED DIMENSIONS ARE IN INCHES			
			ANGLES ±0°30'	LEADS OF ACCURACY (CHECK ONE)	NOMINAL 2 PLACE DECIMAL RANGE NOTES	
			SURFACE QUALITY 125 MICROINCHES	MEDIUM ☐	.00 0 to 3	.0 3 to 12	.00 12 to 48	.0 48 to 120	.0 120 to 300
				PREFERRED ☐	±.004	±.008	±.012	±.016	±.024
					±.012	±.016	±.020	±.024	±.030
			QUANTITY & VARIATION		±.1	±.2	±.3	±.4	±.6
			THIRD ANGLE PROJECTION	DRN	11/4/77	FIRST USED ON			
				CHK'D		861-D			
				ENG		TITLE			
			REMOVE BURRS AND BREAK SHARP CORNERS	PROJ ENG		861-D POWER CONTROL ASSY			
			DO NOT SCALE DWG	PROD	11/4/77				
				NEXT HIGHER ASSY					
			MATERIAL			SIZE E	CODE 01A	NUMBER 861-D-0	REV. K
				SCALE 1/1					

COPYRIGHT © 1982 DIGITAL EQUIPMENT CORPORATION

NO.	POINT	CONN. (REF)	CONNECTION	
4	29	—	ANODE ITEM 13 LED 2	
4	31	—	CATHODE	2
4	32	—	ANODE	1
4	30	—	CATHODE ITEM 13 LED 1	

7020310-00 | AS SHOWN | A1

NOTES:
1 MOUNTING HARDWARE SUPPLIED WITH ITEM 13

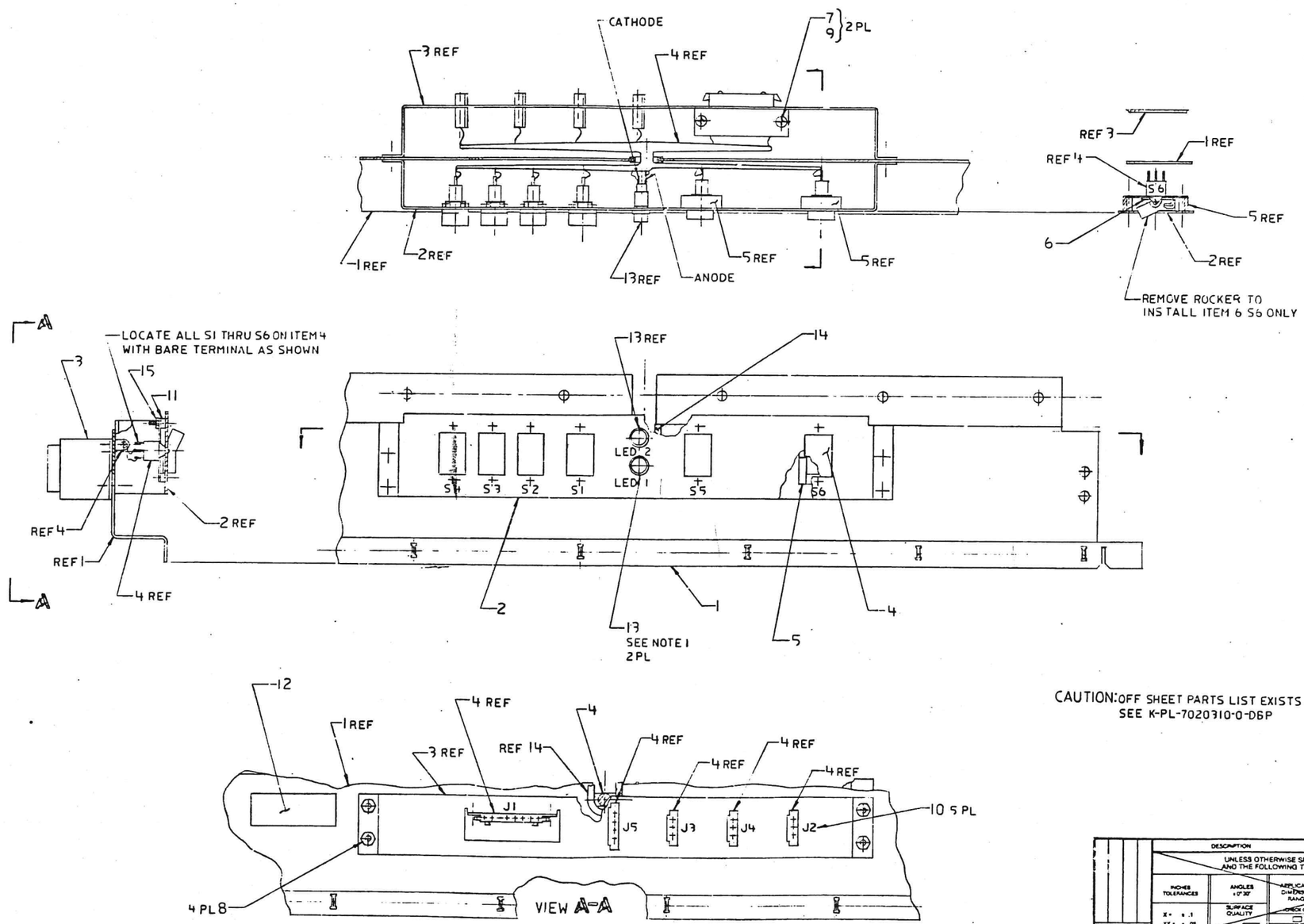

CAUTION: OFF SHEET PARTS LIST EXISTS
SEE K-PL-7020310-0-DBP

DESCRIPTION	DRAWING NO.	PART NO.	ITEM NO.

UNLESS OTHERWISE SPECIFIED DIMENSIONS ARE IN INCHES AND THE FOLLOWING TOLERANCES APPLY (PER DEC STD 114)

INCHES TOLERANCES: X = ± .1, .XX = ± .02, .XXX = ± .005
ANGLES ± 0° 30'
SURFACE QUALITY
MICROINCHES
APPLICABLE DIMENSION RANGE (CHECK ONE)
DIMENSION RANGE IN INCHES: OVER 0 TO 0.2; OVER 0.2 TO 1.2; OVER 1.2 TO 4.0; OVER 4.0 TO 12.0; OVER 12.0 TO 40.0; OVER 40.0 TO 80.0
QUANTITY & VARIATION

THIRD ANGLE PROJECTION
DO NOT SCALE DRAWING
REMOVE BURRS AND BREAK SHARP CORNERS
MATERIAL
FINISH

DRN W FAULSTICH — DATE 9/21/82
CHK'D J. HUSON — DATE 20 JUN 83
DES. ENG. — DATE 20 JUN 83
PROJ. ENG. — DATE
MFG. ENG. — DATE
NEXT HIGHER DOC. E-AD-7020327-0-0

TITLE: PANEL ASSY, SWITCH

DOCUMENT NUMBER: SIZE E — CODE AD — NUMBER 7020310-0-0 — REV A
SCALE — SHEET

REVISION HISTORY: DATE | ECO NUMBER | REV

AUTOMATED BY PRTLST.5R(52)

P A R T S L I S T

SHEET A1 OF A1

LINE	ITEM	TOP DOCUMENT	PART NUMBER	MIN REV	DESCRIPTION		QTY PER VARIATION 00 A1
1	1	E-MD-7426453-0-0	7426453-01	A	SHIELD CONTROL DOUBLE		1
2	2	D-IA-7426474-0-0	7426474-01	A	PLATE,SWITCH MOUNTING		1
3	3	D-IA-7426473-0-0	7426473-01	A	PLATE,CONNECTOR MOUNTING		1
4	4	E-IA-7020315-0-0	7020315-00		SWITCH PANEL HARNESS		1
5	5	B-MD-7414143-0-0	7414143-00		SPACER		2
6	6	B-MD-7413680-0-0	7413680-00		SWITCH LOCK		1
7	7		9006560-00	A	NUT,HEX EXT TOOTH LCKWSHR	6-32	2
8	8		9006563-00	A	NUT,HEX EXT TOOTH LCKWSHR	8-32	4
9	9		9006022-01	A	SCREW,MACH PAN PHIL	6-	2
10	10		7409873-01		PWR CONN DECAL WHITE ON CLEAR		1
11	11		9009283-00	A	SPACER,CLEAR HOLE HEX ALUM	6	8
12	12		9009255-03	B	LABEL,P.S./SUB.ASSY ID		11
13	13		1212749-00		LIGHT,PNL INDICATOR,LED,RED		2
14	14		9009533-00	A	CHANNEL"U"EXTRUDED RUBBER		A/R
15	15		9006557-00	A	NUT,HEX EXT TOOTH LCKWSHR	4-40	12

REVISION HISTORY			BASIC PART NO: 7020310				
ENG	ECO NUMBER	REV	SECTION A OF A				
	INITIAL	A	SECTION.VARIATION INDEX [A]00	DRN: W. FAULSTICH	DATE: 09-JUN-83	D I G I T A L	
			[B]	CHK'D: JEFF HUSTON	DATE: 09-JUN-83	TITLE PARTS LIST PANEL ASSY SWITCH	
			[C]	DES.ENG: ROGER SCOTT	DATE: 09-JUN-83	DOCUMENT NUMBER	
			[D]	RESP.ENG.: ROGER SCOTT	DATE: 09-JUN-83	SIZE: K CODE: PL NUMBER: 7020310-0-DBP REV: A	
			[E]	MFG.ENG.: SUE ALMEIDA	DATE: 09-JUN-83	RELEASE DATE:	
			[F]	ASSEMBLY NUMBER:	TOP DOCUMENT NUMBER:	FILE NAME: Z6857A.PLS	EDIT #: 5

"THIS DRAWING AND THE SPECIFICATIONS CONTAINED HEREIN ARE CONFIDENTIAL AND PROPRIETARY. THEY ARE THE PROPERTY OF DIGITAL EQUIPMENT CORPORATION AND SHALL NOT BE REPRODUCED OR COPIED OR USED IN WHOLE OR IN PART AS THE BASIS FOR THE MANUFACTURE OR SALE OF ITEMS WITHOUT WRITTEN PERMISSION. THIS IS AN UNPUBLISHED WORK PROTECTED UNDER THE FEDERAL COPYRIGHT LAWS."

MR

"THIS DRAWING AND SPECIFICATIONS, HEREIN, ARE THE PROPERTY OF DIGITAL EQUIPMENT CORPORATION AND SHALL NOT BE REPRODUCED OR COPIED OR USED IN WHOLE OR IN PART AS THE BASIS FOR THE MANUFACTURE OR SALE OF ITEMS WITHOUT WRITTEN PERMISSION. COPYRIGHT © 1974, DIGITAL EQUIPMENT CORPORATION"

WIRE TABLE

ITEM NO	DESCRIPTION AWG	COLOR	FROM CONN	FROM TERM	TO CONN	TO TERM
9	22	BLK	S1-G	10 & 11	S2-G	10 & 11
9		BLK	S3-G	10 & 11		
9		BLK			S4-G	10 & 11
9		BLK	J1-2	6		
9		BLK			J1-1	6
8		ORN	S1-P	10 & 11	S2-P	10 & 11
8		ORN	S3-P	10 & 11		
8		ORN			S4-P	10 & 11
8		ORN	J1-3	6		
7		YEL	S1-L	10 & 11	S2-L	10 & 11
7		YEL	S3-L	10 & 11		
7		YEL			S4-L	10 & 11
7	22	YEL	J1-4	6		

NOTES:
1. SWITCH MOUNTING HARDWARE SUPPLIED WITH VANE SWITCH.

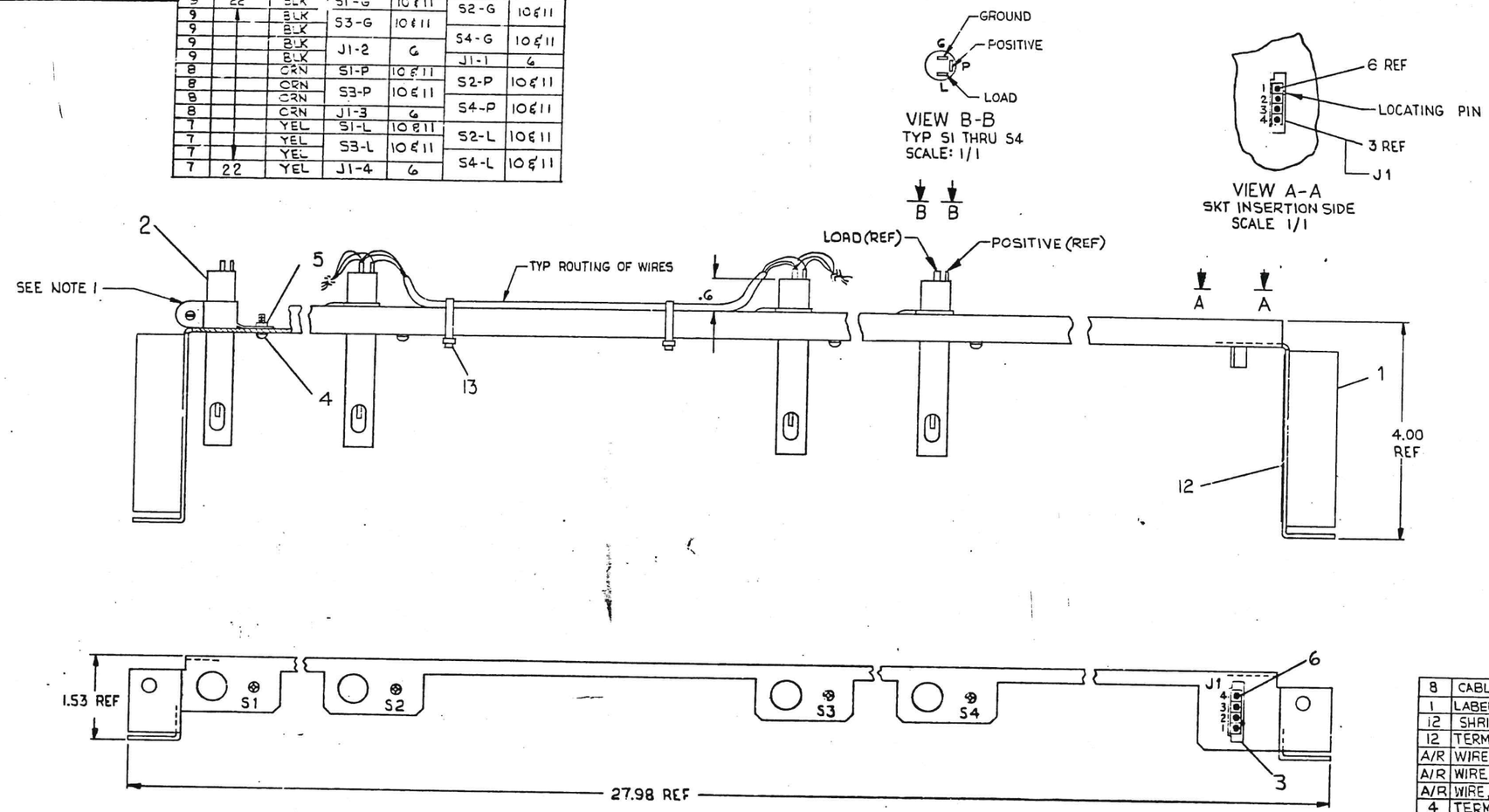

QTY.	DESCRIPTION	PART NO.	ITEM NO.
8	CABLE TIES	9007032	13
1	LABEL ADHESIVE BACK	9009255	12
12	SHRINKABLE TUBING	9107305-02	11
12	TERMINAL QUICK CONNECT	9009137-01	10
A/R	WIRE, 22 AWG STRD (BLK)	9107350-00	9
A/R	WIRE, 22 AWG STRD (ORN)	9107350-33	8
A/R	WIRE, 22 AWG STRD (YEL)	9107350-44	7
4	TERMINAL SKT CONTACT	1209379-06	6
4	NUT, KEP 6-32	9006560	5
4	SCR., PH. HD. PAN 6-32*.38	9006022-1	4
1	CONN SKT HSG 4 PIN	1209350-04	3
4	VANE SWITCH SPST N.O.	1211603	2
1	BRACKET, SWITCH	D-MD-7411372-0-0	1

PARTS LIST

FIRST USED ON OPTION/MODEL: KLIØ

DIMENSIONAL TOLERANCE: DIMENSIONS ARE INCHES UNLESS OTHERWISE SPECIFIED

MILLIMETERS	INCHES	ANGLES
X.XX = ±0.10	.XXX = ±.005	±0° 30'
X.X = ±0.5	.XX = ±.02	
X = ±2	.X = ±.1	

THIRD ANGLE PROJECTION

REMOVE BURRS AND BREAK SHARP CORNERS SURFACE QUALITY ✓

MATERIAL: SEE PARTS LIST

FINISH

DRN. M. Cochran DATE 3-9-74
CHK'D. DATE 3/12/74
ENG. DATE 3/12/74
PROJ. ENG. DATE 3/12/74
PROD. DATE 3/12/74
NEXT HIGHER ASSY. D-UA-KLIØ-Ø-Ø
SCALE 1/1
SHEET 1 OF 1

digital

TITLE: VANE SWITCH ASSY.

SIZE	CODE	NUMBER	REV.
D	AD	7009876-0-0	A

DIST.

REVISIONS

LTR	CHANGE NO.	REV.
	7009876-00001	A

J. PROVIDENT

	REV	VARIATION
7020381-00	A1	AS SHOWN

NOTES:

1 REMOVE EXISTING ITEM AND REPLACE WITH ITEM 8.

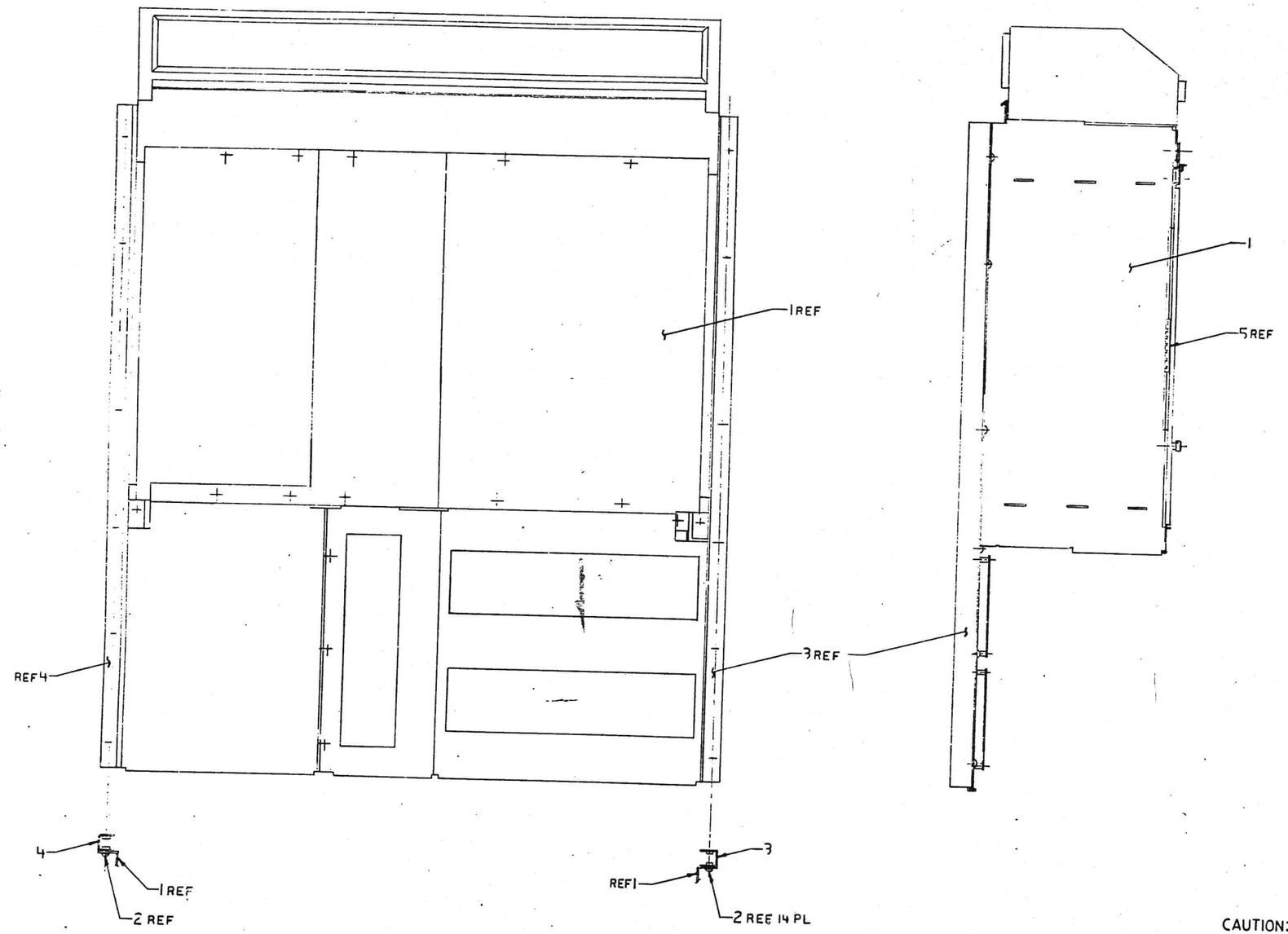

CAUTION: OFF SHEET PARTS LIST EXISTS
SEE K-PL-7020381-0-DBP

DESCRIPTION	DRAWING NO.	PART NO.	ITEM NO.

UNLESS OTHERWISE SPECIFIED DIMENSIONS ARE IN INCHES AND THE FOLLOWING TOLERANCES APPLY (PER DEC STD 114)

INCHES TOLERANCES	ANGLES ±0°30'	APPLICABLE DIMENSION RANGE	DIMENSION RANGE IN INCHES					
X = ±.1	SURFACE QUALITY	CHECK CHKD	OVER 0 TO 0.3	OVER 0.3 TO 1.2	OVER 1.2 TO 4.0	OVER 4.0 TO 12.0	OVER 12.0 TO 48.0	OVER 48.0 TO 60.0
XX = ±.02			±.02	±.02	±.02	±.05	±.10	
XXX = ±.005			±.004	±.008	±.012	±.016	±.024	±.04

QUANTITY & VARIATION

THIRD ANGLE PROJECTION

DO NOT SCALE DRAWING

REMOVE BURRS AND BREAK SHARP CORNERS

MATERIAL

DRN	W FAULSTICH	DATE	9/17/82
CHKD	R. Scott	DATE	2 Aug 83
DES. ENG.	[illegible]	DATE	2 Aug 83
REVIEWED	[illegible]	DATE	2 Aug 83
MFG.	[illegible]	DATE	

TITLE

digital

LOGIC ASSY
RH20/DTE20

DOCUMENT NUMBER

SIZE | CODE | NUMBER | REV.

REVISION HISTORY | ECO NUMBER | DATE | REV

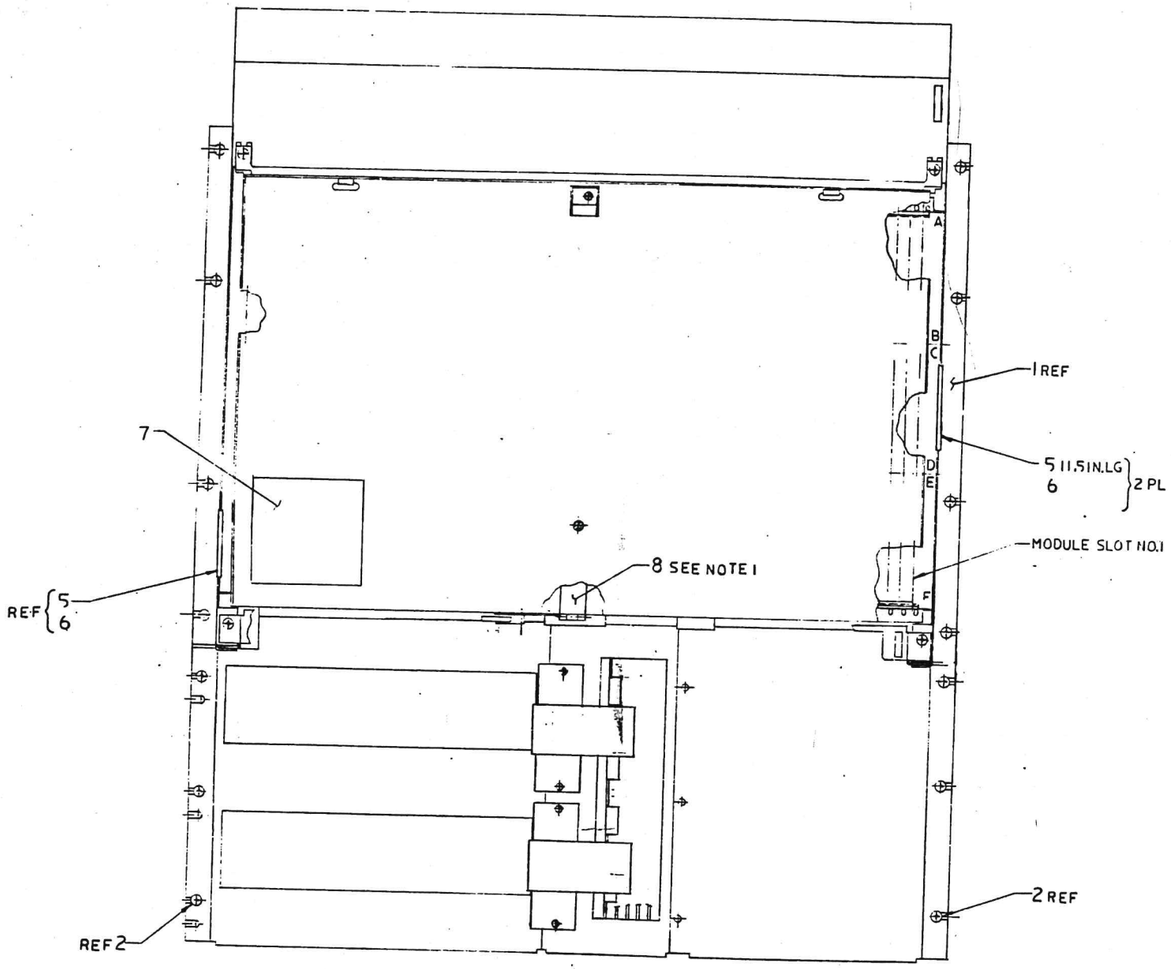

VIEW B-B SH1

REVISION HISTORY	
ECO NUMBER	REV.

SIZE	CODE	DOCUMENT NUMBER	REV
E	AD	7020381-20	A

TITLE LOGIC ASSY RH20 / DTE20

AUTOMATED BY PRTLST.5R(52)

PARTS LIST

LINE	ITEM	TOP DOCUMENT	PART NUMBER	MIN REV	DESCRIPTION	QTY PER VARIATION 00 A1
1	1	E-AD-7012278-0-0	7012278-00		RH20/DTE20 LOGIC ASSY	1
2	2		9009700-00	A	SCREW,SEMS TRUSS PHIL 10-	14
3	3	D-IA-7426455-0-0	7426455-01	A	CHANNEL,CARD CAGE SPACER RIGHT	1
4	4	D-IA-7426454-0-0	7426454-01	A	CHANNEL,CARD CAGE SPACER LEFT	1
5	5		9007035-00	B	GROMMET,CATERPILLAR POLYAMIDE	A/R
6	6		9007594-00	A	ADHESIVE,NEOPRENE	A/R
7	7		7412561-00		DECAL MG10	1
8	8		7426469-01	A	SUPPORT C/C WELDMENT	1

REVISION HISTORY			BASIC PART NO: 7020381
ENG	ECO NUMBER	REV	SECTION A OF A
	INITIAL	A	SECTION.VARIATION INDEX [A]00 [B] [C] [D] [E] [F]

DRN: VICKY GUTBIER	DATE: 13-JUL-83	D I G I T A L
CHK'D: JEFF HUSON	DATE: 13-JUL-83	TITLE PARTS LIST LOGIC ASSY RH20/DTE20
DES.ENG: ROGER SCOTT	DATE: 14-JUL-83	DOCUMENT NUMBER
RESP.ENG.: ROGRE SCOTT	DATE: 14-JUL-83	SIZE K / CODE PL / NUMBER 7020381-0-D8P / REV A
MFG.ENG.: SUE ALMEIDA	DATE: 14-JUL-83	RELEASE DATE:
ASSEMBLY NUMBER: E-AD-7020381-0-0	TOP DOCUMENT NUMBER: K-PL-7020381-0-D8P	FILE NAME: Z7429A.PLS / EDIT #: 5

"THIS DRAWING AND THE SPECIFICATIONS CONTAINED HEREIN ARE CONFIDENTIAL AND PROPRIETARY. THEY ARE THE PROPERTY OF DIGITAL EQUIPMENT CORPORATION AND SHALL NOT BE REPRODUCED OR COPIED OR USED IN WHOLE OR IN PART AS THE BASIS FOR THE MANUFACTURE OR SALE OF ITEMS WITHOUT WRITTEN PERMISSION. THIS IS AN UNPUBLISHED WORK PROTECTED UNDER THE FEDERAL COPYRIGHT LAWS."

MR

1. AFTER WIRE WRAP REMOVE #8-32 x .62 POZI DRIVE SCREW AND ADD ITEM #10 AND REPLACE SCREW WITH ITEM #8 & #25.
2. TRIM ITEM #22 (GROUND PLANE) PER DETAIL 'A'.
3. TRIM ITEM #49 (GROUND PLANE PROTECTION SHT) PER DETAIL 'B'.
4. FOR N.C. WIRE WRAP USE PALLET 9606103-0-0
5. INSTALL ITEM #35 (SHIELD) TO FASTON TABS AS SHOWN IN VIEW D-D TO 16 FASTON TABS ON BOTTOM EDGE OF BOARD ONLY.
6. LOCATE DECALS (ITEM #18) WHERE SHOWN NEARSIDE AND FARSIDE.
7. USE REV 'A' OR HIGHER TOP AND BOTTOM BAR (ITEM #6)
8. ADD STANDOFFS ITEM #51 BEFORE WIRE WRAP AND ADD SCREWS ITEM #52 IN 'B' PLACES BEFORE AWT TEST.
9. AFTER INSTALLING #18 AWG TWP TO PIN, SOLDER THEM IN PLACE (CAREFULLY).

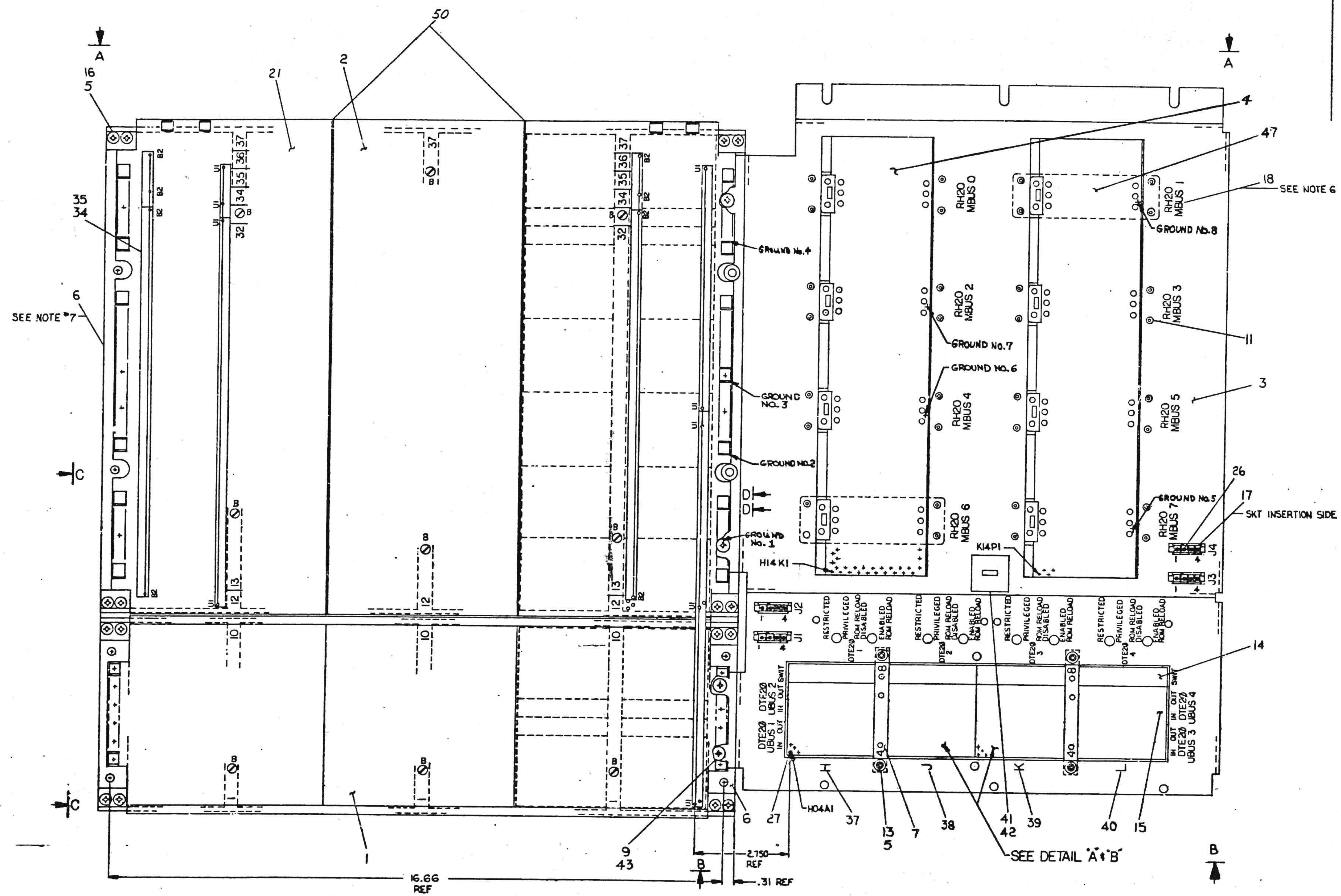

CAUTION:
OFF SHEETS PARTS LIST EXISTS
SEE A-PL-7009429-0-0

REV.	CHANGE NO.		
F	ECO MR003	J. MCILROY	
E	7009429-00004	J. PROVIDENT	
D	KL10-00008	P. WILSON	
C	7009429-00003	J. PROVIDENT	
B	7009429-00002	J. PROVIDENT	
A	7009429-00001	J. PROVIDENT	

FIRST USED ON OPTION/MODEL: KL10

DIMENSIONAL TOLERANCE

THIRD ANGLE PROJECTION

MATERIAL: SEE PARTS LIST

NEXT HIGHER ASSY: E-AD-7010102-0-0

digital

TITLE: WIRED ASSY RH20 - DTE20

E AD 7009429-0-0 REV. F

SCALE 1/1 SHEET 1 OF 2

PROPERTY OF DIGITAL EQUIPMENT CORPORATION. MAR SHALL NOT BE REPRODUCED OR COPIED OR USED IN WHOLE OR IN PART NO. NE BASIS FOR THE MANUFACTURE OR SALE OF ITEMS WITHOUT WRITTEN PERMISSION.
COPYRIGHT © 1974 DIGITAL EQUIPMENT CORPORATION

DO NOT SCALE DRAWING

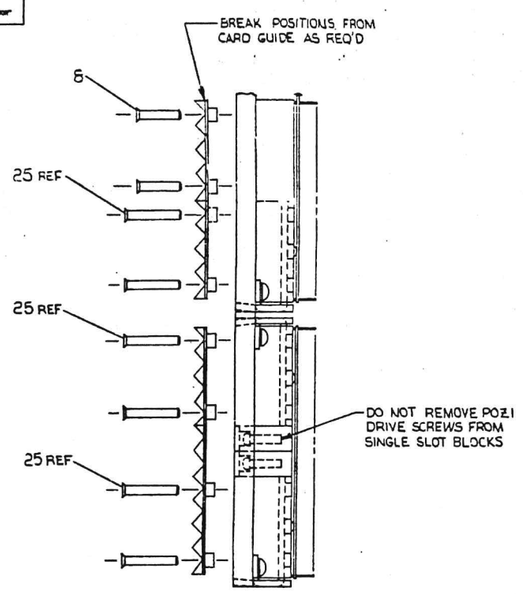

VIEW C-C
SCALE : 1/1
(CENTER ROW ONLY)

WIRE TABLE

ITEM NO	DESCRIPTION AWG	COLOR	FROM CONN	FROM WITH	TO CONN	TO WITH	REMARKS
33	18 TWP	RED	J1-1	ITEM #26	2E01L1	ITEM #25	+5V
		BLK	J1-2		2E01N2		GND
32		WHT	J1-3		2H03N1		SIGNAL
		BLK	J1-4		2H03N2		GND
33		RED	J2-1		2A06L1		+5V
		BLK	J2-2		2A06N2		GND
32		WHT	J2-3		2J08J2		SIGNAL
		BLK	J2-4		2J08H1		GND
33		RED	J3-1		2C06L1		+5V
		BLK	J3-2		2C06N2		GND
32		WHT	J3-3		2K08N1		SIGNAL
		BLK	J3-4		2K08N2		GND
33		RED	J4-1		2E06L1		+5V
		BLK	J4-2		2E06N2		GND
32	18 TWP	WHT	J4-3		2L08J2		SIGNAL
		BLK	J4-4	ITEM #26	2L08H1	ITEM #25	GND
45	18	BLK	GND-1	SOLDER	GND-5	ITEM #46	GND
45	18	BLK	GND-2	SOLDER	GND-6	ITEM #44	GND
45	18	BLK	GND-3	SOLDER	GND-7	ITEM #46	GND
45	18	BLK	GND-4	SOLDER	GND-8	ITEM #46	GND

GROUND PIN CHART

PIN #	PIN #	PIN #	PIN #	PIN #
H04A2	H05A2	H06A2	H07A2	H08A2
H04B2	H05B2	H06B2	H07B2	H08B1
H04C2	H05C2	H06C2	H07C2	H08B2
H04N1	H05N1	H06N1	H07N1	H08C2
H04P1	H05P1	H06P1	H07P1	H08H1
H04R1	H05R1	H06R1	H07R1	H08N2
H0451	H0551	H0651	H0751	H08T1
H04T1	H05T1	H06T1	H07T1	H08T2
H04V2	H05V2	H06V2	H07V2	H09U1
J04A2	J05A2	J06A2	J07A2	J09V1
J04B2	J05B2	J06B2	J07B2	J08A1
J04C2	J05C2	J06C2	J07C2	J09A2
J04D1	J05D1	J06D1	J07D1	J08B1
J04E1	J05E1	J06E1	J07E1	J09B2
J04T1	J05T1	J06T1	J07T1	J08C1
J04V2	J05V2	J06V2	J07V2	J08C2
K04A2	K05A2	K06A2	K07A2	J08H1
K04B2	K05B2	K06B2	K07B2	J08N1
K04C2	K05C2	K06C2	K07C2	J08N2
K04N1	K05N1	K06N1	K07N1	J03T1
K04P1	K05P1	K06P1	K07P1	K08A2
K04R1	K05R1	K06R1	K07R1	K03B1
K0451	K0551	K0651	K0751	K03B2
K04T1	K05T1	K06T1	K07T1	K08C2
K04V2	K05V2	K06V2	K07V2	K08H1
L04A2	L05A2	L06A2	L07A2	K08N2
L04B2	L05B2	L06B2	L07B2	K08T1
L04C2	L05C2	L06C2	L07C2	K08T2
L04D1	L05D1	L06D1	L07D1	K08U1
L04E1	L05E1	L06E1	L07E1	K03V1
L04T1	L05T1	L06T1	L07T1	L08A1
L04V2	L05V2	L06V2	L07V2	L08A2
				L08B1
				L08B2
				L08C1
				L08C2
				L08H1
				L03N1
				L08N2
				L08T1

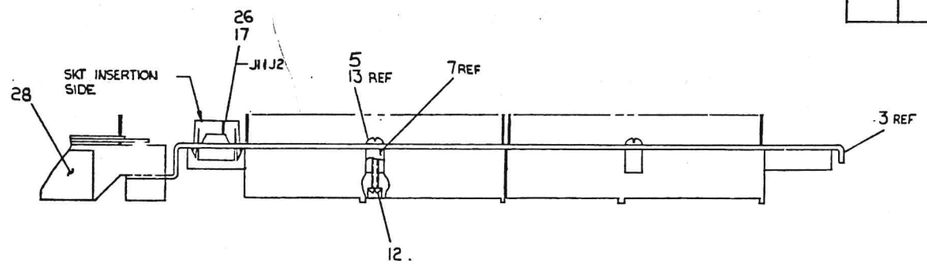

VIEW B-B
SCALE : 1/1

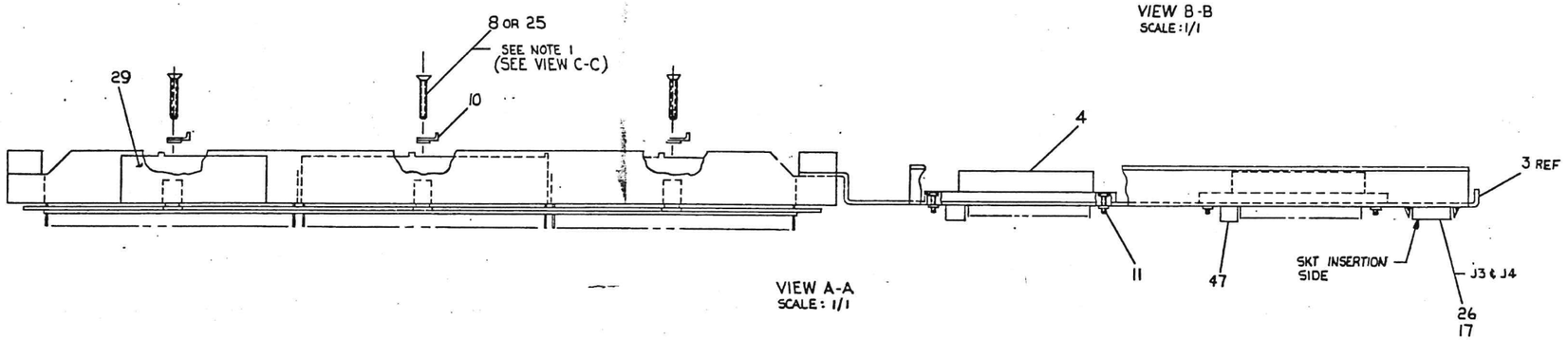

VIEW A-A
SCALE : 1/1

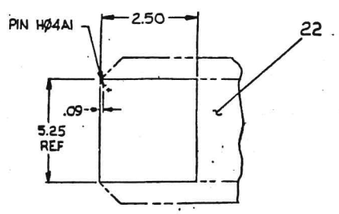

DETAIL "A"
SCALE : NONE
SEE NOTE 2

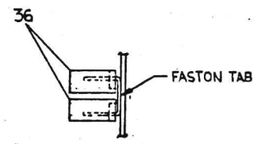

VIEW D-D
SCALE : 2/1
TYP 16 PLACES
SEE NOTE 5

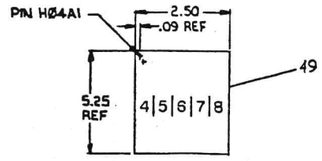

DETAIL "B"
SCALE : NONE
SEE NOTE 3

REVISIONS		
CHK	CHANGE NO.	REV.

TITLE	SIZE	CODE	NUMBER	REV.
WIRED ASSY RH20-DT520	E	AD	7009429-0-C	F

7009429-0-01 F

DIGITAL EQUIPMENT CORPORATION
MAYNARD, MASSACHUSETTS

PARTS LIST

MADE BY V. SOUZA DATE 2/28/75 | CHECKED DATE 3-24-75 | SECTION
ENG Louis J. Carpenito DATE 3-24-75 | PROD J Cuthbert DATE 3-24-75 | ISSUED SECT.

ITEM NO.	DWG NO./PART NO.	DESCRIPTION	QUANTITY/VARIATION
23	9107302-10	TUBING THIN WALL	AR
24	9009139	TERMINAL	16
25	9009665-2	SCR PHL #5 FLAT HD #8-32 X 1.03	32
26	1209379-02	PIN TERMINAL CONTACT	16
27	9008499	SOLDER PREFORMS	172
28	A-DC-7411881-01	DECAL LOGIC ASSY REVISION	1
29	9009255	LABEL ADHESIVE BACK	1
30	9107720-09	WIRE INS TWP #30 AWG (BLK/WHT)	AR
31	9105740-44	WIRE INS SOLID #30 AWG (YEL)	AR
32	9107430-09	WIRE #18 AWG STRD TWP (BLK/WHT)	AR
33	9107430-02	WIRE #18 AWG STRD TWP (RED/BLK)	AR
34	C-MD-7408967-3-0	STRIP INSULATOR	6
35	9008428	BUS STRIP	AR
36	9009754	SHIELD WIRE	20
37	B-DC-5308753-13-0	DECAL 21 POINT LTR (H)	1
38	B-DC-5308753-15-0	DECAL 21 POINT LTR (J)	1
39	B-DC-5308753-17-0	DECAL 21 POINT LTR (K)	1
40	B-DC-5308753-19-0	DECAL 21 POINT LTR (L)	1
41	9008264	MOUNT, CABLE TIE	1
42	9007880	CABLE TIE	1
43	9006635	WASHER, LOCK INT TOOTH #10	4
44	9107720-69	WIRE, INS TWP #30 AWG (BLU/WHT)	AR

TITLE: WIRED ASSY RH2Ø/DTE2Ø | ASSY NO. E-AD-7009429-0-0 | SHEET 2 OF 3 | SIZE A | CODE PL | NUMBER 7009429-0-0 | REV. F | ECO NO. | DIST.

DEC FORM DEC 16-(325)-1031-N870
DRA 110

MR

DIGITAL EQUIPMENT CORPORATION
MAYNARD, MASSACHUSETTS

PARTS LIST

MADE BY V. SOUZA DATE 2-28-75 | CHECKED DATE 3-24-75 | SECTION
ENG Louis J. Carpenito DATE 3/31/75 | PROD J Cuthbert DATE 3-31-75 | ISSUED SECT.

ITEM NO.	DWG NO./PART NO.	DESCRIPTION	QUANTITY/VARIATION
45	9107360-00	WIRE 18 AWG STRANDED (BLK)	A/R
46	9007970	TERMINAL QUICK CONNECT	4
47	D-IA-7010211-2-0	CONN ASSY MASSBUS	1
48	D-WT-KLIØ-0-AWT3	RH\DTE ASSY PROCEDURE	REF
49	D-IA-5009936-0-0	GROUND PLANE PROTECTION SHEET	2
50	9009647	TAPE TRANSPARENT .25W	A/R
51	9009120-04	STANDOFF NO.6 X.500 LG. BRASS	9
52	9006024-01	SCR. PHL. PAN HD. 6-32 X 1/2	9
53	A-SP-3700218-00	PACKAGING INSTRUCTIONS	REF

TITLE: WIRED ASSY RH2Ø/DTE2Ø | ASSY NO. E-AD-7009429-0-0 | SHEET 3 OF 3 | SIZE A | CODE PL | NUMBER 7009429-0-0 | REV. F | DIST.

DEC FORM DEC 16-(325)-1031-N870
DRA 110

MR

DIGITAL EQUIPMENT CORPORATION
MAYNARD, MASSACHUSETTS

PARTS LIST

MADE BY V. SOUZA DATE 2/28/75 | CHECKED DATE 3-24-75 | SECTION
ENG Louis J. Carpenito DATE 3-24-75 | PROD J Cuthbert DATE 3-24-75 | ISSUED SECT.

ITEM NO.	DWG NO./PART NO.	DESCRIPTION	QUANTITY/VARIATION
1	E-AD-7010088-2-0	BACKPLANE ASSY DTE2Ø	1
2	E-AD-7009431-0-0	BACKPLANE ASSY RH2Ø	1
3	E-IA-7411997-0-0	CONN PANEL I/O	1
4	D-IA-7010211-1-0	CONN ASSY MASSBUS	1
5	9006634	WASHER LOCK INT TOOTH #8	20
6	D-MD-7411998-0-0	BAR BACKPLANE TOP & BOT	2
7	C-MD-7412121-0-0	BAR CONN PANEL	2
8	9009070-00	SCR PHL FLAT HD #8-32 X .81	24
9	9006071-1	SCR PHL PAN HD #10-32 X .375	4
10	1210698	CARD GUIDE	24
11	9006390-6	SCR SLOTTED FIL HD #4-40 X .38	32
12	9006120-6	SCR FIL HD POZ1 DRIVE #8-32 X .62	6
13	9006039-1	SCR PHL PAN HD #8-32 X .50	4
14	1211425	CONN BLOCK 72 PIN	2
15	1210258	CONN BLOCK 288 PIN (H863)	2
16	9006037-1	SCR PHL PAN HD #8-32 X .38	16
17	1209350-04	CONN SKT HSG 4 PIN	4
18	A-DC-7413453-0-0	DECAL DTE/RH2Ø I/O	2
19	K-WL-KLIØ-Ø-PF	WIRE LIST	REF
20	A-WT-7009429-0	AWT REVISION STATUS SHEET	REF
21	D-IA-5009956	GROUND PLANE PROTECTION SHEET	3
22	D-IA-5009785-03	GROUND PLANE	1

TITLE: WIRED ASSY RH2Ø/DTE2Ø | ASSY NO. E-AD-7009429-0-0 | SHEET 1 OF 3 | SIZE A | CODE PL | NUMBER 7009429-0-0 | REV. F | ECO NO 70002 MR003 | DIST.

DEC FORM DEC 16-(325)-1031-N870
DRA 110

MR

"THIS DRAWING AND SPECIFICATIONS, HEREIN, ARE THE PROPERTY OF DIGITAL EQUIPMENT CORPORATION AND SHALL NOT BE REPRODUCED OR COPIED OR USED IN WHOLE OR IN PART AS THE BASIS FOR THE MANUFACTURE OR SALE OF ITEMS WITHOUT WRITTEN PERMISSION.
COPYRIGHT © 1974, DIGITAL EQUIPMENT CORPORATION"

DO NOT SCALE DRAWING

LEGEND	
NUMBER	VARIATION
7010103-1	1 SWITCH
7010103-2	4 SWITCH

NOTES:
1. CONNECTORS P1 AND P2 TO BE WIRED POINT TO POINT. (P1 TO P2)
2. 7010103-1 USES ONLY 1 SWITCH (S2) AND 7010103-2 USES ALL 4 SWITCHES (S1 TURU S4)
3. TRIM AND PREPARE CABLE PER CABLE PROCESS SHEET A-SP-7606435-00
4. TO INSTALL CABLE USE COVER OF CONN. 1210073 (FROM SW. BOARD ASSY REF).
5. SOLDER JUMPERS ITEM 7 TO TERMINALS AS SHOWN.
6. ITEM 6 IS NOT INSTALLED IN E2 WHEN BUILDING 7010103-1.

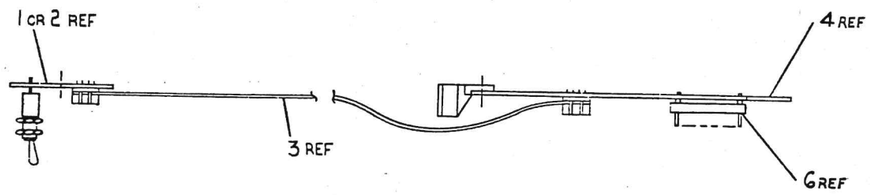

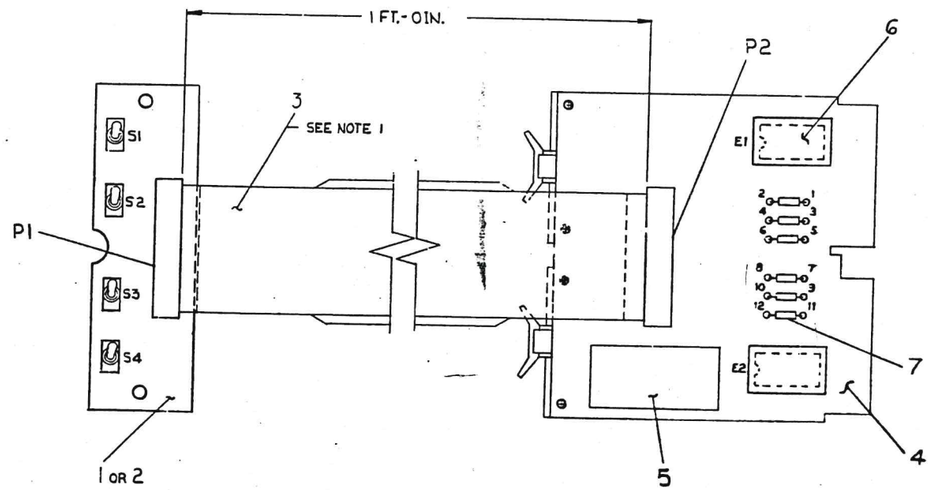

G	G	JUMPER, WHITE INS.	9009185-00	7
2	1	PLUG, PRIORITY	C-IA-5408750-0-0	6
1	1	LABEL, ADHESIVE BACK	9009255	5
1	1	JUMPER, INTERRUPT (DTE20)	D-UA-M8544-0-0	4
A/R	A/R	CABLE, RIBBON, 40 COND.	9107747-01	3
1	–	SWITCH BOARD	D-UA-5411360-0-0	2
–	1	SWITCH BOARD	D-UA-5411360-YA-0	1

7010103-2 7010103-1

QUANITY VARIATION

FIRST USED ON OPTION/MODEL	QTY.	DESCRIPTION	PART NO.	ITEM NO.
KLIØ		PARTS LIST		

DIMENSIONAL TOLERANCE
DIMENSIONS ARE DECIMAL INCHES
UNLESS OTHERWISE SPECIFIED

MILLIMETERS	INCHES	ANGLES
XXX ±0.10	XXX ±.005	±0° 30'
XX ±0.5	XX ±.02	
X ±2	X ±.1	

THIRD ANGLE PROJECTION

REMOVE BURRS AND BREAK SHARP CORNERS SURFACE QUALITY ✓

MATERIAL SEE PARTS LIST

FINISH

		DATE
DRN.		7-2-74
CHK'D		7-29-74
ENG.		12-10-74
PROJ. ENG.		1/1/75
PROG.		1-1-75

NEXT HIGHER ASSY. D-UA-KLIØ-Ø-Ø

SCALE 1/1

SHEET 1 OF 1

digital

TITLE SWITCH ASSY.

SIZE	CODE	NUMBER	REV.
D	AD	7010103-0-0	C

DIST.

REVISIONS			
REV.	CHANGE NO.		
A	7010103-00001	G.Abrahamian 3-Feb-76	
B	7010103-00002	J. PROVIDENT 3 March 76	
C	7010103-00003	J.PROVIDENT 17 March 76	

W. LEHUCKET 9 Jun 76

Last Machine Run 13 Jun 76

SIZE D | FSCM 18324 | NEXT ASSY | USED ON

7010103-0-0 REV C

DAI

"THIS DRAWING AND SPECIFICATIONS, HEREIN, ARE THE PROPERTY OF DIGITAL EQUIPMENT CORPORATION AND SHALL NOT BE REPRODUCED OR COPIED OR USED IN WHOLE OR IN PART AS THE BASIS FOR THE MANUFACTURE OR SALE OF ITEMS WITHOUT WRITTEN PERMISSION. COPYRIGHT © 1974, DIGITAL EQUIPMENT CORPORATION"

NOTES:

1. FOR DRAWING DIRECTORY REFER TO B-DD-5411360-0
2. FOR CIRCUIT SCHEMATIC SEE D-CS-M8564-Ø-INTJ
3. SAVE COVER OF 40 TERM. CONN. (1210073) FOR USE AT NEXT HIGHER ASSY (7010103)

QTY	REF DESIGNATION	DESCRIPTION	PART NO.	ITEM NO
1		ETCH CIRCUIT BOARD	5011359	1
1	J1	CONN, 40 TERMINALS (BODY ONLY)	1210073	2
4	S1, S2, S3, S4	SWITCH, TOGGLE	1209590	3

PARTS LIST

IC TYPE	GND	+ 5V

GND AND 5V ARE USUALLY PIN 7 AND 14 RESPECTIVELY EXCEPTIONS ARE STATED ABOVE

IC PIN LOCATIONS

FIRST USED ON OPTION MODEL: KLIØ

ETCH BOARD REV

REV	CHANGE NO	REVISIONS	DEC NO.	EIA NO.	DEC NO.	EIA NO.
CHK						

SEMICONDUCTOR CONVERSION CHART

DRN. [signature] DATE 12/16/74
CHK'D. [signature] DATE 12-31-74
ENG. [signature] DATE
PROJ. ENG. [signature] DATE
PROD. [signature] DATE 12/2/74

NEXT HIGHER ASSY: B-DD-5411360-0

SCALE

SHEET 1 OF 4

digital EQUIPMENT CORPORATION MAYNARD MASSACHUSETTS

TITLE: MASTER INTERRUPT SWITCH BD

SIZE D | CODE UA | NUMBER 5411360-0-0 | REV.

DIST.

D UA 5411360-0-0

THIS DRAWING AND SPECIFICATIONS, HEREIN, ARE THE PROPERTY OF DIGITAL EQUIPMENT CORPORATION AND SHALL NOT BE REPRODUCED OR COPIED OR USED IN WHOLE OR IN PART AS THE BASIS FOR THE MANUFACTURE OR SALE OF ITEMS WITHOUT WRITTEN PERMISSION.
COPYRIGHT ©1976 DIGITAL EQUIPMENT CORPORATION

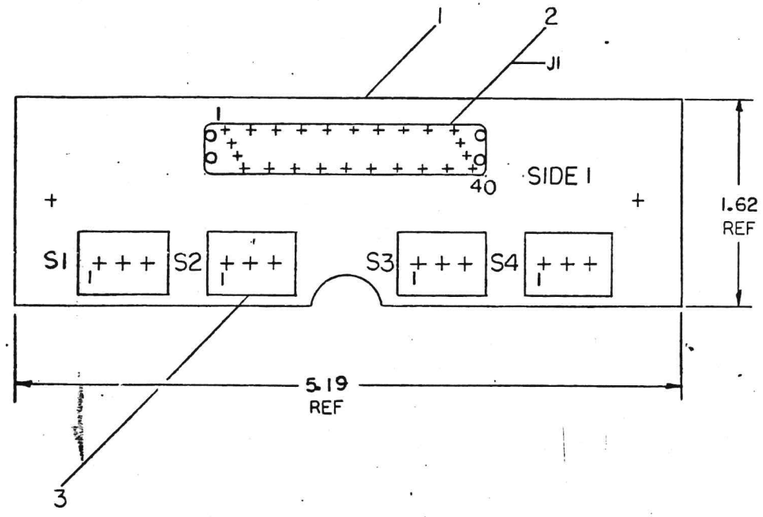

(SIDE 1)

REVISIONS		
CHK	CHANGE NO	REV

TITLE	SIZE	CODE	NUMBER	REV.
MASTER INTERRUPT SWITCH BD	D	UA	5411360 - 0 - 0	
SCALE	SHEET 2 OF 4	DIST		

DUA 5411360-0-0

THIS DRAWING AND SPECIFICATIONS, HEREIN, ARE THE PROPERTY OF DIGITAL EQUIPMENT CORPORATION AND SHALL NOT BE REPRODUCED OR COPIED OR USED IN WHOLE OR IN PART AS THE BASIS FOR THE MANUFACTURE OR SALE OF ITEMS WITHOUT WRITTEN PERMISSION.
COPYRIGHT © 1974, DIGITAL EQUIPMENT CORPORATION

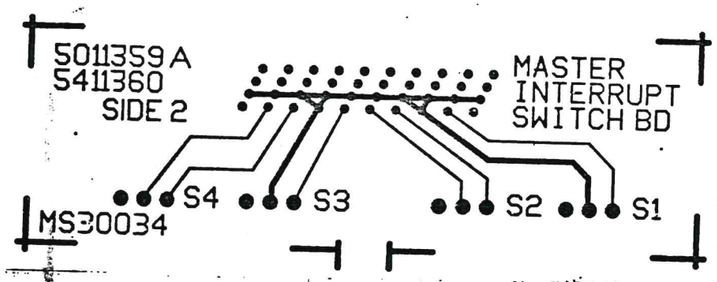

(SIDE 2)

REVISIONS		
CHK	CHANGE NO	REV

TITLE	SIZE	CODE	NUMBER	REV.
MASTER INTERRUPT SWITCH BD	D	UA	5411360-0-0	
SCALE	SHEET 3 OF 4	DIST		

D UA 5411360-0-0

D UA 5411360-0-0

"THIS DRAWING AND SPECIFICATIONS, HEREIN, ARE THE PROPERTY OF DIGITAL EQUIPMENT CORPORATION AND SHALL NOT BE REPRODUCED OR COPIED OR USED IN WHOLE OR IN PART AS THE BASIS FOR THE MANUFACTURE OR SALE OF ITEMS WITHOUT WRITTEN PERMISSION
COPYRIGHT © 1974, DIGITAL EQUIPMENT CORPORATION"

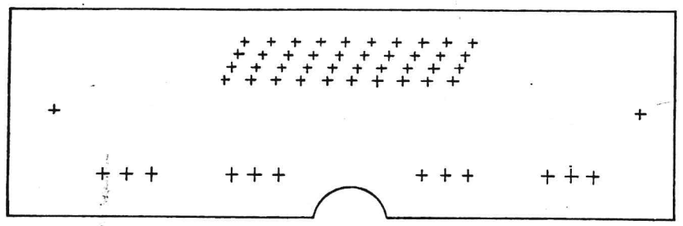

(SIDE 2)

REVISIONS		
CHK	CHANGE NO	REV

TITLE	SIZE	CODE	NUMBER	REV.
MASTER INTERRUPT SWITCH BD	D	UA	5411360-0-0	
SCALE	SHEET 4 OF 4	DIST.		

D UA 5411360-0-0

THIS DRAWING AND SPECIFICATIONS, HEREIN, ARE THE PROPERTY OF DIGITAL EQUIPMENT CORPORATION AND SHALL NOT BE REPRODUCED OR COPIED OR USED IN WHOLE OR IN PART AS THE BASIS FOR THE MANUFACTURE OR SALE OF ITEMS WITHOUT WRITTEN PERMISSION.
COPYRIGHT © 1975, DIGITAL EQUIPMENT CORPORATION

NOTES:
1. SWITCH MOUNTING HARDWARE SUPPLIED WITH VANE SWITCH.

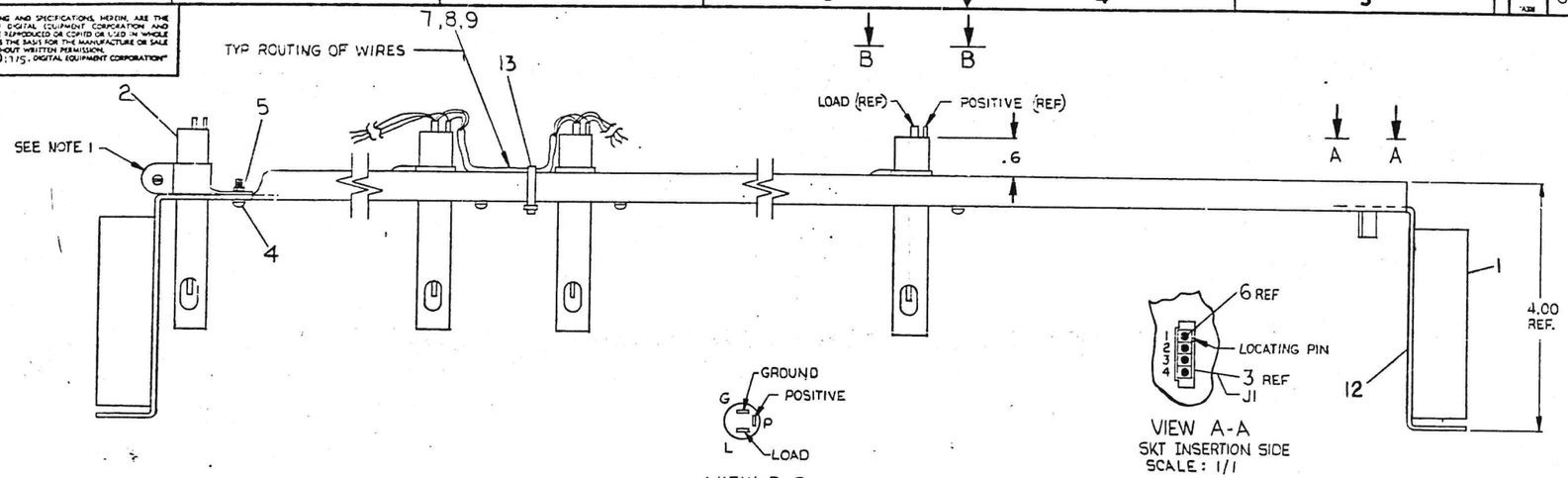

VIEW B-B
TYP S1 THRU S4
SCALE: 1/1

VIEW A-A
SKT INSERTION SIDE
SCALE: 1/1

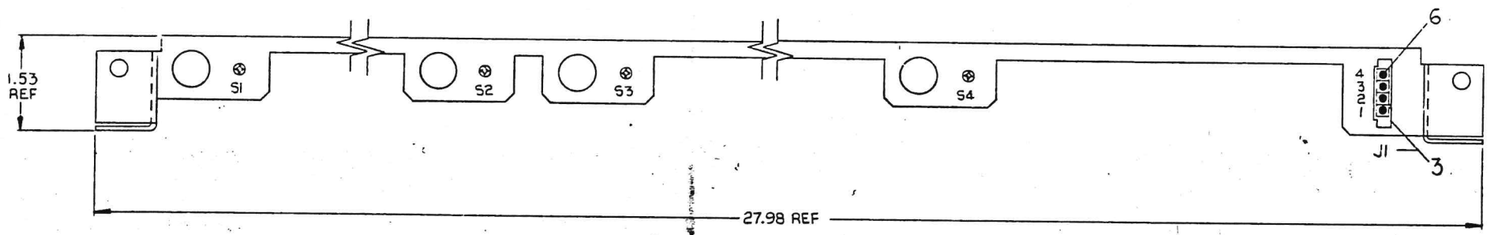

WIRE TABLE

ITEM NO	DESCRIPTION AWG	COLOR	FROM CONN	FROM TERM	TO CONN	TO TERM
9	22	BLK	S1-G	10 & 11	S2-G	10 & 11
			S3-G	10 & 11	S4-G	10 & 11
9		BLK	J1-2	6	J1-1	6
8		CRN	S1-P	10 & 11	S2-P	10 & 11
			S3-P	10 & 11	S4-P	
8		CRN	J1-3	6		
7		YEL	S1-L	10 & 11	S2-L	
			S3-L	10 & 11	S4-L	10 & 11
7	22	YEL	J1-4	6		

ITEM NO	DESCRIPTION	DWG. PART NO.	QTY
8	CABLE TIES	9007032	13
1	LABEL ADHESIVE BACK	9009255	12
12	SHRINKABLE TUBING	3103305-02	11
12	TERMINAL QUICK CONNECT	9003137-01	10
A/R	WIRE, 22 AWG STRD (BLK)	9107350-00	9
A/R	WIRE, 22 AWG STRD (ORN)	9107350-33	8
A/R	WIRE, 22 AWG STRD (YEL)	9107350-44	7
4	TERMINAL SKT CONTACT	12C9379-06	6
4	NUT, KEPS 6-32	9006560	5
4	SCR, PH HD PAN 6-32 x .38	9005022-1	4
1	CONN SKT HSG 4 PIN	12C9350-04	3
4	VANE SWITCH SPST N.O.	12IC736	2
1	BRACKET, SWITCH	D-NC-7414328-0-0	1

UNLESS OTHERWISE SPECIFIED DIMENSIONS ARE IN INCHES

ANGLES ±0° 30'	CLASS OF ACCURACY (CHECK ONE)	NOMINAL DIMENSION RANGE INCHES: OVER 0 TO .03	OVER .03 TO 1.2	OVER 1.2 TO 4.3	OVER 4.3 TO 12.0	OVER 12.0 TO 40.0	OVER 40.0 TO 160.0
SURFACE QUALITY IN MICROINCHES	MEDIUM ☐	±.004	±.008	±.012	±.016	±.024	±.04
	PREFERRED ☐	±.012	±.016	±.025	±.04	±.063	±0.1

QUANTITY & VARIATION

THIRD ANGLE PROJECTION

REMOVE BURRS AND BREAK SHARP CORNERS

DO NOT SCALE DWG

MATERIAL SEE PARTS LIST

FINISH

DRN. M Gerber 6-10-75
CHK'D B Hardy 6-10-75
ENG. A Ellis 6-10-75
PROJ. ENG. [illegible] 6-10-75
PROD. [illegible] 6-22-75
NEXT HIGHER ASSY.
E-AD-7010101-0-0
SCALE 1/1
SHEET 1 OF 1

FIRST USED ON KL10 digital

TITLE
VANE SWITCH ASSY.

SIZE D | CODE 1A | NUMBER 7011520-0-0 | REV.
DIST.

REVISIONS	CHANGE NO.	CHK
REV.	M Gerber 6-17-75	PCV

DEC FORM NO. DRD 100-C

This drawing and specifications, herein, are the property of Digital Equipment Corporation and shall not be reproduced or copied or used in whole or in part as the basis for the manufacture or sale of items without written permission.

WIRE TABLE

ITEM NO	DESCRIPTION AWG	COLOR	FROM CONNECTION	WITH	TO CONNECTION	WITH
3	22	RED	P1-1	2	P2-1	2
3	22	BLK.	P1-2	2	P2-2	2
3	22	GRN	P1-3	2	P2-3	2

LEGEND

NUMBER	DIM "X" VARIATION	DIM "Y" (PRECUT) REF
7008288-3F	3FT. 6IN ± 1 IN.	3FT. 6.8 IN ± 1 IN.
7008288-8F	8FT. 6IN ± 2IN.	8FT. 6.8IN ± 2IN.
7008288-06	6FT. ± 2IN.	6FT. 0.8IN ± 2IN.
7008288-12	12FT. ± 3IN.	12FT. 0.8IN ± 3IN.
7008288-05	5FT. ± 1IN.	5FT. 0.8IN ± 2IN.
7008288-10	10FT. ± 2IN.	10FT. 0.8IN ± 3IN.
7008288-15	15FT. ± 3IN.	15FT. 0.8IN ± 3IN.
7008288-08	8FT. ± 2IN.	8FT. 0.8IN ± 2IN.
7008288-30	30FT. ± 7IN.	30FT. 0.8IN ± 7IN.
7008288-40	40FT. ± 10IN.	40FT. 0.8IN ± 10IN
7008288-25	25FT. ± 10IN	25FT. 0.8IN ± 10IN

NOTES:

~~1. THE REMAINING BLK WIRE IS TO BE CUT BACK AT JACKET (BOTH ENDS.)~~

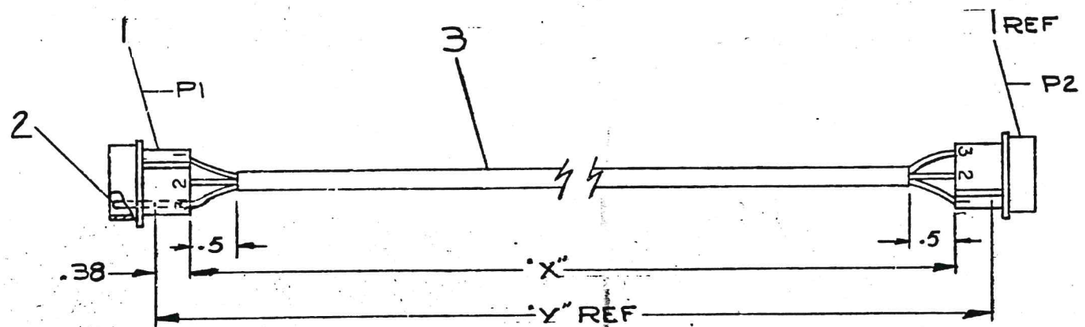

QTY.	DESCRIPTION	PART NO.	ITEM NO.
A/R	WIRE, 3 COND #22 AWG	9107756	3
6	PIN MALE #60620-1	1209378-03	2
2	PIN HOUSING #1-480305-0	1209351-03	1

PARTS LIST

FIRST USED ON OPTION/MODEL: PDP/11

UNLESS OTHERWISE SPECIFIED

UNLESS OTHERWISE SPECIFIED
DIMENSION IN INCHES
TOLERANCES
~~DECIMALS FRACTIONS~~ ANGLES ± 0°30'
FINAL SURFACE QUALITY ✓
REMOVE BURRS AND BREAK SHARP CORNERS

MATERIAL: SEE PARTS LIST

FINISH: —"—

		DATE
DRN.	[signature]	3/22/71
CHK'D	[signature]	3-31-71
ENG.	[signature]	4-9-71
PROJ. ENG.	[signature]	4-9-71
PROD.	[signature]	4/12/71

NEXT HIGHER ASS'Y: D-UA-RKØ2-0-Ø

SCALE: —"—

SHEET 1 OF 1

digital EQUIPMENT CORPORATION
MAYNARD, MASSACHUSETTS

TITLE: CABLE ASSY

SIZE	CODE	NUMBER	REV.
C	IA	7008288-0-0	J

DIST. G

REVISIONS

CHK	CHANGE NO.	REV.
[illegible]	7008288-00001	A
	R. Towne 10-16-72	
	R. BURTON	
	[illegible] 10-25-72	
[illegible]	7008288-00002	B
	[illegible] 8-5-74	
	D. LEWIS	
	[illegible] 7-13-74	
[illegible]	7008288-00003	C
	[illegible] 3-27-75	
	B. MINOR	
	[illegible] 3-28-75	
[illegible]	7008288-00004	D
	[illegible] 6-10-75	
	J. PROVIDENT	
	[illegible]	
[illegible]	7008288-00005	E
	[illegible] 3-MAR-76	
	F. DOLL	
	[illegible] 5-MAR-76	
[illegible]	7008288-00006	F
	[illegible] 22-MAR-76	
	J. MCINTYRE	
	[illegible] 23-APR-76	
[illegible]	7012401-00003	H
	[illegible] 23 May 77	
	I. MORRIS	
	[illegible] 24 MAY 77	
[illegible]	7008288-ML007	J
	[illegible] 5/2/80	
	CASTELLANOS	
	[illegible]	

DEC FORM NO. DRC 100

SIZE C CODE IA NUMBER 7008288-0-0 REV. J

This drawing and specifications, herein, are the property of Digital Equipment Corporation and shall not be reproduced or copied or used in whole or in part as the basis for the manufacture or sale of items without written permission.

COPYRIGHT © 1973
DIGITAL EQUIP CORP.

WIRE TABLE

FROM	TO	FROM	TO
P1-1	P2-1	P1-21	P2-21
P1-2	P2-2	P1-22	P2-22
P1-3	P2-3	P1-23	P2-23
P1-4	P2-4	P1-24	P2-24
P1-5	P2-5	P1-25	P2-25
P1-6	P2-6	P1-26	P2-26
P1-7	P2-7	P1-27	P2-27
P1-8	P2-8	P1-28	P2-28
P1-9	P2-9	P1-29	P2-29
P1-10	P2-10	P1-30	P2-30
P1-11	P2-11	P1-31	P2-31
P1-12	P2-12	P1-32	P2-32
P1-13	P2-13	P1-33	P2-33
P1-14	P2-14	P1-34	P2-34
P1-15	P2-15	P1-35	P2-35
P1-16	P2-16	P1-36	P2-36
P1-17	P2-17	P1-37	P2-37
P1-18	P2-18	P1-38	P2-38
P1-19	P2-19	P1-39	P2-39
P1-20	P2-20	P1-40	P2-40

LEGEND

NUMBER	DIM "X"	PRECUT LENGTH	REMARKS
BCØ6R-01	1FT	1FT 1.5IN ± 1IN	SEE PRE-CUT VIEW C-C
BCØ6R-02	2FT	2FT 1.5IN ± 1 IN	
BCØ6R-03	3FT	3FT 1.5IN ± 1 IN	
BCØ6R-04	4FT	4FT 1.5IN ± 1 IN	
* BCØ6R-05	4FT 6IN	4FT 7.5IN ± 1.5IN	SEE NOTE 7 *
BCØ6R-06	6FT	6FT 1.5IN ± 2IN	
BCØ6R-08	8 FT	8 FT 1.5IN ± 2IN	
BCØ6R-10	10FT	10FT 1.5IN ± 2IN	
BCØ6R-12	12FT	12FT 1.5IN ± 3IN	
BCØ6R-20	20FT	20FT 1.5IN ± 3IN	
BCØ6R-25	25FT	25FT 1.5IN ± 3IN	
BCØ6R-30	30FT	30FT 1.5IN ± 6IN	
BCØ6R-50	50FT	50FT 1.5IN ± 1.0 FT	
BCØ6R-60	60FT	60FT 1.5IN ± 1.2FT	
BCØ6R-75	75 FT	75 FT 1.5IN ± 1.5 FT	
BCØ6R-A0	100FT	100FT 1.5IN ± 2 FT	
BCØ6R-07	7 FT	7FT 1.5IN ± 2IN	
BCØ6R-8F	8FT 6IN	8FT 7.5IN ± 1 IN	SEE PRE-CUT VIEW C-C
BCØ6R-15	15FT	15FT 1.5 IN ± 3 IN	
BCØ6R-1C	15 IN	16.5 IN ± 1 IN	SEE PRE-CUT VIEW C-C
BCØ6R-1K	1FT 9IN	1FT 10.5IN ± 1IN	SEE PRE-CUT VIEW C-C

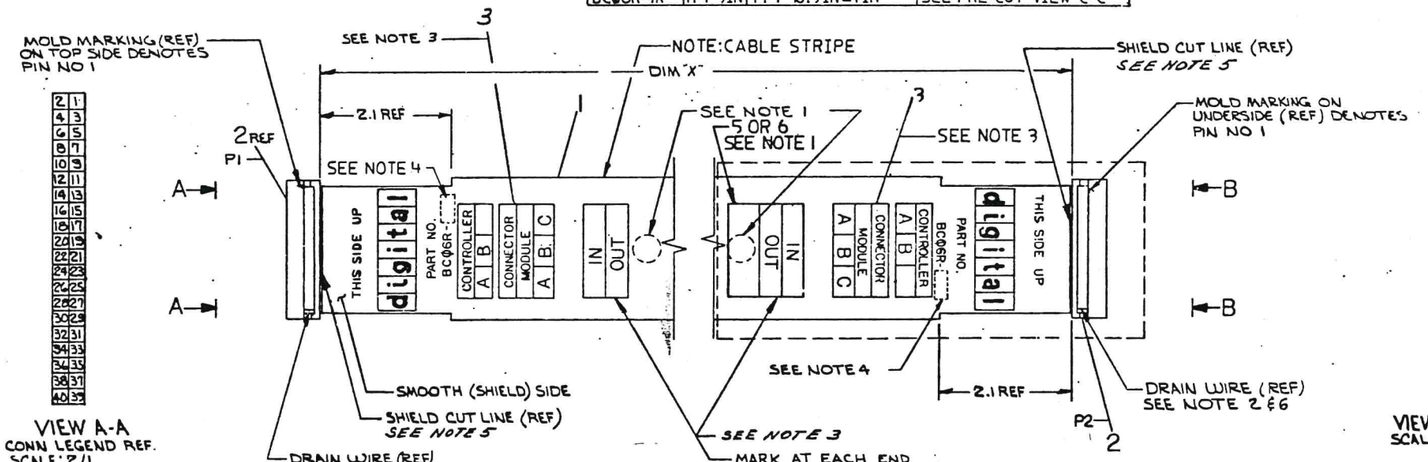

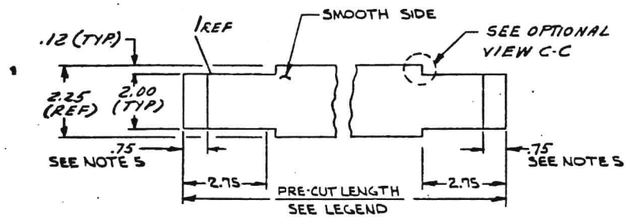

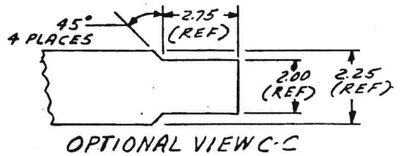

NOTES:

1. LABEL (ITEMS 5 OR 6 CAN BE USED) TO CONTAIN:
   PART NO.
   REV.
   DATE (OF BUILD)
   MFG (STAMP) TEST (STAMP)
   INSP (STAMP)
   AFFIX LABEL AROUND CABLE IN APPROX CENTER.
2. DRAIN WIRE CONNECTS TO PIN NO 40.
3. RUBBER STAMP INFORMATION SHOWN USING INK (ITEM 3) & ARTWORK DEC NO A-DC-7411699-0-0.
4. STAMP APPLICABLE OPTION DASH NO. ACCORDING TO LENGTH.
5. REMOVE SHIELD .75 FROM END OF PRECUT CABLE (SEE VIEW C-C).
6. COVER EXPOSED DRAIN WIRE WITH ITEM 4 PRIOR TO ASSY (BOTH ENDS).
7. * FOR RPØ4, RPØ5, RPØ6 USE WRAP AROUND VINYL LABEL. SEE VARIATIONS ON DRAWING NUMBER A-PS-3615389-0-0. ALSO SEE NEXT HIGHER ASSEMBLY E-IA-7009807-0-0 AND E-IA-7009808-0-0.

CAUTION: OFF SHEET PARTS LIST EXISTS. SEE: K-PL-BCØ6R-Ø-DBP (Z6996)

REVISIONS				
REV.	CHANGE NO	CHK		
A	BCØ6R-00001	LH	W. DUNJAM	4-7-75
B	BCØ6R-00002	LB	L. CONDON	4-7-75
C	BCØ6R-00003	LH	D. LIGNOS	6-7-75
D	BCØ6R-00004	BC	R. BOUTEAU	11-5-77
E	BCØ6R-MLVØ5	CK	L. FAPHANIELA	10-17-78
F	BCØ6R-CXØØ6		C. DUNIGAN	
H	BCØ6R-CXØØ7		W. HARDER	2 SEP 83
J	BCØ6R-CXØØ8		R. HOLLADAY	

DEC FORM NO DRD 100-A

FIRST USED ON OPTION/MODEL	QTY.	DESCRIPTION	PART NO.	ITEM NO.
FPØ4		PARTS LIST		

UNLESS OTHERWISE SPECIFIED DIMENSION IN INCHES. TOLERANCES
DECIMALS: .XXX ± .005, .XX ± .02, .X ± .1; ANGLES: ± 0° 30'
REMOVE BURRS AND BREAK SHARP CORNERS SURFACE QUALITY √

DRN. E. M. Cruz DATE 12-22-77
CHK'D [illegible] DATE 1-5-78
ENG'R W. Bader DATE 1-5-78
PROJ'G'R [illegible] DATE 1/11/78
MGR. [illegible] DATE 1/11/78

EQUIPMENT CORPORATION — MAYNARD, MASSACHUSETTS

MATERIAL: SEE PARTS LIST
FINISH: —
NEXT HIGHER ASSY.: E-IA-7009807-0-0, E-IA-7009808-0-0
SCALE: NONE
SHEET 1 OF 1

TITLE: BCØ6R I/O CABLE

SIZE CODE: D UA | NUMBER: BCØ6R-Ø-Ø | REV: J
LIST:

DRAWING NUMBER: D-UA-BCØ6R-Ø-Ø
1 of 1

"THIS DRAWING AND SPECIFICATIONS, HEREIN, ARE THE PROPERTY OF DIGITAL EQUIPMENT CORPORATION AND SHALL NOT BE REPRODUCED OR COPIED OR USED IN WHOLE OR IN PART AS THE BASIS FOR THE MANUFACTURE OR SALE OF ITEMS WITHOUT WRITTEN PERMISSION.
COPYRIGHT © 1983 DIGITAL EQUIPMENT CORPORATION"

SIZE D | CODE IA | NUMBER 7020715-0-0 | REV A

WIRE TABLE

ITEM NO.	DESCRIPTION AWG	COLOR	FROM POINT	FROM CONNECTION	FROM WITH	TO POINT	TO CONNECTION	TO WITH
1	4	BRN		P1-1		1	———	5
↑	↑	BLK		-2		2	———	5
		BLK/WHT		-3		3	———	5
↓	↓	BLU		-5		4	———	5
1	4	GRN/YEL		P1-G4		5	———	5

LEGEND

PART. NO.	DIM "X" VAR	DIM "Y" (PRECUT) REF	REV
7020715-01	13FT, 0IN±3.0IN	16FT, 1IN	A1

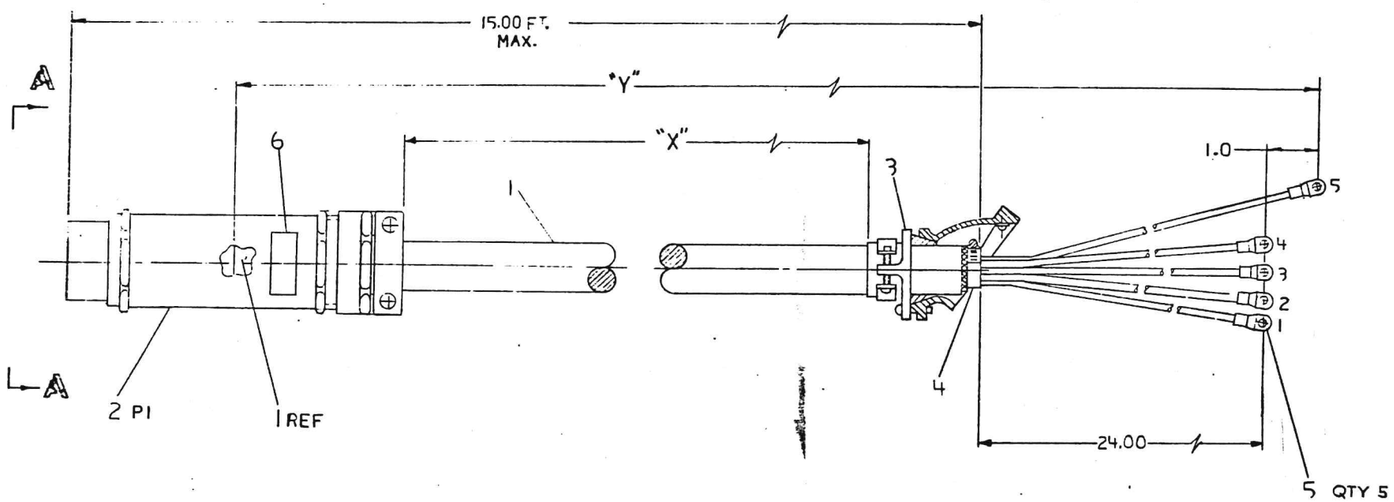

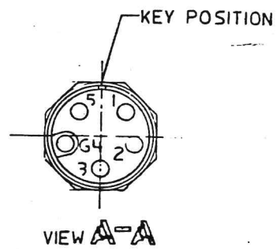

VIEW A-A

CAUTION: OFF SHEET PARTS LISTS EXISTS
SEE K-PL-7020715-0-DBP

DESCRIPTION	DRAWING NO.	PART NO.	ITEM NO.

UNLESS OTHERWISE SPECIFIED DIMENSIONS ARE IN INCHES AND THE FOLLOWING TOLERANCES APPLY (PER DEC STD 114)

INCHES TOLERANCES: .X = ± .1, .XX = ± .02, .XXX = ± .005
ANGLES ±0°30'
SURFACE QUALITY: MICROINCHES
APPLICABLE DIMENSION RANGE (CHECK ONE)

DIMENSION RANGE IN INCHES	OVER 0 TO 0.2	OVER 0.2 TO 1.2	OVER 1.2 TO 4.0	OVER 4.0 TO 12.0	OVER 12.0 TO 40.0	OVER 40.0 TO 50.0
	± .02		± .03	± .05	± .10	
	± .004	± .008	± .012	± .016	± .024	± .04

QUANTITY & VARIATION

THIRD ANGLE PROJECTION

DO NOT SCALE DRAWING

REMOVE BURRS AND BREAK SHARP CORNERS

MATERIAL: SEE PARTS LIST

FINISH: —

		DATE
DRN	D. Z. Olson	25 FEB 83
CHK'D	U. Faulstich	5-29-83
DES. ENG.	[signature]	5-29-83
RESP. ENG.	[signature]	5-29-83
MFG. ENG.	[signature]	7-5-83

NEXT HIGHER DOC: D-AD-7020715-0-0

TITLE: digital
CABLE PRIMARY PWR (60HZ KL10R)

DOCUMENT NUMBER: SIZE D | CODE IA | NUMBER 7020715-0-0 | REV. A

SCALE NONE | SHEET 1 OF 1

REVISION HISTORY | ECO NUMBER | REV.

DIGITAL EQUIPMENT CORPORATION
PARTS LIST

MADE BY J. HUSON DATE 26 OCT 83	CHECKED J. HUSON DATE 26 OCT 83	SECTION A
ENG R. SCOTT DATE 26 OCT 83	PROD DATE	ISSUED SECTION A

NOTES:

ITEM NO.	DRAWING NO.	PART NO.	DESCRIPTION	QUANTITY / VARIATION KL1Ø-RA	KL1Ø-RC	KL1Ø-RE	REF DESIGNATION
1		MPØ17Ø8	KL1ØR PRINT SET	1	1	1	
2		MPØØ3Ø1	KL1Ø-PV PRINT SET	1	1	1	
3		MP-N114Ø-ØØ	11/40 PRINT SET	1	1	1	
4		MP-ØRH11-ØØ	RH11 PRINT SET	1	1	1	
5		MP-ØDD11-BØ	DD11-B PRINT SET	1	1	1	
6		MPØ171Ø	DC2ØF PRINT SET	1	1	0	
7		MPØØ622	MF2Ø PRINT SET	1	1	0	
8		MPØØ629	RXØ2 PRINT SET	1	1	1	
9		MPØRX11	RX11 PRINT SET	1	1	1	
10		MPØØØ56	RH2Ø PRINT SET	1	1	1	
11		MP-BM873-ØØ	BM873-YJ PRINT SET	1	1	1	
12		3012558-1	MICROFICHE READER	1	1	1	
13		3612408-00	FLOPPY DISK	2	2	2	
14	MD-1Ø-DJYAA-*-YB		2040 FRONT END CPU CUSP #1	1	1	1	
15	MD-1Ø-DJYAB-*-YB		2020 FRONT END CPU CUSP #2	1	1	1	
16	MD-1Ø-DJYAC-*-YB		2040 FRONT END DISK CON.CUSP #1	1	1	1	
17	MD-1Ø-DJYAD-*-YB		2040 FRONT END DISK CON.CUSP #2	1	1	1	
18	MD-1Ø-DJYBA-*-YB		2040 FRONT END DEC X/11 EXERC.CUSP	1	1	1	
19	MD-1Ø-DGYAA-*-YB		2040 CONSOLE MONITOR CUSP	1	1	1	
20	MD-1Ø-DGYBA-*-YB		KL1Ø SYSTEM CUSP DISKETTE #1	1	1	1	

E.C.O. NO.

"THIS DRAWING AND SPECIFICATIONS, HEREIN, ARE THE PROPERTY OF DIGITAL EQUIPMENT CORPORATION AND SHALL NOT BE REPRODUCED OR COPIED OR USED IN WHOLE OR IN PART AS THE BASIS FOR THE MANUFACTURE OR SALE OF ITEMS WITHOUT WRITTEN PERMISSION.
COPYRIGHT © DIGITAL EQUIPMENT CORPORATION"

DRB 125

TITLE	ASSY NO.	SIZE	CODE	NUMBER	REV.
SHIP LIST KL1Ø-R		B	PL	KL1Ø-R-SH	A
	SHEET 1 OF 2			INSERTION PARTS LIST DATA BASE REV	

MRO

DIGITAL EQUIPMENT CORPORATION
PARTS LIST

MADE BY J. HUSON DATE 26 OCT 83	CHECKED J. HUSON DATE 26 OCT 83	SECTION A
ENG R. SCOTT DATE 26 OCT 83	PROD DATE	ISSUED SECTION A

ITEM NO.	DRAWING NO.	PART NO.	DESCRIPTION	QUANTITY / VARIATION KL1Ø-RA	KL1Ø-RC	KL1Ø-RE	NOTES: / REF DESIGNATION
21	MD-1Ø-DGYBB-*-YB		KL1Ø SYSTEM CUSP DISKETTE #2	1	1	1	
22	MD-1Ø-DKYCA-*-YB		KL1Ø DTE2Ø & E-BOX CUSP DISKETTE	1	1	1	
23	MD-1Ø-DHYKF-*-YB		KL1Ø FUNCTIONAL DTE2Ø INTERFACE	1	1	1	
24		ZT1Ø1-RL	TOPS-2Ø KLAD PACK KIT	1	-	-	
25		ZH215-RL	TOPS-1Ø KLAD PACK KIT	-	1	1	
26	EK-ØKL1Ø-MP-ØØ1		KL1Ø BLOCK DIAGRAMS	1	1	1	
27		LA12Ø-DA	LA12Ø-BA WITH H715Ø POWER SUPPLY	1	1	1	
28		3700738-01	PACKAGING INSTRUCTION	3	3	3	
29		MP-ODB11-AØ	CUSTOMER PRINT SET DB11-A	1	1	1	

E.C.O. NO.

"THIS DRAWING AND SPECIFICATIONS, HEREIN, ARE THE PROPERTY OF DIGITAL EQUIPMENT CORPORATION AND SHALL NOT BE REPRODUCED OR COPIED OR USED IN WHOLE OR IN PART AS THE BASIS FOR THE MANUFACTURE OR SALE OF ITEMS WITHOUT WRITTEN PERMISSION. COPYRIGHT ©1983 DIGITAL EQUIPMENT CORPORATION"

DRB 125

TITLE	ASSY NO.	SIZE	CODE	NUMBER	REV.
SHIP LIST KL1Ø-R		B	PL	KL1Ø-R-SH	A
	SHEET 2 OF 2	INSERTION PARTS LIST DATA BASE REV			

MRO

"THIS DRAWING AND SPECIFICATIONS, HEREIN, ARE THE PROPERTY OF DIGITAL EQUIPMENT CORPORATION AND SHALL NOT BE REPRODUCED OR COPIED OR USED IN WHOLE OR IN PART AS THE BASIS FOR THE MANUFACTURE OR SALE OF ITEMS WITHOUT WRITTEN PERMISSION. COPYRIGHT © 1980, DIGITAL EQUIPMENT CORPORATION"

LEGEND	
PART NO.	VARIATION
7018288-00	USES 5414506-00(NOT USED)
7018288-01	USES 5414506-01

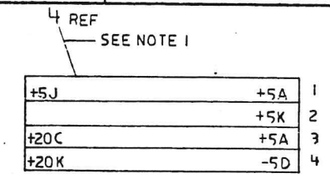

DETAIL "A"
SCALE: 1/1

NOTES:

1. PEEL OFF STRIPS 1 & 2 OF ITEM 4 AND LOCATE AS SHOWN ON FRONT PLATE (ITEM #2).
2. INSTALL HARNESS CONNECTORS P1 THRU P8 AS SHOWN, TO TOP ROW OF VOLTAGE MONITOR BOARD (ITEM #19). INSTALL HARNESS CONNECTORS P9 THRU P12 AS SHOWN, TO BOTTOM ROW OF VOLTAGE MONITOR BOARD.
3. ITEM #18, 12, 13, 14, 15, 8, 20 (QTY 1) ARE SHIPPED LOOSE PIECE AND USED FOR INSTALLATION. FOR INSTALLATION PROCEDURE SEE ITEM #16 (A-SP-7018288-0-1). SEE ITEM #11 FOR PACKAGING KIT.
4. GROUND DECAL (ITEM #8) IS USED BOTH AT ASSEMBLY AND AT INSTALLATION. ONE IS TO BE SHIPPED PER NOTE 3.
5. FOR USE OF ITEM #20, TAB TERMINATOR, SEE INSTALLATION PROCEDURE.

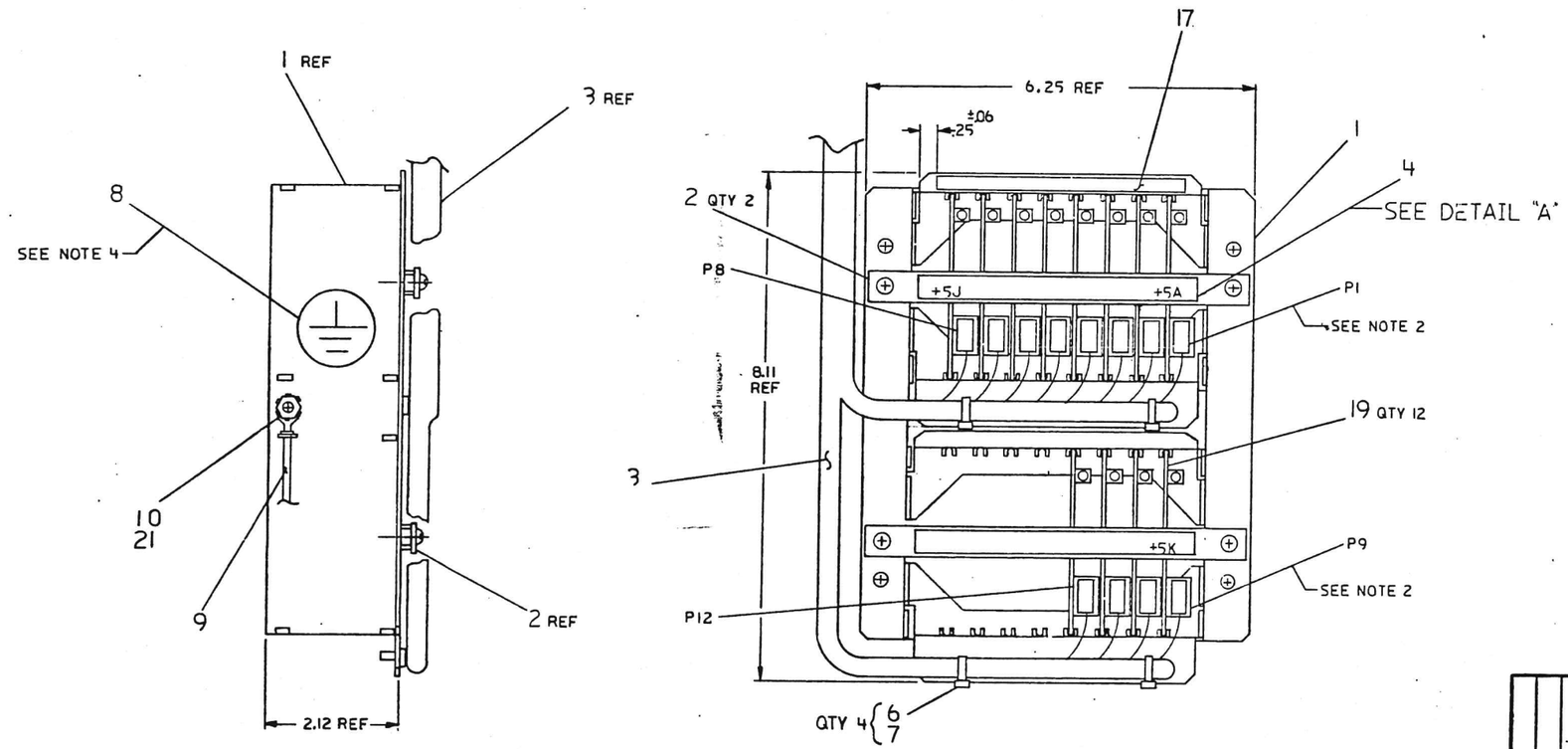

CAUTION: OFF SHEET PARTS LIST EXIST
SEE K-PL-7018288-0-DBP

REVISIONS		
CHK	CHANGE NO.	REV.
	KLIO-E-MR017	B
	7-MAR-82 BRUCE WEAVER	
	4/6/82	

DESCRIPTION	DWG./PART NO.	ITEM NO.
UNLESS OTHERWISE SPECIFIED DIMENSIONS ARE IN INCHES		

ANGLES ±0° 30'
SURFACE QUALITY IN MICROINCHES
CLASS OF ACCURACY (CHECK ONE)
MEDIUM
PREFERRED
NOMINAL DIMENSION RANGE INCHES: OVER 0 TO 0.2; OVER 0.2 TO 1.2; OVER 1.2 TO 4.0; OVER 4.0 TO 12.0; OVER 12.0 TO 40.0; OVER 40.0 TO 80.0
±.004 ±.008 ±.012 ±.016 ±.024 ±.04
±.012 ±.016 ±.025 ±.04 ±.063 ±0.1

QUANTITY & VARIATION

THIRD ANGLE PROJECTION

REMOVE BURRS AND BREAK SHARP CORNERS

DO NOT SCALE DWG

MATERIAL SEE PARTS LIST
FINISH NONE

DRN. 27JUN80
CHK'D 17Jul80
ENG. 17Jul80
PROJ. ENG. 17Jul80
PROD.

NEXT HIGHER ASSY. D-UA-KLIO-E-0
SCALE FULL
SHEET 1 OF 1

FIRST USED ON KLIO-E digital

TITLE ASSY, DC VOLTAGE MONITOR I/O #1

SIZE D | CODE AD | NUMBER 7018288-0-0 | REV. B
DIST.

MR

AUTOMATED BY PRTLST.3P(44) | PARTS LIST | SHEET A1 OF A1

LINE	ITEM	DOCUMENT NUMBER	PART NUMBER	DESCRIPTION	QUANTITY PER VARIATION 00	01
1	1	D-IA-7018180-0-0	7018180-00	WELDMENT,CARD CAGE	1	1
2	2	C-IA-7424854-0-0	7424854-00	PLATE,FRONT	2	2
3	3	J-IA-7018286-0-0	7018286-00	HARNESS I/O SHORT	1	1
4	4		3617588-00	LABEL,DCV MONITOR	1	1
5	5		5414506-00	VOLTAGE MONITOR BOARD	12	-
6	6		9007867-00	MOUNT, PUSH,CABLE TIE	4	4
7	7		9007031-00	TIE,CABLE BUNDL.DIA 0- 3/4"=101	4	4
8	8		3613272-00	LABEL,ADH BACK,MYLAR CAP	2	2
9	9		1213756-12	GROUND STRAP	1	1
10	10		9006563-00	NUT,KEP 8-32X 11/13AF	1	1
11	11		3700599-00	PKG KIT DC VOLTAGE MONITOR	1	1
12	12		9007786-00	RETAINER, U-NUT, 10-32	2	2
13	13		9006073-03	SCREW,TRUS,PHIL, 10-32X 1/2	3	3
14	14		9007651-00	WASHER, LOCK, EXTERNAL TOOTH #10	4	4
15	15		9006565-00	NUT,KEP 10-32X 3/8 AF	1	1
16	16	A-SP-7018288-0-1	7018288-00	MONITOR DC VOLT I/O NO. 1 ASSY.	REF	REF
17	17		3617997-01	LABEL,DIB20 OPTION VOLTAGES	1	1
18	18		9007032-00	TIE,CABLE BUNDL.DIA 0-1-3/4"=101	25	25
19	19		5414506-01	VOLTAGE, MONITOR BOARD	-	12
20	20		9009110-00	TERM,TAB .365TAB 2POS	-	4
21	21		9008151-00	WASHER, LOCK, EXT. TOOTH #8	1	1

REVISION HISTORY			BASIC PART NO: 7018288										
ENG	ECO NUMBER	REV	SECTION A OF A	DRN: JIM SICARD	DATE: 30-JUN-80		D	I	G	I	T	A	L
	INITIAL	A	SECTION. VARIATION INDEX	CHK'D: J. HUSON	DATE: 17-JUL-80	TITLE	PARTS LIST						
BW	KL10-E-MR017	B	[A] 00,01			ASSY,DC VOLTAGE MONITOR I/O #1							
			[B]	DES.ENG.: P. PORRECA	DATE: 17-JUL-80								
			[C]			DOCUMENT NUMBER							
			[D]	RESP.ENG.: P. PORRECA	DATE: 17-JUL-80	SIZE	CODE	NUMBER				REV	
			[E]	MFG.ENG.: M. CAPPELLO	DATE: 12-SEP-80	K	PL	7018288-0-OBP				B	
			[F]	ASSEMBLY NUMBER: D-AD-7018288-0-0	TOP DOCUMENT NUMBER: D-UA-KL10-E-0	FILE NAME: Z11668.PLS						EDIT # 3	

"THIS DRAWING AND SPECIFICATIONS HEREIN, ARE THE PROPERTY OF DIGITAL EQUIPMENT CORPORATION AND SHALL NOT BE REPRODUCED OR COPIED OR USED IN WHOLE OR IN PART AS THE BASIS FOR THE MANUFACTURE OR SALE OF ITEMS WITHOUT WRITTEN PERMISSION.
COPYRIGHT (C) 1982. DIGITAL EQUIPMENT CORPORATION "

MR

THIS DRAWING AND SPECIFICATIONS, HEREIN, ARE THE PROPERTY OF DIGITAL EQUIPMENT CORPORATION AND SHALL NOT BE REPRODUCED OR COPIED OR USED IN WHOLE OR IN PART AS THE BASIS FOR THE MANUFACTURE OR SALE OF ITEMS WITHOUT WRITTEN PERMISSION.
COPYRIGHT © '77 / DIGITAL EQUIPMENT CORPORATION

COMPONENT SIDE VIEW

REWORK INSTRUCTIONS

INITIAL RELEASE
COMPONENT ADDS SIDE1 AS SHOWN

O-1 SW1 (P/N 1211164-00, SW DIP 1A 4POS)
- A. CLIP OFF BOTH LEADS OF SW1-4 FLUSH WITH SWITCH BODY
- B. INSERT SWITCH INTO 6 PIN'S AT AT THE TOP R1.

O-2 R12 (P/N 1300447, 4.70K .25W 5.0%)
- A. ADD TEFLON THIN WALL TUBING (P/N 9107807-11 TO BOTH LEADS.
- B. INSERT R12 INTO 2 PTH'S BENEATH SW1-4

NOTE: DIRECTIONS ARE GIVEN WITH RESPECT TO MODULE BEING POSITIONED WITH CONNECTOR J1 TOWARD USER.
INDICATE MODULE REVISION AS "A"

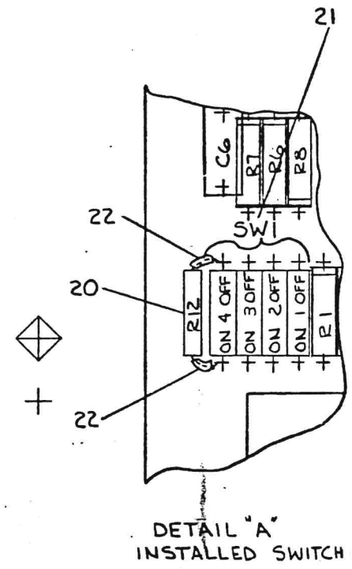

DETAIL "A"
INSTALLED SWITCH (SW1)

SWITCH SW1

SWITCH POSITION	VOLTAGE ±20	±15	±5
1	OFF	OFF	ON
2	OFF	ON	OFF
3	ON	OFF	OFF
4	NOT USED		

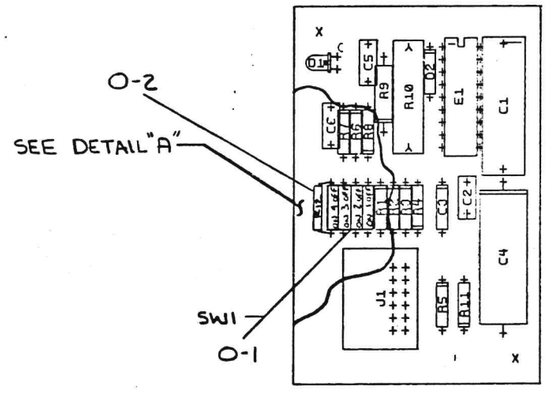

NOTES: 2ML74

STEP E.	↑ Y AXIS 25 STEP 3 TIMES
REPEAT	→ X AXIS 25 STEP 4 TIMES

CHK	CHANGE NO	REV

ETCH REV.

SIGNATURES	DATE
DRN.	
CHK'D.	
MECH. ENG.	
PROJ. ENG.	
PROD.	
SCALE 2/1	
SHT. 1 OF 1	
NEXT HIGHER ASSY.	

digital

TITLE VOLTAGE MONITOR BOARD

SIZE	CODE	NUMBER	REV
D	UA	54-1506-1-0	E

MR 1 MS# 190515A

DUA 54-1506-1-0 E

AUTOMATED BY PRTLST,3P(44) — P A R T S L I S T — SHEET A1 OF A1

LINE	ITEM	DOCUMENT NUMBER	PART NUMBER	DESCRIPTION	QTY PER VARIATION 01	REFERENCE DESIGNATOR
1	1	D-MD-5014505-0-0	5014505-00	DRILL AND ETCH BRD.	1	
2	2		1000075-00	25 MFD 25V +75-10% AL EL	1	C1
3	3		1000004-00	.02 MFD 100V 20% Z5U DISC	1	C2
4	4		1001610-00	.01 MFD 50V +80-20% Z5U CER	1	C3
5	5		1000080-00	50 MFD 50V +75-10% AL EL	1	C4
6	6		1010274-01	.22 MFD 50V +80-20% Z5U CER	2	C5,C6
7	7		1117373-00	LED ASSY GREEN	1	D1
8	8		1105796-00	1N 4004 PIV=400 I= 1A D041 SP	1	D2
9	9		1217652-00	HEADER 12PIN RT ANGLE,DBL RO	1	J1
10	10		1317925-00	6.98 K .25 W .10% RN55E-B 2	1	R1
11	11		1317924-00	36.50 K .25 W .10% RN55E-B 2	1	R2
12	12		1317923-00	51.10 K .25 W .10% RN55E-B 2	1	R3
13	13		1317922-00	732.0 .25 W .10% RN55E-B 2	1	R4
14	14		1305355-00	7.0 K .25 W .10% RN55C-B 5	1	R5
15	15		1300365-00	1.0 K .25 W 5.0 % CC	2	R6,R7
16	16		1300250-00	150.0 .25 W 5.0 % CC	1	R8
17	17		1300347-00	680.0 .50 W 5.0 % CC	1	R9
18	18		1300368-00	1.0 K 1.0 W 5.0 % CC	1	R10
19	19	SEE NOTE #1	1917657-00	3544J LOW-VOLT SUPERVISORY	1	E1
20	20		1300447-00	4.70 K .25 W 5.0 % CC	2	R11,R12
21	21		1211164-00	SW,DIP 1P 1A 4POS	1	SW1
22	22		9107807-11	TUBING,THIN WALL,.022ID UL	A/R	

23 NOTE: 1.THIS PART CAN BE MARKED SG2544J/DEC3544J.

REVISION HISTORY			BASIC PART NO: 5414506			
ENG	ECO NUMBER	REV	SECTION A OF A			
---	INITIAL	A	SECTION,VARIATION INDEX	DRN: M,NORMAND	DATE: 22-SEP-81	DIGITAL
			[A] 01	CHK'D: R,W,CAUNTER	DATE: 1-OCT-81	TITLE PARTS LIST
			[B]			5414506-01
			[C]	DES,ENG: R,JOSEPHSON	DATE: 1-OCT-81	VOLTAGE MONITOR BOARD
			[D]			
			[E]			DOCUMENT NUMBER
			[F]	RESP,ENG: R,JOSEPHSON	DATE: 1-OCT-81	
			[H]			SIZE: K CODE: PL NUMBER: 5414506-1-DBP REV: A
			[J]			
			[K]	MFG,ENG: T,CAVANAUGH	DATE: 1-OCT-81	
			[L]			
			[M]	ASSEMBLY NUMBER: D-UA-5414506-1-0	TOP DOCUMENT NUMBER: B-DD-54145-5-1	FILE NAME: Z3208A,PLS EDIT #: 4
			[N]			

"THIS DRAWING AND SPECIFICATIONS HEREIN, ARE THE PROPERTY OF DIGITAL EQUIPMENT CORPORATION AND SHALL NOT BE REPRODUCED OR COPIED OR USED IN WHOLE OR IN PART AS THE BASIS FOR THE MANUFACTURE OR SALE OF ITEMS WITHOUT WRITTEN PERMISSION.
COPYRIGHT (C) 1981, DIGITAL EQUIPMENT CORPORATION "

MR

"THIS DRAWING AND SPECIFICATIONS, HEREIN, ARE THE PROPERTY OF DIGITAL EQUIPMENT CORPORATION AND SHALL NOT BE REPRODUCED OR COPIED OR USED IN WHOLE OR IN PART AS THE BASIS FOR THE MANUFACTURE OR SALE OF ITEMS WITHOUT WRITTEN PERMISSION. COPYRIGHT © 1981, DIGITAL EQUIPMENT CORPORATION"

NOTES:

1. JUMPER PADS TOGETHER TO RESET INDICATOR. RESET IS ALSO PROVIDED BY REMOVAL OF ALL POWER TO THE MODULE. RESET JUMPER MUST BE LESS THAN 100 OHMS MAXIMUM.

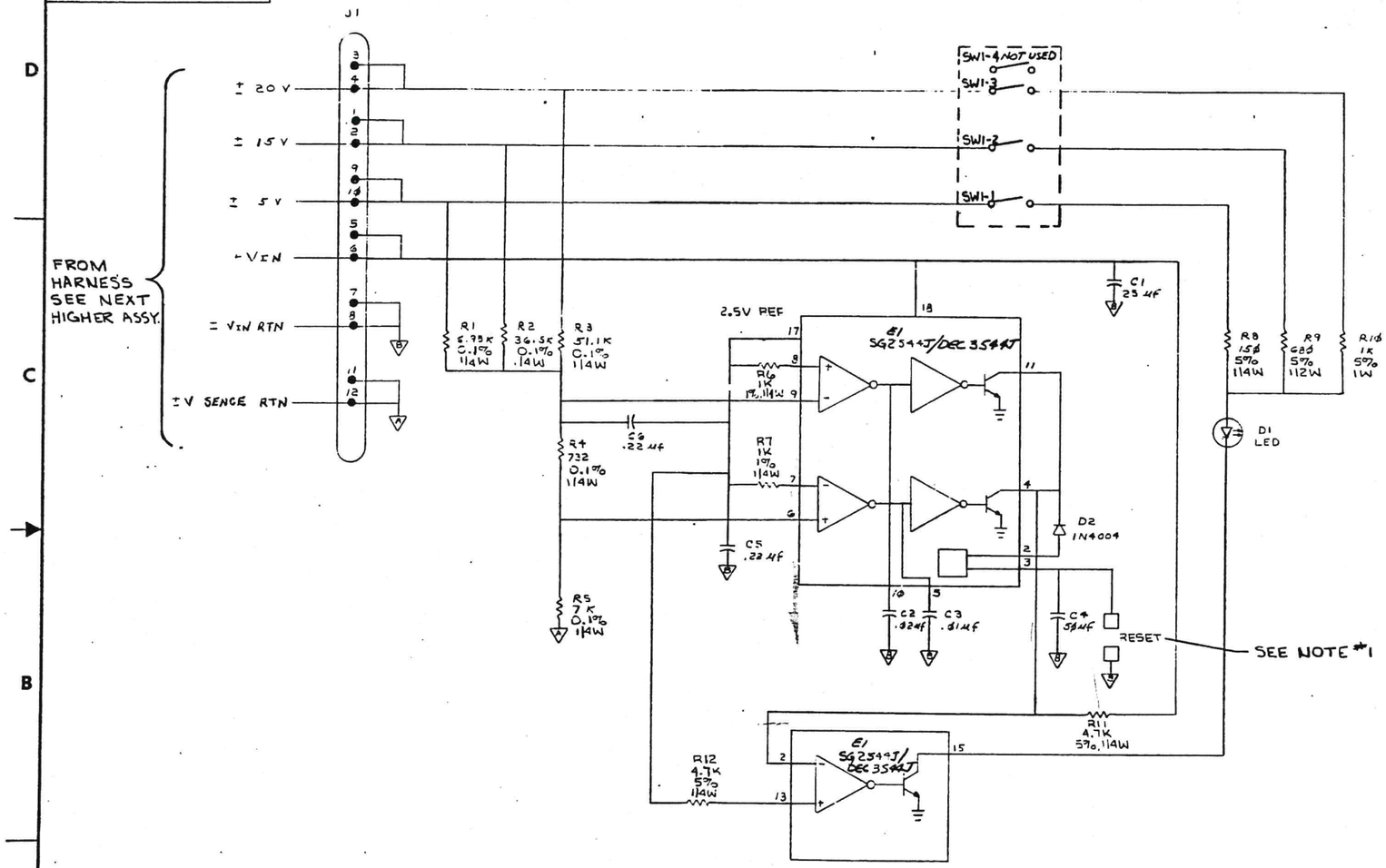

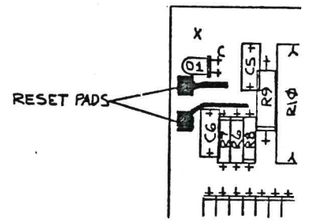

SWITCH POSITION	VOLTAGE ±20	±15	±5
1	OFF	OFF	ON
2	OFF	ON	OFF
3	ON	OFF	OFF
4	NOT USED		

SWITCH SW1

CAUTION: ONLY ONE SWITCH MUST BE ON FOR PROPER OPERATION OF THIS BOARD.

DRN M. Norman	22 Jan 81	FIRST USED ON KL10 digital
CHK'D RW Counter	10 Oct 81	TITLE VOLTAGE MONITOR BOARD
ENG.	10 Oct 81	
PROJ. ENG.	10 Oct 81	
PROD'T	1 Oct 81	
NEXT HIGHER ASSY. B-CD-5414506-1		SIZE D CODE CS NUMBER 5414506-1-1 REV. A
SCALE NONE		
SHEET 1 OF 1		DIST.

REVISIONS: CHK | CHANGE NO. | REV.

MR 1

This drawing and specifications, herein, are the property of Digital Equipment Corporation and shall not be reproduced or copied or used in whole or in part as the basis for the manufacture or sale of items without written permission.

DIGITAL EQUIPMENT CORPORATION
MAYNARD, MASSACHUSETTS

ENGINEERING SPECIFICATION

DATE Sept. 22,1981

TITLE VOLTAGE MONITOR

REVISIONS

REV	DESCRIPTION	CHG NO	ORIG	DATE	APPD BY	DATE

ENG	APPD	SIZE	CODE	NUMBER	REV
John Tivnan		A	SP	5414506-1-2	A

DEC 16-(392)-1078-N071
DRA 107

ENGINEERING SPECIFICATION — CONTINUATION SHEET

TITLE VOLTAGE MONITOR

1.0 General

1.1 This is a specification for a voltage monitor printed circuit bpard.

When the input voltage to the module is within its range and the correct switch is placed in the "on" position, a green LED is illuminated.

When the voltage goes out of range either on an overvoltage or undervoltage condition, the green LED is extinguished and this fault is latched.

1.2 Reference Documents

DEC STD 102 - Environmental Standard.
D-UA-5414506-1-0 Voltage Monitor Board

2.0 Electrical Specifications

2.1 Input Voltages

The following voltage input ranges are acceptable for monitoring:

+5V	0- +7V DC
+15V	0- +20V DC
+20V	0- +25V DC
-5V	0- -7V DC
-15V	0- -20V DC
-20V	0- -25V DC

2.2 Power Source

This module will operate from a power source of-4.5Vto -40V DC, or +4.5V to +40V DC.

2.3 Detection Band

This module will detect and extinguish the green LED display when the input voltage is out of the following bands:

SIZE	CODE	NUMBER	REV
A	SP	5414506-1-2	A

DEC FORM NO EN-01022-16-N370-(381)
DRA 108

ENGINEERING SPECIFICATION — CONTINUATION SHEET

TITLE VOLTAGE MONITOR

Switch	Voltage	Error Band (Fault when outside this range)
SW1-1	+/-5V	±5% ±1.5% (3.5% to 6.5%)
SW1-2	+/-15V	±5% ±1.5% (3.5% to 6.5%)
SW1-3	+/-20V	±5% ±1.5% (3.5% to 6.5%)

2.4 Reset

Reset pads are provided on the printed circuit board for local reset. Jumper reset pads together to reset the indicator. Reset is also provided by removal of all power to the module. Reset jumper must be less than 100 ohms maximum.

2.5 Turn-On Time Delay

An undervoltage fault will be disabled for $100^{\pm 20}_{ms}$ ms after the power source voltage is truned on.

2.6 Fault Duration

The over and/or under voltage condition must exist for a duration of time before detection.

Overvoltage Condition - 0.1_{ms}
Undervoltage Condition - 0.2_{ms}

2.7 Operating Power

Current drain is 16 ma during normal operation. Current drain during a fault condition is 22 ma.

2.8 Operating Voltage

Module will operate as long as power source voltage is greater than 4.5V. Duration of true indication may be lengthened by connecting power source voltage to a voltage higher than being monitored.

If the module is operated from the voltage it is monitoring, it will not indicate (at all) upon loss of the voltage.

3.0 Output

3.1 Indicator

Normal operation of the voltage is indicated by an illuminated green LED. Abnormal voltage is indicated by the lack of illumination by the green LED.

SIZE	CODE	NUMBER	REV
A	SP	5414506-1-2	A

DEC FORM NO EN-01022-16-N370-(381)
DRA 108

ENGINEERING SPECIFICATION — CONTINUATION SHEET

TITLE VOLTAGE MONITOR

4.0 Mechanical and Physical

4.1 Size - Printed circuit board 2.0 x 3.0 in. Maximum height is 0.5 in.

4.2 Weight

4.3 Mounting - Any position

4.4 Cooling - Natural convection.
Power may range from 100 mw to 650 mw depending upon power source voltage.

4.5 Temperature Range

- Per DEC Std 102 for Class B environment

4.6 Altitude - 8000 ft - operate

4.7 Vibration - Per DEC Std 102 Class B

4.8 Mechanical Shock - Per DEC Std 102

5.0 Reliability

MTBF goal is greater than 200,000 hours for ground benign environment per MIL - HDBK 217B based on parts count.

6.0 Safety

Not applicable

7.0 Input-Output Connector

J1 Part Number 12-17652-00 Mates with 12-14112-03 connector. Cortacts in mating connector are 12-151121-00

Signals

J1-1	15V INPUT
J1-2	15V INPUT
J1-3	20V INPUT
J1-2	20V INPUT
J1-5	INPUT VOLTAGE
J1-6	INPUT VOLTAGE
J1-7	INPUT VOLTAGE RETURN
J1-8	INPUT VOLTAGE RETURN
J1-9	5V INPUT
J1-10	5V INPUT

SIZE	CODE	NUMBER	REV
A	SP	5414506-1-2	A

DEC FORM NO EN-01022-16-N370-(381)
DRA 108

J1-11 SENSE VOLTAGE RETURN
J1-12 SENSE VOLTAGE RETURN

In addition, two printed circuit pads are provided for reset.

PART NO	VARIATION	REV
7016018-00	MF20	B1
7016018-01	MG20	A1

NOTES:

1. LOCATE ADHESIVE BACKED MOUNT (ITEM 27) APPROX. WHERE SHOWN.
2. INSTALL FOAM TAPE (ITEM 29) ON ALL FOUR SIDES OF WIRED ASSY (ITEM 1), TO SEAL CARD CAGE FROM AIR LEAKS.
3. FOR: -00 VARIATION, USE ITEM 26.
   -01 VARIATION, USE ITEM 31.

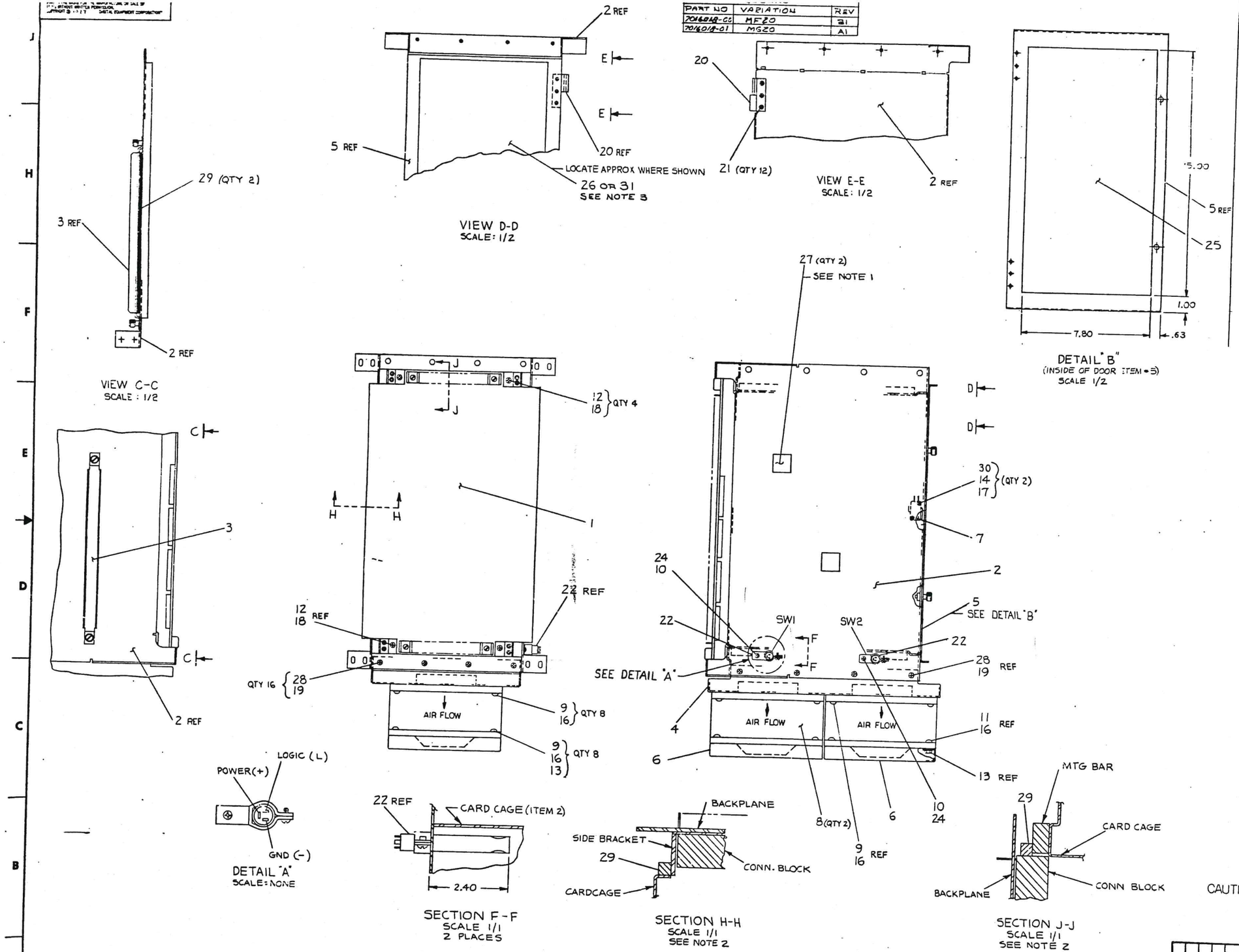

CAUTION:
OFF SHEET PARTS LIST
EXIST B-PL-7016018-0-0

REVISIONS		
CHK	CHANGE NO.	REV.
	MF20-MR005	A
	G JUN 80	
	J. MCELROY	
	MF20-MR006	B
	P. LAWRENCE	
	7016018-MR001	C
	BOB EICHMANN	

DESCRIPTION	DWG PART NO.	ITEM NO.
UNLESS OTHERWISE SPECIFIED DIMENSIONS ARE IN INCHES		

QUANTITY & VARIATION

THIRD ANGLE PROJECTION

REMOVE BURRS AND BREAK SHARP CORNERS

DO NOT SCALE DWG

MATERIAL: SEE PARTS LIST

DRN.
CHK'D
ENG.
PROJ. ENG.
PROD.
NEXT HIGHER ASSY.
E-UA-MF20-0-0

FIRST USED ON: MF20 digital

TITLE: CARD CAGE ASSY

SIZE | CODE | NUMBER | REV

E AD 7016018-0-0 C

AUTOMATED BY PRTLST.5R(55)

PARTS LIST

LINE	ITEM	TOP DOCUMENT	PART NUMBER	MIN REV	DESCRIPTION	QTY PER VARIATION 00	01
					VARIATION REVISION LEVEL:	B1	A1
1	1	E-AD-7014358-0-0	7014358-00		WIRED ASSY-MF20	1	1
2	2	E-IA-7014127-0-0	7014127-00		WELDMENT,CARD CAGE	1	1
3	3	C-IA-7419820-0-0	7419820-00		CABLE CLAMPS	1	1
4	4	D-IA-7420668-0-0	7420668-00		MOUNT,FAN	1	1
5	5	D-IA-7419083-0-0	7419083-00		PANEL FRONT DOOR	1	1
6	6	D-IA-7012686-0-0	7012686-00		FINGER GUARD	2	2
7	7		1210755-00		SW,LEVER 1PST 11A277VAC	1	1
8	8		1211747-00		FAN,TUBE AXIAL 7.0" 350CFM 115V	2	2
9	9		9006075-01		SCREW,MACH PAN PHIL 10-	16	16
10	10		9006022-01		SCREW,MACH PAN PHIL 6-	2	2
11	11		9006074-01		*** THIS ITEM IS NOT USED ***	-	-
12	12		9006074-03		SCREW,MACH TRUSS PHIL 10-	4	4
13	13		9007786-00		RETAINER,U-NUT 10-32X	8	8
14	14		9006557-00		NUT,HEX EXT TOOTH LCKWSHR 4-40	2	2
15	15		9006013-01		*** THIS ITEM IS NOT USED ***	-	-
16	16		9006635-00		WASHER,LOCK INTERNAL STEEL	16	16
17	17		9006632-00		WASHER,LOCK INTERNAL STEEL	2	2
18	18		9007651-00		WASHER,LOCK EXTERNAL STEEL	4	4
19	19		9006634-00		WASHER,LOCK INTERNAL STEEL	16	16
20	20	B-MD-7420769-0-0	7420769-00		HINGE,SLIP R.H.(REWORK)	2	2
21	21		9006458-00		RIVET,BLIND DOME 0.125DX0.275	12	12
22	22		1215413-00		SW,SOLID STATE VANE	2	2
23	23		9007834-00		*** THIS ITEM IS NOT USED ***	-	-
24	24		9006633-00		WASHER,LOCK INTERNAL STEEL	2	2
25	25		9008479-01		FOAM POLYURETHANE	A/R	A/R
26	26		3615747-00		LABEL,ADHESIVE BACK,MF20-L MODUL	1	-
27	27		9008264-00		MOUNT, CABLE TIE, ADHESIVE BACKE	2	2
28	28		9006037-03		SCREW,MACH TRUSS PHIL 8-	16	16
29	29		9008274-00		FOAM, TAPE 3/8" X 3/8" BLACK	A/R	A/R
30	30		9006014-01		SCREW,MACH PAN PHIL 4-	2	2

REVISION HISTORY			BASIC PART NO: 7016018
ENG	ECO NUMBER	REV	SECTION A OF A
BE	7016018-MR01A	C	SECTION.VARIATION INDEX [A]00,01 [B] [C] [D] [E] [F]

DRN: BOB PELLERIN	DATE: 13-JUN-78	D I G I T A L
CHK'D: G. FLANDERS	DATE: 13-JUN-78	TITLE PARTS LIST CARD CAGE ASSY
DES.ENG: J. MCELROY	DATE: 14-AUG-78	DOCUMENT NUMBER: SIZE K, CODE PL, NUMBER 7016018-0-DBP, REV C
RESP.ENG.: J. MCELROY	DATE: 14-AUG-78	
MFG.ENG.: L. QUARLES	DATE: 11-AUG-78	RELEASE DATE: 17-MAY-84
ASSEMBLY NUMBER: E-AD-7016018-0-0	TOP DOCUMENT NUMBER: E-AD-7016018-0-0	FILE NAME: Z9010C.PLS, EDIT #: 3

"THIS DRAWING AND THE SPECIFICATIONS CONTAINED HEREIN ARE CONFIDENTIAL AND PROPRIETARY. THEY ARE THE PROPERTY OF DIGITAL EQUIPMENT CORPORATION AND SHALL NOT BE REPRODUCED OR COPIED OR USED IN WHOLE OR IN PART AS THE BASIS FOR THE MANUFACTURE OR SALE OF ITEMS WITHOUT WRITTEN PERMISSION. THIS IS AN UNPUBLISHED WORK PROTECTED UNDER THE FEDERAL COPYRIGHT LAWS."

MR0

AUTOMATED BY PRTLST.5R(55)

P A R T S L I S T

LINE	ITEM	TOP DOCUMENT	PART NUMBER	MIN REV	DESCRIPTION	QTY PER VARIATION 00	01
					VARIATION REVISION LEVEL:	B1	A1
31	31		3615747-01		LABEL,MODULE REVISION HISTORY MG	-	1

D I G I T A L	TITLE: CARD CAGE ASSY	SECTION A OF A	SIZE: K / CODE: PL / DOCUMENT NUMBER: 7016018-0-DBP / REV: C

MRO