THE ANNALS OF THE COMPUTATION LABORATORY OF HARVARD UNIVERSITY

I	A Manual of Operation for the Automatic Sequence Controlled Calculator	1946
II	Tables of the Modified Hankel Functions of Order One-Third and of Their Derivatives	1945
III	Tables of the Bessel Functions of the First Kind of Orders Zero and One	1947
IV	Tables of the Bessel Functions of the First Kind of Orders Two and Three	1947
V	Tables of the Bessel Functions of the First Kind of Orders Four, Five, and Six	1947
VI	Tables of the Bessel Functions of the First Kind of Orders Seven, Eight, and Nine	1947
VII	Tables of the Bessel Functions of the First Kind of Orders Ten, Eleven, and Twelve	1947
VIII	Tables of the Bessel Functions of the First Kind of Orders Thirteen, Fourteen, and Fifteen	1947
IX	Tables of the Bessel Functions of the First Kind of Orders Sixteen through Twenty-Seven	1948
X	Tables of the Bessel Functions of the First Kind of Orders Twenty-Eight through Thirty-Nine	1948
XI	Tables of the Bessel Functions of the First Kind of Orders Forty through Fifty-One	1948
XII	Tables of the Bessel Functions of the First Kind of Orders Fifty-Two through Sixty-Three	1949
XIII–XV	(In Preparation)	
XVI	Proceedings of a Symposium on Large-Scale Digital Calculating Machinery	1948
XVII	Tables for the Design of Missiles	1948
XVIII	Tables of Generalized Sine- and Cosine-Integral Functions: Part I	1949
XIX	Tables of Generalized Sine- and Cosine-Integral Functions: Part II	1949
XX	Tables of Inverse Hyperbolic Functions	1949
XXI–XXIII	(In Preparation)	
XXIV	Description of a Relay Calculator	1949

THE ANNALS OF THE COMPUTATION LABORATORY OF HARVARD UNIVERSITY

VOLUME XXIV

LONDON: GEOFFREY CUMBERLEGE
OXFORD UNIVERSITY PRESS

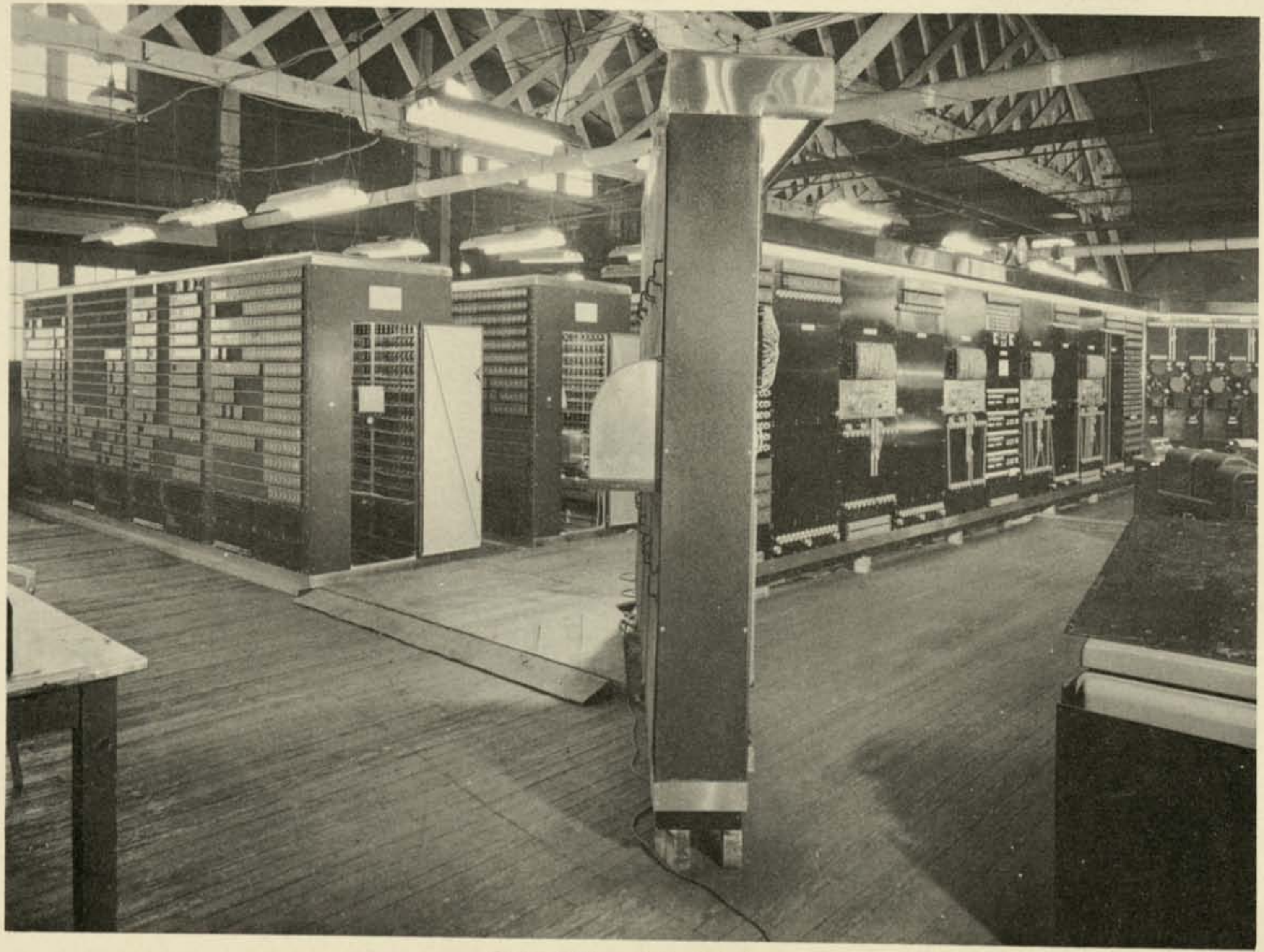

General View of the Calculator

DESCRIPTION OF A RELAY CALCULATOR

BY

THE STAFF OF THE COMPUTATION LABORATORY

CAMBRIDGE, MASSACHUSETTS
HARVARD UNIVERSITY PRESS
1949

Copyright, 1949
By the President and Fellows of Harvard College
(Reproduction in whole or in part is authorized and permitted.)

The opinions or assertions contained herein are the private ones of the writers and are not to be construed as official or reflecting the views of the Navy Department or of the naval service at large.

Printed in the United States of America

STAFF OF THE COMPUTATION LABORATORY

Howard H. Aiken
Professor of Applied Mathematics, Harvard University
Director of the Computation Laboratory

Samuel T. Favor
J. Orten Gadd, Jr.
John A. Harr
Robert L. Hawkins
Grace M. Hopper
Jacob Horowitz
Marshall Kincaid
Frederick G. Miller*
Herbert F. Mitchell, Jr.
Benjamin L. Moore
William A. Porter
Constance K. Rawson
Charles H. Richards
John W. Roche
Clarence Ross*
Theodore Singer
Robert E. Wilkins
Richard D. Woltman*
Way Dong Woo

Assistants

Jean E. Bryant
William G. Burke*
Allen G. Christensen
Carmela M. Ciampa
Peter O. Cioffi
Edward J. Culhan*
John T. Farren
Elizabeth J. Frazier
Ralph E. Frazier
Kenneth C. Hanna
Betty L. Jennings
Lloyd C. Kentfield
Arthur W. Kilroy*
Edward D. Reardon*
Robert W. Rose*
Adele O. Sheppett
Joseph A. Slanina*
Miriam B. Tamsky
Frank L. Verdonck
Frank M. Williams*

*** Member of the staff of the Naval Proving Ground**

PREFACE

In November 1944, the Bureau of Ordnance requested the Computation Laboratory, then operating as a Naval activity, to undertake the design and construction of an automatic digital calculator for installation at the Naval Proving Ground, Dahlgren, Virginia. At the time, an automatic computing facility was badly needed. Hence, Captain Charles C. Bramble, USNR, now director of the Department of Exterior Ballistics at the Naval Proving Ground, and Commander Willard E. Bleick, USNR, now Associate Professor of Mathematics at the United States Naval Academy, urged that the machine be so designed that its construction could be completed as soon as possible. Accordingly, it was decided to build a relay calculator. A preliminary report was prepared by Robert V. D. Campbell and the present writer, and work began soon after the approval of this report in February 1945.

The electrical circuits required by the machine were designed by Mr. Campbell, Frederick G. Miller, Kenneth M. Lockerby, Charles H. Richards, Marshall Kincaid, and others, assisted by a number of electrical draftsmen. Of these, Lloyd C. Kentfield and Enoch Green deserve special mention. The structural and mechanical design of the calculator and of its sequence and interpolator mechanisms was the work of Robert E. Wilkins, assisted by Samuel T. Favor. Of those who had worked on the design of the machine, Messrs. Miller, Wilkins, Richards, Kincaid, Favor, and Kentfield remained until the project was completed.

In addition to his design work, Mr. Miller acted as engineer in charge. He was assisted by William A. Porter, who supervised the many technicians who carried out the construction of the machine.

The relays employed by the calculator were designed by the staff of the Computation Laboratory in collaboration with Harold Seaton, electrical engineer of the Autocall Company, Shelby, Ohio. In this connection, the advice of Reinhold Rudenberg, Professor of Electrical Engineering, Harvard University, is acknowledged.

The tape punches, tape readers, and page printers employed as input and output devices were supplied by the Western Union Telegraph Company after many consultations with Messrs. K. B. Mitchell, R. F. Dirkes, and A. E. Frost. Messrs. Dirkes and Frost collaborated with the staff of the laboratory in adapting this standard printing equipment to meet the requirements of digital computing machinery.

When the calculator was nearing completion, Richard D. Woltman and Clarence Ross of the Naval Proving Ground temporarily joined the staff of the laboratory and together with Herbert F. Mitchell assisted in testing the machine and in developing coding techniques. The machine was disassembled and moved to its present location during February and March 1948. By June of that year the calculator had been reassembled by Mr. Miller with the assistance of Dr. Ross, Mr. Woltman, and those technicians formerly employed in the construction of the machine who had been transferred to the staff of the Naval Proving Ground. Operation on a production schedule was begun in September 1948, under the direction of Dr. Bramble.

Work on the present volume describing the machine and its operation was begun in December 1947 by Grace M. Hopper, assisted by Constance K. Rawson, Peter O. Cioffi, and Mr. Woltman; it was completed by Mr. Richards and Dr. Mitchell. Examples 2 and 3 of Chapter XI were supplied by Dr. Ross and Mr. Woltman.

An important part of this manual is the illustrative material. The drawings, diagrams, and charts were made by Carmela M. Ciampa, assisted by Adele O. Sheppett and Miriam B. Tamsky. Photographic plates were made by Paul Donaldson, photographer of Cruft Laboratory, who also photographed all pages for reproduction by offset printing. The manuscript was prepared for publication by Betty L. Jennings, Elizabeth J. Frazier, and Frank L. Verdonck.

The construction of the calculator and the preparation of this volume fulfill the requirements of Task A of contract NOrd-8555 between the Bureau of Ordnance and Harvard University. This contract was administered by section Re3d of the Bureau of Ordnance, of which Captain G. T. Atkins, USN, Commander J. H. Carmichael, USN, and Albert Wertheimer were the cognizant officials. Their continued interest and advice in support of the project are deeply appreciated. Finally, the staff of the Computation Laboratory wish to express their gratitude to the Chief of the Bureau of Ordnance for the privilege of publishing this volume.

HOWARD H. AIKEN

Cambridge, Massachusetts
January 1949

CONTENTS

Chapter Page

I The Organization of the Calculator 1

II Basic Circuits 41

III Registers 51

IV The Addition Units 67

V The Multiplication Units 88

VI Sequencing and Control 118

VII The Elementary Functions 153

VIII Interpolators 195

IX Input and Output Devices 219

X Operation of the Calculator 254

XI Problem Preparation and Solution of Typical Examples 264

Appendix I List of Codes 323

Appendix II The Method of Round-off 333

Appendix III Auxiliary Tape Punching Equipment 336

Index 361

LIST OF PLATES

General View of the calculator . . . . frontispiece
I. Main Control Board and Wings . . . . (facing page) 1
II. Floor Plan of the Calculator 3
III. Operator's Table and Printers 4
IV. Test and Operating Panels 5
V. Cam Unit. 6
VI. Tape Preparation Table. 11
VII. Tape Reproduction Table 12
VIII. Relay Cubicles 13
IX. Relays: latch type below 14
X. Cam Unit: details of cam-controlled contacts 17
XI. Cam Unit: rear view showing arc suppression circuits and drive motor . . . 18
XII. Control Panel: detail showing read-out lights 19
XIII. Sequence Mechanism and Roller Panel. 20
XIV. Switches: left side of calculator 23
XV. Interpolators 24
XVI. Functional Tape Preparation Unit 27
XVII. Tape-Reading and Tape-Punching Mechanisms 28
XVIII. Control Tape Preparation Unit 31
XIX. Sequence Mechanism: detail showing sensing pins and control tape 32
XX. Main Control Board: rear view showing sequence mechanisms 35
XXI. Interior of Relay Cubicle 36
XXII. Sequence Mechanism 119
XXIII. Sequence Mechanism: interior view 121
XXIV. Operating Panel. 128
XXV. Test Panels A and B 147
XXVI. Left Wing of Calculator: interpolator mechanisms 194
XXVII. Interpolator Mechanisms: rear view 197

LIST OF PLATES

XXVIII. Front Panel of Interpolator Mechanism 200
XXIX. Interpolator Mechanism: interior view 203
XXX. Detail of Tape-Reader and Tape-Punch 220
XXXI. Printer: interior view showing vanes 222
XXXII. Right Wing of Calculator: tape-readers and tape-punches 225
XXXIII. Lower Portion of Main Control Panel 230
XXXIV. Relay Bank and Rotary Switch 233
XXXV. Switches on Operator's Table 251

A RELAY CALCULATOR

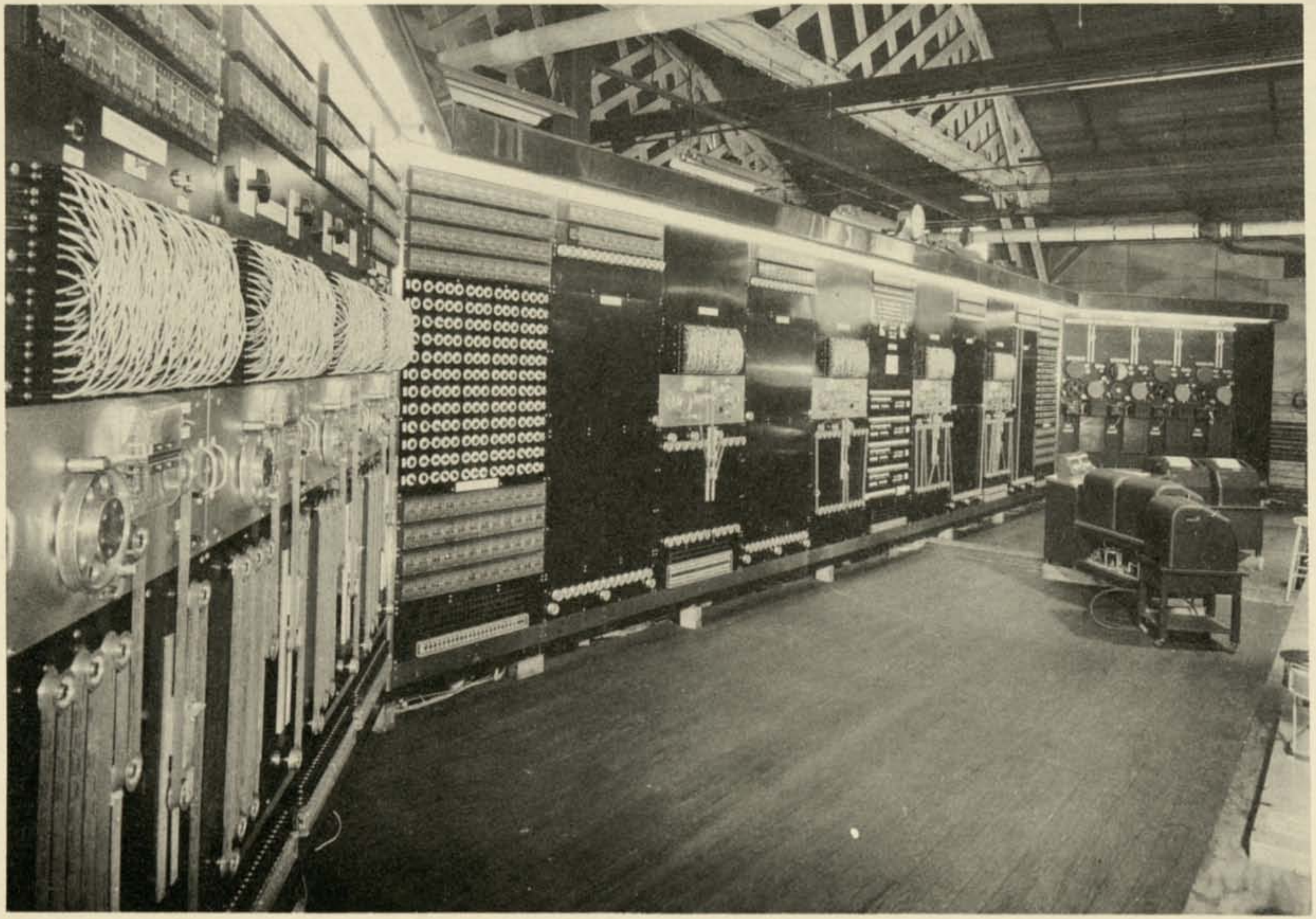

Plate I Main Control Board and Wings

CHAPTER I

THE ORGANIZATION OF THE CALCULATOR

In November, 1944, the Bureau of Ordnance of the Navy Department requested the Staff of the Computation Laboratory to undertake research and development leading to the design and construction of a large-scale digital computing machine for the Naval Proving Ground at Dahlgren, Virginia. The necessity for rapid completion of the calculator to meet wartime and postwar demands for computation, and the well-developed techniques using electro-magnetic relay circuits for computing, were factors leading to the decision to build a relay machine. Preliminary research was concluded in the spring of 1945 and the actual design of the calculator begun. Construction of the machine started about a year later. The various units of the machine operated under test conditions during the Symposium on Large-Scale Digital Calculating Machinery at Harvard University in January, 1947. In August of that year the machine completed the solution of test problems. Its operation is tape-controlled and is completely automatic. It can handle numerical quantities consisting of ten significant digits within the range 10^{-15} to 10^{+15}.[1]

The calculator's main control board, Plate I, is flanked by two wings, and behind this board are ranged six relay cubicles as shown on the floor plan, Plate II. Facing the main control board is the operator's table, Plate III, on which are mounted the output printers. Behind the operator's table, opposite the main control board, stand two test panels, Plate IV. The switches on these panels may be manually preset to control any portion of the machine for a period of one or two seconds. The cam unit, Plate V, supplying the timed electrical impulses which operate the calculator, is housed in a small room to the rear of the machine. A second room contains two small auxiliary units, independent of the calculator: the tape preparation table, Plate VI, and the tape reproduction table, Plate VII.

The calculator may be operated in its entirety upon a single problem, or, since all components are duplicated on the right and left "sides" of the machine, it may be operated as two independent calculators. In this event, two problems may be solved at the same time provided that neither requires more than one-half the storage or sequencing capacity of the machine as a whole. Mounted on the main control board are the four sequence mechanisms which control the operations to be performed, the switches connecting the two halves of the machine, a number of trouble indicator lights, lights into which numerical quantities may be read, and the switches controlling the alarm circuits and the typography of the printed pages. Two panels, one on either side of the central portion of the main control boards, carry dial switches for the storage of such constants as may be required in the solution of a particular problem. Four interpolator mechanisms and their related switches are mounted on the left wing and four tape reading and tape punching mechanisms on the right wing. Indicator lights and switches used in starting and stopping the calculator are mounted between the test panels.

Approximately 13,000 electro-mechanical relays are employed in the storage, computing, and control circuits of the machine. Most of these are mounted on the relay cubicles, Plate VIII. The relays, Plate IX, have six double-throw contacts and are of three types; single coil spring return, double coil spring return, and mechanically self-latching. With the exception of a few components peculiar to each of the three types, all relays are assembled from the same electrical and mechanical parts. Further, they are jack-connected, and all soldered connections are made to the sockets. This permits rapid removal of the relays for testing. The molded bakelite frames of the relays and of the sockets are color-coded in order to distinguish quickly between the three types: single coil relays are red, double coil are green, and the latch type are black. The relays are mounted on the outside of the cubicles to permit observation through glass dust covers of their behavior under operating conditions. Each silver contact has a pressure of at least 30 grams in both the normally open and normally closed positions. For the single and double coil relays, the average operate time is less than seven milliseconds. The relays are tested for a maximum of ten milliseconds, and operated by impulses of somewhat less than 16 2/3 milliseconds duration, affording an ample margin of safety in operation.

The storage registers of the calculator are composed of the latch type relays. These relays have two operating coils, each of which can transfer the contacts in one direction only, and a double-acting mechanical latch which maintains the contacts in position. As they are used in the calculator, a pick-up impulse is passed through one coil of the relay transferring the contacts to their normally open position where they are mechanically locked until such time as the second coil receives a resetting impulse transferring the contacts to the normally closed position. Two major advantages result from the use of latch relays for storage; first, no power is required to maintain the relays in either position. Hence the power consumption of the calculator is low and no auxiliary cooling equipment is required. Second, even if the power fails, all numerical values necessary to the computation in process are preserved in the machine. The latch relays are tested for eleven milliseconds operate time for both reset and pick-up and controlled by 16 2/3 milliseconds impulses. All three types of relays are operated on 100 volts d.c. and draw coil currents of approximately 60 milliamperes.

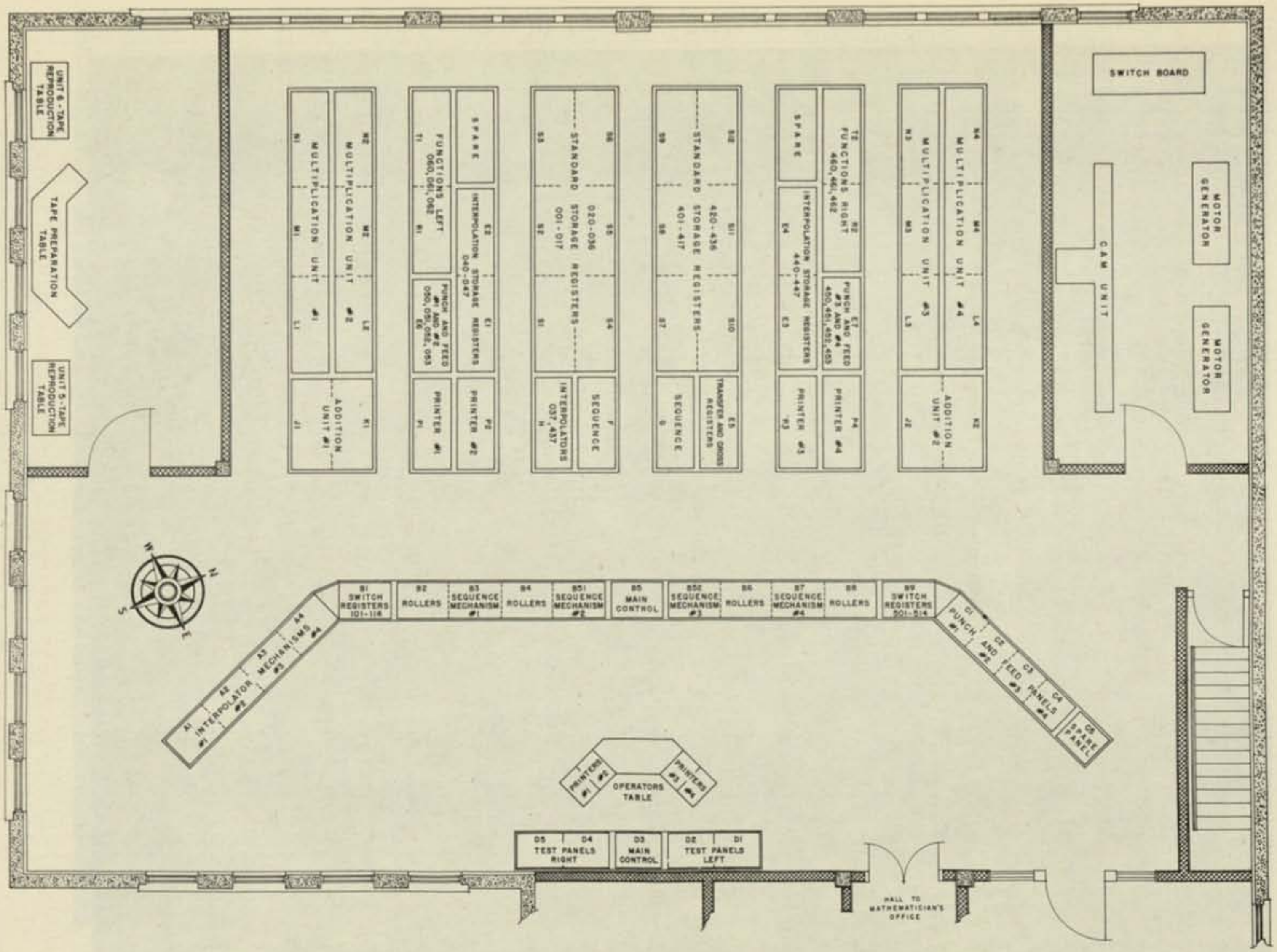

Plate II Floor Plan of the Calculator

Plate III Operator's Table and Printers

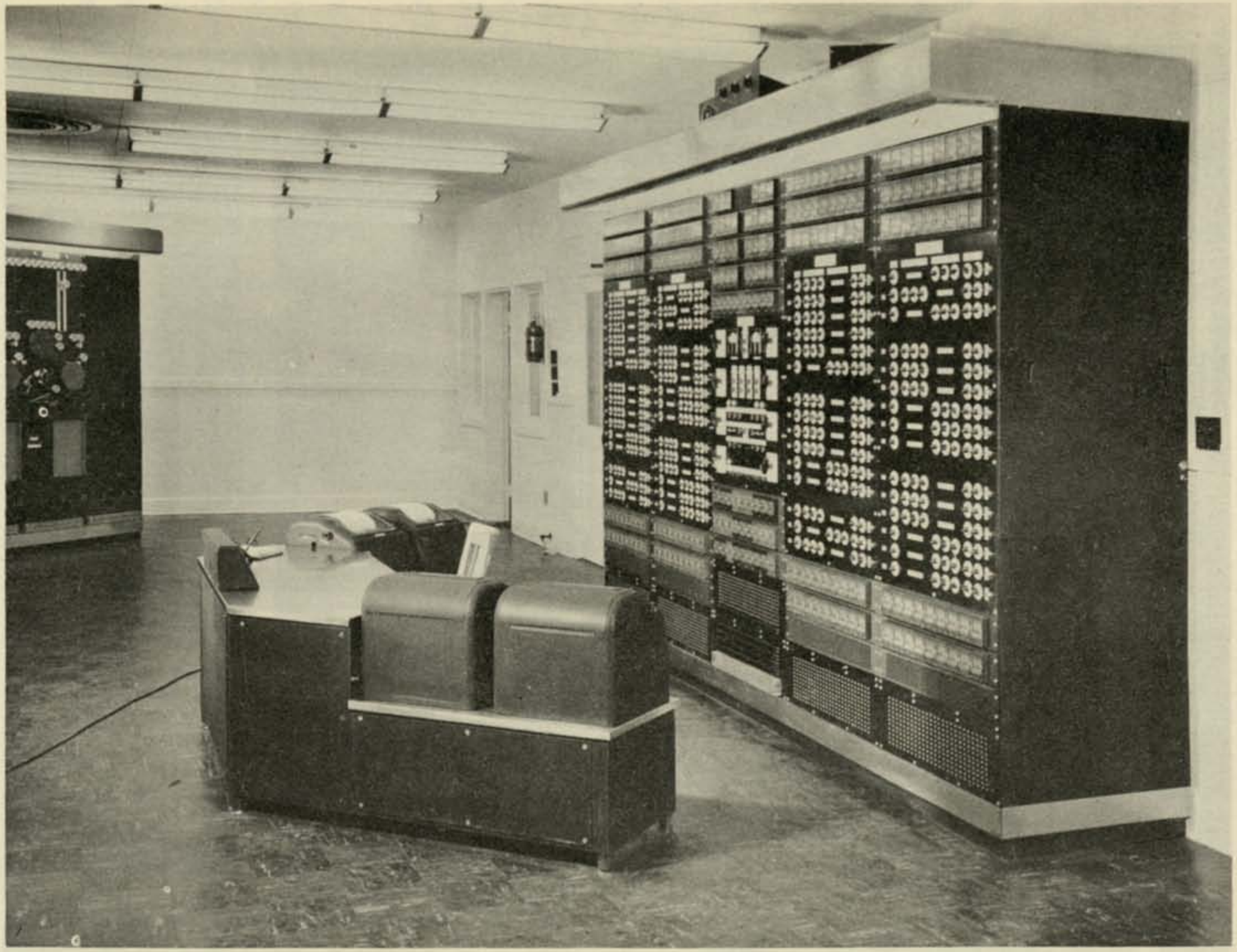

Plate IV Test and Operating Panels

Plate V Cam Unit

THE ORGANIZATION OF THE CALCULATOR

In general, the relay contacts are used as circuit positioning devices only and are not required to make or break any currents. The cam unit, previously mentioned, Plates X and XI, consists of about 800 molded plastic cams controlling contacts provided for this purpose. Except for the input, output, and sequencing units, the timing of the entire machine is synchronized by the impulses derived from these contacts. The time scale of the calculator consists of 60 impulses, each of approximately 16 2/3 milliseconds duration, per second or machine cycle. Each elementary operation, such as a number transfer, an addition, or a multiplication is assigned specific impulses occurring at fixed intervals. Hence each machine operation requires a definite period of time, regardless of the particular digits or quantities involved. Once each second, the complete pattern of impulses is repeated, defining the basic cycle of the machine.

A relay can assume but two stable states, energized and de-energized, corresponding to the normally open and normally closed positions of its contacts. Hence, the digits of the numerical quantities upon which the calculator operates are represented by a "coded decimal" number system. Perhaps the oldest examples of such number systems are the five and six "hole" codes used in printing telegraph equipment, and closely allied to the coding perforated in the machine's input and output paper tapes. Many systems have been employed for the representation of the ten digits by combinations of on-off devices. The system presently employed in the calculator uses four relays, the minimum possible number, to represent the decimal digits. The values 8, 4, 2, and 1 have been assigned to the four relays. Hence, each decimal digit is represented by its equivalent in the binary number system.

It is frequently necessary in a computation to normalize the quantities involved, multiplying by powers of ten in order to keep the values within the range of the computing device employed. In large-scale digital calculators, where many operations are performed between the input of data and the output of results, the problem of normalization is of the greatest importance. If due care is not exercised, intermediate results may become either too large or too small to be contained within the columns of digits provided by the machine. This problem is met in the present calculator as in the Bell Telephone Laboratories' relay computers, by storing quantities in the semi-logarithmic form [2,3]

$$x = \pm p \times 10^{i},$$

where

$$1 \leq p < 10 \quad \text{and} \quad -15 \leq i \leq +15.$$

Since all integral values of i in this range can be obtained in five binary columns, the exponent is stored in true binary form, using binary complements for negative exponents. Thus five relays representing the values 16, 8, 4, 2, and 1 are employed to code the exponent.

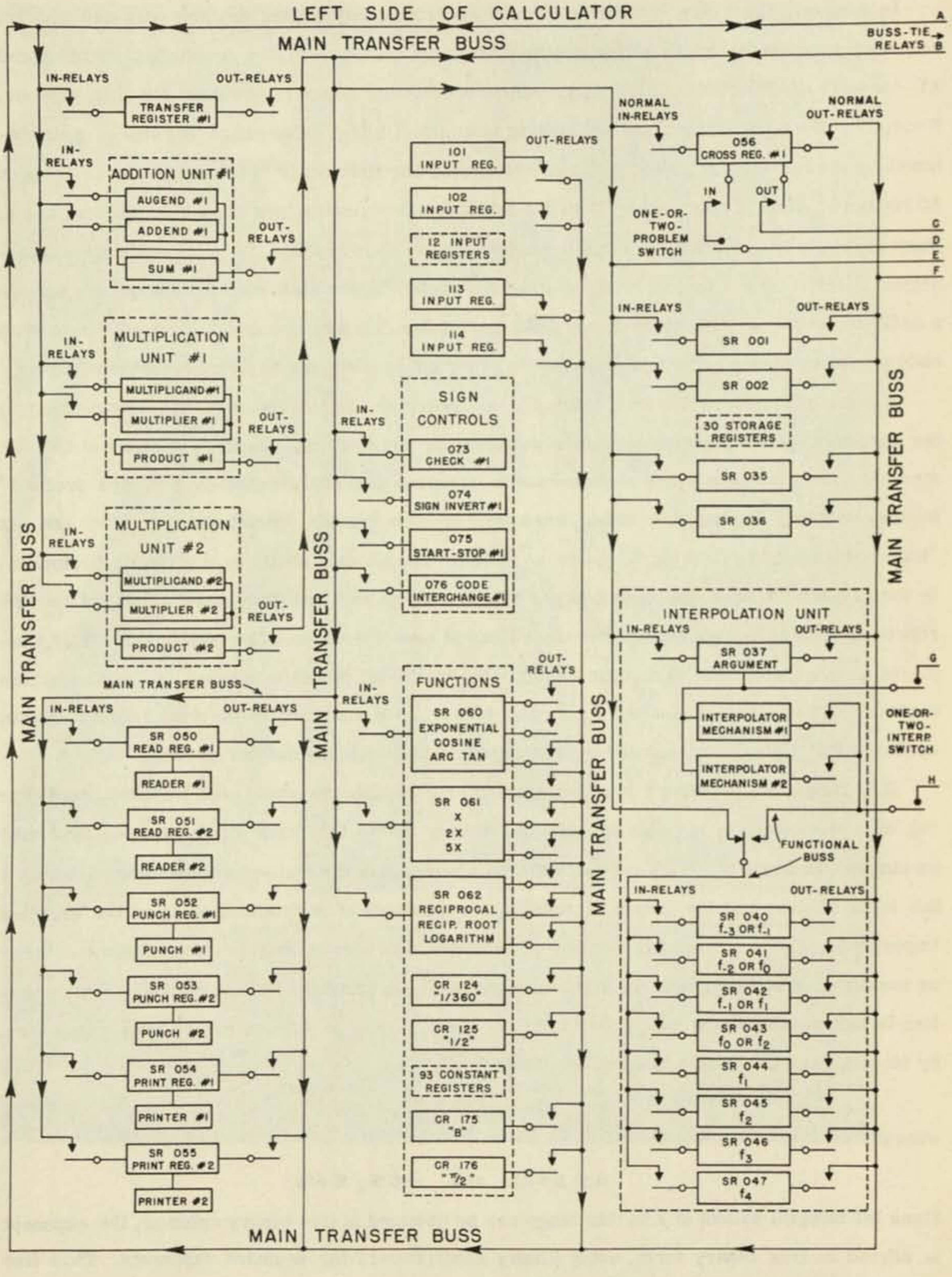

Fig. 1.1 - Organization of the calculator.

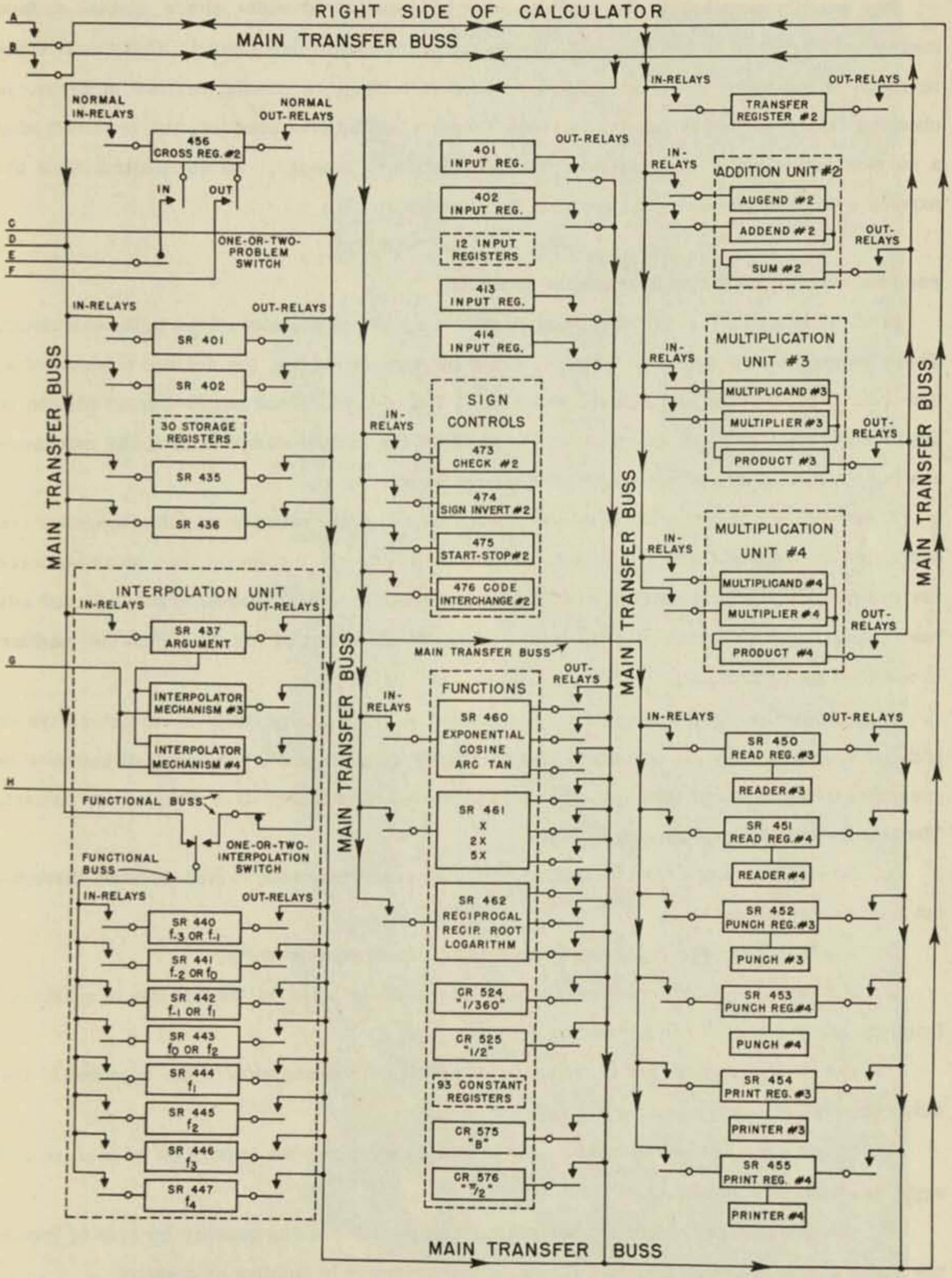

Fig. 1.1 continued - Organization of the calculator.

Any quantity standing in the machine may be transferred under either manual or tape control into a set of lights mounted near the top of the main control panel. This visual transcription of quantities in the calculator is used in testing, in tracing sources of error, in checking that preliminary values have been properly set into the machine, and in maintaining a current indication of the stages of the computation in process. As an illustration of the number system employed by the machine, the quantity,

$$\pi/2 = 1.5707\ 96327,$$

was transferred into the read-out lights, Plate XII.

In all, 46 relays are required to represent each numerical quantity stored in the calculator. These relays are allocated as follows: algebraic sign, one relay; ten decimal columns of ρ, four relays per column, 40 relays; exponent j, five relays. Since parallel transmission is used for the transfer of all quantities in the machine, the various components of the calculator are interconnected by a 46-wire number transfer buss.

Figure 1.1 is a diagram of the internal organization of the calculator. All components are duplicated on the right and left sides, so that, as previously mentioned, two machines each having one-half the total storage and sequencing capacity are available. The right and left busses are connected by the buss-tie relays (shown at top center of Fig. 1.1) when the machine is operated as a single unit.

Each component of the calculator is connected to the buss by either in- or out-relays or both as determined by the purpose of the particular unit. Figure 1.1 includes all components connected to the buss and each set of in- and out-relays is indicated by a single relay contact. These units provide the following facilities:

(1) twenty-four sets of dial switches for storing quantities which remain constant throughout a particular computation;

(2) ninety-six storage registers for recording intermediate results;

(3) two transfer registers providing the intermediate stage in the transfer of quantities from one storage register to another;

(4) two cross registers for transferring quantities from one side of the machine to the other when the buss-tie relays are open;

(5) circuits permitting the inversion of algebraic signs and the imposition of positive and negative absolute value signs;

(6) two "sign-invert" registers permitting multiplication of any quantity by plus or minus one according as the value read into the sign-invert register is positive or negative;

(7) four tape reading mechanisms for reading sequential numerical data into the calculator;

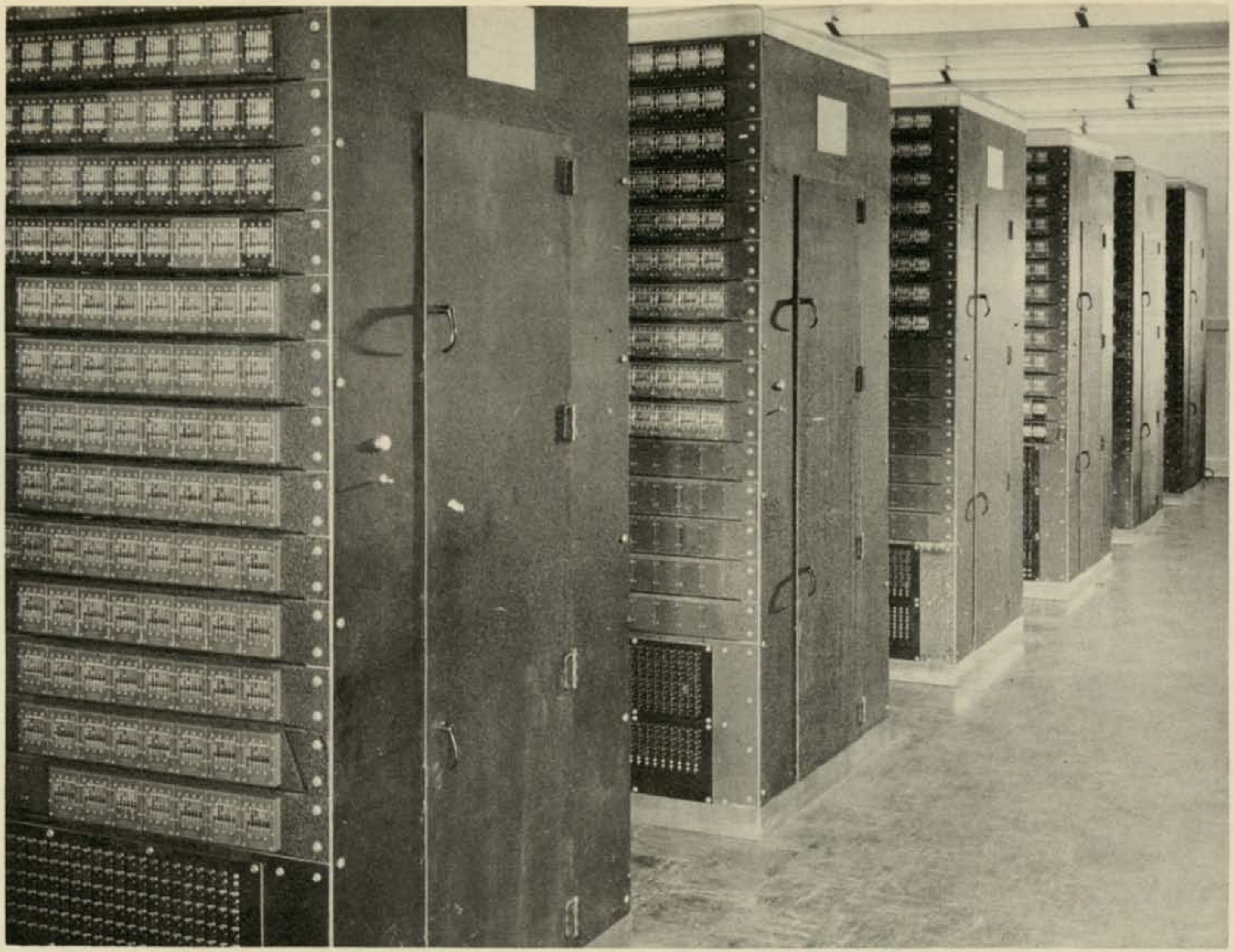

Plate VIII Relay Cubicles

Any quantity standing in the machine may be transferred under either manual or tape control into a set of lights mounted near the top of the main control panel. This visual transcription of quantities in the calculator is used in testing, in tracing sources of error, in checking that preliminary values have been properly set into the machine, and in maintaining a current indication of the stages of the computation in process. As an illustration of the number system employed by the machine, the quantity,

$$\pi/2 = 1.5707\ 96327,$$

was transferred into the read-out lights, Plate XII.

In all, 46 relays are required to represent each numerical quantity stored in the calculator. These relays are allocated as follows: algebraic sign, one relay; ten decimal columns of ρ, four relays per column, 40 relays; exponent j, five relays. Since parallel transmission is used for the transfer of all quantities in the machine, the various components of the calculator are interconnected by a 46-wire number transfer buss.

Figure 1.1 is a diagram of the internal organization of the calculator. All components are duplicated on the right and left sides, so that, as previously mentioned, two machines each having one-half the total storage and sequencing capacity are available. The right and left busses are connected by the buss-tie relays (shown at top center of Fig. 1.1) when the machine is operated as a single unit.

Each component of the calculator is connected to the buss by either in- or out-relays or both as determined by the purpose of the particular unit. Figure 1.1 includes all components connected to the buss and each set of in- and out-relays is indicated by a single relay contact. These units provide the following facilities:

(1) twenty-four sets of dial switches for storing quantities which remain constant throughout a particular computation;

(2) ninety-six storage registers for recording intermediate results;

(3) two transfer registers providing the intermediate stage in the transfer of quantities from one storage register to another;

(4) two cross registers for transferring quantities from one side of the machine to the other when the buss-tie relays are open;

(5) circuits permitting the inversion of algebraic signs and the imposition of positive and negative absolute value signs;

(6) two "sign-invert" registers permitting multiplication of any quantity by plus or minus one according as the value read into the sign-invert register is positive or negative;

(7) four tape reading mechanisms for reading sequential numerical data into the calculator;

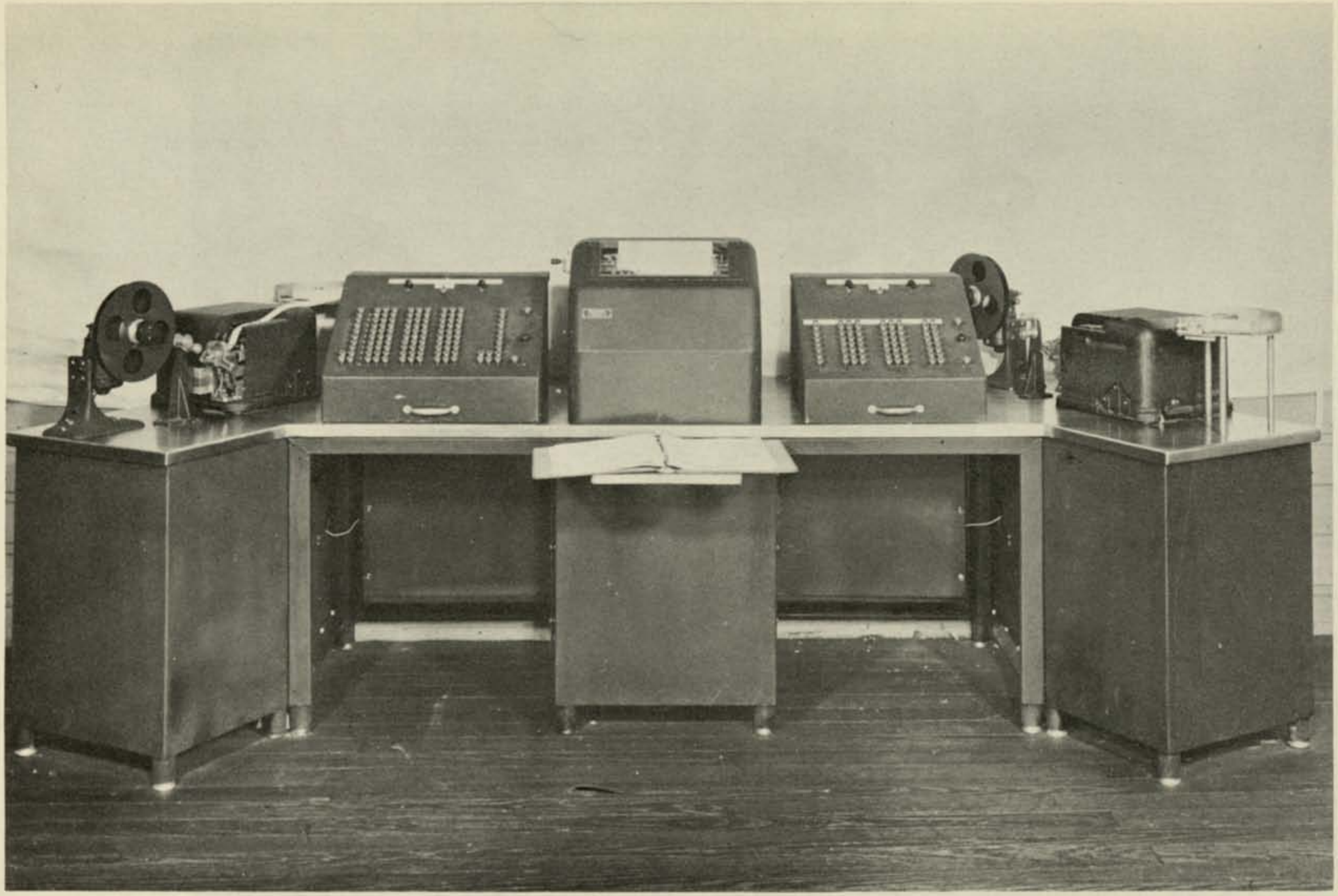

Plate VI Tape Preparation Table

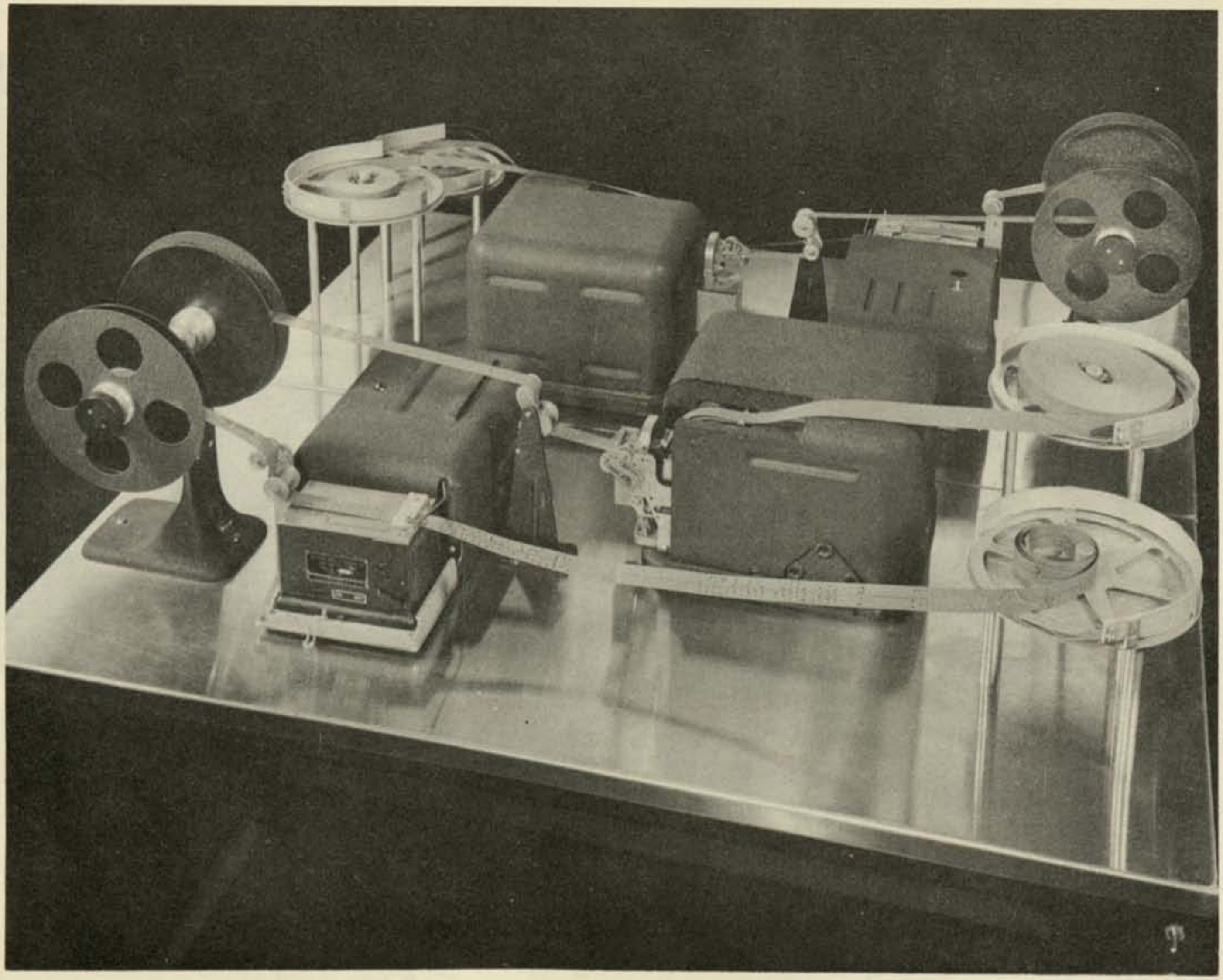

Plate VII Tape Reproduction Table

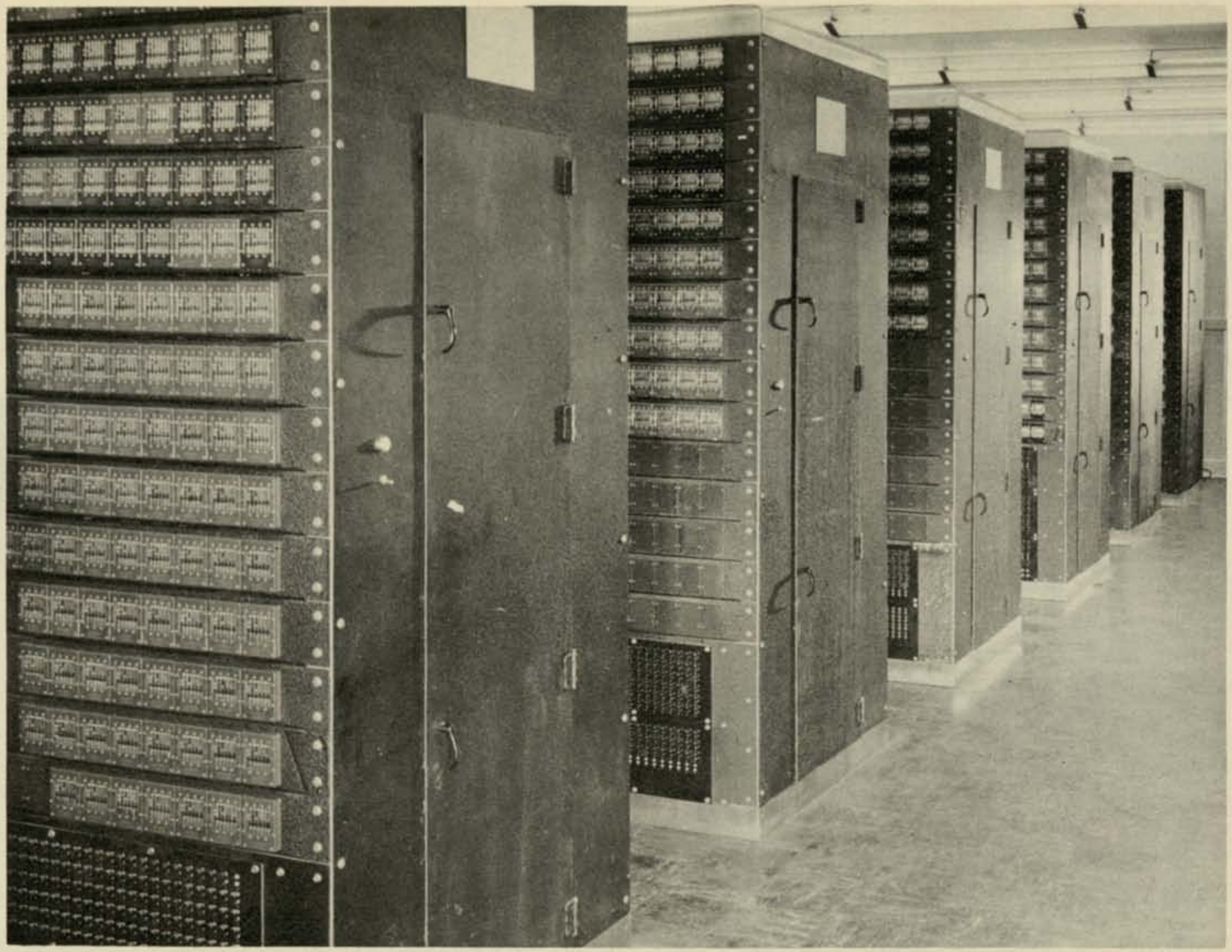

Plate VIII Relay Cubicles

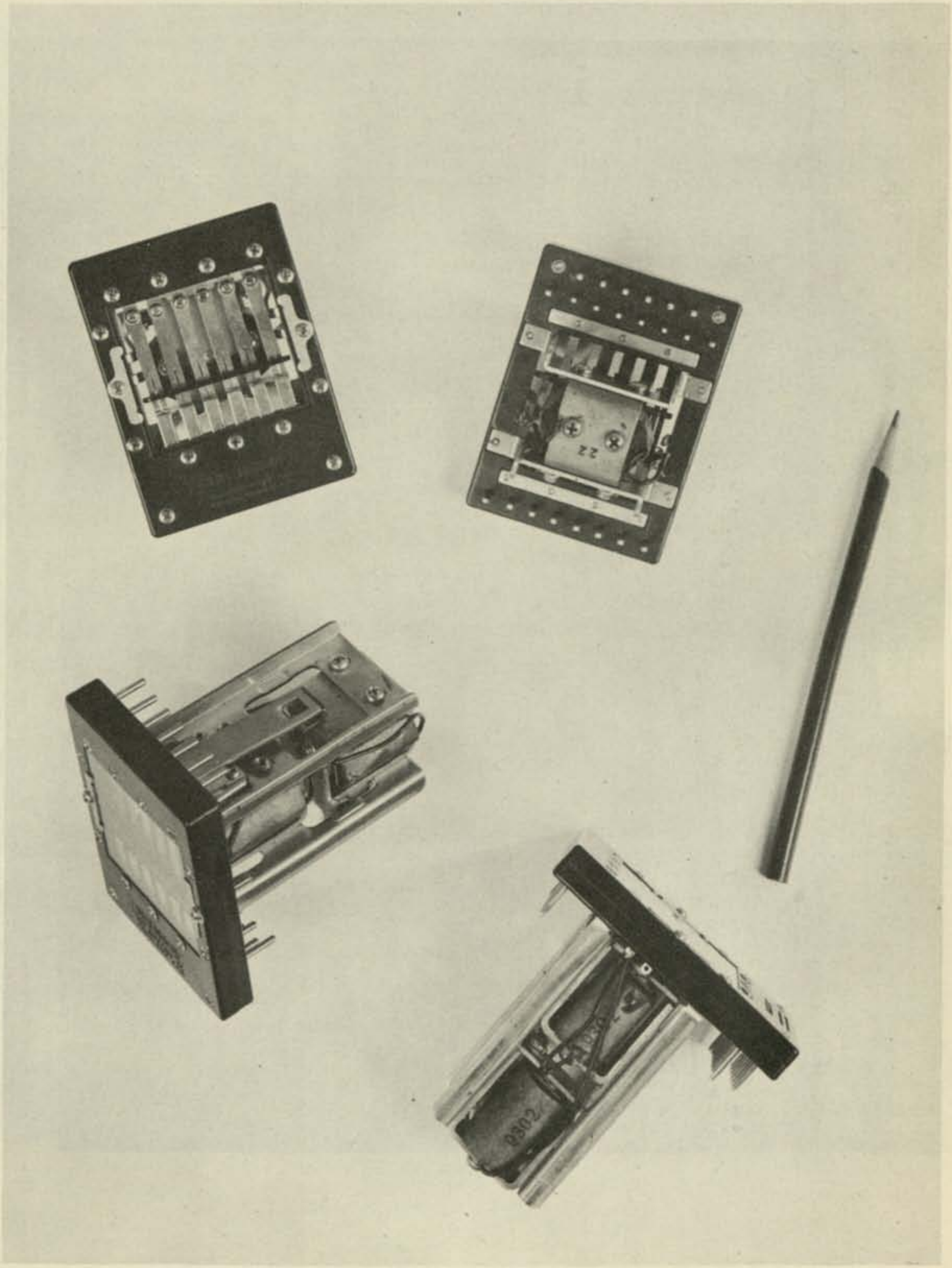

Plate IX Relays: latch type below

(8) two addition units for adding and subtracting;

(9) four multiplication units;

(10) two functional units each supplying

  (a) the reciprocal, making unnecessary the inclusion of a dividing unit,

  (b) the reciprocal square root,

  (c) the elementary transcendental functions, $\log_{10} x$, 10^x, and $\cos x$,

  (d) the inverse function $\arctan x$;

(11) four interpolator mechanisms for

  (a) positioning tapes containing coded tabular data under control of an argument register, and

  (b) reading sequences of tabular data for use in any selected interpolation procedure to obtain values of superior transcendental functions or empirical functions;

(12) two "code-interchange" registers for selecting the odd or even numbered storage registers, and therefore selecting the quantities contained for transfer, under control of the sign of the value read into the code-interchange register;

(13) two "start-stop" registers for conditionally starting and stopping the sequence mechanisms under control of the sign of the value read into the start-stop register, and therefore selecting the series of operations to be performed;

(14) two "check" registers for receiving the sign of any check quantity and stopping the calculator if the sign is negative;

(15) four tape punching mechanisms for recording computed results in a form suitable for re-entry into the calculator;

(16) four printers for recording computed results in a form suitable for publication;

(17) four sequence control mechanisms for automatically operating the machine.

The sequence mechanisms, Plate XIII, by means of sensing pins read perforated paper tapes containing coded instructions to the calculator. Each order consists of four parts, three of which are read from the control tape, and one of which is supplied automatically by the machine itself. These parts taken together specify a number transfer and the operation to be performed. The four parts of an order are:

(1) Sign: a statement of the change, if any, to be made in the algebraic sign of the quantity to be transferred;

(2) Out: the specification of the register whose out-relays are to be closed permitting egress to the buss of the quantity in the register;

PROBLEM______ TAPE______ SECOND______

LINE	FORMULA	SIGN	OUT	IN	OPER.
1	x from S.R.014 to Augend R.		014	AUGEND	
2	y from S.R.035 to Addend R.		035	ADDEND	
3	a from S.R.016 to Multiplicand R.		016	MULTIPLICAND 1	
4	b from S.R.005 to Multiplier R.		005	MULTIPLIER 1	
5	a from S.R.016 to Transfer R.		016	TRANSFER	
6	$x+y$ from Sum R. to S.R.021		SUM	021	
7	$-\|u\|$ from S.R.034 to Augend R.	3	034	AUGEND	
8	T from Sw.R.107 to Addend R.		107	ADDEND	
9				MULTIPLICAND 2	
10				MULTIPLIER 2	
11	a from Transfer R. to Sign-Invert R.		TRANSFER	074	
12	$T-\|u\|$ from Sum R. to Check R.		SUM	073	
13	z from S.R.041 to Transfer R.		041	TRANSFER	
14	z from Transfer R. to S.R.022		TRANSFER	022	
15	n from S.R.001 to Transfer R.		001	TRANSFER	
16	Print arg. n and space horizontally		TRANSFER	055	02
17	Transfer r from S.R.050 to S.R.047 and		050	TRANSFER	01
18	read s from tape to S.R.050		TRANSFER	047	
19	$x+y$ from S.R.021 to Augend R.		021	AUGEND	
20	$\frac{a}{\|a\|}z$ from S.R.022 to Addend R.	4	022	ADDEND	
21	y from S.R.035 to Transfer R.		035	TRANSFER	
22	y from Transfer R. to Punch R.; punch		TRANSFER	052	01
23	ab from Product R. to S.R.023		PRODUCT 1	023	
24	$x+y+\frac{a}{\|a\|}z$ from Sum R. to S.R.036		SUM	036	
25	p from S.R.013 to Augend R.		013	AUGEND	
26	$-q$ from S.R.012 to Addend R.	1	012	ADDEND	
27				TRANSFER	
28			TRANSFER		
29			PRODUCT 2		
30	$p-q$ from Sum R. to S.R.037		SUM	037	

Fig. 1.2 - Coding form.

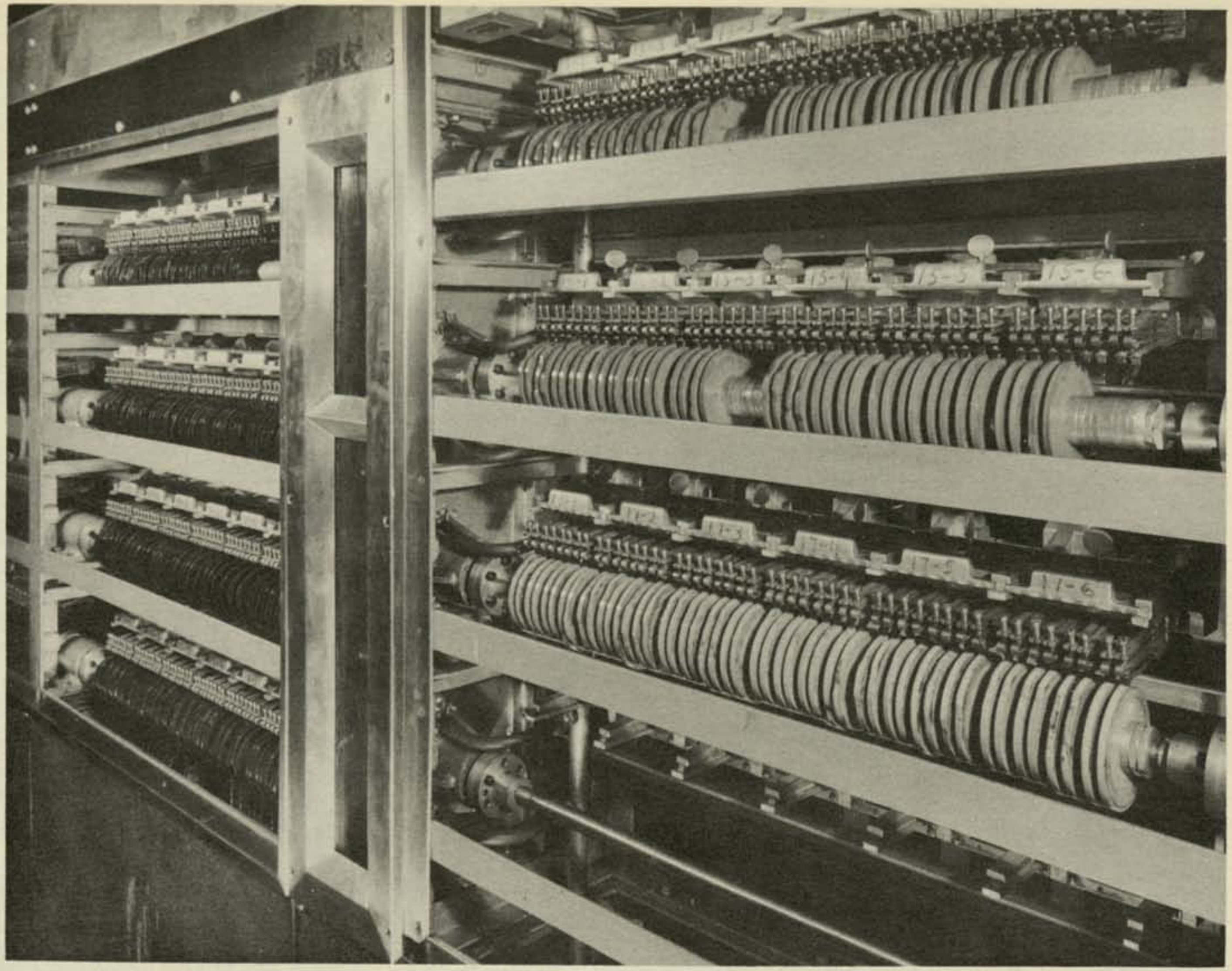

Plate X Cam Unit: details of cam-controlled contacts

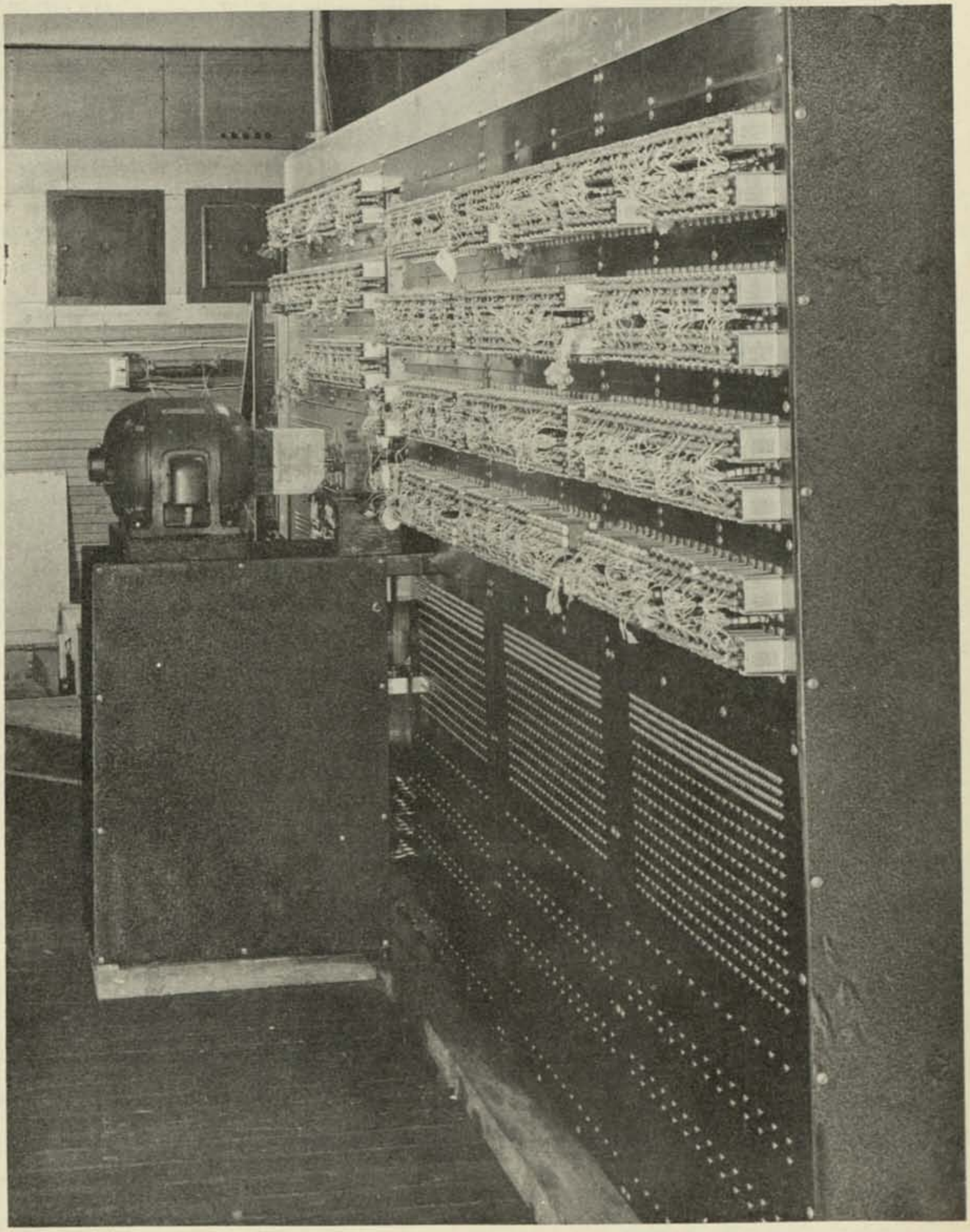

Plate XI Cam Unit: rear view showing arc suppression circuits and drive motor

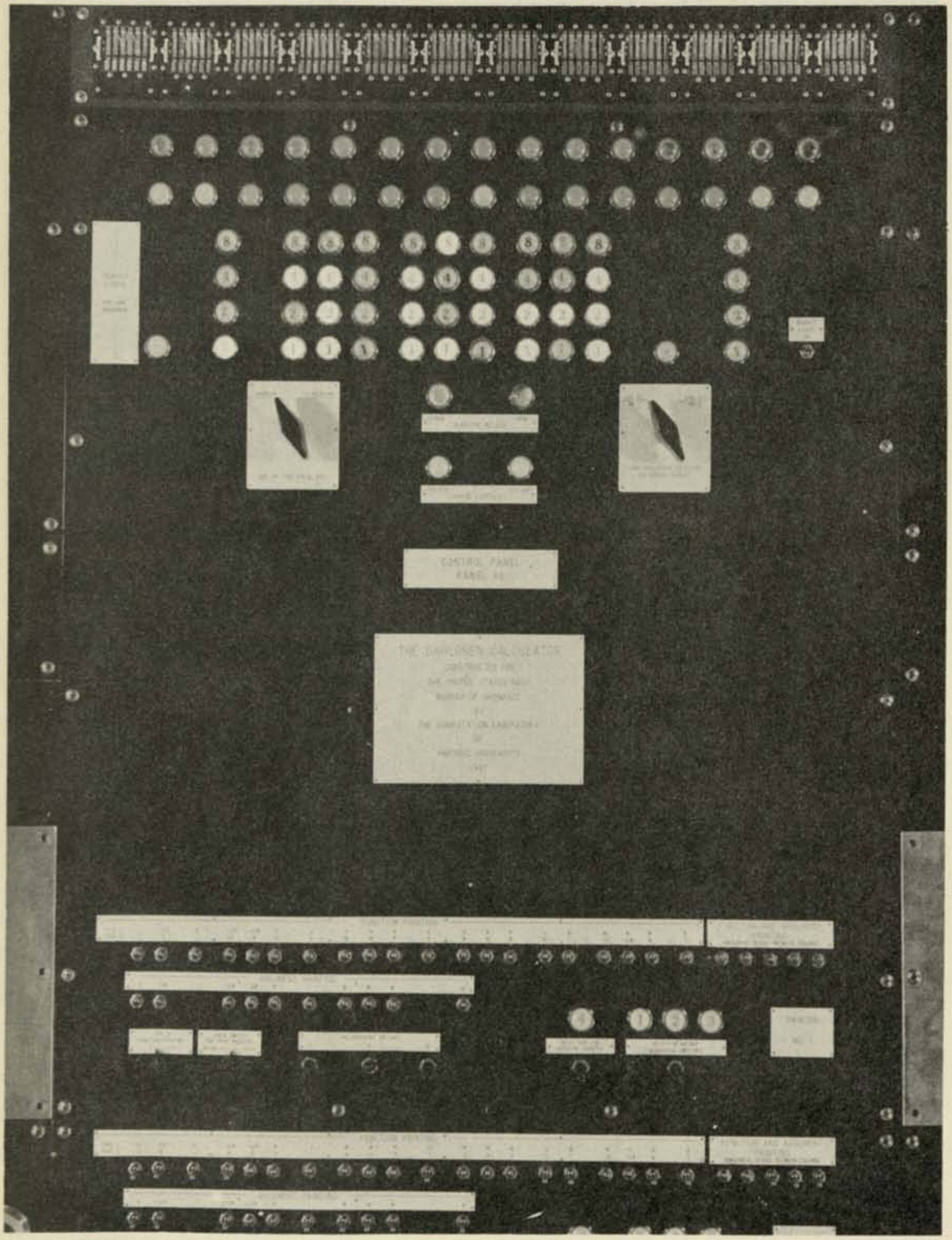

Plate XII Control Panel: detail showing read-out lights

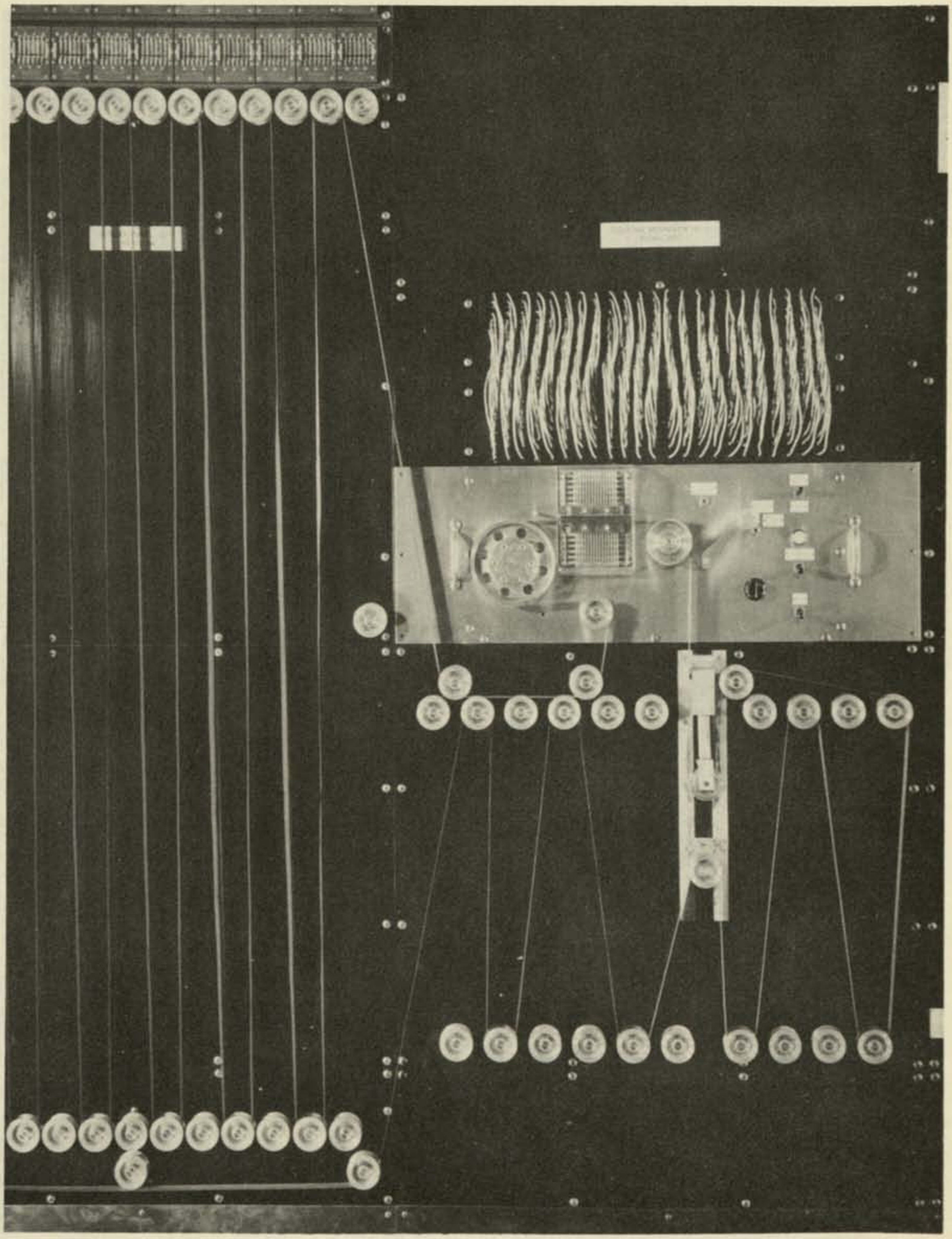

Plate XIII Sequence Mechanism and Roller Panel

(3) In: the specification of the register whose in-relays are to be closed permitting registration of the quantity entering from the buss;

(4) Operation: the definition of the operation to be initiated, if any.

Either (2) or (3), but not both, is determined by the internal controls and the fixed pattern of impulses supplied by the cam unit.

Each order requires two impulse times. During the first, the in-register is reset if necessary, the out- and in-relays completing the transfer circuit through the buss are closed, and the circuits required for the initiation of the mathematical operation are established. During the second impulse time, the quantity to be transferred is delivered through the buss.

Figure 1.2 shows the type of coding form used by the mathematician in preparing tapes for a sequence mechanism. Each sheet includes 30 operating instructions, requiring 60 impulses, and covering one second of time. That part of each instruction or line of coding determined by the internal controls of the machine is already filled in on the coding sheet. The code numbers of the registers, many of which are shown in Fig. 1.1, consist of three digits. Lines 13 and 14 of Fig. 1.2 show the coding required to transfer a quantity, z, from storage register (041) to storage register (022). On line 1, a quantity, x, from storage register (014) is transferred into the augend register of the addition unit, and on line 2, a second quantity, y, from storage register (035) into the addend register. On line 6, the addition having been completed within the unit, the sum, $x + y$, must be transferred from the sum register to storage. In this case, the sum is delivered to storage register (021). Note that four additions are possible in each cycle, lines (7, 8, 12), (19, 20, 24), and (25, 26, 30) being repetitions of the lines (1, 2, 6) required for the coding of an addition.

Spaces for the three orders controlling the multiplication unit—read-in of the multiplicand and multiplier from storage and read-out of the product to storage—appear on lines (3, 4, 23) and (9, 10, 29). Thus two products may be formed during each second of operation under control of a single sequence mechanism. The remaining 12 lines of coding in each cycle provide the time required to make six number transfers from one storage register to another using the transfer register as an intermediary. No operation codes are required for such number transfers or for the initiation of addition or multiplication. If it is not desired to perform an operation at the time at which it is scheduled, the corresponding lines of coding are left blank. However, since such practice is wasteful of machine time, it is to be avoided whenever possible.

In this connection, it should be noted that each second of machine time provides for two multiplications, four additions, and six number transfers. These relative frequencies of the elementary operations were allocated on the basis of experience with the widely differing computational routines, which had been required of the Automatic Sequence Controlled Calculator[4,5] during its previous two years of continuous operation. Six months' operation of the present calculator has borne out the accuracy of the estimates. The coding of such diverse problems as the inversion of matrices of high order, and the solution of systems of simultaneous non-linear ordinary differential equations, has been found to keep the addition and multiplication units in operation for a large part of the running time. Further, the six number transfers per cycle seem to provide adequately not only for the substitutions required in the computation but also for input, output, and check procedures.

Thus, when a problem is coded for maximum efficiency approximately two multiplications, four additions, and six number transfers should be performed in each second, on each side of the calculator. Before the coding is started, a rough estimate of the time required for the solution of any problem (by one-half of the calculator) may be obtained by counting the number of multiplications to be performed and assuming that each requires one-half a second. In general, this estimate is more accurate than estimates based on the speed of the individual components. Hence the basic times given in the following tabulation must be considered as primarily pertinent to the individual machine units themselves and not to the over-all speed of the calculator. Included in these intervals is the time required for the withdrawal of the arguments from storage and the delivery of completed results.

Operation	Seconds
Addition	0.2
Multiplication	0.7
Reading Tape	1.5
Positioning Interpolator and Reading Values from Tape	8.0
Division	4.7
Reciprocal Square Root	6.0
$\log_{10} x$	5.2
10^x	6.7
$\cos x$	7.5
$\arctan x$	9.5
Punching Tape	1.5
Printing	4.0

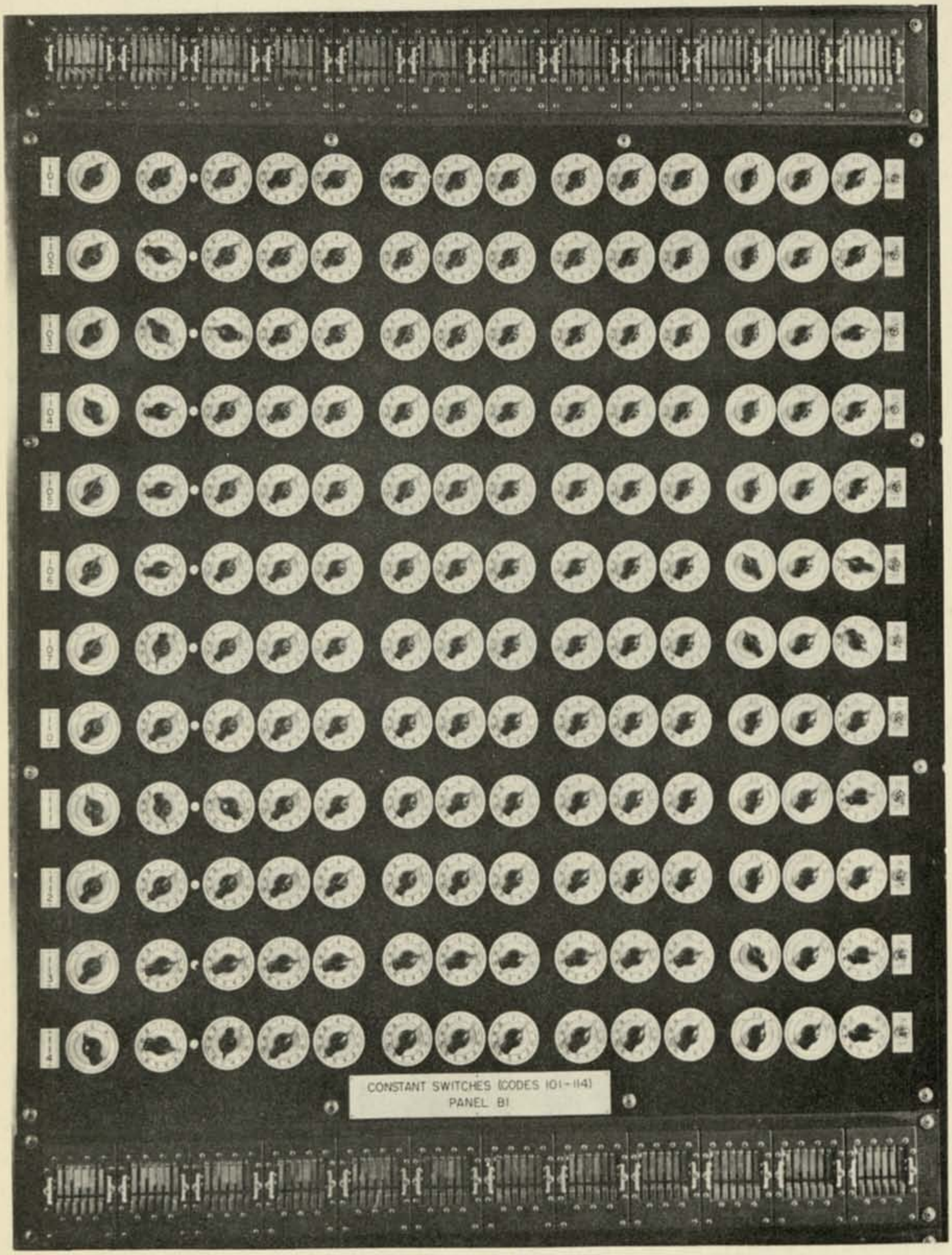

Plate XIV Switches: left side of calculator

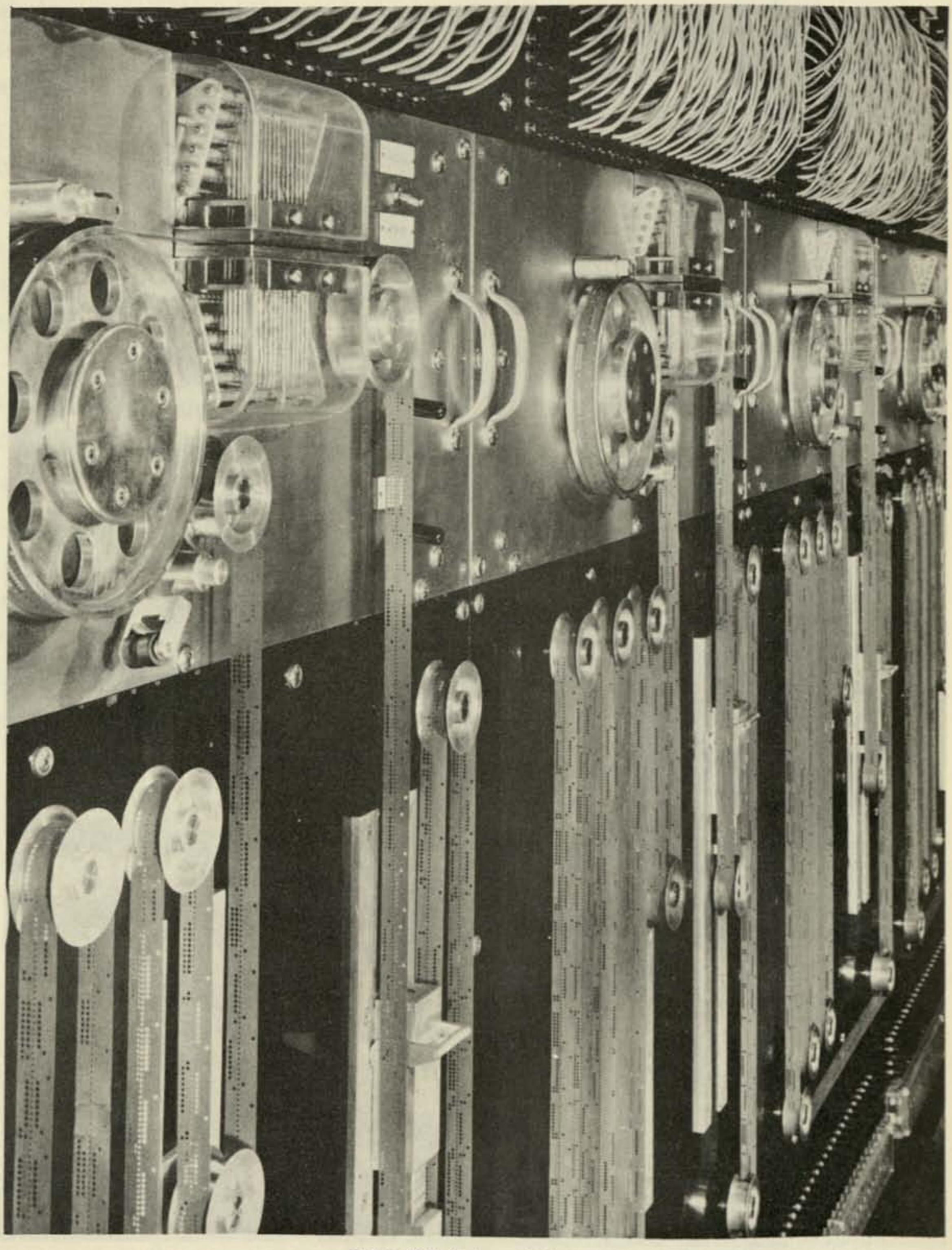

Plate XV Interpolators

Returning now to Fig. 1.1, twenty-four sets of dial switches, twelve on each side of the calculator, Plate XIV, store constants such as increments of the independent variables, check tolerances, and other parameters. These registers are equipped with out-relays connecting them to the buss (Fig. 1.1, upper center of each side) through which the stored values may be read via the buss to a transfer register, an addition unit, or a multiplication unit. They are frequently used under manual control to read starting values into the storage registers of the machine and to read in values required in testing.

For the recording of intermediate results, there are 48 storage registers on each side of the machine. Each is supplied with in- and out-relays connecting to the buss. Quantities may be transferred out of a storage register only to a transfer register, an addition unit, or a multiplication unit and into a storage register only from the same three sources. The latch relays composing the storage registers are reset automatically by an impulse occurring at the same time as the impulse closing the in-relays and under the same code control. Thus no coding is required to clear such a register.

The algebraic sign of quantities transferred through the buss (with the exception of certain constants wired into the calculator which will be described later) can be altered by means of codes placed in the sign column of the line of coding directing the transfer, Fig. 1.2. These codes consist of but a single digit, and permit the quantity x, positive or negative, to be read into the buss as follows:

Code	0	1	2	3	4
Sign	$+x$	$-x$	$+\|x\|$	$-\|x\|$	$+\frac{a}{\|a\|}x$,

where in the last case the control quantity a is stored in the sign-invert register. The use of these sign-codes is illustrated by line 7 of Fig. 1.2, where code 3 is used in order that the negative absolute value of a quantity u standing in storage register (034) may be transferred to the augend register.

Shown at the upper right and left of Fig. 1.1 are the transfer registers, which provide for the transfer of quantities from one storage register to another. These registers and the normal storage registers are identical in construction except that their in-relays are automatically picked up at fixed times during each cycle (lines 5, 13, 15, 17, 21, 27 of Fig. 1.2) provided that an out-code is entered on the corresponding line of coding. Quantities may be read into or out of one transfer register from any unit except the other transfer register, an addition unit, or a multiplication unit. The out-relays of the transfer registers, like the in-relays, are picked up at fixed times (lines 11, 14, 16, 18, 22, 28 of Fig. 1.2) provided that an in-code is entered on the corresponding line of coding.

A cross register (Fig. 1.1, top center) is provided on each side of the calculator. If two different problems are being run on the machine simultaneously, or if only one problem is being run and the entire machine is under the control of but one sequence mechanism, the cross registers function as normal storage registers. If, however, one problem is being run, and the calculation is under the control of two sequence mechanisms operating simultaneously, the buss-tie relays are open and the one-or-two-problem switch is in the two-problem position. Then the cross registers must be used to transfer quantities from one side of the machine to the other. As may be seen in Fig. 1.1, these registers are each equipped with two sets of in- and out-relays connecting to the right and left busses. A secondary function of the cross registers is that quantities to be displayed in the read-out lights on the main control panel are read into one of them, previously selected by a switch, to control the lights.

There are two addition units, one on each side of the calculator. An adding operation is started when an augend and an addend are successively read into a pair of special registers associated with each of the addition units. These transfers take place at the times specified in the coding form. The in-relays of the augend and addend registers and other relays required for the initiation of addition are energized if, and only if, an out-code is read on the first line of addition coding. Because of the number system used in the calculator, the process of addition requires several steps. First, the exponents of the two terms are subtracted, and the digits of the quantity having the smaller exponent are shifted to the right in order that the decimal digits of the two terms shall appear in their proper relative columnar positions. The addition is then performed and the result read into the sum register. As the sum is read out to the buss, it is shifted left or right, so that the highest order non-zero digit stands in the tenth machine column, while the larger of the original exponents is corrected for this shift. Within the addition unit negative quantities are treated as complements on nine, thus providing for subtraction. Lines (25, 26, 30) of Fig. 1.2 require that the addition unit form the sum of p plus $-q$, or $p-q$, where $-q$ is delivered to the addend register because of the invert code, 1, on line 26 of the coding form. Clearly, subtraction is treated by the calculator as a special case of addition.

Four multiplication units, two on each side, receive the multiplicand and multiplier in special registers through in-relays. As in the case of addition, these in-relays are energized if, and only if, an out-code is read on the first line of multiplication coding. Within the unit, five multiples of the multiplicand are obtained; $1 \times (MC)$, $2 \times (MC)$, $4 \times (MC)$, and $5 \times (MC)$ are formed by static circuits, while $3 \times (MC)$ is built up by addition. Each digit of the multiplier, working from right to left, selects the proper multiple of the multiplicand. This multiple,

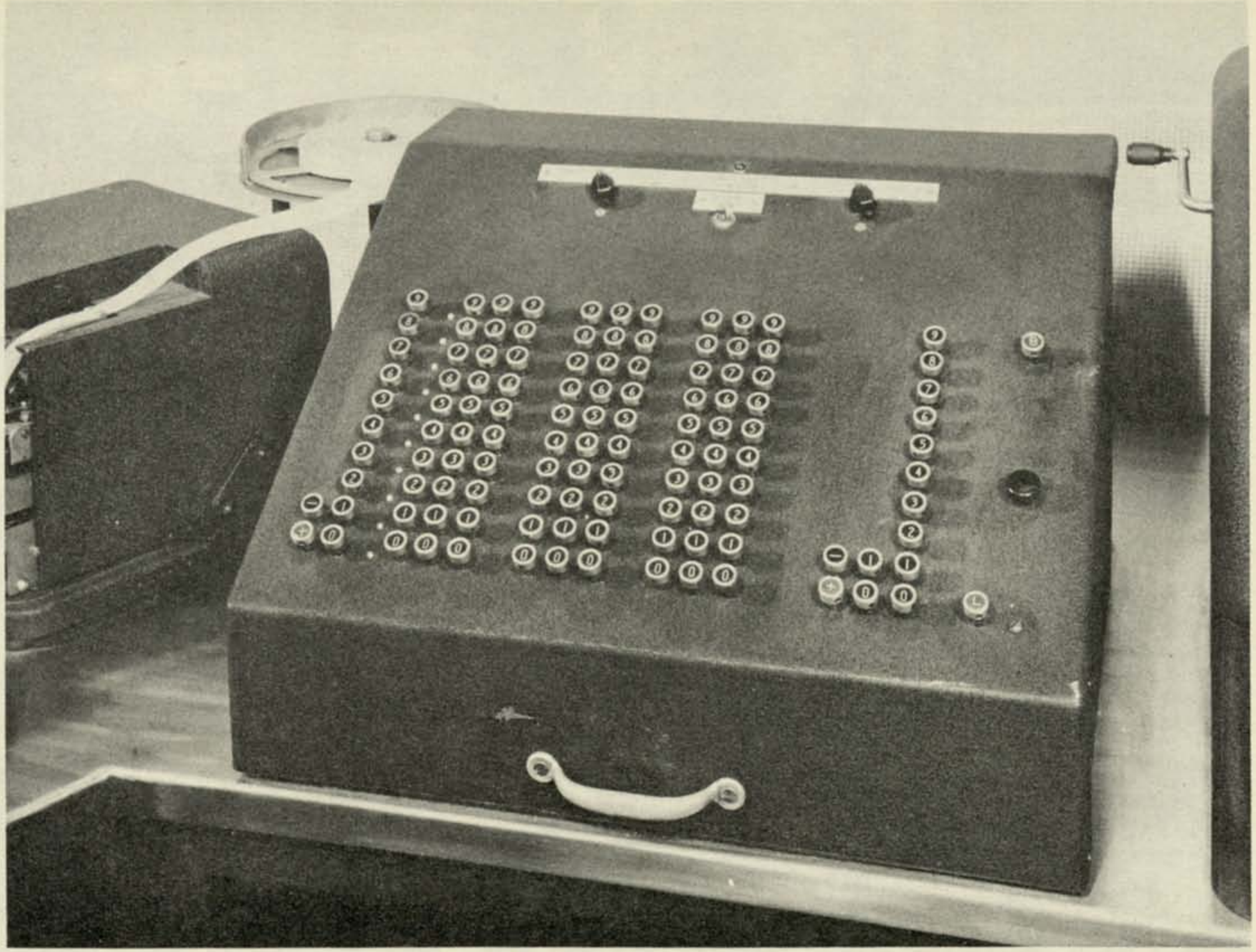

Plate XVI Functional Tape Preparation Unit

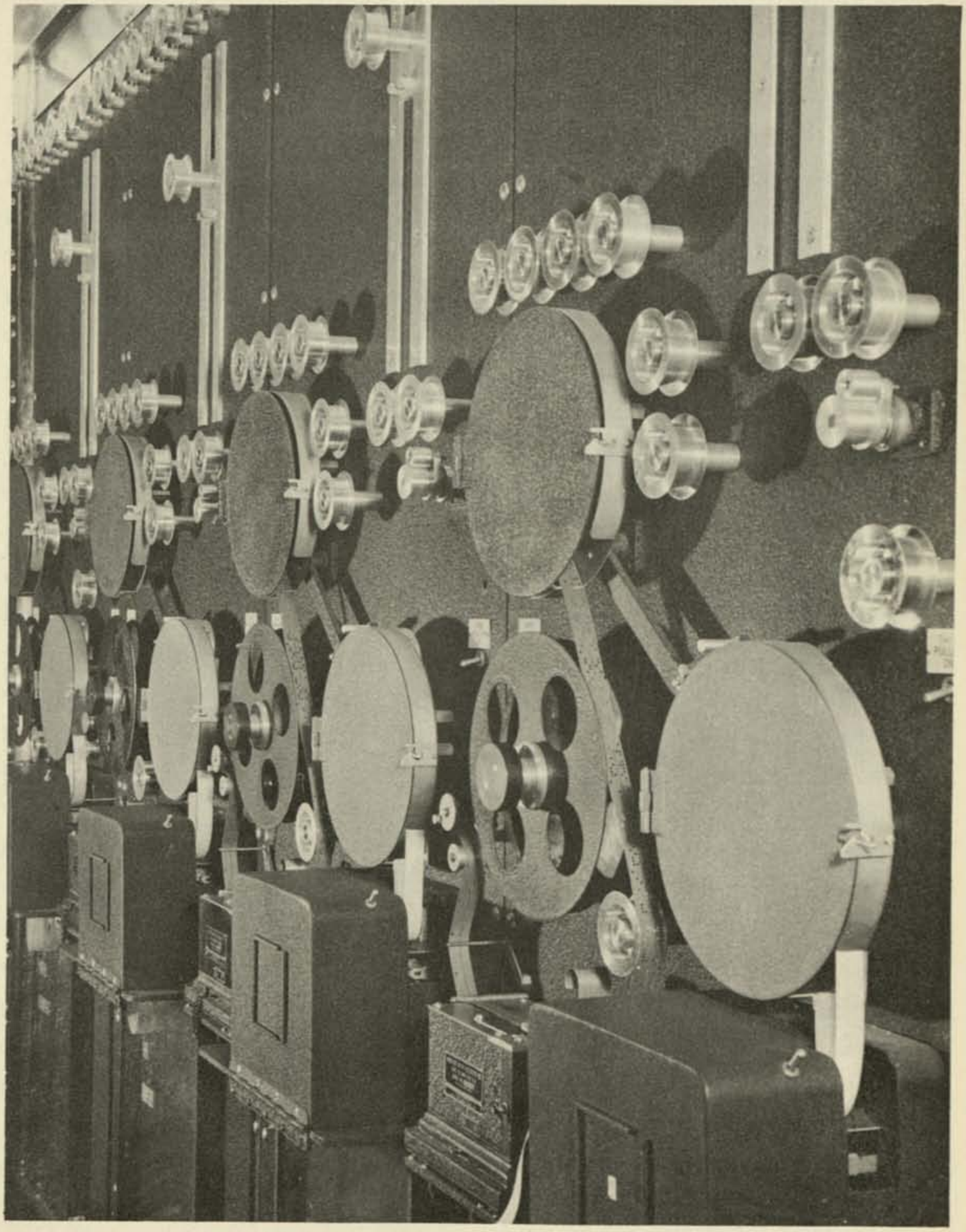

Plate XVII Tape Reading and Tape Punching Mechanisms after suitable shifting operations, is added to or subtracted from the partial sum already formed. The use of subtraction within the unit makes unnecessary the formation of the six, seven, eight, and nine multiples; they are replaced by subtraction of the appropriate lower multiple, and by increase of the next higher order digit of the multiplier by one. As in the addition unit, the subtraction is carried out by means of complements on nine. When the product is read out of the product register to the buss, it is shifted if necessary, and the sum of the exponents of the two factors is suitably corrected to give the exponent of the product. A multiplication is coded on lines (3, 4, 23) of Fig. 1.2.

From the foregoing description of the adding and multiplying components, it will be seen that by representing semi-logarithmically the quantities with which these units must deal, it has been possible to simplify the design of the multiplication units, at the cost of increasing the complexity of the addition units. However, this relative increase in the complexity of the addition units implies that the time required for addition is lengthened relative to that required for multiplication. Thus the operate times of the two units are made more consistent with the estimated relative frequency of the two operations.

Again referring to Fig. 1.1, it may be seen that a functional unit is provided on each side of the calculator for evaluating the elementary functions,

$$f(x) = 1/x,\ 1/\sqrt{x},\ \log_{10} x,\ 10^x,\ \cos x,\ \operatorname{arc\,tan} x.$$

Each unit consists of the following primary components;

(1) three normal storage registers equipped with a variety of special sensing circuits, and

(2) ninety-three permanently wired constant registers equipped with out-relays only.

The sensing circuits are designed to supply such quantities as first approximations to the reciprocal and to the reciprocal square root, multiplicative factors intended to reduce the range of the independent variable, and either two or five times the quantity standing in the registers associated with the sensing circuits themselves. The constant registers deliver to the buss such quantities as are necessary to the evaluation of the elementary functions; for example, $1/360$, $1/2\pi$, and the coefficients of power series.

The computing routines necessary to the evaluation of $f(x)$ include additions, subtractions, multiplications, and sensing operations only. The order in which the steps of the calculation are performed is dictated by the sequence control tape. Chapter VII will be given over to a detailed investigation of the functional units, of their operation, and of their coding. Only the computation of the reciprocal will be outlined briefly here.

The first step in the evaluation of the reciprocal $y = 1/x$ is the transfer of the argument, x, to one of the storage registers composing the functional unit. With the aid of the associated sensing circuits, a quantity, y_0, a first approximation to y, is selected. The sequence control tape then dictates the computation of the quantity,

$$y_1 = y_0(1-e)(1+e^2+e^4),$$

where

$$e = xy_0 - 1.$$

It may be shown that the quantity, y_1, will differ from x^{-1} by less than eight units in the lowest order machine column.

When a function, $f(x)$, is of such a nature that its values cannot be constructed with the aid of the aforementioned elementary functions together with other algebraic operations, then $f(x)$ must be supplied to the calculator, tabulated with equidistant arguments, and coded in perforated paper tapes. The four mechanisms, called interpolators, by means of which the machine reads the perforated paper tapes, are shown in Plate XV. Figure 1.3 shows the coding of numerical quantities in the tape. The tape is five holes wide, with a set of smaller sprocket holes running between the second and third columns, counting from right to left. Each quantity is represented by 13 lines of holes. The first line contains a hole in the fifth column, called the index; this marks the beginning of a coded quantity. The index insures that, when inserted in the interpolator mechanism, the tape is properly positioned under the reading pins. In the second line, only two hole positions are used; a hole in the second column indicates that the quantity is negative, and a hole in the first column indicates that the exponent is negative. The remaining eleven lines represent the exponent of the quantity followed by its ten decimal digits. The holes in the fourth, third, second, and first columns correspond to the 8, 4, 2, and 1 relays of the storage registers, respectively.

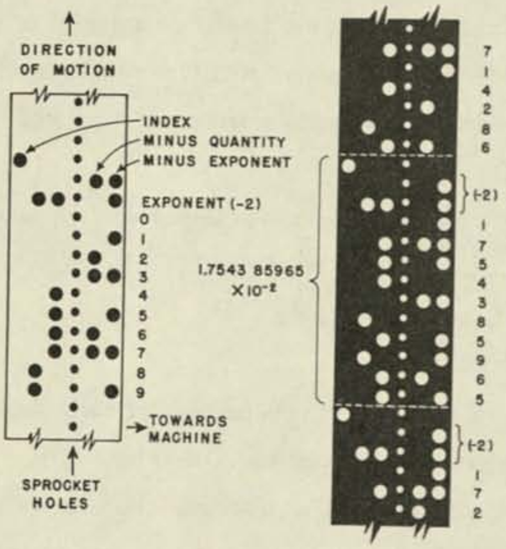

Fig. 1.3 - Functional tape.

The interpolator mechanisms are equipped with forward and reverse drives. The forward drive is used to position the functional tape under control of an argument register, while the reverse drive furnishes the slower intermittent motion necessary to read information from the tape into the machine.

The argument register (037) has special controls permitting it to position all four inter-

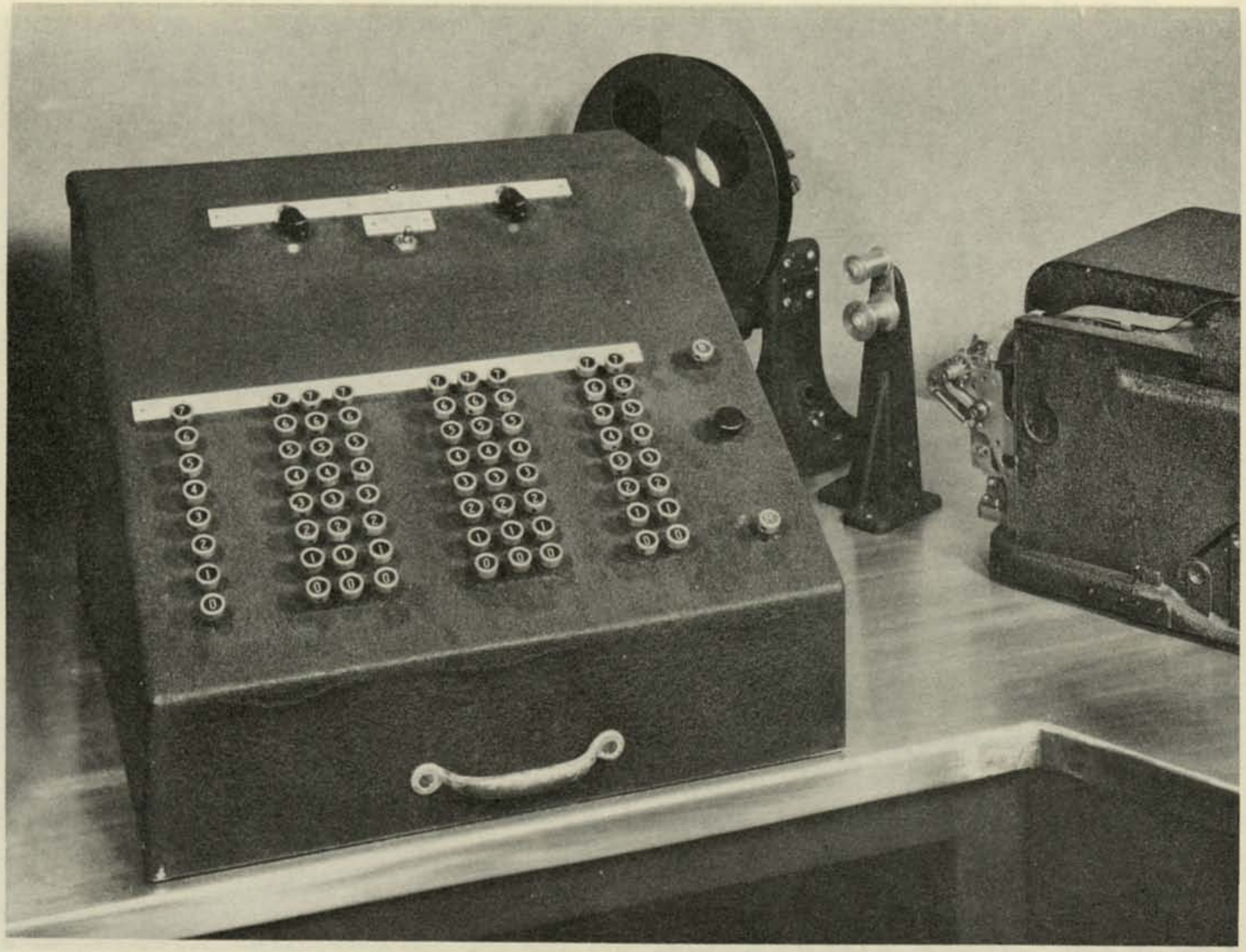

Plate XVIII Control Tape Preparation Unit

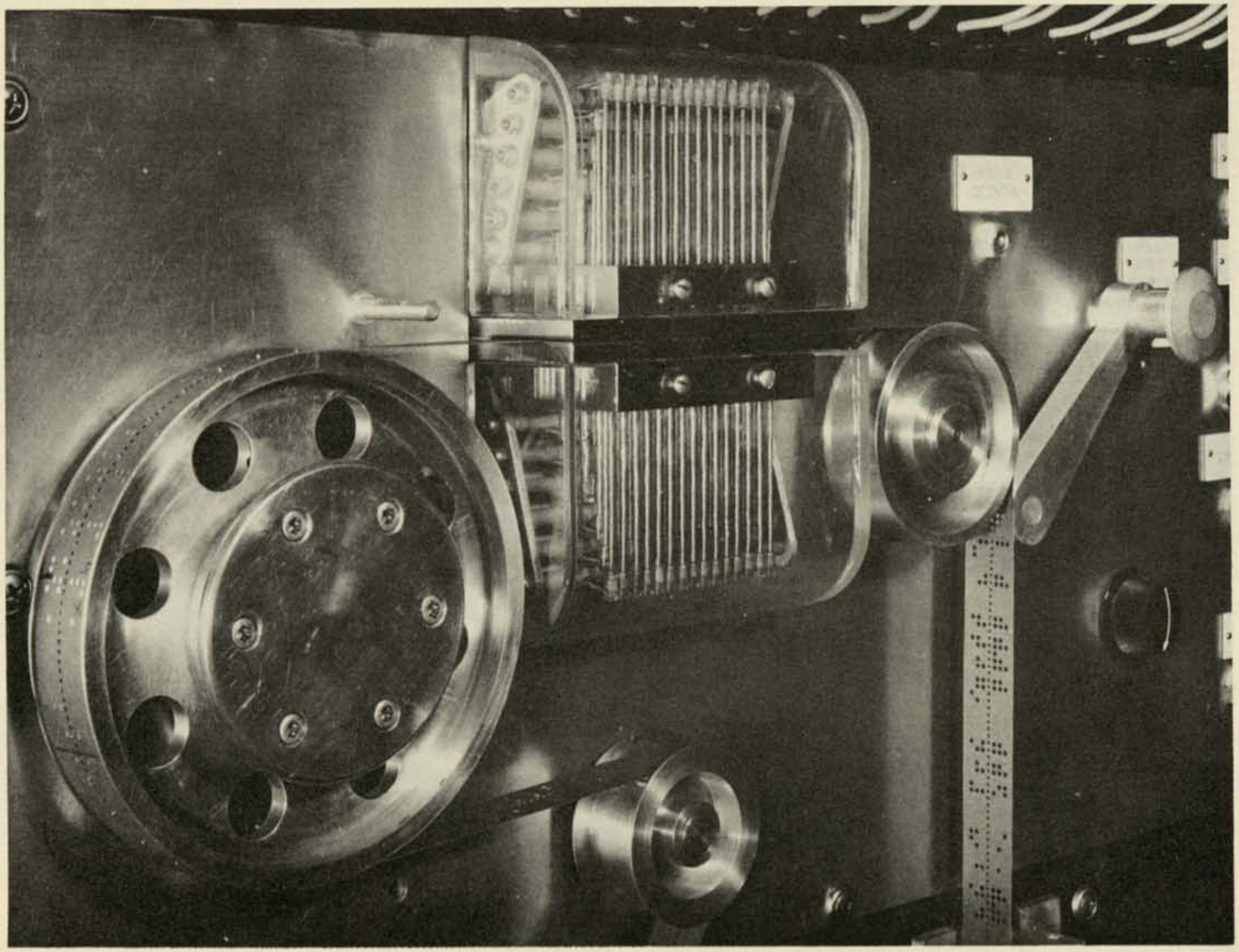

Plate XIX Sequence Mechanism: detail showing sensing pins and control tape polators when the "one-or-two-interpolation switch" is in the position opposite to that shown in Fig. 1.1. In this event, a capacity of 800 tabular values is available. When the one-or-two-interpolation switch is in the two-interpolation position, the argument register (037) can control interpolators No. 1 and No. 2 only, while argument register (437) can control interpolators No. 3 and No. 4. Thus two functional units each containing 400 tabular values can be dealt with at the same time. The disposal of the interpolator mechanisms as regards the right and left sides of the calculator, and the position of the one-or-two-problem switch is best made clear by means of the following tabulation.

One-or-Two-Interpolation Switch	One-or-Two-Problem Switch	
	One-Problem Position	Two-Problem Position
One-Interpolation Position	Scan 800 tabular values under control of register (037)	Scan 800 tabular values under control of register (037); available to left side only
Two-Interpolation Position	Scan 400 tabular values under control of register (037), and scan 400 tabular values under control of register (437)	Scan 400 tabular values under control of register (037) on the left side; scan 400 tabular values under control of register (437) on the right side

Although the interpolator mechanisms must be operated as one or two units dependent on the positions of the governing switches, they are not limited to one or two functions. Three or more functions may be supplied to the machine at the same time if the ranges of the independent variables permit. In this event, the arguments of the functions must be subjected to a linear transformation for selection purposes.

Other switches on the interpolator panels determine whether the interpolators will read four or eight successive values of the tabulated functions, providing the data necessary to third or seventh order interpolation as may be desired. In either event, all quantities read from functional tapes to the machine are transmitted over a functional buss, Fig. 1.1, to special storage registers. Hence the use of the interpolators does not interfere with the number transfer buss of the machine and the operations scheduled in the coding form. Once the selected tabular values have been recorded in the special storage registers, any interpolational procedure desired may be directed by the sequence control. Chapter VIII will deal with the construction and operation of the interpolators as well as with the codes controlling them.

Two means are available for preparing the functional tapes required for the operation of the interpolators. First, when the tabular values of $f(x)$ have been previously published, they may be copied on the keys of the functional tape preparation unit, Plate XVI, and the tape produced by the punches associated with this unit, under manual control. Second, a suitable control tape may be coded directing the calculator to compute the values of $f(x)$ and record them by means of one of the four output punches, mounted on the right wing of the machine, Plate XVII. These punches are employed to record all data which is to be refed into the calculator, either via the interpolators, or via the tape readers mounted beside the punches. The punch and feed units not only supply the machine with a large auxiliary static storage, but also may be employed to extend the internal storage capacity, since quantities may be stored in a bight in the tape between the punch and the feed, and automatically read back into the calculator without manual intervention.

Certain storage registers (Fig. 1.1, lower right and left) having special in- and out-circuits serve as intermediaries in the transmission of quantities from the tape readers and to the tape punches. The transfer of quantities between these special storage registers and the number transfer buss is accomplished in the usual manner. The input and output mechanisms themselves are under the control of operation-codes. These codes consist of two digits, and are entered in the fourth column of the coding form, Fig. 1.2. Lines 21 and 22 of this figure give the coding required to transfer a quantity to punch register No. 1 (052), and punch it in a tape. A quantity is transferred out of read register No. 1 (050) on line 17, and the order is given to read the next value from a tape on the first reading mechanism. This second quantity will be delivered automatically to register (050) during the next succeeding one and one-half seconds without further instruction. When the operation-codes are not used, the input and output registers function as normal storage registers.

Results which are to be printed are routed to registers (054) or (055) on the left side of the machine, or to (454) or (455) on the right, and thence through out-circuits to one of the four printers. These, like the tape readers and punches, are standard printing telegraph equipment, which have been adapted to the calculator by the Staff of the Computation Laboratory with the aid of the engineers of the Western Union Telegraph Company. Quantities are transferred to the print-input registers in the semi-logarithmic notation employed throughout the calculator. However, as determined by sets of switches on the main control panel, the print circuits deliver the quantities to the printers semi-logarithmically, or transform them to the ordinary notation. Thus, printed results may appear in either of the following forms:

3.249 877 081 (2)	324.987 7081
-1.439 353 842 (-4)	-0.000 143 935.

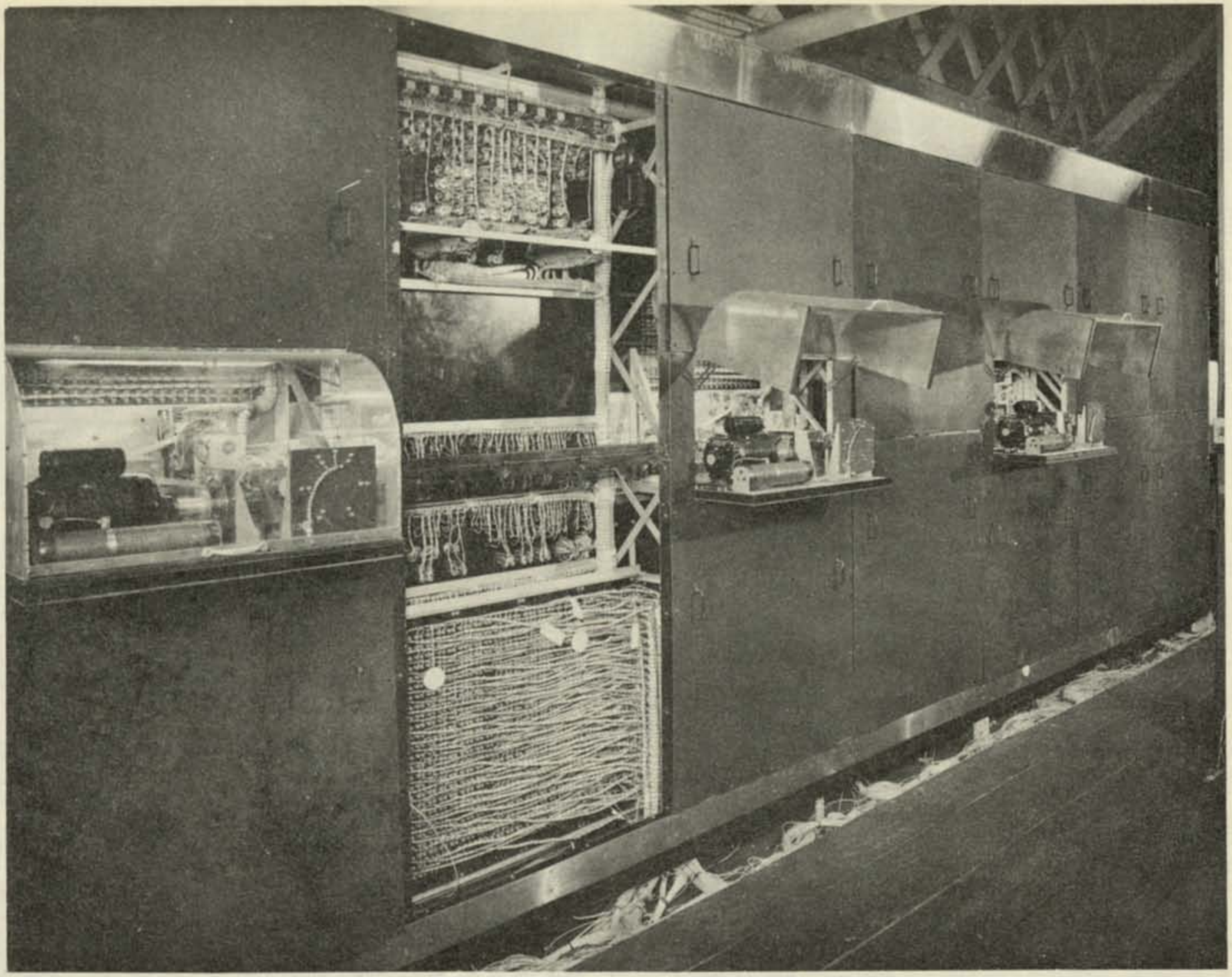

Plate XX Main Control Board: rear view showing sequence mechanisms

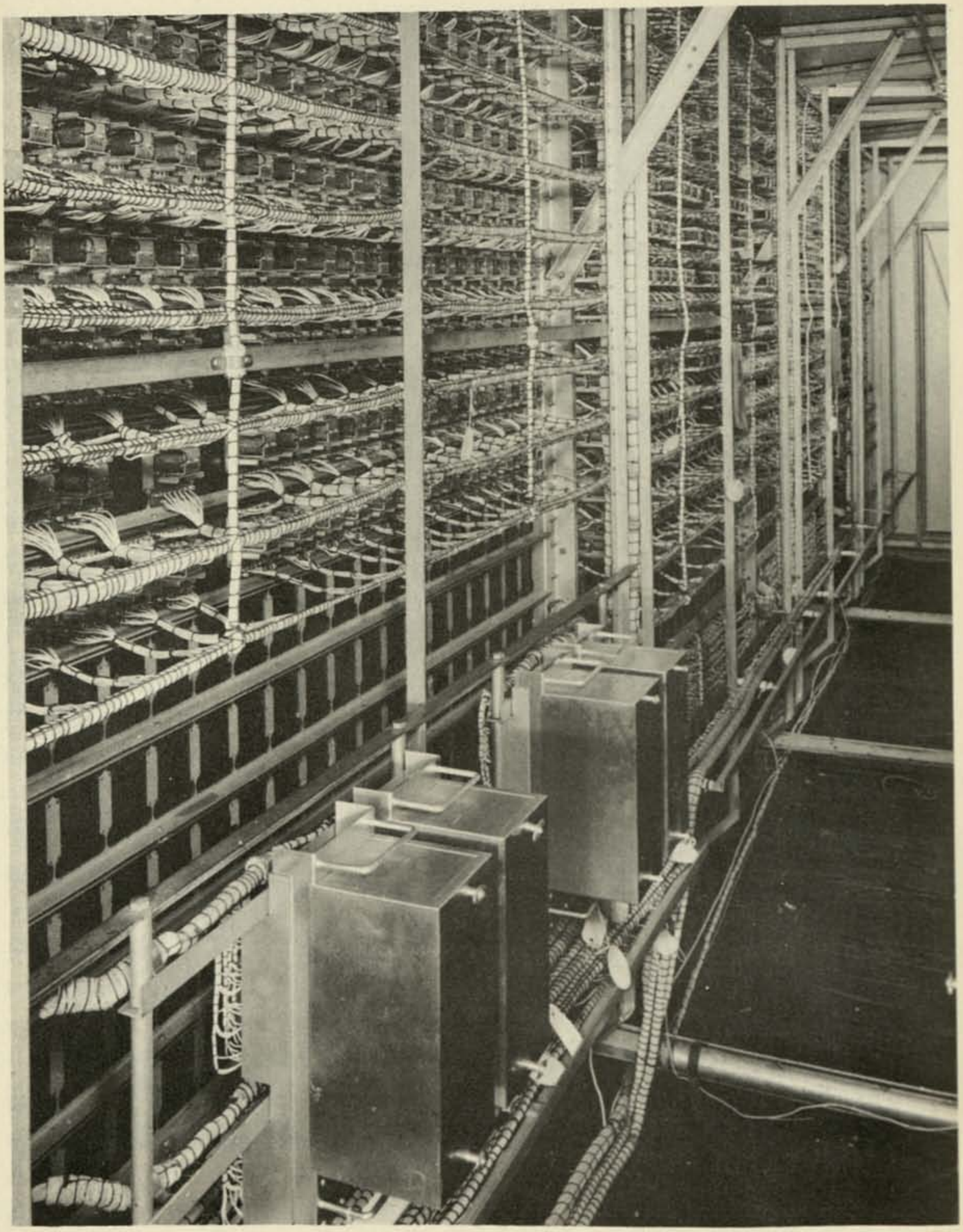

Plate XXI Interior of Relay Cubicle

Considerable flexibility is available as regards interlinear and intercolumnar spacing. Hence, tabular results may be printed in final form, ready for photolithographic reproduction. The operation-code 02, on line 16 of Fig. 1.2, not only orders that an argument standing in register (055) shall be printed, but also that it shall be followed by horizontal spacing. Further details concerning the operation and coding of the input and output devices will be found in Chapter IX.

So far this chapter has been concerned with those components of the calculator which are connected to the number transfer buss. There remain to be discussed the sequence mechanisms, and the sequence tapes which supply them with the instructional data necessary to control the machine. These tapes are prepared manually on the sequence tape preparation unit, Plate XVIII. They are six holes wide, and have smaller sprocket holes running between the third and fourth columns, counting from left to right. Three lines of holes, 18 in all, correspond to each instruction in the coding form. At most, each instruction may require six digits; one representing the sign-code, three representing the in- or out-code, and two representing the operation-code. The largest digit contained in any code number is seven. Hence, three hole positions, corresponding to the values 4, 2, and 1 of the binary number system, are sufficient to represent any digit of any code. In all, there are possible

$2^3 - 1 = 7$ sign-codes,

$2^9 - 1 = 511$ in- or out-codes,

$2^6 - 1 = 63$ operation-codes.

Not all of the codes are assigned at present, many remaining available for future additions to the machine. A complete list of the codes now in use will be found in the appendix.

The 18 holes available for the representation of any one order to the machine are disposed as shown in Fig. 1.4. Figure 1.5 shows lines 20, 21, and 22, of the coding form, Fig. 1.2, together with the corresponding punching in the control tape. It should be noted that, in both

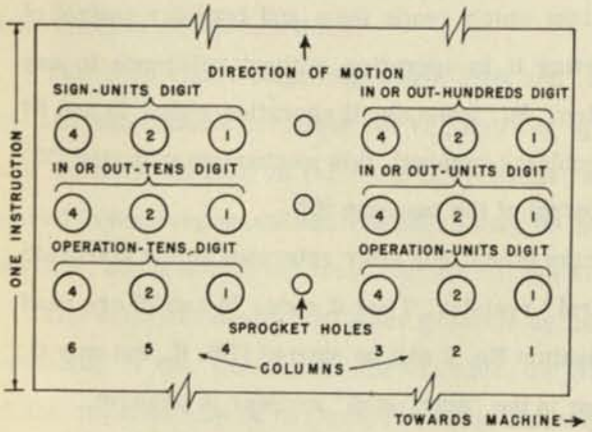

Fig. 1.4 - Control tape.

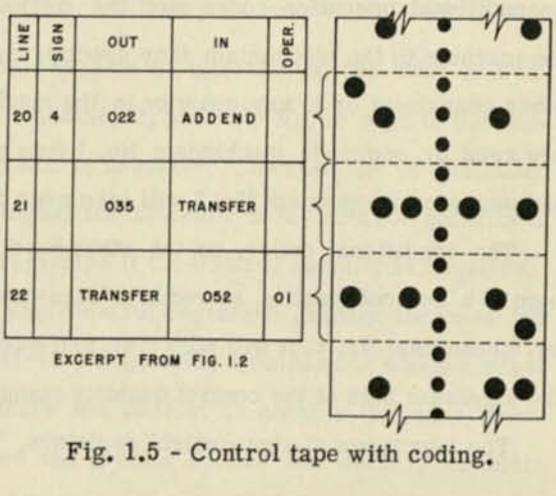

LINE	SIGN	OUT	IN	OPER.
20	4	022	ADDEND	
21		035	TRANSFER	
22		TRANSFER	052	01

EXCERPT FROM FIG. 1.2

Fig. 1.5 - Control tape with coding.

functional and control tapes, the leading edges of the code holes and of the sprocket holes are tangent to the same horizontal line. This provides an easy means of distinguishing the forward direction of the tape motion.

As previously mentioned, the calculator requires 30 instructions per second for its operation. Since each instruction is made up of 18 possible hole positions, it is clear that a total of 540 holes must be read each second. In order to keep the speed of the mechanical parts of the sequence mechanisms within bounds, each mechanism is provided with 180 sensing or reading pins, Plate XIX, which are operated intermittently three times every second by a geneva drive. Thus each sensing operation reads from the tape and delivers to the machine a total of ten operating instructions. These are temporarily stored in relays which function as time transformers matching the reading rate of the sequence mechanism to the utilization rate of the calculator. The sequence mechanisms, Plate XX, are driven by synchronous motors, independent of the cam unit motor, and therefore must be synchronized before the calculator is started.

Of the four sequence mechanisms, two are assigned to each side of the calculator. When two problems are being run at the same time, or when one problem is being run with the buss-tie relays open, each half of the machine is controlled by one of the two mechanisms on that side. Each may "call in" the other; that is, stop itself and start the other mechanism on that same side. Indeed, controls are available by means of which any one of the four sequence mechanisms may call for the operation of any other, provided that the buss-tie relays are closed, and that the one-or-two-problem switch is in the one-problem position. These control codes may be employed when the problem under consideration is such that several subroutines are desirable in the coding.

Two different types of codes are assigned to each sequence mechanism by means of which it may be called into operation. Of these the first type is referred to as unconditional. The unconditional operation-codes stop the mechanism which reads them and transfer control of the machine to the mechanism they specify, starting it in operation, without reference to any other component or to any quantity in the machine. For example, if operation-codes 73 and 67 are read by sequence mechanism No. 1 (two problems running), this mechanism will stop (73) and sequence mechanism No. 2 will take over control of the machine (67).

The conditional codes, on the other hand, take effect only after reference to the algebraic sign of a control quantity, stored in a "sign-control" register. Thus if codes 74 and 70 are read by mechanism No. 1, it will stop (74), and mechanism No. 2 will be started (70), if, and only if, the algebraic sign of the control quantity standing in the "start-stop" register is positive.

The four types of sign-control registers, "start-stop", "check", "sign-invert", and "code-interchange", are duplicated on the two sides of the calculator, Fig. 1.1. These registers are connected directly to the buss by in-relays, and store only the algebraic sign of any quantity transferred into them. They are not provided with out-relays.

Under control of a check quantity read into the check register, the calculator is stopped, an indicator lamp is lighted, and an alarm is rung, if and only if, the sign of the check quantity is negative. When the check quantity is positive, the machine continues in operation. For purposes of computation, it may be shown that all mathematical checks may be reduced to consideration of the inequality,

$$T - |u| \geq 0,$$

where T is a predetermined positive tolerance, and u is a comparison quantity, such as the difference between two independently computed values of the same function. On lines 7 and 8 of Fig. 1.2, the negative absolute value of a comparison quantity u is added to a tolerance T in one of the addition units. The check procedure is completed when the difference is routed to the check register, line 12.

This feature of automatic checking has proven invaluable to the successful operation of the Automatic Sequence Controlled Calculator throughout its four years of continuous computation. Indeed, the inclusion of this simple circuit is essential if the accuracy of the computed results is to be assured.

The sign-invert registers, (074) and (474), store the algebraic sign of a control quantity, a, lines 5 and 11 of Fig. 1.2. Any quantity transferred under control of the sign-invert register using sign-code 4, line 20, will be inverted, if, and only if, a is negative. Many applications of the use of the sign-control registers will be found throughout succeeding chapters, especially in Chapter VII on the functional units. In passing however, it is worth while to note that these registers make possible the reduction by one-half of the length of functional tape required for interpolation on odd functions.

The code-interchange registers, (076) and (476), operate to interchange the even and odd in- and out-codes controlling the registers of the machine, if, and only if, the sign of the control quantity standing in the code-interchange register is negative. Thus one set of quantities stored in the even numbered registers may be selected for transfer if the control quantity is positive, and a second set from the odd numbered registers if the control quantity is negative.

The selective operations made possible by the sign-control registers greatly increase the flexibility of the calculator. For example, the start-stop registers, by means of which control of the machine may be transferred from one sequence mechanism to another, in many cases permit the inclusion of short repetitive control tapes and greatly reduce the work of problem preparation. Moreover, the use of control quantities whose values may be increased or decreased during each revolution of a control tape may lead to the design of single systems of tape applicable to whole classes of solutions of the same type of problem. For instance, one of the first problems run on the calculator as a part of its preliminary testing required the inversion of a matrix of order 38. The use of the sign-control registers made it possible to design tapes not only for this specific matrix, but also for the inversion of matrices of order n in general. Further details on the use of these registers will be found in subsequent chapters, especially in Chapter XI dealing with problem preparation and the solution of typical examples.

REFERENCES

1. Previously published reports on the calculator are:
    - (a) "Proposed Automatic Calculator for Dahlgren Proving Ground," Report No. 13, Bureau of Ships Computation Project, November, 1944.
    - (b) Robert V. D. Campbell, Mark II Calculator, "Proceedings of a Symposium on Large-Scale Digital Calculating Machinery," Annals of the Computation Laboratory of Harvard University, vol. 16, Cambridge, Mass., 1948, pp. 69-79.
    - (c) Frederick G. Miller, Application of Printing Telegraph Equipment to Large-Scale Calculating Machinery, "Proceedings of a Symposium on Large-Scale Digital Calculating Machinery," Annals of the Computation Laboratory of Harvard University, vol. 16, Cambridge, Mass., 1948, pp. 213-222.
2. Samuel B. Williams, Bell Telephone Laboratories' Relay Computing System, "Proceedings of a Symposium on Large-Scale Digital Calculating Machinery," Annals of the Computation Laboratory of Harvard University, vol. 16, Cambridge, Mass., pp. 47-48.
3. Franz L. Alt, "A Bell Telephone Laboratories Computing Machine - I," Mathematical Tables and Other Aids to Computation, vol. 3 (1948), pp. 2-4.
4. "A Manual of Operation for the Automatic Sequence Controlled Calculator," Annals of the Computation Laboratory of Harvard University, vol. 1, Cambridge, Mass., 1946.
5. Howard H. Aiken and Grace M. Hopper, "The Automatic Sequence Controlled Calculator," Electrical Engineering, vol. 65 (1946), pp. 384-391, 449-454, 522-528.

CHAPTER II

BASIC CIRCUITS

This chapter will be concerned with certain elementary electrical circuits which are basic to the construction of the several components of the calculator. In large part, these are derived from the "cascade circuit" of which an example is shown in Fig. 2.1. Here the relays designated A8, A4, A2, and A1 have two, three, five, and nine double-throw contacts, respectively. One in each case is employed as a hold contact, while the remaining contacts are connected in cascade.

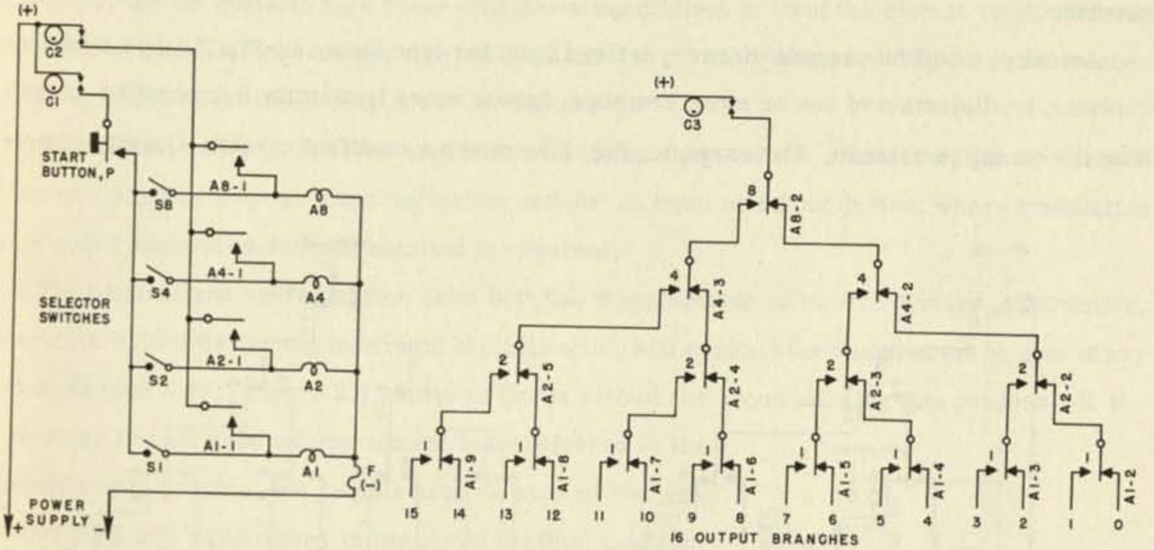

Fig. 2.1 - Cascade circuit.

In the figure, 15 contacts on four relays are arranged to yield 16 different output circuits. In the general case, n relays having $2^n - 1$ contacts (not including hold contacts) may be employed in the construction of a cascade circuit having 2^n branches.

The circuit shown in Fig. 2.1 is supplied with electrical impulses derived from the cam-controlled contacts C1, C2, and C3. All of the cams are driven by the same rotating shaft and are timed as shown in Fig. 2.2. The circuits connecting C1 and the A-relay coils are completed through the common start button P and the selector switches S8, S4, S2, and S1. Hence, the circuit remains inoperative until P is closed. When P is closed, an impulse derived from C1 will pick up

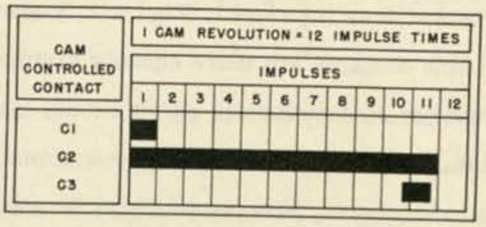

CAM CONTROLLED CONTACT	1 CAM REVOLUTION = 12 IMPULSE TIMES											
	IMPULSES											
	1	2	3	4	5	6	7	8	9	10	11	12
C1	■											
C2	■	■	■	■	■	■	■	■	■	■	■	
C3											■	

Fig. 2.2 - Timing.

the A-relays indicated by the selector switches. Then, even after the start button has been released, the energized relays will remain in their operated positions for a period of 11 impulses by virtue of the hold impulse derived from C2. During the time the A-relays are positioned, C3 will supply an impulse to one of the 16 output branches of the cascade. Such a "read-through" impulse is shown in Fig. 2.2 beginning at 10 3/4 time.

Now suppose the selector switches of Fig. 2.1 to be replaced by contacts controlled by tape reading pins. The circuit then becomes an example of one of the control pyramids of a sequence unit. In this case, a code number, read from the control tape, is translated into a configuration of the A-relays. Thus the A-relays are so positioned that a read-through impulse may be delivered by the cascade to the particular component of the calculator called for by the code number.

Actually, modified cascade circuits, derived from the type shown in Fig. 2.1 by omission of contacts, or distortion of one or more branches, appear more frequently in computing circuits than the complete cascade. For example, Fig. 2.3a shows a modified cascade circuit employed to obtain a decimal digit from its coded equivalent. Contacts on the A4 and A2 relays are omitted on the 8 and 9 output branches since the presence of an eight is sufficient evidence that no two or four is present. Figure 2.3b shows a variation of Fig. 2.3a, having the advantage that the nine contacts are more equably distributed among the relays. It is, of course, advantageous to use identical relays in all elements. As previously mentioned, the relays used in the calculator have six double-throw contacts. Therefore a relay such as A8 in Fig. 2.3a has four unused contacts, whereas in Fig. 2.3b only three remain unused. However, it is more desirable to waste some contacts in this manner than to engineer and produce relays having different

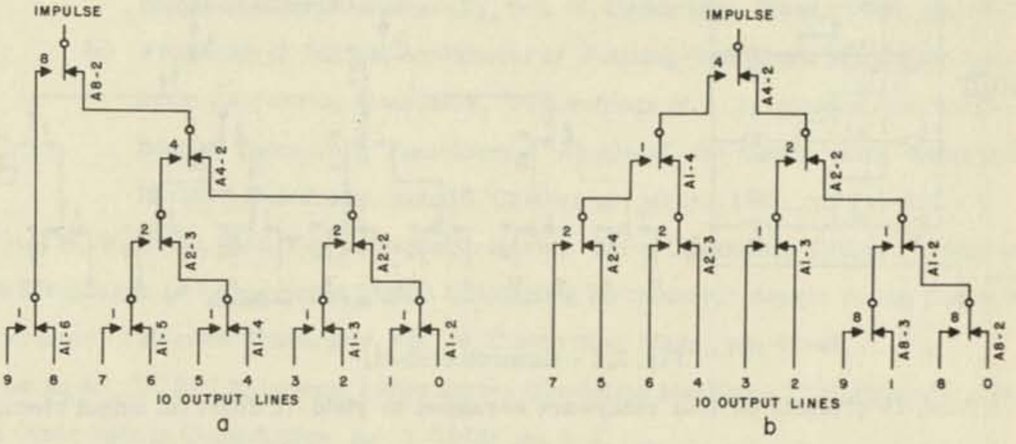

Fig. 2.3 - Modified cascade circuits.

numbers of contacts. Standardization of the relays also reduces the spare parts requirements to a minimum.

Both of the circuits in Fig. 2.3 use nine relay contacts. This is the minimum possible number for this circuit. However, reduction to the minimum number of contacts is not necessarily important in itself. Frequently, a larger number of contacts may be employed in order to arrive at a smaller number of relays. Moreover, a redistribution of contacts may also reduce the relay requirements. For example, in Fig. 2.3, circuit (b) leaves two contacts of relay A1 unused, while circuit (a) requires all six of the contacts of A1. Since in many cases, the relay contacts representing a specific digit must form parts of more than one circuit, circuit (b) has an obvious advantage over circuit (a). On the other hand, if, after all possibilities are exhausted, the six contacts on a relay still prove insufficient to meet the circuit requirements, the coils of two or more relays may be connected in parallel thus providing 12 or more contacts. A single hold circuit may serve for the group.

The circuits of Fig. 2.3 find application in many parts of the calculator, particularly in those components such as a multiplication unit or an input or output device, where translation from coded decimal to decimal notation is required.

The addition and multiplication units both use complements on nine to perform subtraction. Therefore both units are equipped with circuits which will produce the complement on nine of any coded decimal digit. Figure 2.4 shows an invert circuit for accomplishing this purpose. If the sign-relay is energized and its contact is transferred to the normally open position, the complement on nine of the recorded digit will be delivered in the coded decimal notation.

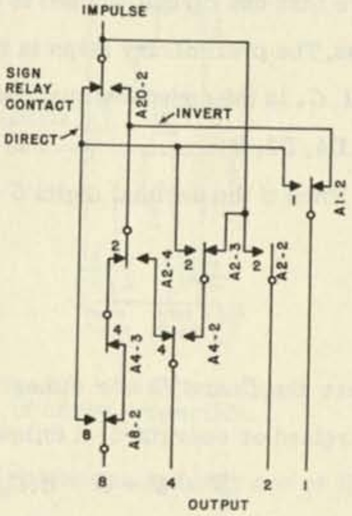

Fig. 2.4 - Invert circuit.

The purpose of the circuits already described has been to route a single impulse to one or more of several output branches. On the other hand, the shift circuit, Fig. 2.5, receives and transfers as many as ten impulses. If none of the S-relays are energized, the input and output branches will be connected in one to one correspondence. If the S1 relay is energized, the 10, 9, ..., 2, 1 input lines are connected to the 9, 8, ..., 1, 0 output lines, producing a shift of one column to the right. According to the combination of the S-relays energized, a shift of from one to ten columns to the right is produced. In the case of the tenth input line, the cascade is almost complete, since it may be connected to any one of the eleven output branches. However, the first input line may lead only to the zero or one output branch. Clearly, the shift circuit is derived by coalescing ten modified cascade circuits.

All of the foregoing circuits deal either with the selection of or with the transfer of digits. It remains now to consider the problem of combining digits as in addition. In the calculator, more than one circuit is used to complete an addition and the process is carried out in several steps. The preliminary steps in the addition of two decimal digits are the transfer of the augend digit C, in the coded decimal notation, to relays C8, C4, C2, C1 and the addend digit D to relays D8, D4, D2, D1.

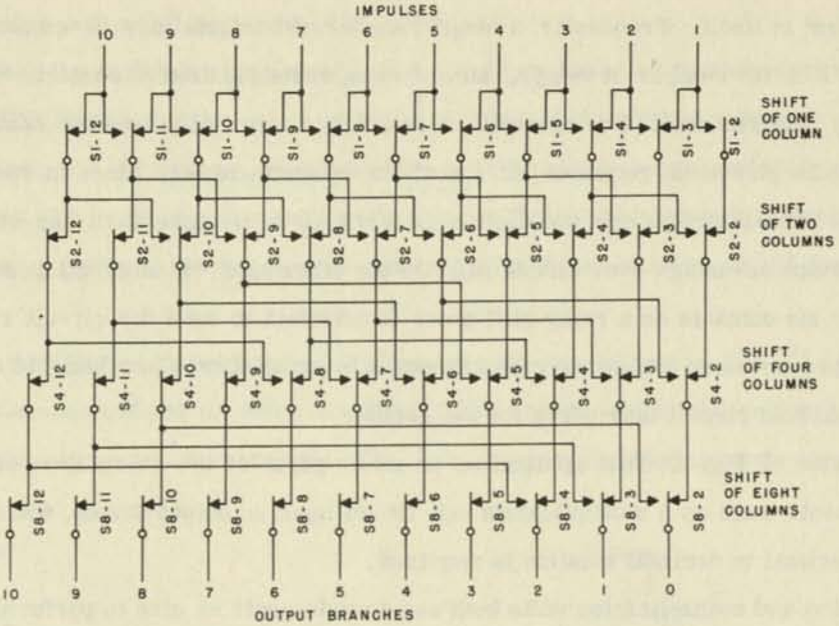

Fig. 2.5 - Shift circuit.

Then if the decimal digits C and D are written in the form,

$$C = 8C_8 + 4C_4 + 2C_2 + C_1,$$

and

$$D = 8D_8 + 4D_4 + 2D_2 + D_1,$$

where the C_i and D_i are either zero or one, according as the corresponding relays are de-energized or energized, it follows that their sum may be expressed as,

$$S = C + D = 8(C_8 + D_8) + 4(C_4 + D_4) + 2(C_2 + D_2) + (C_1 + D_1). \qquad (2.1)$$

The first three terms of the right hand side of equation (2.1) represent a sum of even digits, while the fourth term represents a quantity to be added in the event that either C, or D, or both, are odd. Hence, the addition of two decimal digits may be reduced to the problem of designing circuits to evaluate,

$$S_e = 8(C_8 + D_8) + 4(C_4 + D_4) + 2(C_2 + D_2),$$

$$S_o = C_1 + D_1,$$

and $$S = C + D = S_e + S_o.$$

These circuits, together with those which increase S by one in the event of a carry arising in a lower column, will comprise a system sufficient for the addition of decimal quantities. Actually it will be found advantageous to combine the circuit producing $S_o = C_1 + D_1$ with the carry circuit, as will be shown later.

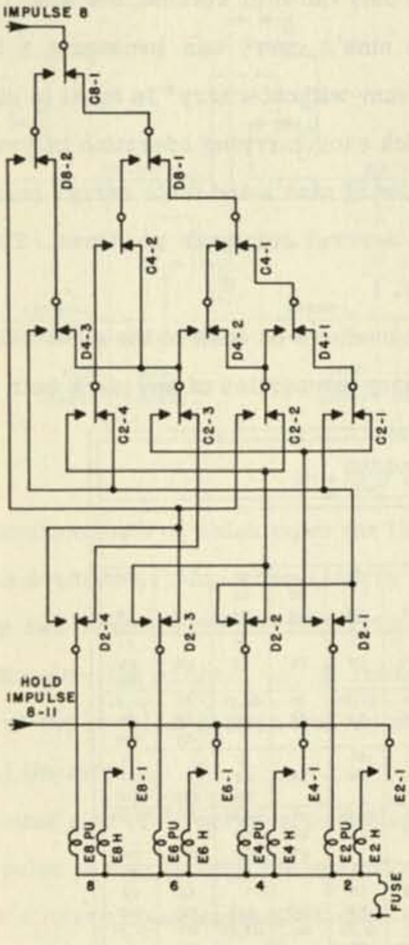

Fig. 2.6 - Addition circuit for even digits.

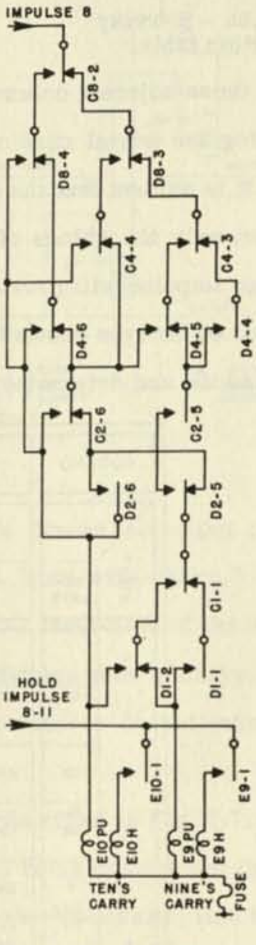

Fig. 2.7 - Determination of carry properties.

A circuit to produce S_e is shown in Fig. 2.6. This circuit positions one and only one of the four E-relays, E8, E6, E4, or E2 under control of the C- and D-relay contacts, omitting those on C1 and D1. The complete addition table of this circuit is shown in Fig. 2.8a.

Before further discussing the addition circuits, it will be necessary to consider nine's and ten's carry. Let C and D be digits standing in the nth columnar positions of two decimal quan-

ADDEND		AUGEND				
DIGITS	DIGITS	0,1	2,3	4,5	6,7	8,9
	RE-LAYS		C2	C4	C2 C4	C8
0,1			E2	E4	E6	E8
2,3	D2	E2	E4	E6	E8	
4,5	D4	E4	E6	E8		E2
6,7	D2 D4	E6	E8		E2	E4
8,9	D8	E8		E2	E4	E6

Fig. 2.8a - E-relay addition table.

tities. When these digits are added, three possibilities arise.

(1) $S = C + D > 9$. Then a unit carry must be added to the sum of the digit pair standing in the $(n+1)$ st columnar position. This is defined as ten's carry.

(2) $S = C + D < 9$. In this case, the distribution of carrys is unaffected.

(3) $S = C + D = 9$. Then a carry arising in the $(n-1)$ st column will affect not only the n th column, but also the $(n+1)$ st. Clearly, such nine's carry can propagate a ten's carry through all those adjacent columns for which the "sum-without-carry" is equal to nine.

Excluding the trivial case of a machine in which each carrying operation is performed individually, it is evident that the complete distribution of nine's and ten's carrys must be established, given only the values of the digits in the several columnar positions. Then a single read-through impulse will provide the correct sum.

A circuit of the type shown in Fig. 2.7 includes contacts on each of the eight relays representing C and D, and determines and stores the carry properties of any such pair of decimal

ADDEND		AUGEND									
DIGIT	DIGIT	0	1	2	3	4	5	6	7	8	9
	RE-LAYS		C1	C2	C1 C2	C4	C1 C4	C2 C4	C1 C2 C4	C8	C1 C8
0			C1	E2	C1 E2	E4	C1 E4	E6	C1 E6	E8	C1 E8 E9
1	D1	D1	C1,D1	D1 E2	C1,D1 E2	D1 E4	C1,D1 E4	D1 E6	C1,D1 E6	D1 E8 E9	C1,D1 E8 E10
2	D2	E2	C1 E2	E4	C1 E4	E6	C1 E6	E8	C1 E8 E9	E10	C1 E10
3	D1 D2	D1 E2	C1,D1 E2	D1 E4	C1,D1 E4	D1 E6	C1,D1 E6	D1 E8 E9	C1,D1 E8 E10	D1 E10	C1,D1 E10
4	D4	E4	C1 E4	E6	C1 E6	E8	C1 E8 E9	E10	C1 E10	E2 E10	C1 E2 E10
5	D1 D4	D1 E4	C1,D1 E4	D1 E6	C1,D1 E6	D1 E8 E9	C1,D1 E8 E10	D1 E10	C1,D1 E10	D1 E2 E10	C1,D1 E2 E10
6	D2 D4	E6	C1 E6	E8	C1 E8 E9	E10	C1 E10	E2 E10	C1 E2 E10	E4 E10	C1 E4 E10
7	D1 D2 D4	D1 E6	C1,D1 E6	D1 E8 E9	C1,D1 E8 E10	D1 E10	C1,D1 E10	D1 E2 E10	C1,D1 E2 E10	D1 E4 E10	C1,D1 E4 E10
8	D8	E8	C1 E8 E9	E10	C1 E10	E2 E10	C1 E2 E10	E4 E10	C1 E4 E10	E6 E10	C1 E6 E10
9	D1 D8	D1 E8 E9	C1,D1 E8 E10	D1 E10	C1,D1 E10	D1 E2 E10	C1,D1 E2 E10	D1 E4 E10	C1,D1 E4 E10	D1 E6 E10	C1,D1 E6 E10

Fig. 2.8b - Relays energized before addition.

digits. If the sum $S = C + D$ is ten or more, the ten's carry relay E10 is energized. If the sum is exactly nine, the nine's carry relay E9 is energized. The tabulation in Fig. 2.8b shows the relays thus far energized for each possible pair of augend and addend digits.

The circuit of Fig. 2.9 controls the propagation of carry from column to column. As drawn, the circuit is that required for a four-column machine, three columns of digits, and one column storing the algebraic sign, zero or nine. This circuit has two output branches in each columnar position, both of which enter the final addition circuit. One of the output branches in each column leads to a "sum-without-carry" and the other to a "sum-with-carry." The choice between the two branches in the nth column is made only after inspection of the carry properties of the $(n-1)$st column, or, if the $(n-1)$st column indicates nine's carry, only after inspection of the $(n-2)$nd column and so on. The following examples should make clear the operation of the circuit.

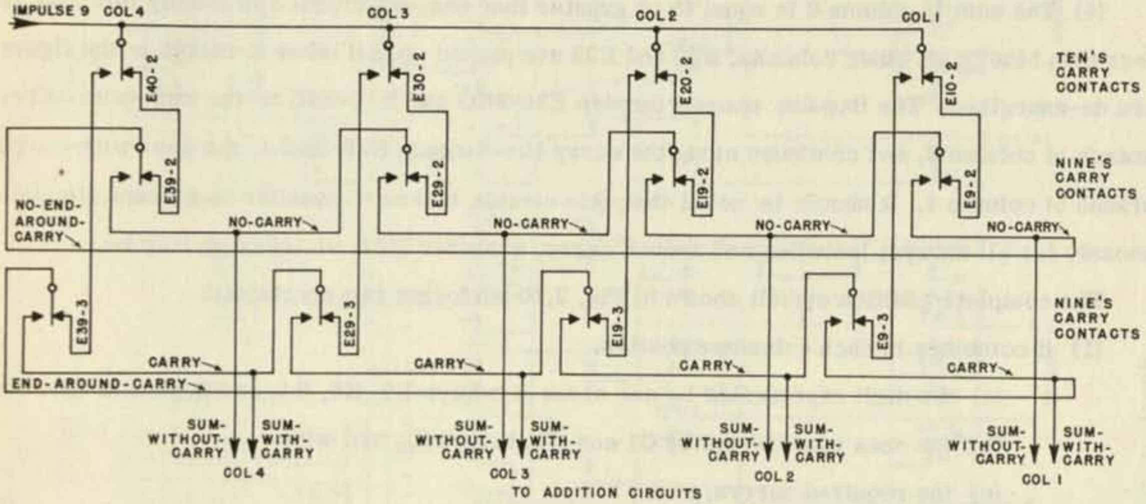

Fig. 2.9 - Carry circuit.

(1) No nine's or ten's carry in any column. No E-relays energized in Fig. 2.7. The read-through impulse passes through the normally closed ten's carry relay contact and the normally closed nine's carry relay contact of each column, and along the "no-carry" line to the sum-without-carry branch of the next higher column. In the case of column 4, the impulse passes through the two normally closed contacts, E40-2NC and E39-2NC, and along the "no-end-around-carry" line to the sum-without-carry branch of column 1.

(2) The sum in column 2 is equal to nine, and is less than nine in all other columns. E19 is energized, all other E-relay contacts in the figure are normally closed. The impulse to read through the addition circuit of column 1 arises from column 4 through the no-end-around-carry line as before. An impulse enters the column 2 sum-without-carry branch through E10-2NC,

E9-2NC and the no-carry line. It further travels along the no-carry line and through E19-2NO to the sum-without-carry branch of column 3.

(3) The sum in column 2 is equal to or greater than ten, and is less than nine in all other columns. E20 is energized, all other E-relay contacts in Fig. 2.9 are normally closed. The read-through impulse passes through E20-2NO, E19-2NC, along the carry line to the sum-with-carry branch of column 3.

(4) The sum in column 2 is equal to or greater than ten, in column 3 is exactly nine, and is less than nine in all other columns. E20 and E29 are picked up, all other E-relays in the figure are de-energized. The impulse passes through E20-2NO and E19-3NC to the sum-with-carry branch of column 3, and continues along the carry line through E29-3NO to the sum-with-carry branch of column 4. It should be noted that this circuit makes it possible to account simultaneously for all carrys, including end around carry, whatever their distribution may be.

The complete addition circuit shown in Fig. 2.10 performs two operations:

(1) it combines in each columnar position,

  (a) the digit represented by one of the E-relays E8, E6, E4, or E2, that is S_e, with

  (b) the ones represented by C1 and D1, that is S_o, and with

  (c) the required carrys;

(2) it transforms the sum S into the usual coded decimal notation.

The circuit as drawn illustrates these operations for the case of a four-column machine. Reference to Fig. 2.8b will indicate which relays are energized for a particular set of augend and addend digits. The upper part of the circuit, above the dotted line, shows the contacts routing carrys, while the lower part is composed of the coalesced sum-without-carry, sum-with-carry, and transformation circuits.

As indicated in Figs. 2.6 and 2.7 all of the E-relays are positioned simultaneously by a single impulse (in the calculator, at eight time). These relays have double coils, the second coil on each relay being used in its hold circuit. As soon as the E-relays are positioned, an impulse (at nine time) may read through the circuit of Fig. 2.10 to deliver the sum. Thus three steps are required to perform a decimal addition:

(1) read-in of the augend and addend to the C- and D-relays;

(2) positioning of the E-relays;

(3) read-out of sum.

A five column binary addition circuit is shown in Fig. 2.11. This circuit performs either an addition or a subtraction using binary complements. Here, one binary quantity A is represented by the relays A16, A8, A4, A2, A1, and a second binary quantity B by the relays B16, B8,

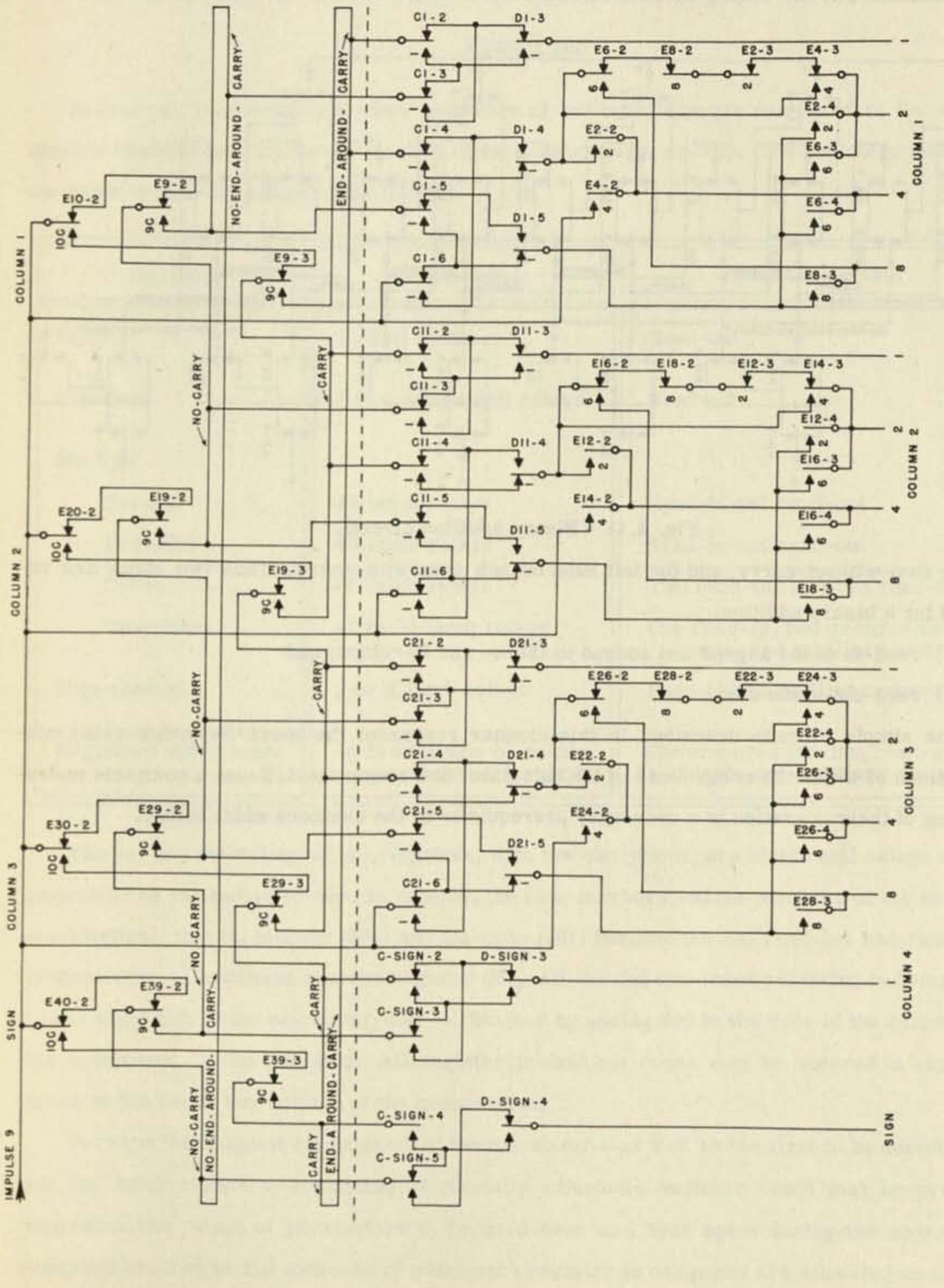

Fig. 2.10 - Addition circuit.

B4, B2, B1. The upper part of this circuit provides for carry using contacts on the A- and B-relays themselves. The three relay contacts in each column below the carry lines represent the combination of two binary addition circuits into a single circuit, the right hand branch producing sum-without-carry, and the left hand branch sum-with-carry. Thus two steps are required for a binary addition:

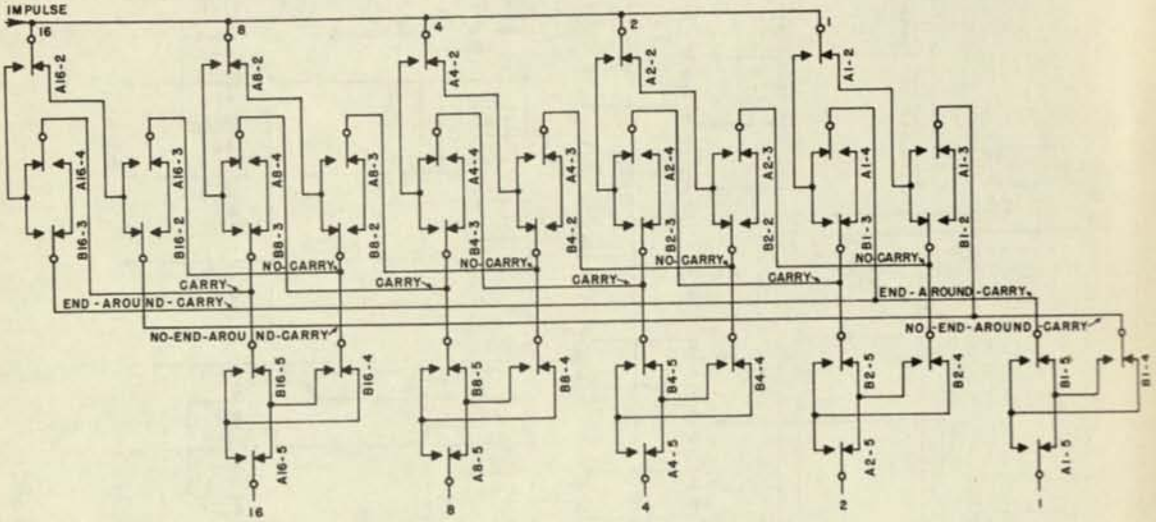

Fig. 2.11 - Binary addition circuit.

(1) read-in of the augend and addend to the A- and B-relays; and

(2) read-out of the sum.

The simple circuits described in this chapter represent the more important relay configurations of which the components of the calculator are constructed. Hence a complete understanding of their operation is a necessary prerequisite to the chapters which follow.

CHAPTER III

REGISTERS

In general, the storage and other registers of the calculator are connected to the 46-wire number transfer buss by one or more in-relays, out-relays, or both. The registers included in the machine may be classified as follows:

Register	Composition	Buss Connection
Input	14 dial switches	Read-out
Constant	1 to 5 single coil relays	Read-out
Storage		
Normal	46 latch relays	Read-in and read-out
Transfer	46 latch relays	Read-in and read-out
Cross	46 latch relays	Two read-ins and two read-outs
Functional	46 to 74 latch relays	One read-in, two or three read-outs, and auxiliary controls
Sign-control	1 or 2 latch relays	Read-in and auxiliary controls
Registers within units	46 to 98 single or double coil or latch relays	One or more read-ins, read-outs, or both, and auxiliary controls

The in- and out-relays of the registers, with few exceptions, are single coil relays and are controlled by in- and out-codes. In general, the code numbers and the numbers of the registers are identical; that is, in-code (061) and out-code (061) indicate normal read-ins and read-outs, respectively, of functional storage register 061. All in- and out-codes referring to components on the right side of the calculator may be obtained by adding 400 to the code of the corresponding component on the left side. All register in- and out-codes may be entered in any blank space in the in- or out-column of the coding form.

Perhaps the simplest components of the calculator—as well as the first to be completed—are the input registers, consisting of manually adjustable switches which may be preset to represent the values of parameters to be used over and over again during the course of a computation. The 14 dial switches of which each register is composed are allocated as follows:

Switches	Symbol
1 two-position	Algebraic sign of quantity x
10 ten-position	Ten digits of ρ
1 two-position	Algebraic sign of exponent j
1 two-position	Ten's digit of exponent j
1 ten-position	Unit's digit of exponent j

where $x = \pm \rho \times 10^j$. Further, each input register is equipped with a toggle switch called a "stop-read-out" switch. This may be used to prevent a read-out to the buss of the stored quantity, even though it has been called for by the coding.

The numbers of the input registers are identical with their out-codes and are:

Left side of Calculator		Right side of Calculator	
101	107	501	507
102	110	502	510
103	111	503	511
104	112	504	512
105	113	505	513
106	114	506	514

The out-code of an input register may be entered in any blank space in the out-column of the coding form.

Each input register is equipped with an out-relay permitting the passage of the stored quantity to the buss. Each out-relay is composed of eight single coil relays which are energized, Fig. 3.1, by one of the A-type impulses, Fig. 3.2, supplied by a cam-controlled contact. This impulse passes through the out-pyramid of a sequence unit and enters the operating coils of the relays. Each out-relay is separately fused. The two cam-controlled contacts supplying the impulses are made at every other odd impulse time, and remain closed for a period of two impulses. During the second impulse time, a single even impulse of type B reads through the contacts of the switches composing the input register and then through those of the

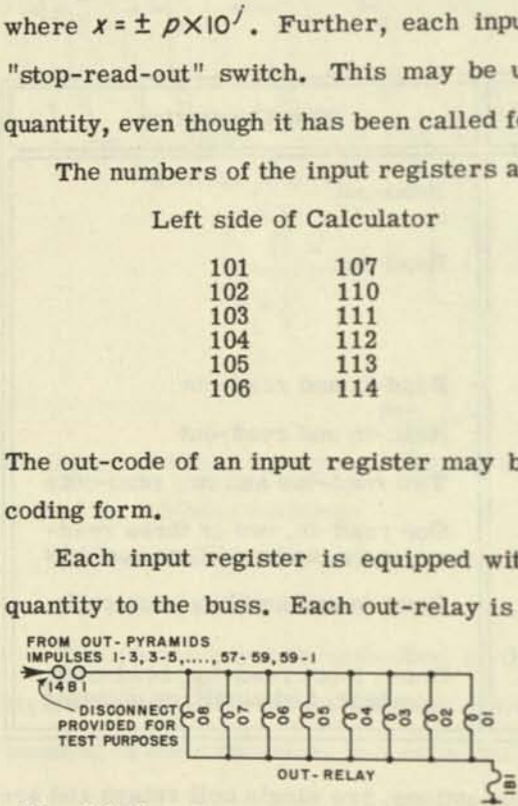

Fig. 3.1 - Input register 101, out-relay.

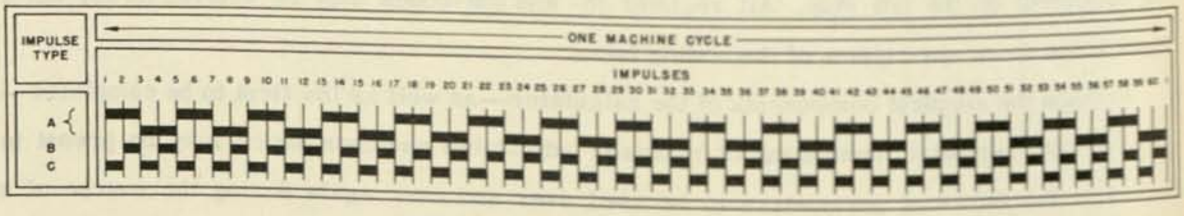

Fig. 3.2 - Impulse timing.

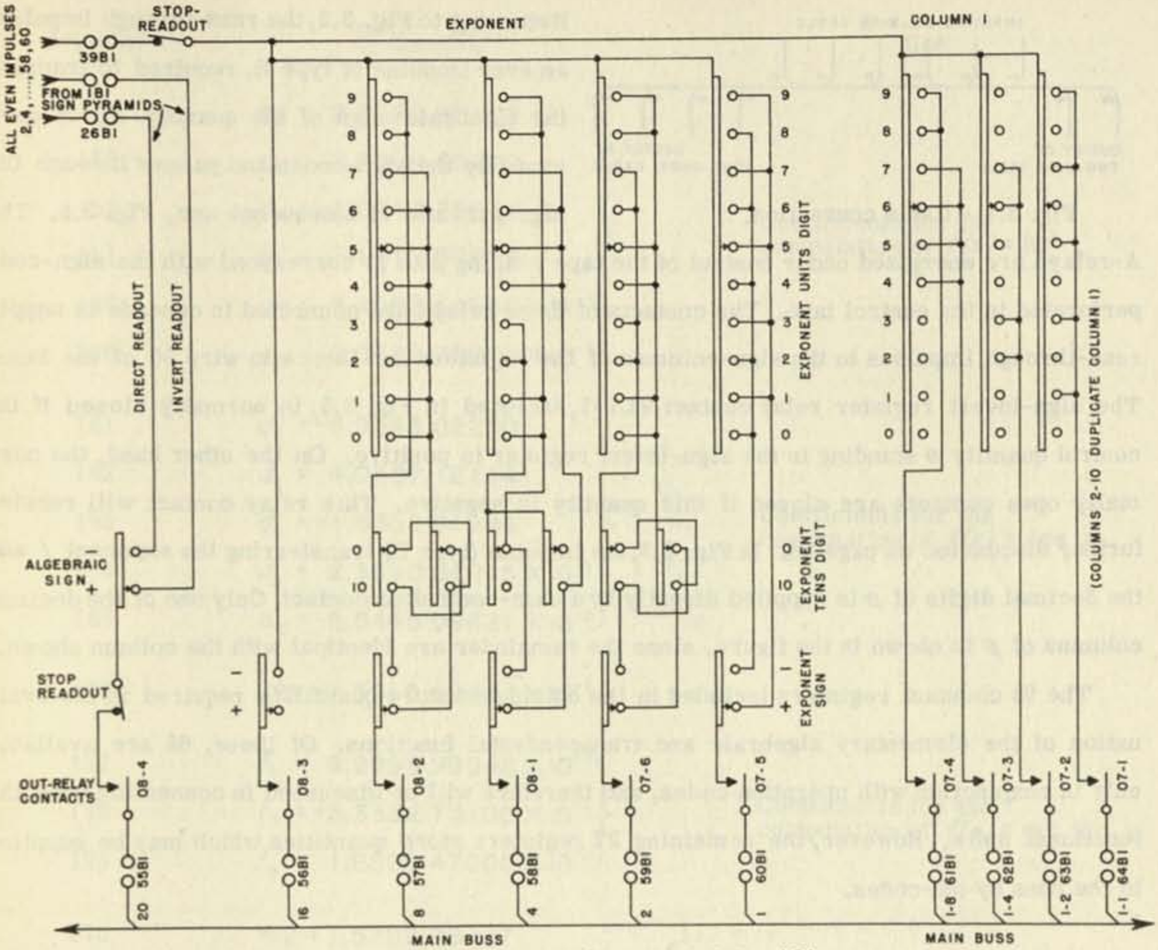

Fig. 3.3 - Read-out of input register 101.

out-relay to deliver the stored quantity to the buss, as shown in Fig. 3.3.

In this figure, as in all subsequent figures, the 46 wires of the number transfer buss are represented by a single line. A detail of this cable convention is shown in Fig. 3.4 where the direction in which an impulse is routed is indicated by the slope of the wire entering the cable.

The 46 wires of the number transfer buss will be labeled in terms of the symbols representing the quantity *x* as follows:

Wire Number	Symbol
20	Algebraic sign of quantity *x*
16, 8, 4, 2, 1	Exponent *j* in binary notation
10-8, 10-4, 10-2, 10-1	10th columnar digit of ρ in coded decimal notation
1-8, 1-4, 1-2, 1-1	1st columnar digit of ρ in coded decimal notation

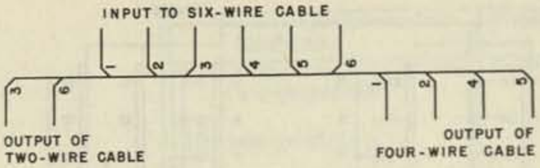

Fig. 3.4 - Cable convention.

Returning to Fig. 3.3, the read-through impulse, an even impulse of type B, required to transfer the algebraic sign of the quantity x, is governed by the sign-codes and passes through the sign-pyramid of a sequence unit, Fig. 3.5. The A-relays are energized under control of the tape reading pins to correspond with the sign-code perforated in the control tape. The contacts of these relays are connected in cascade to supply read-through impulses to the sign-columns of the registers and thence to wire 20 of the buss. The sign-invert register relay contact VL1-1, included in Fig. 3.5, is normally closed if the control quantity a standing in the sign-invert register is positive. On the other hand, the normally open contacts are closed if this quantity is negative. This relay contact will receive further discussion on page 58. In Fig. 3.3, the impulse (type B) transferring the exponent j and the decimal digits of ρ is supplied directly by a cam-controlled contact. Only one of the decimal columns of ρ is shown in the figure, since the remainder are identical with the column shown.

The 93 constant registers included in the calculator store quantities required in the evaluation of the elementary algebraic and transcendental functions. Of these, 66 are available only in conjunction with operation-codes, and therefore will be discussed in connection with the functional units. However, the remaining 27 registers store quantities which may be supplied to the buss by out-codes.

Register	Quantity	Use
124	$1/360 = 2.7777\,77778 \times 10^{-3}$	
125	$1/2 = 5.0000\,00000 \times 10^{-1}$	
131	$a_1 = -4.9999\,99403 \times 10^{-1}$	Coefficients for the computation of $f(x) = 1/\sqrt{x}$
132	$a_2 = 3.7500\,00000 \times 10^{-1}$	
133	$a_3 = -3.1277\,10000 \times 10^{-1}$	
134	$a_4 = 2.7344\,00000 \times 10^{-1}$	
141	$b_1 = 4.3429\,44608 \times 10^{-1}$	Coefficients for the computation of $f(x) = \log_{10} x$
142	$b_2 = -2.1714\,72410 \times 10^{-1}$	
143	$b_3 = 1.4486\,04900 \times 10^{-1}$	
144	$b_4 = -1.0857\,40000 \times 10^{-1}$	
150	$1.0000\,00000$	

REGISTERS

Register	Quantity	Use
151	$c_1 = 2.3025\ 85100$	Coefficients for the computation of $f(x) = 10^x$
152	$c_2 = 2.6509\ 49060$	
153	$c_3 = 2.0346\ 72634$	
154	$c_4 = 1.1712\ 52699$	
155	$c_5 = 5.4057\ 44930 \times 10^{-1}$	
156	$c_6 = 2.0738\ 78000 \times 10^{-1}$	
161	$d_2 = -4.9348\ 02200$ $-\frac{\pi^2}{2}$	Coefficients for the computation of $f(x) = \cos x$
162	$d_4 = 4.0587\ 12114$ $+\frac{\pi^4}{4!}$	
163	$d_6 = -1.3352\ 61944$ $-\pi^6/6!$	
164	$d_8 = 2.3530\ 51916 \times 10^{-1}$ $+\pi^8/8!$	
165	$d_{10} = -2.5445\ 09621 \times 10^{-2}$ $-\pi^{10}/10!$	
166	$1/2\pi = 1.5915\ 49431 \times 10^{-1}$	
171	$f_1 = 9.9999\ 99948 \times 10^{-1}$	Coefficients for the computation of $f(x) = \text{arc tan } x$
172	$f_3 = -3.3332\ 73100 \times 10^{-1}$	
173	$f_5 = 1.9826\ 47000 \times 10^{-1}$	
176	$\pi/2 = 1.5707\ 96327$ $\pi = 3.14159\ 2654$	

All constant registers consist of single coil relays, and are energized by type A impulses passing through an out-pyramid. Figure 3.6 shows the wiring of constant register 166 which supplies $1/2\pi = 1.5915\ 49431 \times 10^{-1}$ to the buss. Note that a constant register consists of an out-relay having only those impulse and buss connections required to define a particular numerical quantity. Since no connection is provided from the sign-pyramid to the constant registers, the sign-codes 1, 2, and 4 cannot be used with the read-out from such a register. However, sign-code 3, negative absolute value, may be used since this code supplies an impulse directly to column 20 of the buss, Fig. 3.5.

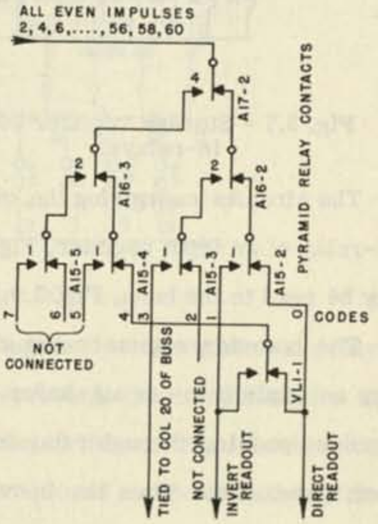

Fig. 3.5 - Sign-pyramid.

The storage registers are composed of 46 latch type relays. The use of these relays in the registers recording intermediate results insures that no quantity necessary to a

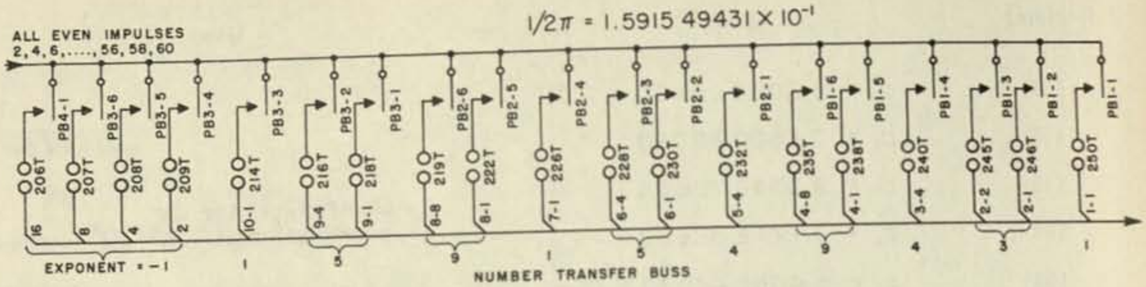

Fig. 3.6. - Read-out of constant register 166.

computation will be erased for any reason until after it is no longer needed, even if the power supply should fail.

The in- and out-codes of the storage registers are identical with their numbers. For the left side of the calculator these codes are:

	010	020	030	040	050	060
001	011	021	031	041	051	061
002	012	022	032	042	052	062
003	013	023	033	043	053	
004	014	024	034	044	054	
005	015	025	035	045	055	
006	016	026	036	046	056	
007	017	027	037	047		

As usual, the codes for the right side of the machine may be obtained by adding 400 to the corresponding codes for the left side.

The in-relay of a storage register is energized by a type A impulse passing through the in-pyramid of a sequence unit, Fig. 3.7. Simultaneously, a reset impulse, type C, passes through a reset-pyramid (corresponding to the particular in-pyramid) to energize the reset coils of the latch relays, Fig. 3.8, and return all contacts of the latch relays to their normally closed positions. Type B impulses may then enter from the buss to record a quantity in the register, Fig. 3.8.

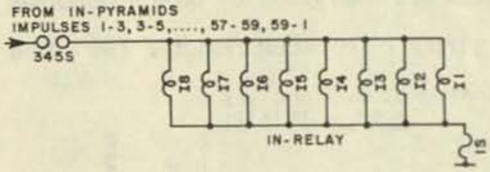

Fig. 3.7 - Storage register 001, in-relays.

The circuits energizing the out-relay of a storage register are the same as those for the out-relay of an input register, Fig. 3.1. After the out-relay has been closed the stored quantity may be read to the buss, Fig. 3.9, by type B read-through impulses.

The transfer registers are identical with the normal storage registers, except that they have no explicit in- or out-codes. Instead, their in-relays are energized at specified times by impulses passing through relay contacts controlled by those tape sensing pins which read register out-codes. Thus the in-relay of a transfer register may be energized by impulses initiated at 9, 25, 29, 33, 41, or 53 time, corresponding to lines 5, 13, 15, 17, 21, and 27 of the coding form, respectively (cf. Fig. 1.2). Further, the in-relay of a transfer register is energized if, and only if, an out-code is present in the coding at the time the transfer register is to be used. Similar considerations apply in the case of the out-relay which may be energized at 21, 27, 31, 35, 43, or 55 time, corresponding to lines 11, 14, 16, 18, 22, and 28 of the coding form, respectively, if, and only if, an in-code is entered in the corresponding line of coding. The circuits carrying out this pattern of impulses are so completely integrated with the sequencing unit that their discussion will be reserved for Chapter VI.

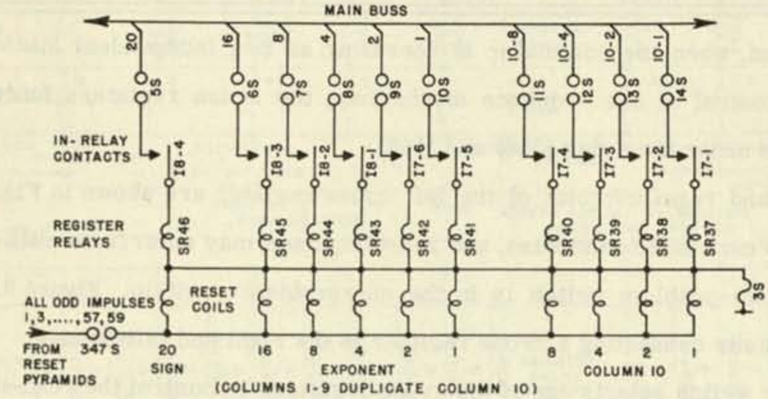

Fig. 3.8 - Storage register 001, read-in and reset.

The cross registers, 056 and 456, one on each side of the calculator, provide a means of transferring quantities from one side of the machine to the other when each side is operating independently on the same problem. If, in the circuit energizing the cross register in-relays, the contact on the one-or-two-problem switch is in the one-problem position, read-ins and read-outs may be made to both cross registers from both sides of the machine. In this case, the in- and out-codes controlling the two cross registers are employed as shown in the following tabulation.

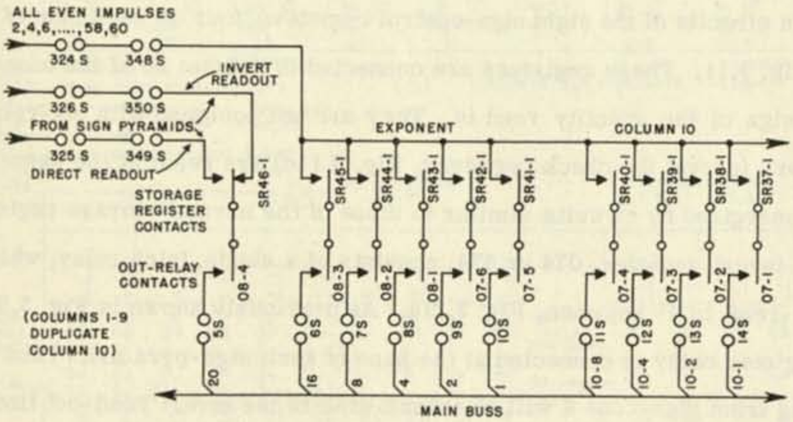

Fig. 3.9 - Read-out of storage register 001.

Cross Register Codes	Left Cross Register		Right Cross Register	
	In	Out	In	Out
Left Buss	056	056	057	057
Right Buss	457	457	456	456

On the other hand, when the calculator is operating as two independent machines, or on one problem under control of one sequence mechanism, the cross registers function as normal storage registers under the codes (056) and (456).

The read-in and reset circuits of the left cross register are shown in Fig. 3.10a. An in-relay connects to each side of the buss, and reset impulses may enter from either side provided that the one-or-two-problem switch is in the one-problem position. Figure 3.10c shows the two read-out circuits connecting a cross register to the right and left busses.

A fifty-wafer switch selects one of the cross registers to control the read-out lights on the main control panel. The read-out lights may be turned on or off by a toggle switch, as shown in Fig. 3.10b. If this switch is left in the "on" position, the read-out lights will maintain a running indication of the quantities being read into the particular cross register selected by the wafer switch. In this case, the register relay contacts, contrary to the established practice, make and break the noninductive currents to the lights.

The read-in circuits of the eight sign-control registers, four on each side of the calculator, are shown in Fig. 3.11. These registers are connected to column 20 of the buss and store only the algebraic sign of the quantity read in. They are not equipped with out-relays. The sign-control registers (except the check registers, Fig. 3.11d) are reset at the same time that their in-relays are energized by circuits similar to those of the normal storage registers.

Each sign-invert register, 074 or 474, consists of a single latch relay, which is energized if the quantity read in is negative, Fig. 3.11a. As previously shown in Fig. 3.5, a contact of a sign-invert register relay is connected at the base of each sign-pyramid. Thus a read-through impulse arising from sign-code 4 will be transmitted to the invert read-out line if, and only if, the quantity a standing in the sign-invert register is negative. The means by which this impulse is employed to invert the sign of a quantity standing in a storage register may best be understood by returning to Fig. 3.9, the read-out circuit of a normal storage register.

Each of the code-interchange registers, 076 and 476, consists of two latch relays connected in parallel, Fig. 3.11b. If the quantity b standing in a code-interchange register is negative, the operation-code 76 will interchange the even and odd in- or out-codes. That is, an even code

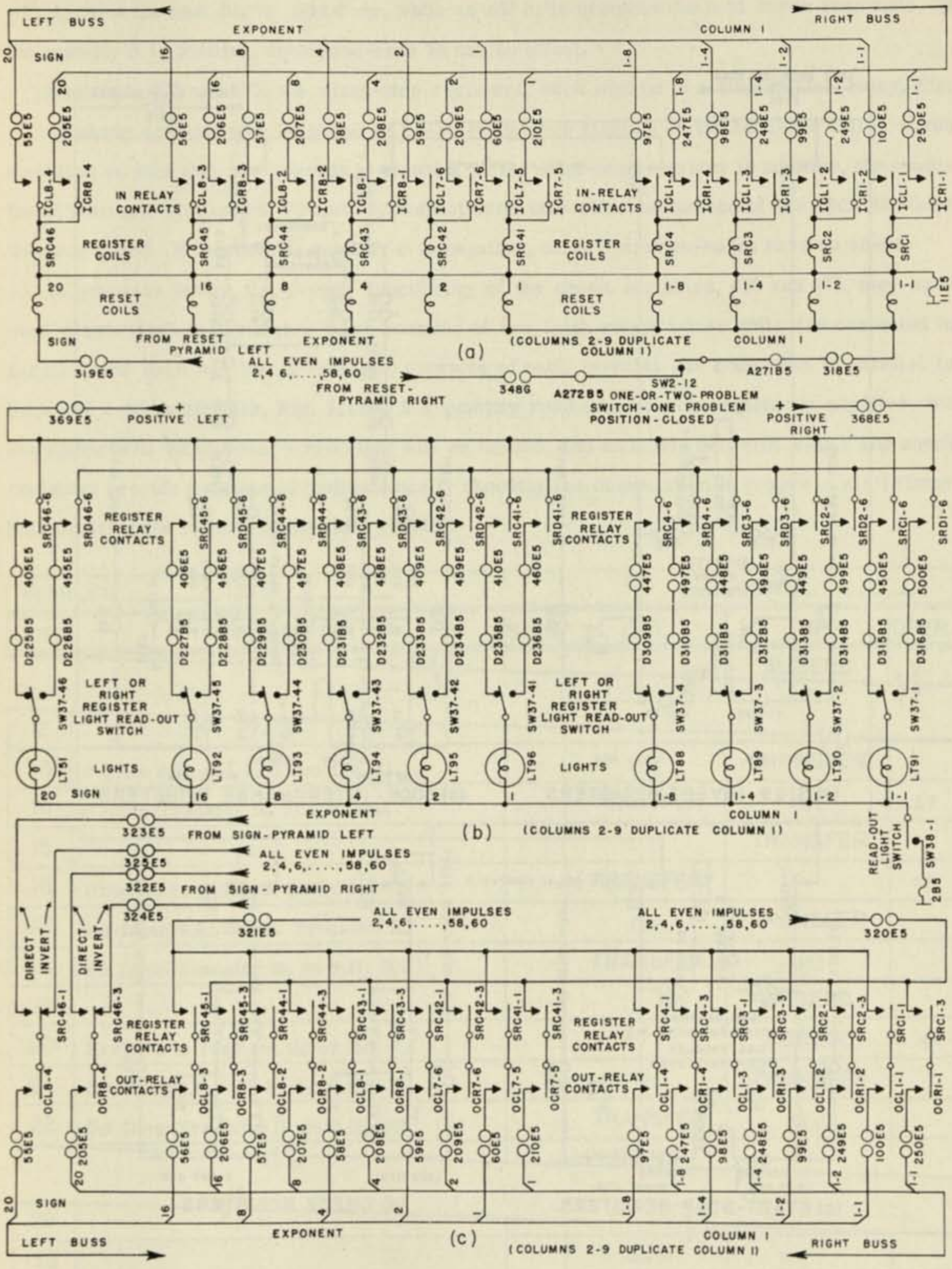

Fig. 3.10 - Left cross register 056.

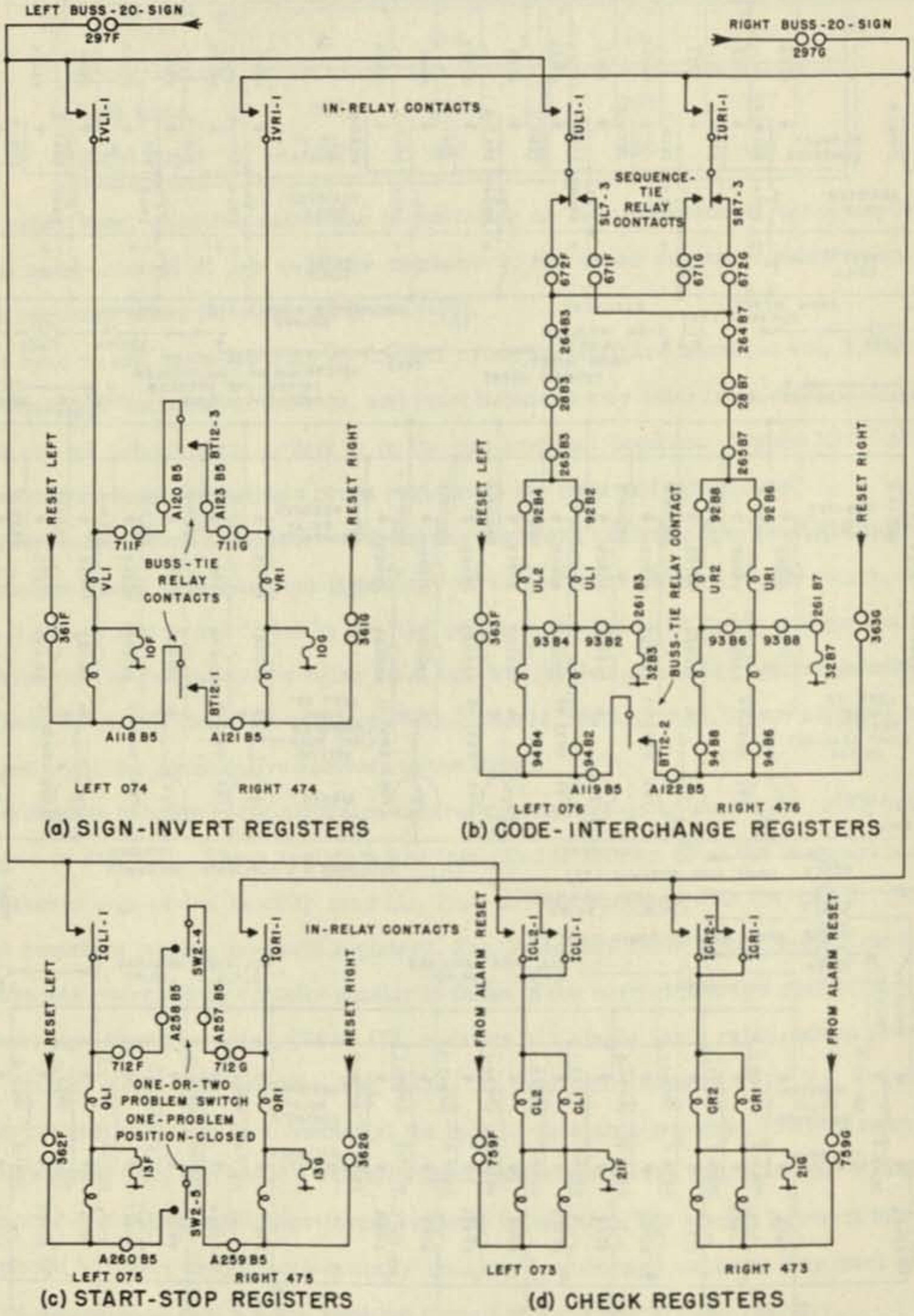

(a) SIGN-INVERT REGISTERS

(b) CODE-INTERCHANGE REGISTERS

(c) START-STOP REGISTERS

(d) CHECK REGISTERS

Fig. 3.11 - Sign-control registers.

will become the next higher odd code, while an odd code becomes the next lower even code. If the quantity b is positive, operation-code 76 has no effect.

Registers 075 and 475, the start-stop registers, each consist of a single latch relay, Fig. 3.11c, whose contacts will be found in the start and stop circuits of the sequence units. If the condition is met that the quantity c standing in the start-stop register is positive, the conditional start and stop codes, 70 and 74, respectively, take effect at the end of the cycle in which they are coded. If the control quantity c is negative, these operation-codes have no effect.

In order to insure the proper functioning of the check registers, 073 and 473, they have been constructed in duplicate. Each consists of two latch relays whose coils are connected in parallel, and each has two in-relays. Contacts of each in-relay are connected in parallel to form the read-in circuits, Fig. 3.11d. If a quantity read into a check register is negative, the calculator will be stopped, a red light will be lighted, and an alarm bell will ring. The check registers provide a means of mathematically checking the computation in progress at all times, thus insuring the validity of the final results.

PROBLEM______ TAPE______ SECOND______

LINE	FORMULA	SIGN	OUT	IN	OPER.
				AUGEND	
12					
13	a from S.R. 001 to Transfer R.		001	TRANSFER	
14	a from Transfer R. to S.R. 061		TRANSFER	061	57
15				TRANSFER	
16	Prepare to read out 2a or 5a		TRANSFER		43
17	2a from S.R. 061 to Transfer R.		121	TRANSFER	
18	2a from Transfer R. to S.R. 002		TRANSFER	002	
19				AUGEND	
20	Prepare to read out 2a or 5a			ADDEND	43
21	5a from S.R. 061 to Transfer R.		122	TRANSFER	
22	5a from Transfer R. to S.R. 003		TRANSFER	003	
			PRODUCT I		
29					
30			SUM		

Fig. 3.12 - Coding for register 061.

The sign-control registers so far have been discussed for the case of the machine under control of two sequence mechanisms. The discussion of these registers for the case of the entire machine under the control of one sequence mechanism will be reserved for Chapter VI. The manipulation of control quantities made possible by the sign-control registers greatly increases the flexibility of the machine. The use of these registers will be illustrated in detail in the course of the solution of typical examples in Chapter XI.

Certain storage registers, called functional registers, are equipped with sensing and control circuits governed by operation-codes. A functional register may operate either as a normal storage register or as a component of the particular input, output, or functional unit with which it is associated. In general, these registers will be described in connection with their related units. However, since registers 061 and 461, supplying the two and five multiples of any quantity, are frequently employed as independent components and illustrate the types of circuits adjoined to the functional registers, they will be discussed here.

Let it be assumed that the quantity y stands in storage register 001 and that it is desired to obtain either $2y$, or $5y$, or both, on the left side of the machine. The coding proceeds in two steps. First, y is transferred to register 061 accompanied by operation-code 57. Second, if $2y$ is to be read out, operation-code 43 and out-code (121) are entered on successive lines; if $5y$ is to be transferred, operation-code 43 and out-code (122) are used on neighboring lines, Fig. 3.12. For each desired read-out of $2y$ or $5y$, the out-code (121) or (122) must be immediately preceded by operation-code 43.

At the same time that the quantity y is read into register 061, impulses supplied through the operation-pyramid, under control of operation-code 57, energize certain auxiliary in-relays, Fig. 3.13. Then a circuit through the contacts of these auxiliary in-relays positions latch relays duplicating the representation of the exponent and tenth columnar digit of the quantity y, Fig. 3.14. Figure 3.15 shows the timing of these operations beginning with line 14 of the coding form, Fig. 3.12.

The operation-code 43, entered on line 16 of the coding form, causes certain shift-pick-up relays to be energized, Fig. 3.16a, in preparation for the read-out of the required multiple. The shift-pick-up relays, XD1 through XD4, indicate carry into machine column 11. Relays XD1 and XD3 are energized if the digit standing in column 10 of register 061 is equal to or greater than five;

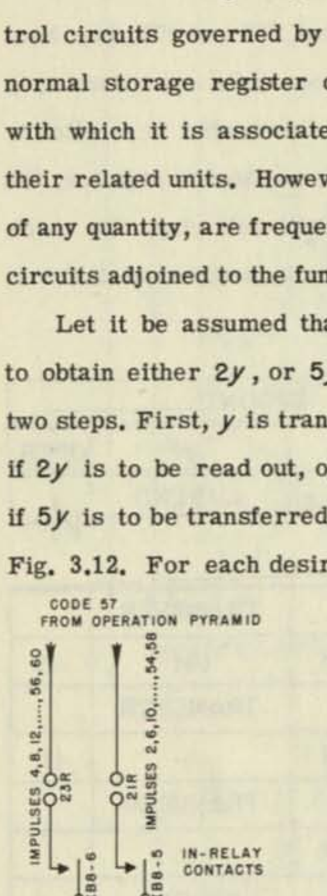

Fig. 3.13 - Register 061, auxiliary in-relays.

relays XD2 and XD4 are energized if the digit is less than five but equal to or greater than two. Through contacts of the shift-pick-up relays, the shift relays themselves and the "add-one" relay are energized if carry into column 11 is indicated, Fig. 3.16b. It should be noted that this circuit energizes the shift and add-one relays automatically if the digit in column 10 is five or more, but only under control of out-code (122) if the digit is less than five and equal to or greater than two.

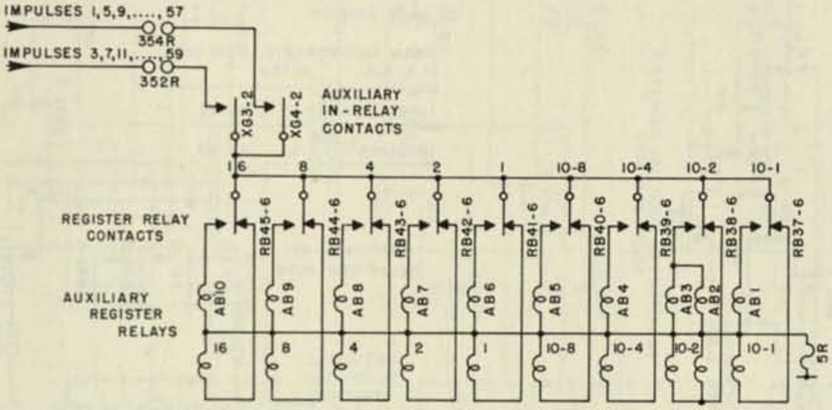

Fig. 3.14 - Register 061, auxiliary register relays.

Out-code (121) causes the times-two out-relay L1-L8 to be closed. Two circuits are then completed. The first conducts an impulse through the times-two read-out of columns 1-10, through the times-two out-relay contacts, Fig. 3.17a, through the shift circuit, Fig. 3.16c, to the buss. The second circuit sends an impulse through the "add-one-or-zero" circuit, Fig. 3.16d, to correct the exponent if a shift is required, and transfers the corrected exponent through the times-two out-relay contacts to the buss.

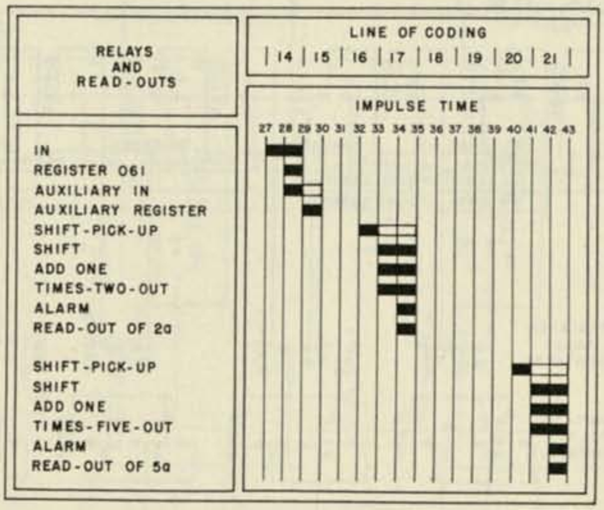

Fig. 3.15 - Timing of relays associated with register 061.

Out-code (122) will cause the times-five out-relay, M1-M8, to be closed. Again two circuits are completed to the buss. The first conducts an impulse through the times-five read-out of columns 1-10, through the times-five out-relay contacts, Fig. 3.17b, through the shift circuit, Fig. 3.16c, to the buss. The second circuit sends an impulse through the add-one-or-zero circuit, Fig. 3.16d, to deliver the corrected exponent through times-five out-relay contacts to the buss.

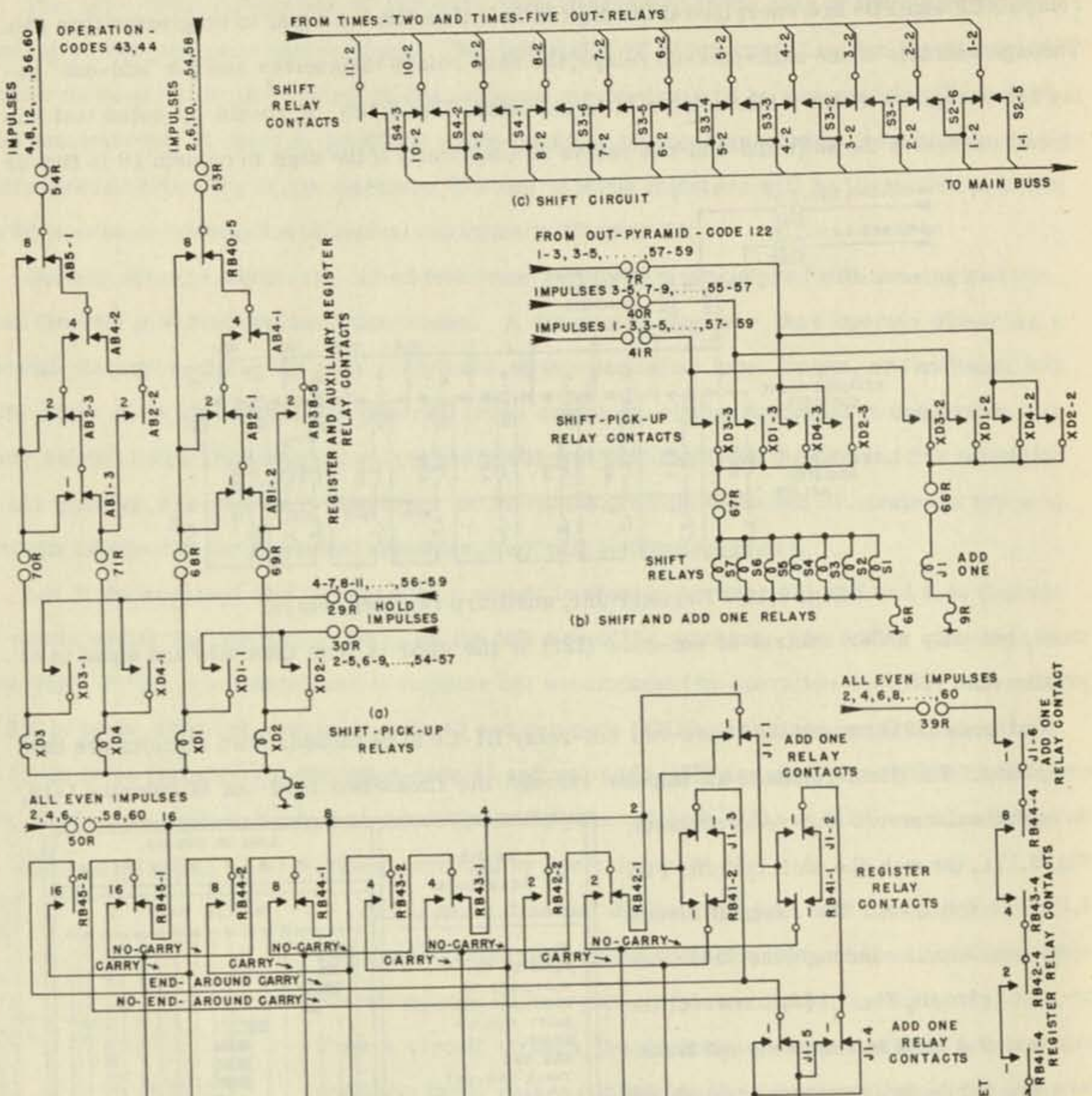

Fig. 3.16 - Circuits related to register 061.

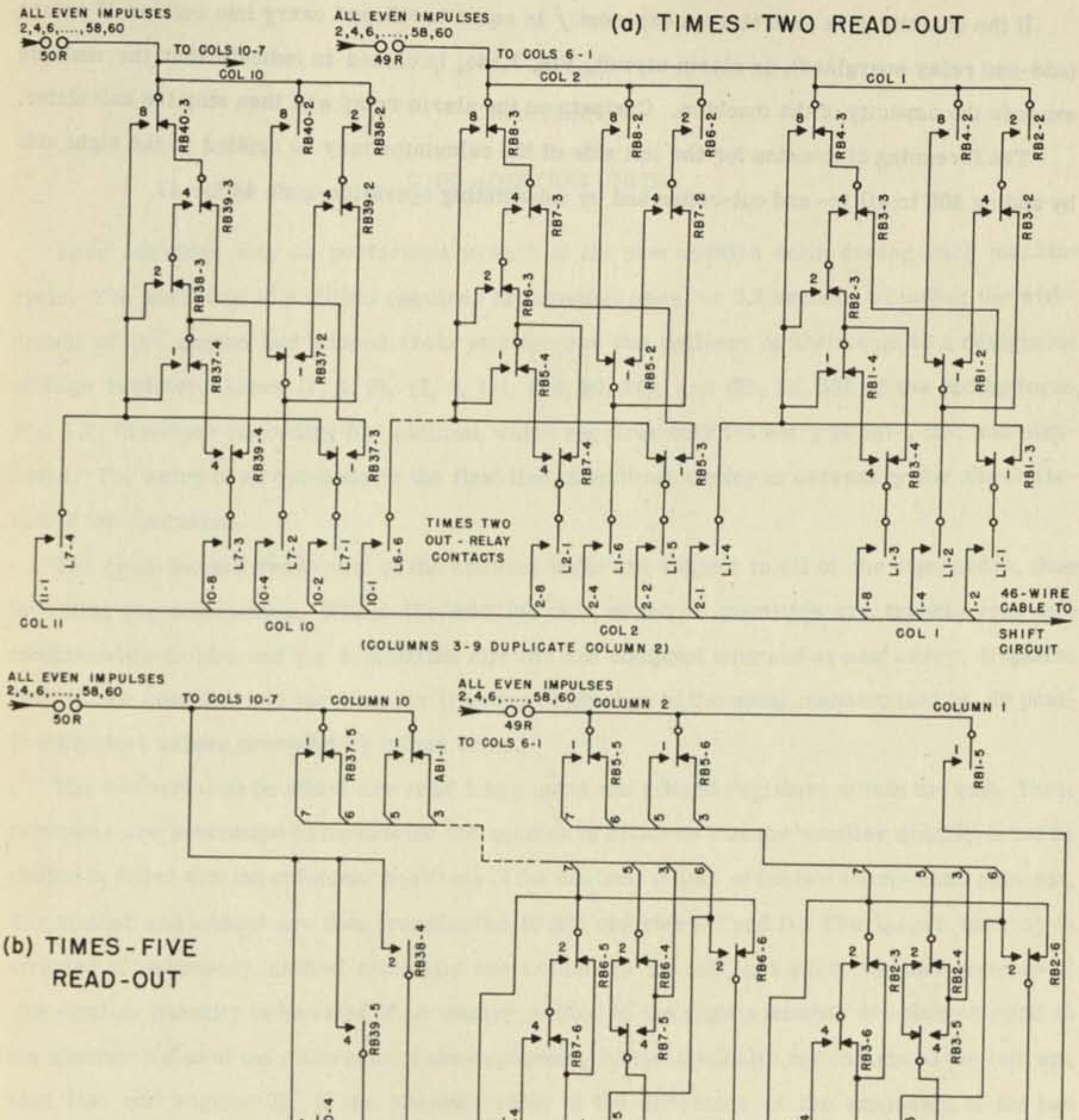

Fig. 3.17 - Times-two- and times-five-read-outs.

If the quantity y is such that its exponent j is equal to $+15$, and carry into column 11 occurs (add-one relay energized), an alarm circuit, Fig. 3.16e, is closed to indicate that the multiple exceeds the capacity of the machine. Contacts on the alarm relay will then stop the calculator.

The foregoing discussion for the left side of the calculator may be applied to the right side by adding 400 to all in- and out-codes and by substituting operation-code 44 for 43.

CHAPTER IV

THE ADDITION UNITS

Four additions may be performed in each of the two addition units during each machine cycle. The operation of addition requires 12 impulse times, or 0.2 second, including the withdrawal of the augend and addend from storage and the delivery of their sum to a designated storage register. Lines (1, 2, 6), (7, 8, 12), (19, 20, 24), and (25, 26, 30) of the coding form, Fig. 1.2, illustrate the coding for addition, which requires only the entry of out-, in-, and sign-codes. The entry of an out-code in the first line of addition coding is necessary for the initiation of the operation.

The read-ins and read-outs of the addition units are subject to all of the sign-codes, thus providing for subtraction. Within the addition unit, negative quantities are transformed into complements on nine and the summation circuits are equipped with end around carry. Negative results are read out into the buss for transfer to storage in the usual manner; that is, as positive absolute values preceded by minus signs.

The two terms to be added are read into augend and addend registers within the unit. Their exponents are subtracted to determine the number of columns that the smaller quantity must be shifted in order that the columnar positions of the decimal points of the two terms shall coincide. The augend and addend are then transferred to add registers C and D. The larger quantity is inverted if necessary, shifted statically one column to the left, and read into add register C. The smaller quantity is inverted if necessary, shifted to the right a number of columns equal to the absolute value of the difference of the exponents, shifted statically one column to the left, and read into add register D. If the absolute value of the difference of the exponents of the two terms calls for a shift of more than eleven columns, zero is substituted for the lesser quantity. Throughout the calculator, zero is represented by plus zero with a zero exponent; that is, all relays of a register in the de-energized position. The use of eleven columns in the add registers allows one extra column of the smaller term to be carried throughout the summation to be used in determining the round-off of the sum, and necessitates the use of twelve columns in the sum-without-carry and carry circuits.

After the adding operation has been performed, the sum is shifted on reading out so that the first non-zero digit appears in the tenth machine column. The exponent of the sum is then corrected both for the one column static shift left into add registers C and D, and for the out-

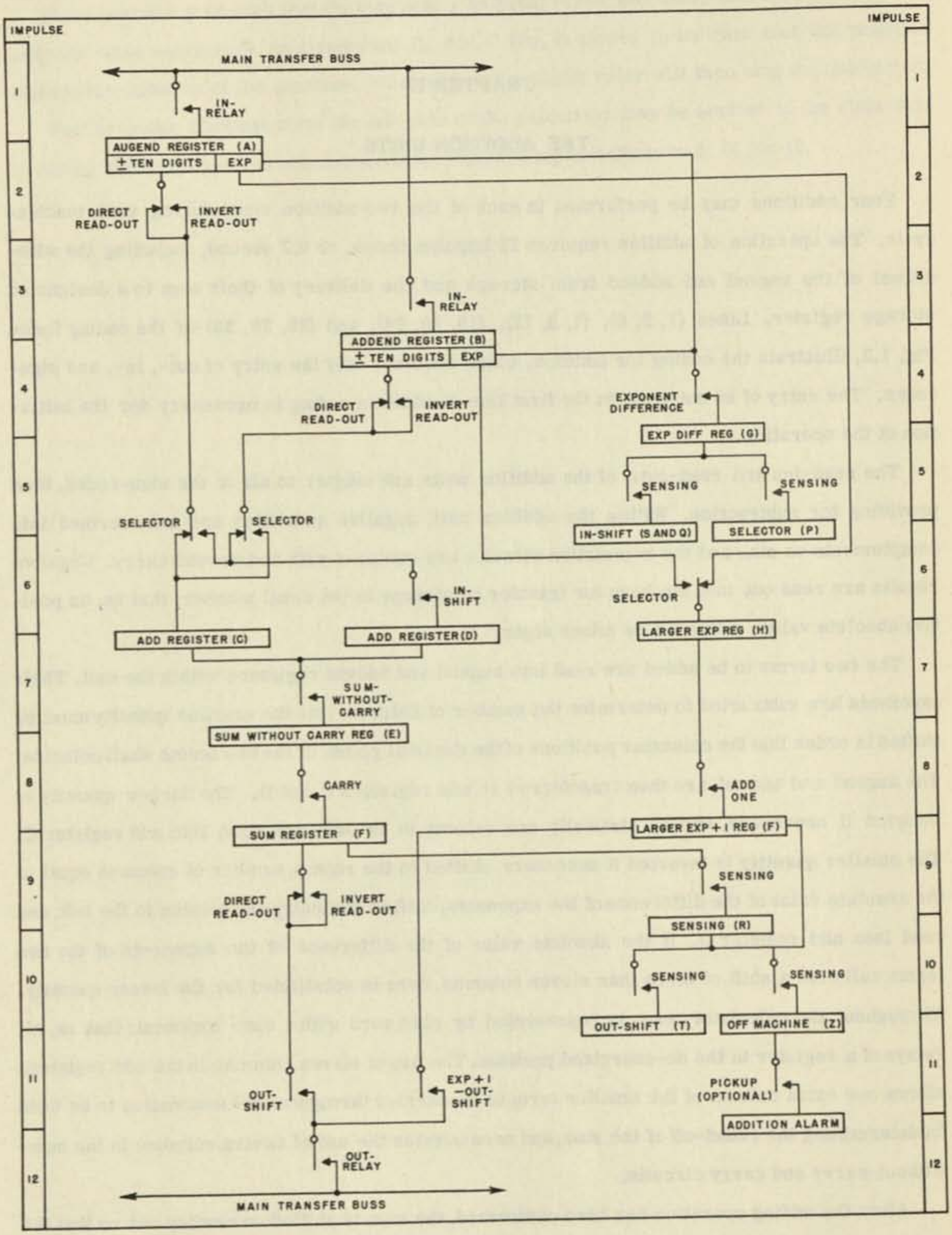

Fig. 4.1 - Addition unit.

shift. If this correction produces an exponent greater than +15 or less than −15, one of two alarm circuits is closed and the machine is stopped. However, either of the alarm circuits, for exponent too large or too small, may be cut off by toggle switches mounted at the bottom of the main control panel. For example, if very small differences approximating zero are anticipated, the alarm circuit for exponents less than −15 may be interrupted.

The block diagram, Fig. 4.1, shows impulse by impulse, the operation of the addition units. The addition timing shown is that of the first adding operation in a cycle. The coils of each register and of each group of relays are represented by blocks placed opposite the impulse time at which the register or group of relays is energized. Each circuit is represented by a single relay contact. All of the registers and groups of relays employed in an addition unit, their characteristics and purposes, are tabulated in Fig. 4.2.

If an augend x is equal to $+9.7458\ 23856 \times 10^{-1}$ and lies in storage register 014, and if an addend y is equal to $+8.9324\ 34884 \times 10^{2}$ and lies in storage register 035, lines 1, 2, and 6 of Fig. 1.2 show the coding required to deliver the sum $x+y$ to storage register 021 using the first adding operation possible in any cycle. Figure 4.3 shows the number transfers which take place within the unit for this numerical example.

The operation of the addition unit is controlled by three addition sequence relays, M1, M2, and N1. The M-relays are energized, Fig. 4.4, if, and only if, the augend in-relay is energized. The augend in-relay is energized through contacts on the out-pyramid relays, thus requiring an out-code in the first line of addition coding for the initiation of the operation. The M-relay contacts connect the cam-controlled contacts, Fig. 4.5, to the various circuits of the addition unit and control the pick-up of the N-relay, Fig. 4.4, which serves a similar purpose. The impulse times during which the various registers are energized by the cam-controlled contacts are shown in Fig. 4.6, where a pick-up impulse is represented by a solid bar and a hold impulse by a clear bar.

The following detailed description of the process of addition will be based on the numerical example of Fig. 4.3, and the timing shown in Fig. 4.6 for the first adding operation of a cycle. This pattern of impulses is repeated for the remaining three additions during impulses 13-24, 37-48, and 49-60 of each cycle.

Impulse 1. (a and b) Contacts of the out-pyramid relays energized by the out-code (014) complete circuits to energize the storage register 014 out-relay (cf. Fig. 3.1) and the augend in-relay, I1-I8.

Impulse 2. (a) Through contact I8-6 of the augend in-relay, the addition sequence relays M1 and M2 are energized, Fig. 4.4.

Relays	Name of Relays	Type*	Impulses		Energizing Circuit	Purpose
			P-U	Hold		
I1-I8	Augend in-relay	S	1-3	--	out-pyramid relay contacts	connect transfer buss to augend register
M1-M2	Addition sequence relays	D	2	1-10	I8-6	connect cam-controlled contacts to circuits
A1-A40	Augend register	D	2	2-10	storage register and I1-I7	store augend and provide invert circuits
A41	Augend sign relay	D	2	2-10	storage register and I7-5	store augend and provide invert circuits
A42-A47	Augend exponent register	D	2	2-10	storage register and I7-I8	provide exponent difference and larger exponent circuits
J1-J8	Addend in-relay	S	3-5	--	M1-2	connect transfer buss to addend register
B1-B40	Addend register	D	4	2-10	storage register and J1-J7	store addend and provide invert circuit
B41	Addend sign relay	D	4	2-10	storage register and J7-5	store addend and provide invert circuit
B42-B47	Addend exponent register	D	4	2-10	storage register and J7-J8	provide exponent difference and larger exponent circuits
G1-G6	Exponent difference register	D	5	2-10	A42-A47 and B42-B47	stores difference (augend-addend) of exponents and provides pick-up circuits for selector and in-shift relays
P1-P15	Selector relays	S	6	6-10	if augend < addend; G6, A37-A40 and B37-B40	provides circuit to route smaller term through in-shift circuit to add register D, larger term to add register C
Q1	Shift twelve or more	S	6	2-10	if | exponent difference |>11; G1-G6	prevents read-in to add register D
S1-S32	In-shift relays	S	6	2-10	G1-G6	provides shift circuit reading smaller term to add register D

*S=single coil, D=double coil, L=latch type

Fig. 4.2 - Addition unit, registers and groups of relays.

Relays	Name of Relays	Type*	Impulses		Energizing Circuit	Purpose
			P-U	Hold		
N1	Addition sequence relay	D	7	7-13	M1-6	connects cam-controlled contacts to circuits
C4-C45	Add register C	S	7-10	--	A1-A41 or B1-B41 and P1-P14	stores larger term and provides sum-without-carry and carry circuits
D1-D45	Add register D	S	7-10	--	A1-A41 or B1-B41 and P1-P14	stores smaller term and provides sum-without-carry and carry circuits
H1-H5	Larger exponent register	D	7	1-10	A42-A47, B42-B47 and P15	stores larger exponent and provides add-one circuit
E1-E68	Sum-without-carry register	D	8	8-10	C4-C45 and D1-D45	stores sum-without-carry and nine's and ten's carry and provides carry circuit
F1-F46	Sum register	D	9	9-13	C4-C45, D1-D45 and E1-E68	stores sum and provides pick-up circuit for sensing relays and sum invert circuit
F47-F55	Sum register (larger exponent plus one)	D	9	7-13	H1-H5	provides circuit to read out larger exponent plus one minus out-shift
R1-R11	Sensing relays	S	10-13	--	F1-F46	provide circuits to pick-up out-shift and alarm relays
T1-T36	Out-shift relays	S	11-13	--	R1-R11 and F45-F46	provide out-shift circuit and circuit to correct exponent
Z1-Z2	Off machine relays	S	11-13	--	Z1 if exp $>+15$, Z2 if exp <-15; R1-R11 and F45-F55	prevent read-out of sum and sum exponent
AA1	Addition alarm relay	L	12	--	Z1 and Z2	picks up main machine alarm and lights red light
O1-O9	Sum out-relay	S	11-13	--	N1-4	connects sum register to transfer buss

* S=single coil, D=double coil, L=latch type

Fig. 4.2 continued - Addition unit, registers and groups of relays.

IMPULSE	REGISTER	SIGN	DECIMAL COLUMNS												EXPONENT							PURPOSE
		20	12	11	10	9	8	7	6	5	4	3	2	1	32	16	8	4	2	1		
2	AUGEND REGISTER (A)	+			9	7	4	5	8	2	3	8	5	6		1	1	1	1	0	= -1	
4	ADDEND REGISTER (B)	+			8	9	3	2	4	3	4	8	8	4		0	0	0	1	0	= 2	
5	EXPONENT DIFFERENCE REGISTER (G)														1	1	1	1	0	0	= -3	ENERGIZE SELECTOR RELAYS (P) AND IN-SHIFT 1 AND 2 RELAYS (S)
7	ADD REGISTER (C) RECEIVES ADDEND VIA DIRECT READ-OUT AND SELECTOR CIRCUIT	+		8	9	3	2	4	3	4	8	8	4	0								
	ADD REGISTER (D) RECEIVES AUGEND VIA DIRECT READ-OUT, SELECTOR, AND IN-SHIFT CIRCUITS.	+		0	0	0	9	7	4	5	8	2	3	8								
	LARGER EXPONENT REGISTER (H)															0	0	0	1	0	= 2	
8	SUM-WITHOUT-CARRY REGISTER (E)	+		8	8	2	0	0	6	8	6	0	6	8								
	NINE'S CARRY				✓					✓												
	TEN'S CARRY						✓	✓			✓	✓										
	"ONE'S"				1	1	1	1	1	1			1									
9	SUM REGISTER (F) AND LARGER-EXPONENT-PLUS-ONE (F)	+	0	8	9	4	2	1	8	0	7	0	7	8	0	0	0	0	1	1	= 3	ENERGIZE SENSING (R) AND OUT-SHIFT 1 (T) RELAYS
12	READ-OUT TO TRANSFER BUSS VIA DIRECT READ-OUT AND OUT-SHIFT CIRCUIT	+			8	9	4	2	1	8	0	7	0	7		0	0	0	1	0	= 2	READ-OUT OF EXPONENT VIA LARGER EXPONENT PLUS ONE MINUS OUT-SHIFT

Fig. 4.3 - Example of addition.

(b) The augend is transferred from storage register 014, through the storage register out-relay contacts to the main buss, through the augend in-relay contacts to the augend register, A1-A47, Fig. 4.7. The augend register relays remain energized by virtue of their hold circuits until 10-time; that is, until the beginning of the tenth impulse.

Impulse 3. (a) An impulse passes through the out-pyramid as set up by out-code (035) to energize the out-relay of storage register 035.

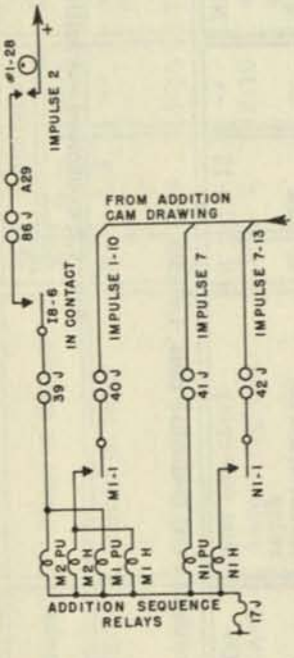

Fig. 4.4 - Sequence relays.

(b) The addend in-relay, J1-J8, is energized through contact M1-2 of the addition sequence relays.

Impulse 4. (a) The addend is transferred from storage register 035 through the storage register out-relay contacts to the main buss, through the addend in-relay contacts to the addend register, B1-B47. The addend register relays remain energized by virtue of their hold circuits until 10-time.

Impulse 5. (a) The exponent difference circuit, a binary subtraction circuit, Fig. 4.8, subtracts the exponent of the addend from the exponent of the augend. This circuit is composed of contacts of the augend and addend exponent register relays. The difference is stored in the exponent difference register, G1-G6. In the numerical example of Fig. 4.3, the exponent difference is −3, indicating a three column shift of the augend to the right.

Impulse 6. (a) The selector relays, P1-P15, are energized,

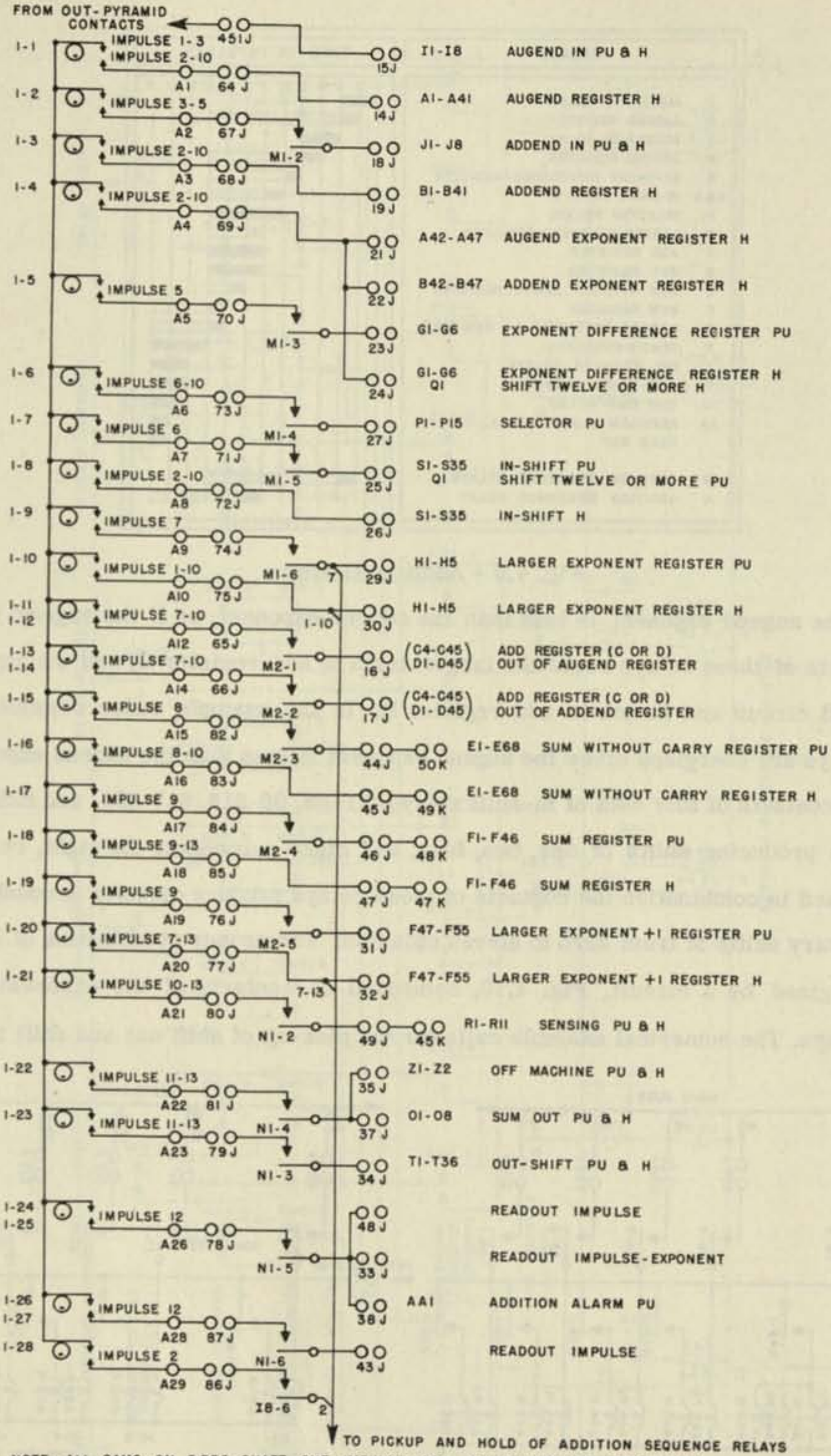

NOTE: ALL CAMS ON 5 RPS SHAFT. ONE IMPULSE = 30°, 12 IMPULSES PER REVOLUTION.

Fig. 4.5 - Cam-controlled contacts employed in addition circuit.

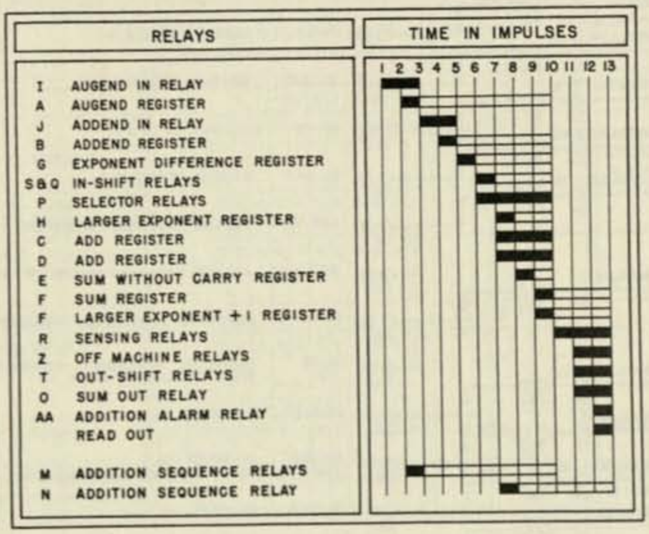

Fig. 4.6 - Addition timing.

Fig. 4.9, if the augend exponent is less than the addend exponent, or if the augend is equal to zero. Contacts of these relays route the larger term to add register C, and the smaller term to the in-shift circuit and thence to add register D. In the example under consideration, the selector relays are energized since the augend exponent is less than the addend exponent.

(b) The contacts of four sets of in-shift relays, S1-S8, S9-S16, S17-S24, and S25-S32, provide circuits producing shifts of one, two, four, and eight columns to the right, respectively. Thus singly and in combination the contacts of these relays produce circuits accounting for all of the necessary shifts of from zero to eleven columns. The proper combination of in-shift relays is energized by a circuit, Fig. 4.10, composed of contacts of the exponent difference register relays. The numerical example calls for the pick-up of shift one and shift two.

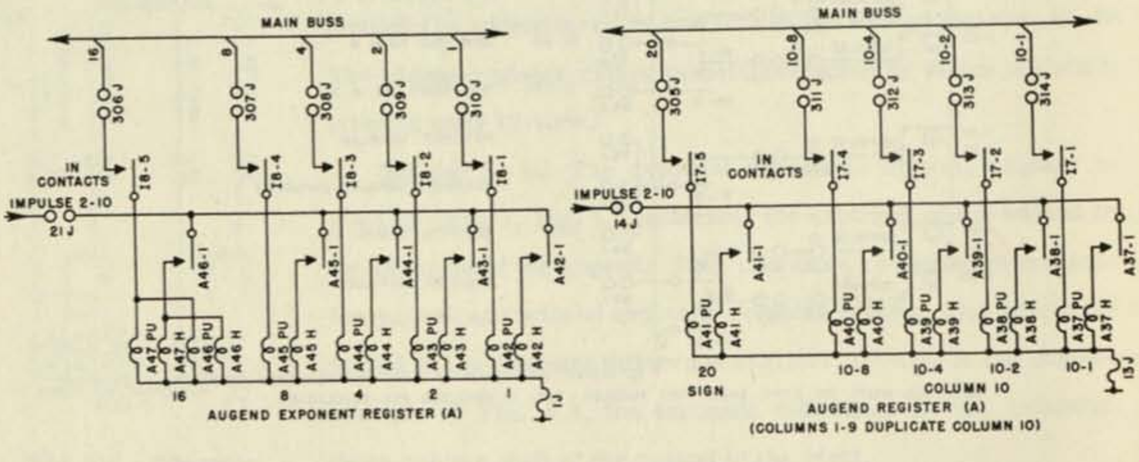

Fig. 4.7 - Read-in to augend register.

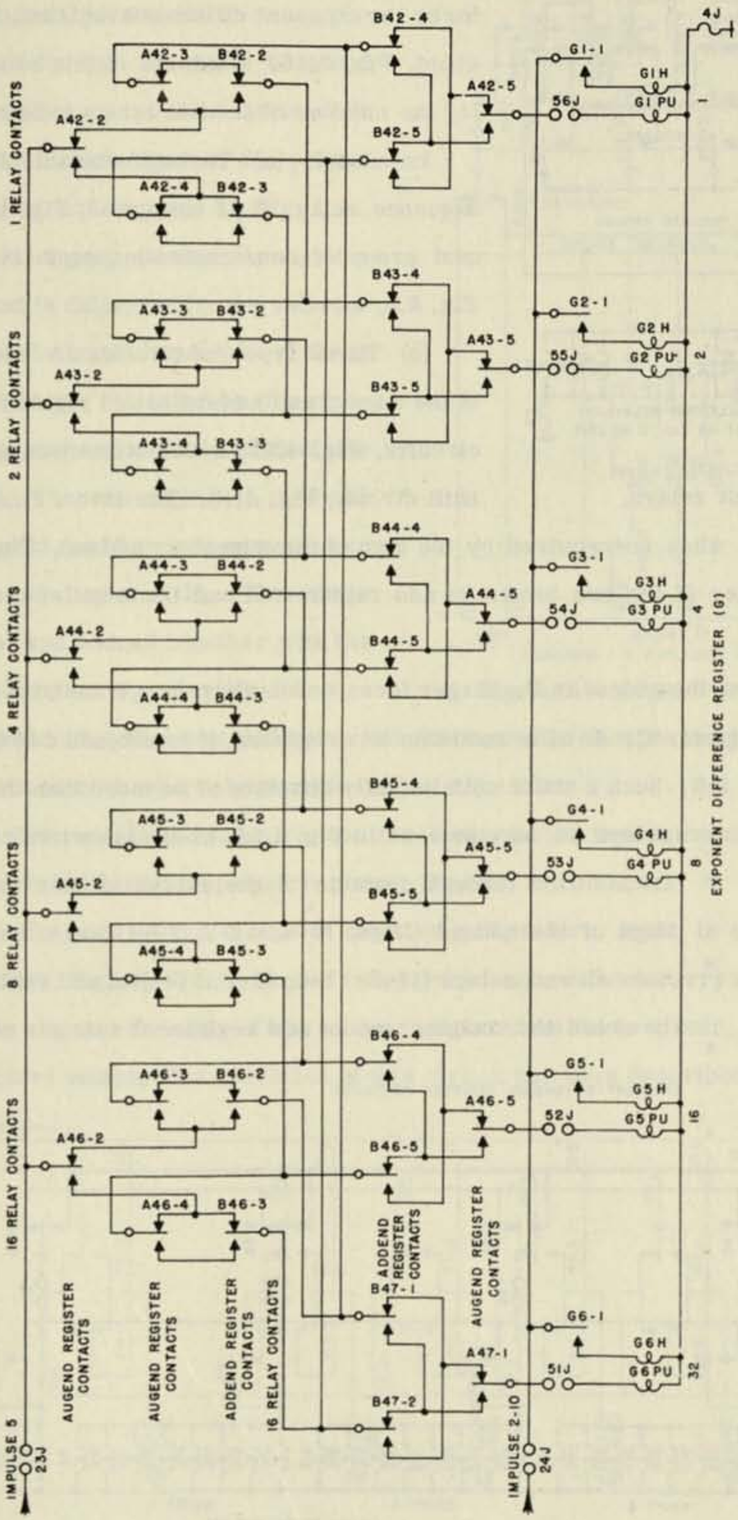

Fig. 4.8 - Exponent difference circuit.

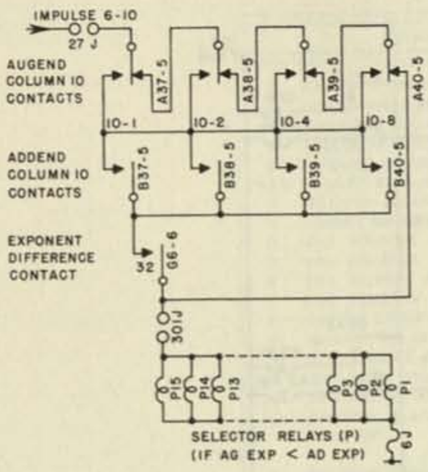

Fig. 4.9 - Pick-up of selector relays.

(c) If a shift of twelve or more columns is called for by the exponent difference register, relay Q1 is energized, Fig. 4.10. Contacts of this relay substitute zero for the smaller of the two terms to be added.

Impulse 7. (a) Through contact M1-6, the addition sequence relay N1 is energized, Fig. 4.4, to connect the next group of cam-controlled contacts to the circuits, Fig. 4.5.

(b) Three types of circuits are used in the transfer of the augend and addend to add registers C and D; invert circuits, Fig. 4.11; a selector circuit, Fig. 4.12; and a shift circuit, Fig. 4.13. The invert circuits supply complements on nine when so required by the sign of the augend or addend. The selector circuit delivers the larger of the two terms to add register C and the smaller term to the in-shift circuit.

In the example, the addend is the larger term, and is therefore transmitted by the selector circuit to add register C. As it is read into this register, it is subjected to a "static shift" of one column to the left. Such a static shift actually consists of no more than the labeling of the relays as may be seen in Fig. 4.14, where the wires carrying impulses transmitted through contacts of the relays storing the tenth columnar digit of the addend (10-8, 10-4, 10-2, 10-1) are connected to the column eleven relays (11-8, 11-4, 11-2, 11-1) of add register C. It should be noted that column one of add register C consists of but one relay, a

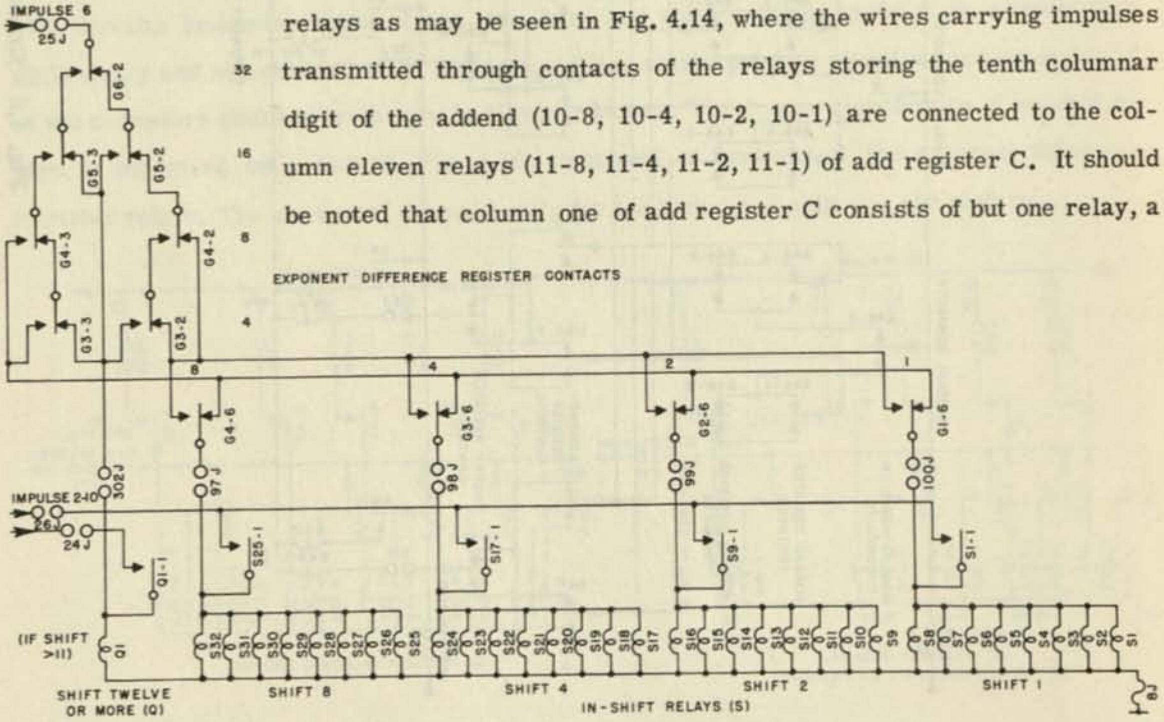

Fig. 4.10 - Pick-up of in-shift relays.

9 - relay which is energized only if the quantity read into add register C is negative.

The smaller of the two terms to be added is routed by the selector circuit to the in-shift circuit, Fig. 4.13, which places it in the proper columnar position in add register D, Fig. 4.14. In the example, the augend passes through the direct read-out and is delivered by the selector circuit to the in-shift circuit for a shift of three columns to the right (as indicated by the exponent difference register) and a static shift of one column to the left. Thus the digit 9 in the tenth column of the augend register is transmitted to column eight of add register D. The static shifts of the augend and addend together with the add-one circuit, Impulse 9, simplify the out-shift circuit, Impulse 12. The simplification results from the fact that under these circumstances the out-shift circuit need only provide shifts to the left.

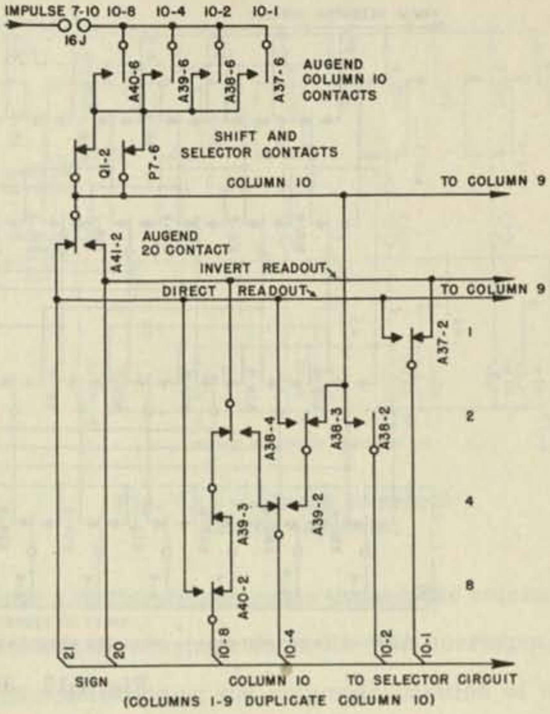

Fig. 4.11 - Augend invert circuit.

(c) Contacts of the selector relays choose the larger of the two exponents, Fig. 4.15, and store this exponent in the larger exponent register, H1-H5.

Impulse 8. (a) Contacts of the C and D register relays form what is called the "sum-without-carry" circuit, Fig. 4.16, to energize relays of the sum-without-carry register, E1-E68. Each column of this register consists of six relays designated as the two, four, six, eight, nine's carry, and ten's carry relays. The operation of this circuit has been described on pages 45-47.

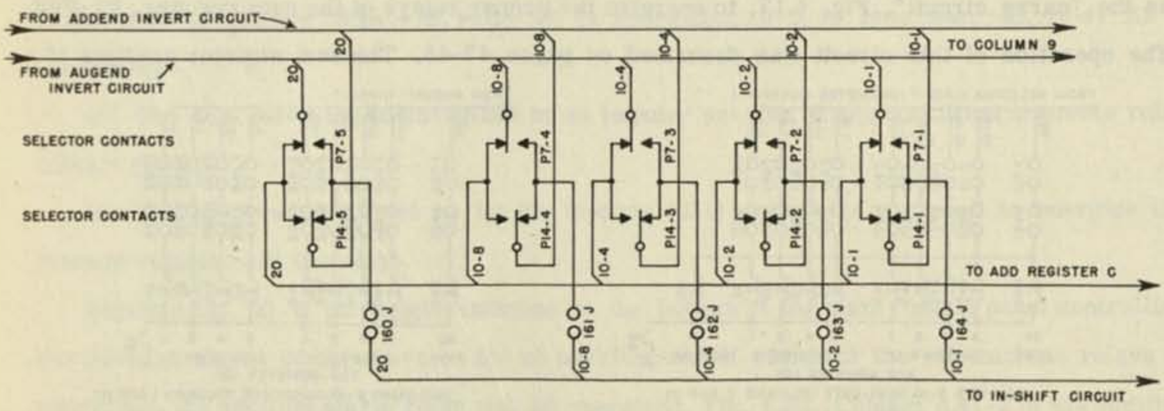

Fig. 4.12 - Selector circuit.

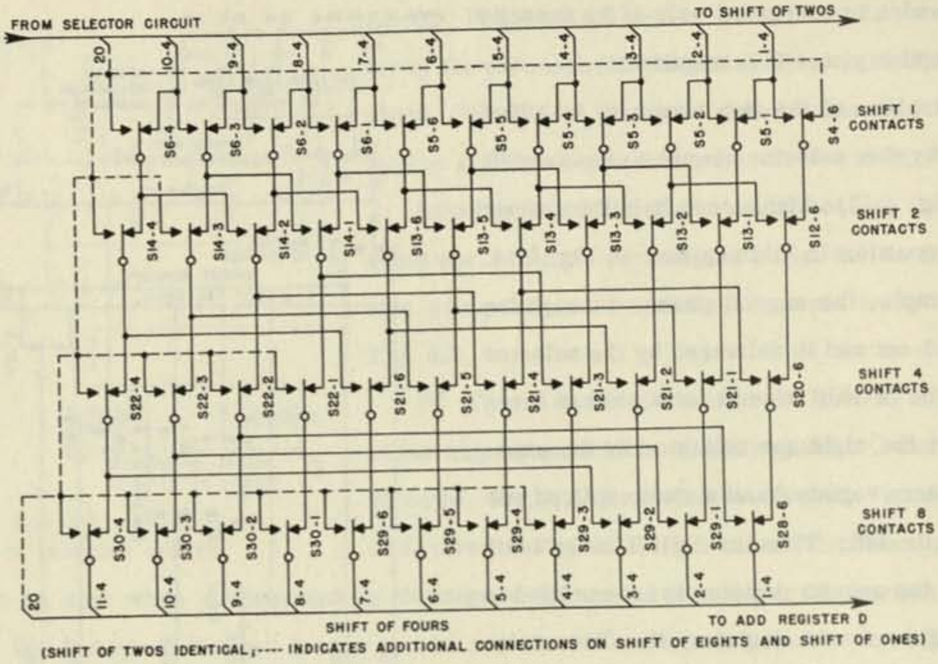

Fig. 4.13 - In-shift circuits.

The circuits for columns one and twenty differ from those of the remaining columns. Column one differs in that add register C may contain only a zero or a nine in the first column. Column twenty of the E-register consists of but two relays, E67 and E68. Since a plus sign is considered as a zero and a minus sign as a nine when using complements on nine, augend and addend both positive will energize neither relay, one positive and one negative will energize the nine's carry relay, and both negative will pick up the ten's carry relay. Contacts on these two relays control the transmission of the algebraic sign and the transmission of end around carry in the subsequent carry circuit.

Impulse 9. (a) Contacts on the C, D, and E register relays combine to form what is known as the "carry circuit", Fig. 4.17, to energize the proper relays of the sum register, F1-F46. The operation of this circuit was described on pages 47-48. The sum register consists of a

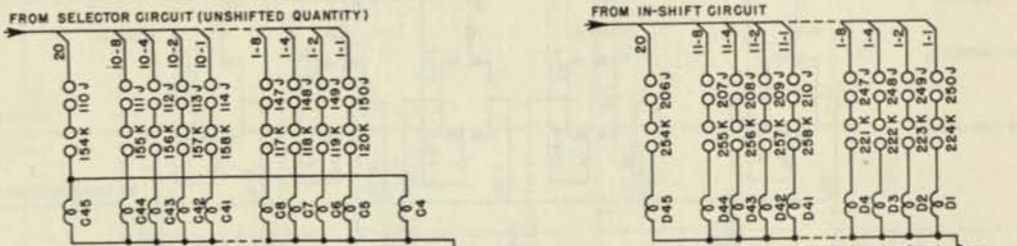

Fig. 4.14 - Read-ins to add registers C and D

sign column and twelve digit columns. Column one differs only insofar as C4 representing a nine replaces a C-relay representing a one. Column twelve stores only a zero or a one, which may arise as carry from column eleven.

(b) A one is added to the larger exponent in order to simplify the circuits transforming the larger exponent into the exponent of the sum. This add-one circuit, Fig. 4.18, is a binary addition circuit and stores the result in relays of the sum register, F47-F55.

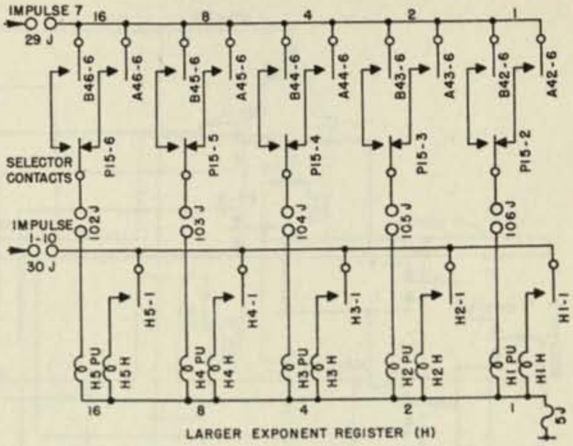

Fig. 4.15 - Circuit to select larger exponent.

Impulse 10. (a) An impulse through a sensing circuit, Fig. 4.19, formed of contacts on the sum register relays reads through the columns of the sum register containing zeros (or nines) to energize sensing relays, R1-R11, corresponding to each column containing a zero (or nine), thus determining the columnar position of the first non-zero digit of the sum.

Impulse 11. (a) There are four sets of out-shift relays, T1-T9, T10-T18, T19-T27, and T28-T36, corresponding to shifts left of one, two, four, and eight columns, respectively. These are energized singly or in combination by a circuit through the sensing relay contacts, Fig. 4.20, to provide the shift necessary to read the highest non-zero digit of the sum to the twelfth machine column.

(b) Contacts of the relays storing the larger exponent plus one, F47-F55, and of the sensing relays are combined to form a circuit, Fig. 4.21, to energize one of the off-machine relays, Z1-Z2, if the sum falls either above or below the machine capacity. If the corrected exponent of the sum is greater than +15, relay Z1 is energized; if it is less than −15, relay Z2 is energized.

(c) The sum out-relay is energized by an impulse passing through addition sequence relay contact N1-4.

(d) The in-pyramid as set up by the in-code (021) completes a circuit to energize the storage register 021 in-relay.

Impulse 12. (a) If the toggle switches at the bottom of the main control panel controlling the addition alarm circuits are in the on position, and if either of the off-machine relays is energized, the addition alarm relay will be energized, Fig. 4.22. Contact AA1-2 of the addition alarm relay closes a 110-volt a.c. circuit to light a red light at the top of the main control

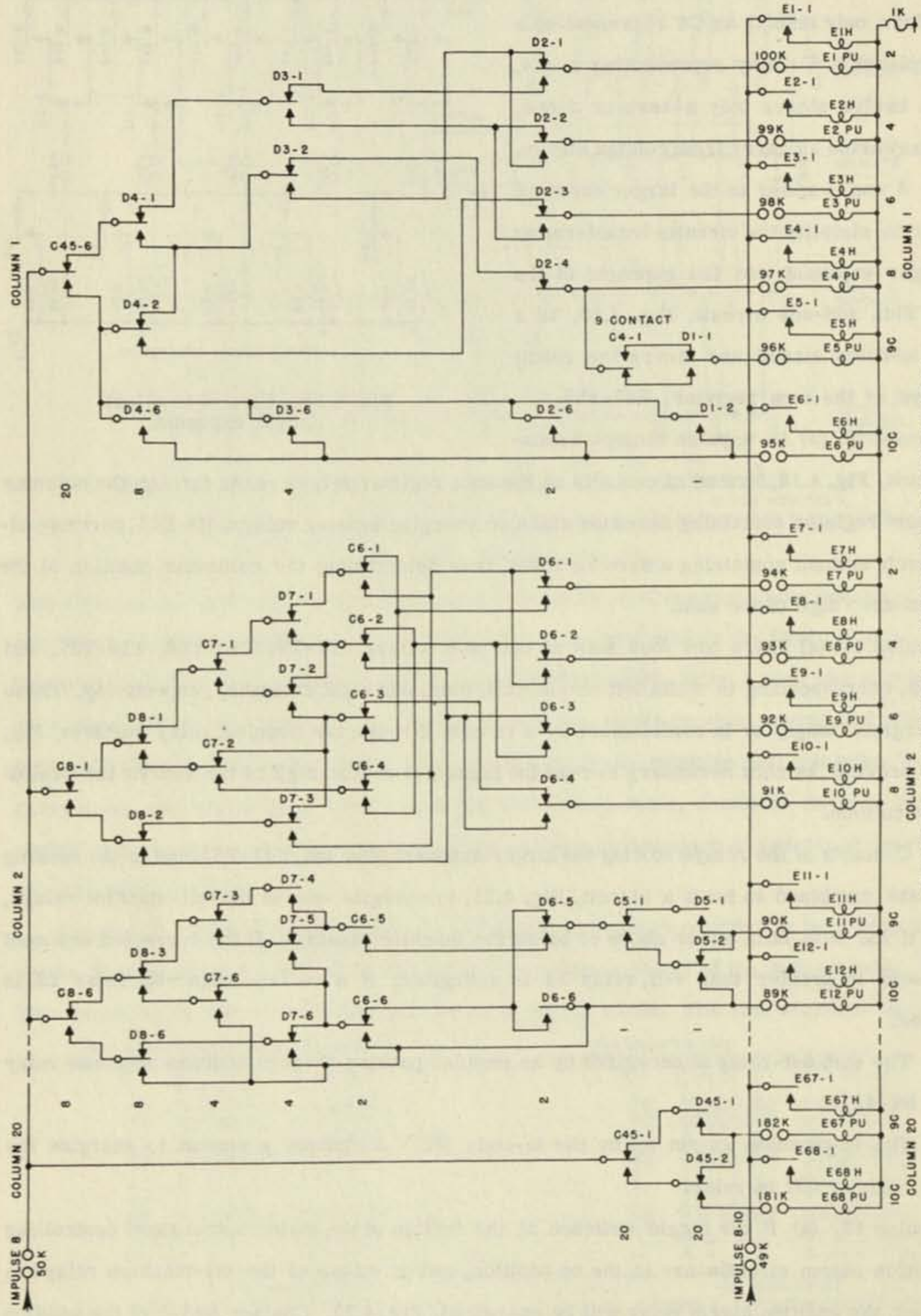

Fig. 4.16 - Sum-without-carry circuit.

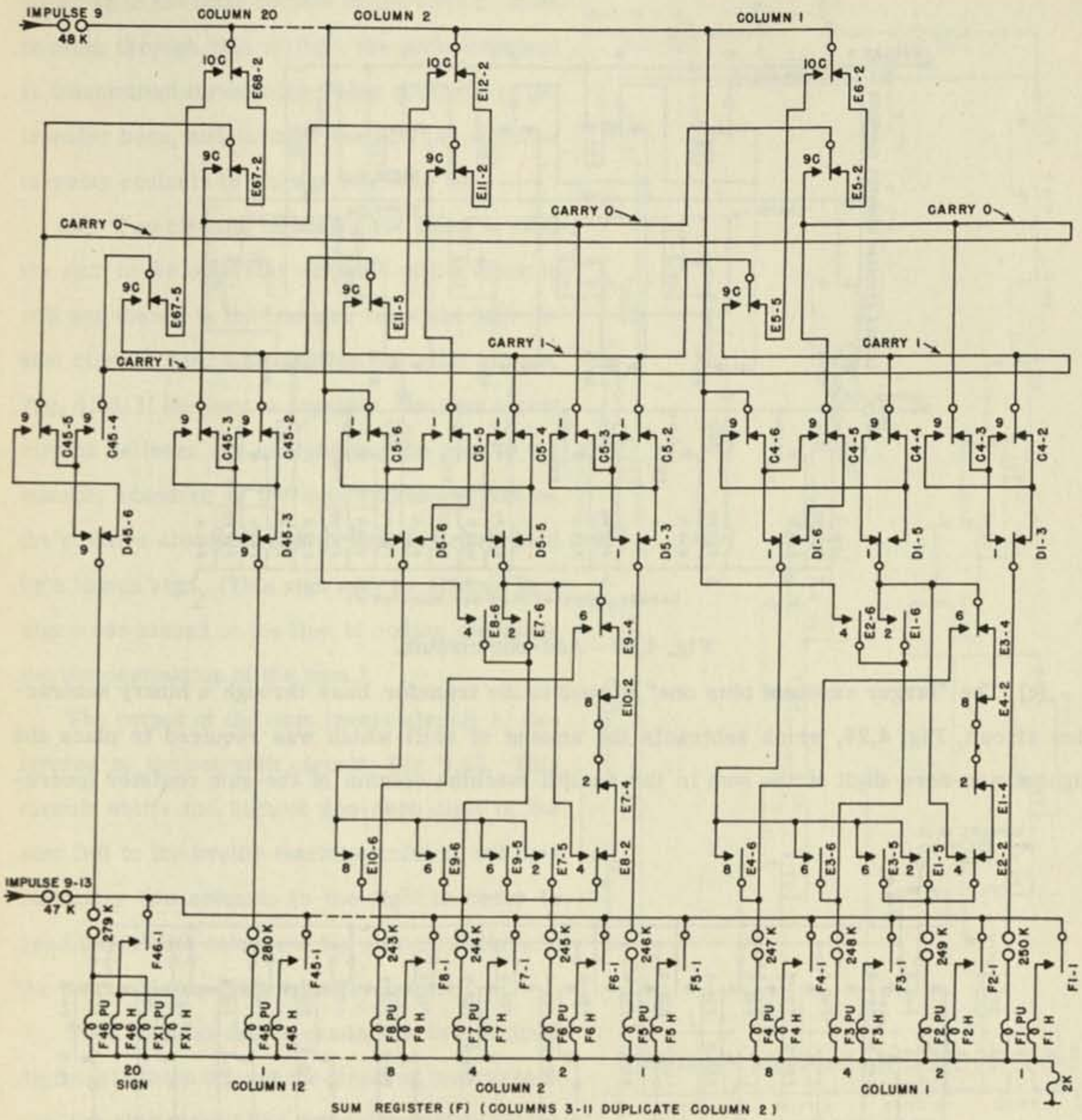

Fig. 4.17 - Carry circuit.

panel. Contact AA1-1 closes a circuit to the main machine alarm relay. This will stop the machine and cause a bell to ring. If the alarm relays are picked up during one of the first two adding operations of a cycle, the machine will stop at the end of that cycle. If the alarm circuit is closed during the third or fourth adding operation of a cycle, the machine will stop at the end of the next succeeding cycle.

(b) If either of the off-machine relays is energized, the read-out circuit of the sum will be interrupted, Fig. 4.23, and no read-out to the transfer buss will occur; that is, zero will be read out in place of the sum.

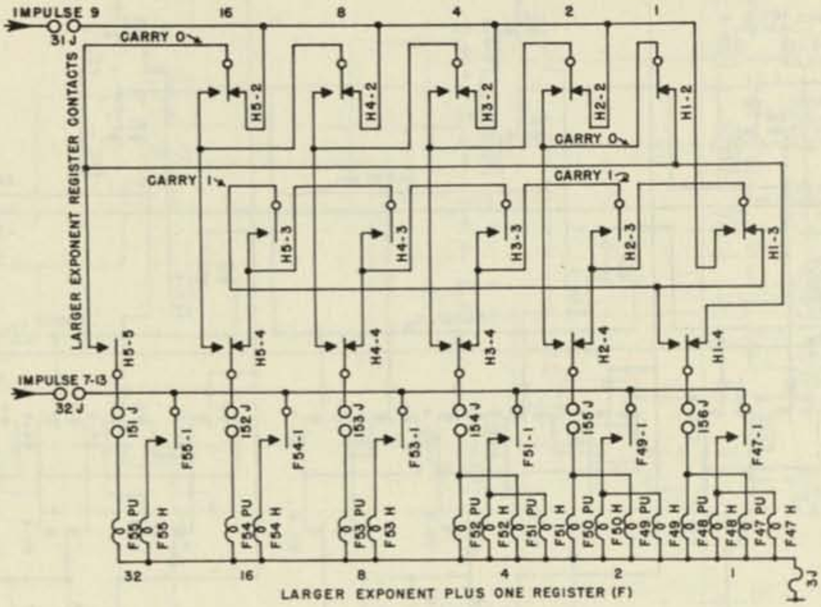

Fig. 4.18 - Add-one circuit.

(c) The "larger exponent plus one" is read to the transfer buss through a binary subtraction circuit, Fig. 4.24, which subtracts the amount of shift which was required to place the highest non-zero digit of the sum in the twelfth machine column of the sum register (corre-

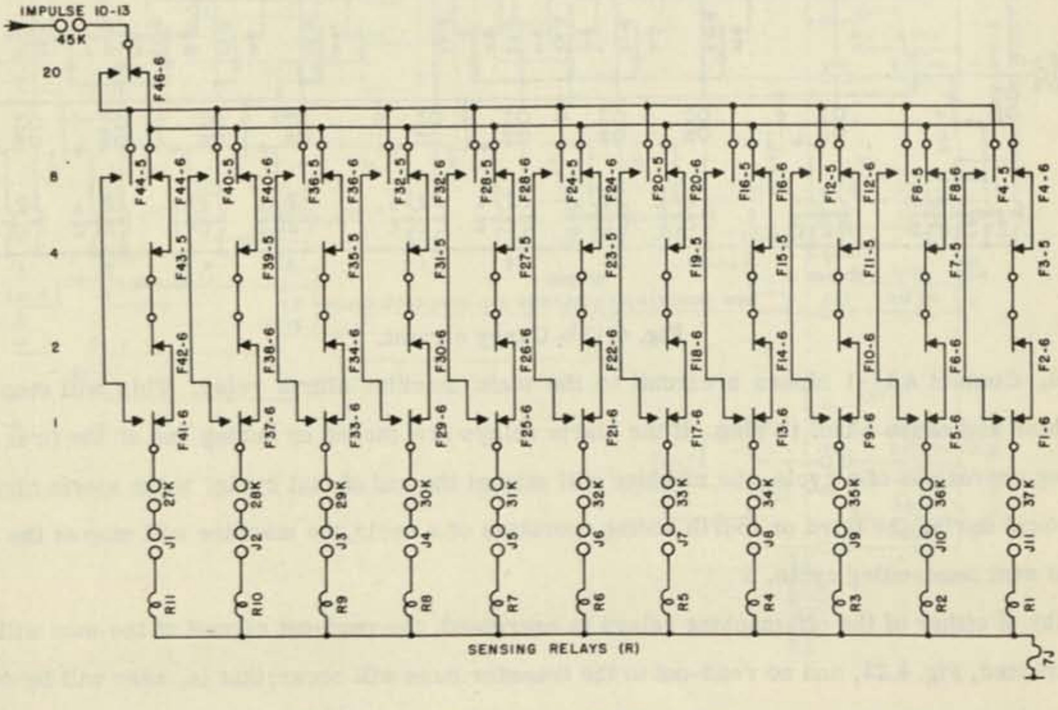

Fig. 4.19 - Pick-up of sensing relays.

sponding to the tenth column of the buss). After passing through this circuit, the sum exponent is transmitted through out-relay contacts to the transfer buss, and through the storage register in-relay contacts to storage register 021.

(d) Two circuits in series are used to read the sum to the out-relay contacts of the addition unit and thence to the transfer buss; the sum invert circuit, Fig. 4.23, and the out-shift circuit, Fig. 4.25. If the sum is negative, the sum invert circuit delivers the complement on nine of the quantity standing in the sum registers; that is, the positive absolute value of the sum preceded by a minus sign. (This sign may be altered by a sign-code placed on the line of coding designating the destination of the sum.)

The output of the sum invert circuit is delivered to the out-shift circuit, Fig. 4.25. This circuit shifts the highest non-zero digit of the sum left to the twelfth machine column, and then statically two columns to the right in order to read the twelfth column of the sum register into the tenth column of the transfer buss.

Thus impulse twelve reads the ten decimal digits of the sum through the direct or invert readout, the shift circuit, the out-relay contacts to the transfer buss, and then through the storage register in-relay contacts to storage register 021.

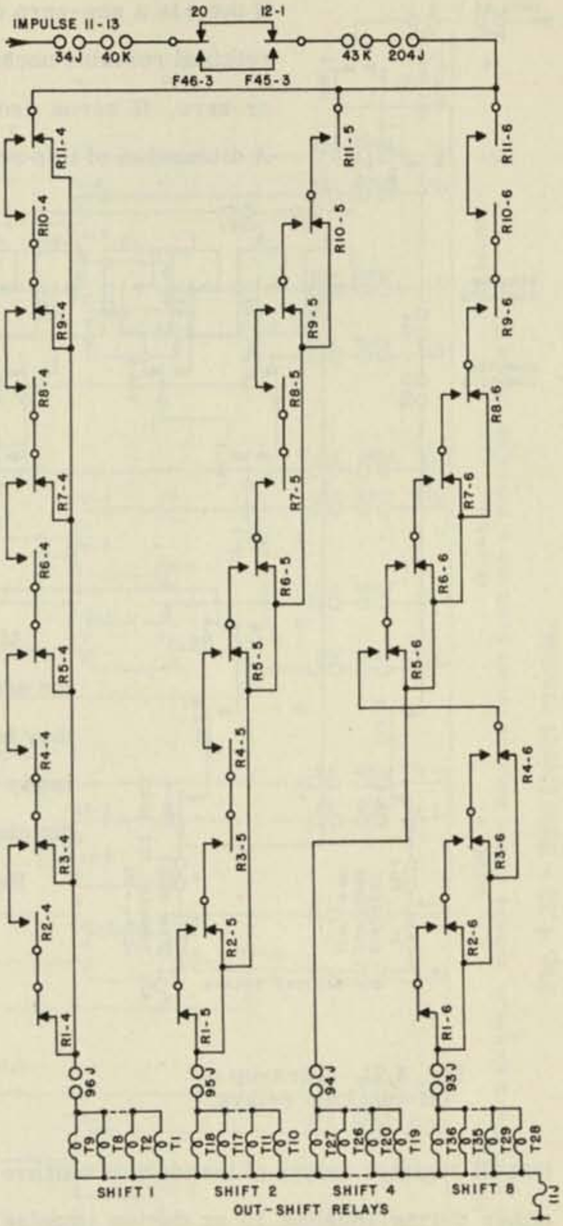

Fig. 4.20 - Pick-up of out-shift relays.

(e) The shift circuit, Fig. 4.25, also supplies a round-off of the sum. Two situations may arise in which a round-off is required:

(1) no out-shift relays are energized, and only the static shift of two columns to the right takes place;

(2) out-shift one is energized, and combined with the static shift right causes a shift of one column to the right.

If there is a non-zero digit in the columns dropped-off, the lowest column retained remains unchanged if it is odd, and a one is added if it is even or zero. If zeros are dropped-off to the right no correction is made. A discussion of this round-off procedure will be found in Appendix II.

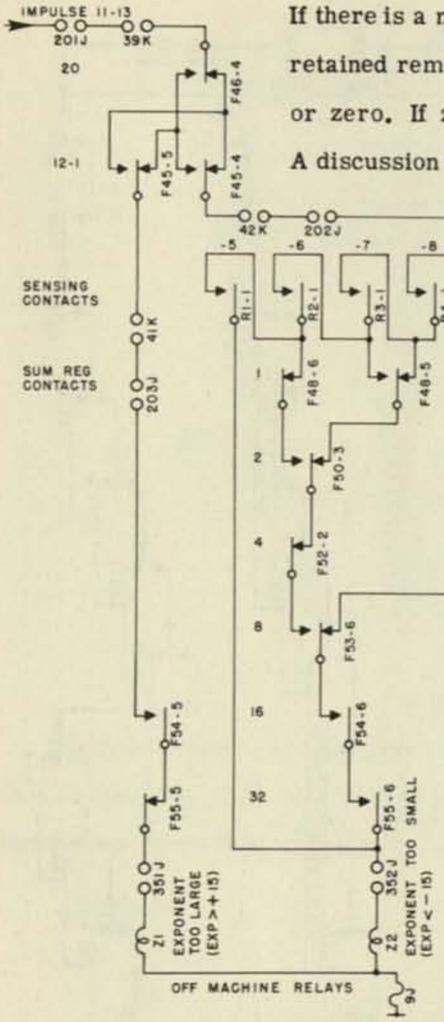

Fig. 4.21 - Pick-up of off-machine relays.

At the end of impulse 12 all registers and relays of the addition unit return to their de-energized positions if they have not already done so. The addition unit is thus ready to receive the next augend and addend as may be dictated by the coding.

Reference to the timing diagram, Fig. 4.6, shows that all register relays of the addition unit are dropped out either during impulse 10 or during impulse 12. Hence the relays are held in their energized positions for a sufficient number of impulse times to permit visual inspection of their behavior.

If the addition unit is suspected of making an error in the sum, $s = x + y$, where both x and y are known, the values of the intermediate quantities delivered to the various registers, and the proper positions of the circuit components may be computed. By means of the test panels,

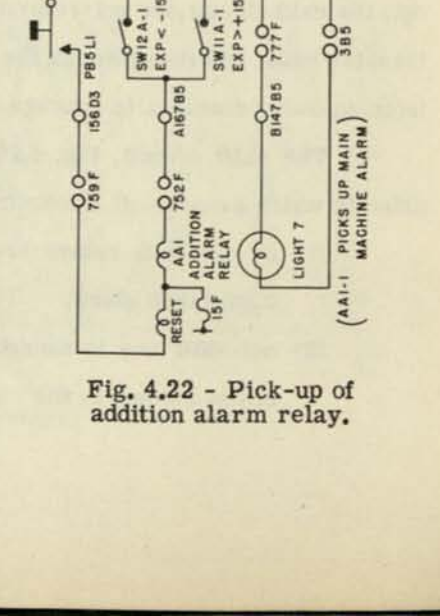

Fig. 4.22 - Pick-up of addition alarm relay.

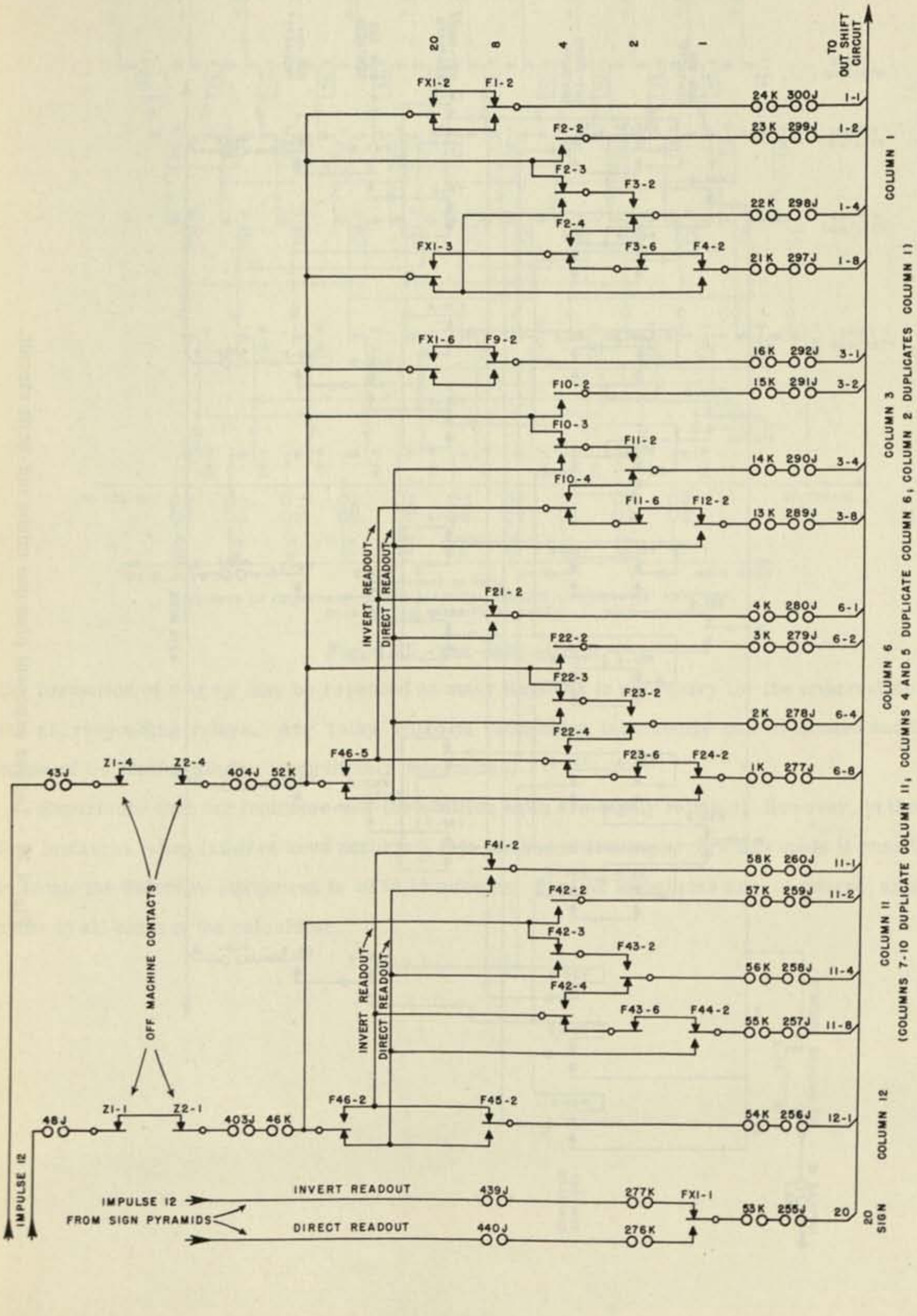

Fig. 4.23 - Sum invert circuit.

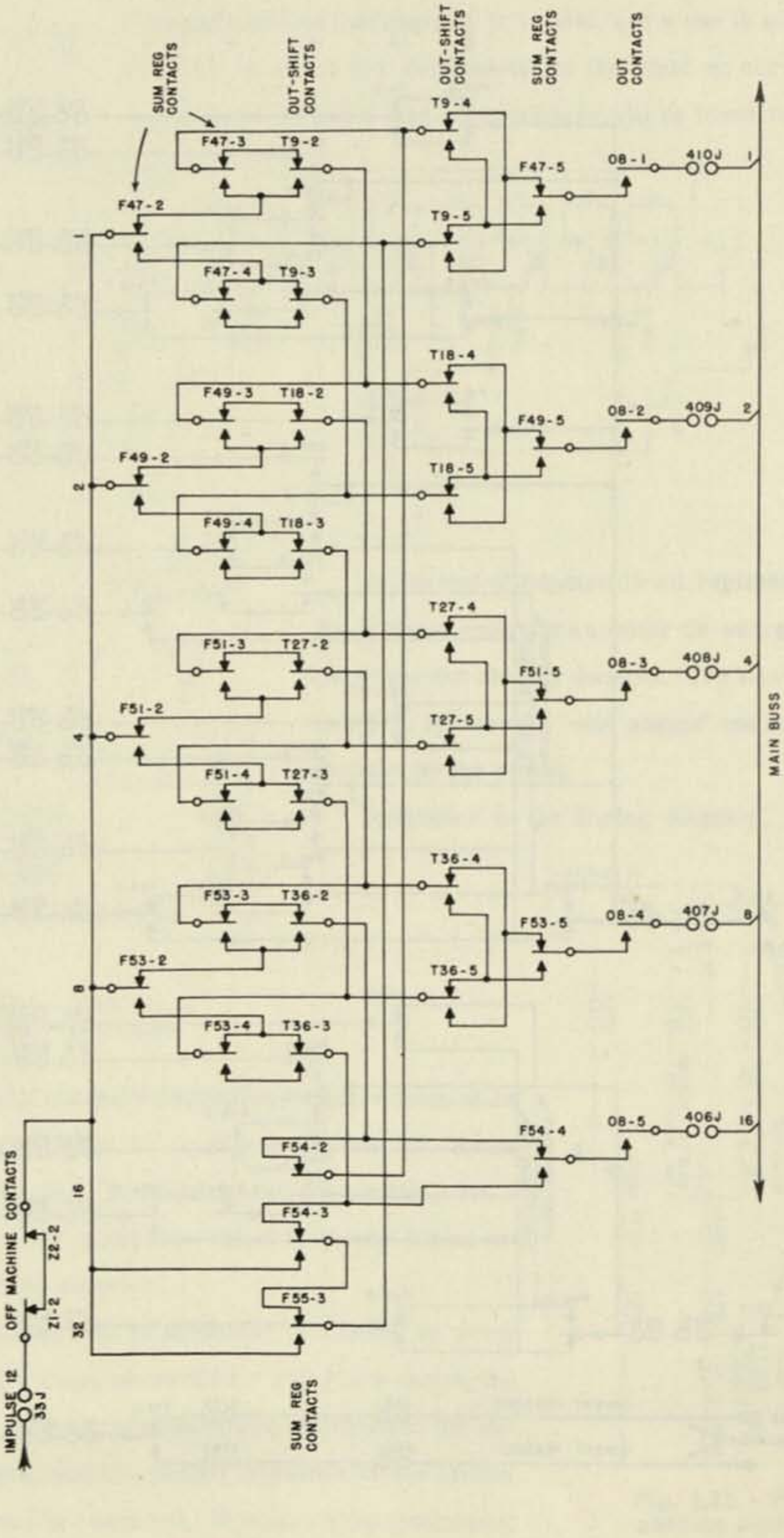

Fig. 4.24 - Larger exponent plus one minus out-shift circuit.

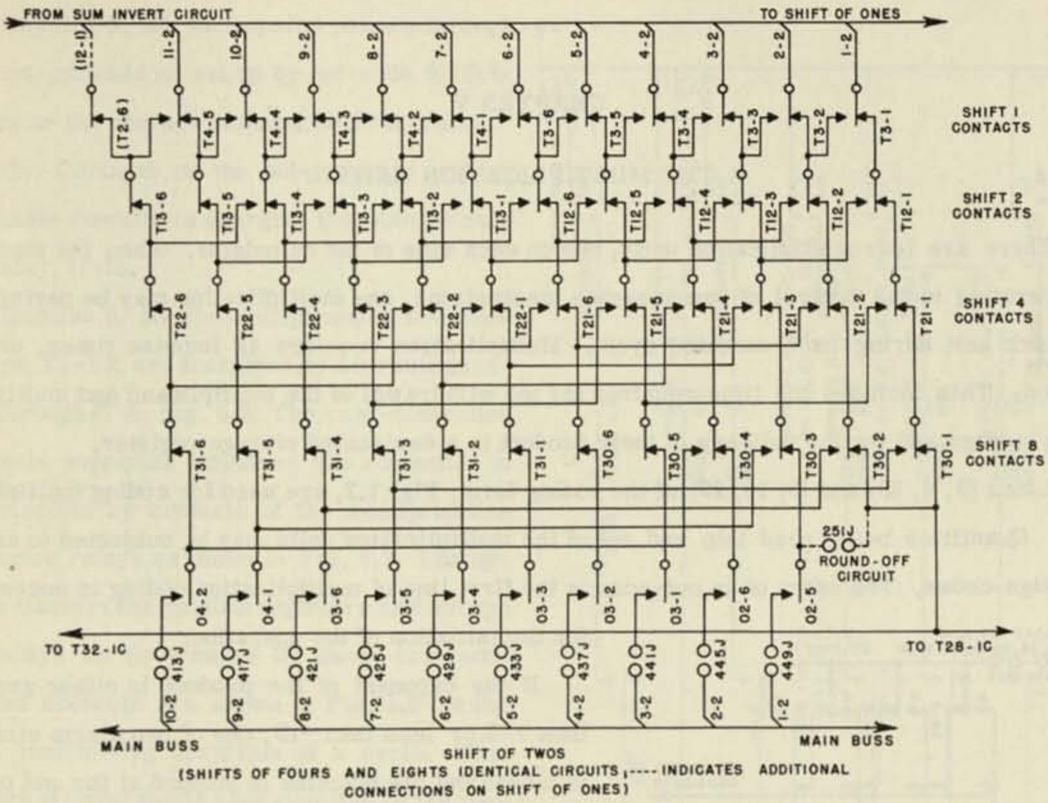

Fig. 4.25 - Out-shift circuit.

the formation of $s = x + y$ may be repeated as many times as is necessary for the observation of the corresponding relays. Any relay which is functioning incorrectly can be located and the cause of its malfunctioning immediately determined.

Experience thus far indicates that the addition units are highly reliable. However, in those few instances when failures have occurred, this method of tracing errors has made it possible to locate the defective equipment in 10 to 15 minutes. Similar techniques are, of course, applicable to all units of the calculator.

CHAPTER V

THE MULTIPLICATION UNITS

There are four multiplication units, two on each side of the calculator. When the machine is operating under control of two sequence mechanisms, one multiplication may be performed by each unit during each machine cycle. Multiplication requires 42 impulse times, or 0.7 second. This includes the time required for the withdrawal of the multiplicand and multiplier from storage and for the delivery of their product to a designated storage register.

Lines (3, 4, 23) and (9, 10, 29) of the coding form, Fig. 1.2, are used for coding multiplication. Quantities being read into and out of the multiplication units may be subjected to any of the sign-codes. The entry of an out-code in the first line of multiplication coding is necessary for the initiation of the operation.

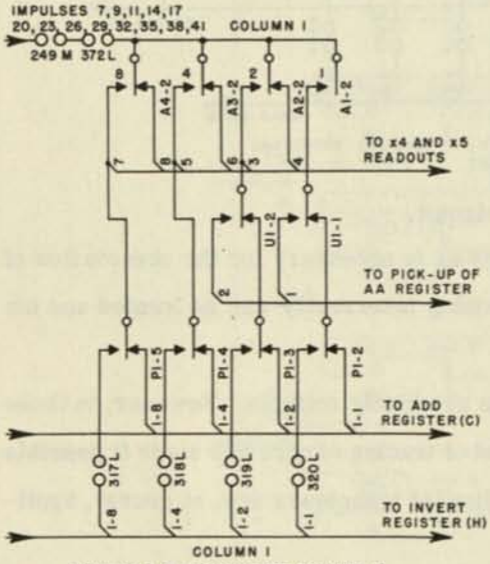

Fig. 5.1 - Times-one read-out circuit.

If the exponent of the product is either greater than +15 or less than −15, one of two alarm circuits is closed and the machine is stopped at the end of the next succeeding cycle. Either of the alarm circuits may be cut off by toggle switches on the main control panel. If the exponent falls outside the machine capacity, or if either factor is zero, a circuit is closed which prevents the read-out of the product, and delivers zero to the transfer buss.

The operation of a multiplication unit is shown, impulse by impulse, in the block diagram, Fig. 5.3. The timing shown is that of the first multiplying operation in a cycle. The registers and groups of relays, their characteristics and purposes are tabulated in Fig. 5.4. In Fig. 5.6, a numerical example is presented. Here the multiplicand, a, and the multiplier, b ($a = +3.1415\ 92654 \times 10^{7}$, $b = +6.0098\ 45237 \times 10^{-3}$), are assumed to be recorded in storage registers 016 and 005, respectively. The product, ab, is to be delivered to storage register 023. This illustrative example will be used throughout the following detailed description of the multiplication unit. Since multiplication is initiated by line 3 of the coding of a cycle, the operation begins with impulse 5.

Impulse 5. (a) An impulse passes through the out-pyramid as set up by out-code (016) to energize the storage register 016 out-relay.

(b) Contacts on the out-pyramid relays complete circuits to energize the multiplicand in-relay, I1-I8.

Impulse 6. (a) The multiplication sequence relays, Y1-Y2, are energized by a circuit passing through I7-6, Fig. 5.2. The cam-controlled contacts supplying impulses are connected to the circuits by contacts of the multiplication sequence relays as shown in Fig. 5.7. The operate times of the various registers and groups of relays as determined by these cam-controlled contacts are shown in Fig. 5.5 for the first multiplying operation of a cycle. This pattern of impulses is also supplied to the second multiplication unit on the same side of the calculator during impulses 17-58 of each cycle.

(b) The multiplicand is transferred from storage register 016, through the storage register out-relay contacts to the main buss, through the multiplicand in-relay contacts to the multiplicand register, A1-A46. The read-in circuit for the ten decimal digits is similar to the read-in of the augend to an addition unit (cf. Fig. 4.7). The read-in of the algebraic sign and of the exponent is shown in Fig. 5.9a.

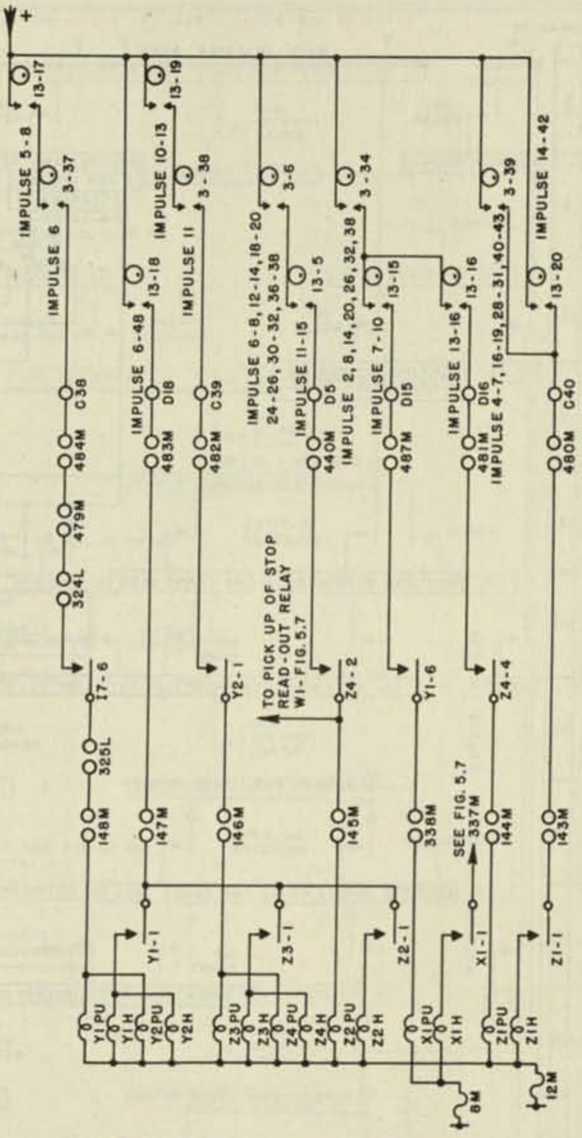

Fig. 5.2 - Pick-up of multiplication sequence and multiple selector relays.

(c) The add register C in-relay, L1-L7, is picked up and held through contacts I7-5 of the multiplicand in-relay and Y1-3 of the multiplication sequence relay connected in parallel, Fig. 5.7.

(d) The add register D in-relay, M1-M8, is picked up and held by the same circuit through I7-5 and Y1-3.

Impulse 7. (a) The quantity 1 × *(MC)* is read through the times-one read-out circuit, Fig. 5.1, composed of contacts of the multiplicand register relays, through the add register C in-relay

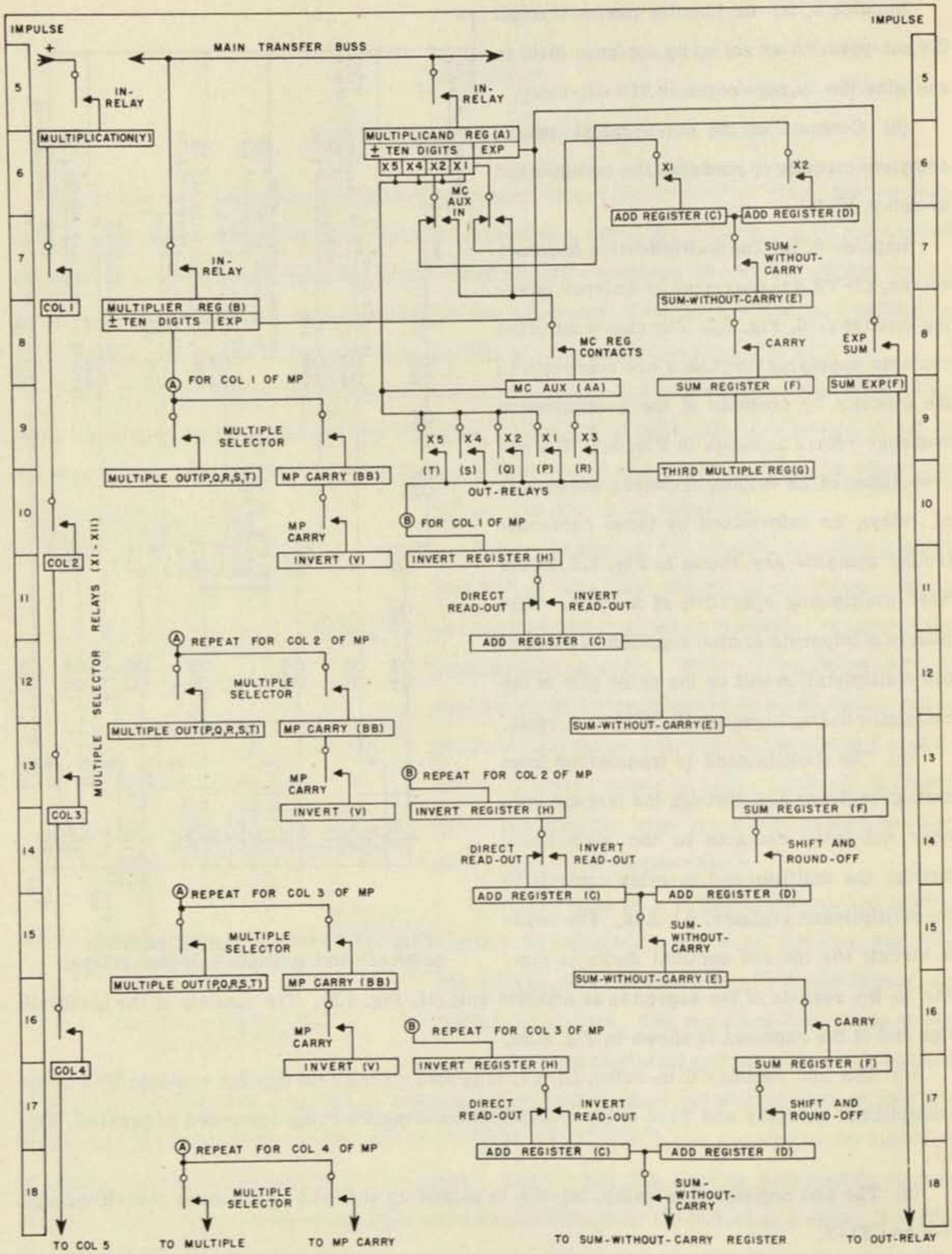

Fig. 5.3 - Multiplication unit.

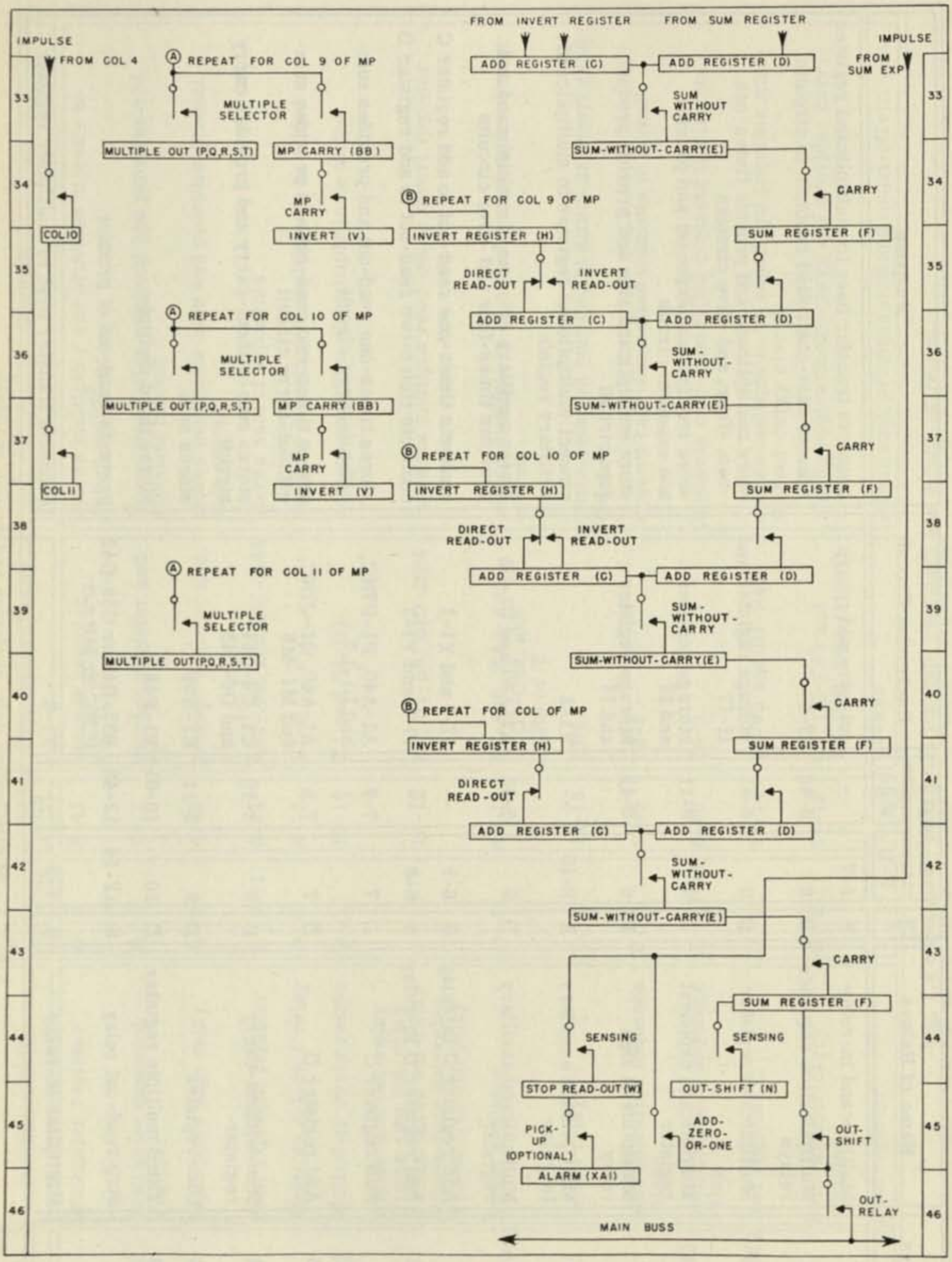

Fig. 5.3 continued - Multiplication unit.

Relays	Name of Relays	Type	Impulses		Energizing Circuit	Purpose
			P-U	Hold		
I1-I8	Multiplicand in-relay	S	5-7	--	out-pyramid relays	connects transfer buss to multiplicand register
Y1-Y2	Multiplication sequence relays	D	6	6-48	I7-6	connect cam-controlled contacts to circuits
A1-A40	Multiplicand register	D	6	6-43	storage register and I1-I7	store multiplicand and provide times-one, -two, -four, and -five circuits
A41-A45	Multiplicand exponent register	D	6	6-11	storage register and I8	store multiplicand exponent and provide add exponent circuit
A46	Multiplicand sign relay	D	6	6-48	storage register and I8	store multiplicand sign and provide product sign circuit
U1-U5	Multiplicand auxiliary in-relay	S	8-10	--	Y1-2	connect multiplicand register to multiplicand auxiliary register
AA1-AA30	Multiplicand auxiliary register	D	9	5-43	A1-A40 and U1-U5	stores auxiliary columns of multiplicand and provides times-four and -five circuits
L1-L7	Add register C in-relay	S	6-8	--	I7-5 and Y1-3	connects times-one read-out to add register C
M1-M8	Add register D in-relay	S	6-8	--	I7-5 and Y1-3	connects times-two read-out to add register D
C1, C4-C44	Add register C	D	7	7-9	A1-A40, P1-P7NC, and L1-L7	stores times-one read-out and provides sum-without-carry circuit
D6-D45	Add register D	D	7	7-9	A1-A40, Q1-Q7NC, and M1-M8	stores times-two read-out and provides sum-without-carry circuit
E1-E98	Sum-without-carry register	D	8	8-10	C1, C4-C44, and D6-D45	stores sum-without-carry and provides carry circuit
F1-F49	Sum register	D	9	9-11	E1-E98	stores sum
G1-G42	Third multiple register	D	10	10-51	F1-F49	stores third multiple
W1	Stop read-out relay	S	12-14	12-48	B37-B40 or G38-G42 if MC or MP = O	prevents read-out of product
J1-J8	Multiplier in-relay	S	7-9	--	Y1-5	connects transfer buss to multiplier register

Fig. 5.4 - Multiplication unit, registers and groups of relays.

Relays	Name of Relays	Type	Impulses		Energizing Circuit	Purpose
			P-U	Hold		
B1-B40	Multiplier register	D	8	8-43	storage register and J1-J7	stores multiplier and provides circuits to select multiples
B41-B46	Multiplier exponent register	D	8	8-11	storage register and J8	stores multiplier exponent and provides add exponent circuit
B47	Multiplier sign relay	D	8	6-48	storage register and J8	stores multiplier sign and provides product sign circuit
F50-F56	Sum exponent register	D	9-11	9-48	A41-A45 and B41-B46	stores sum of exponents
X1	Multiple selector relay	D	8	8-12	Y1-6	controls selection of multiple to be added
BB3-BB4	Multiplier carry relays	D	10	10-14	X1 and B1-B4	control selection of multiple to be added
P1-P7 Q1-Q7 R1-R8 S1-S7 T1-T7	Times-one out-relay Times-two out-relay Times-three out-relay Times-four out-relay Times-five out-relay	S	10	10-12	X1, B1-B4, BB3-BB4	connects multiple read-out to invert register
H1-H43	Invert register	D	11	11-13	A1-A45, AA1-AA30 or G1-G42, and PQRS or T	stores multiple to be added and provides invert circuit
V1-V5	Invert relays	D	11	11-13	BB4	route selected multiple to direct or invert read-out
Z3-Z4	Multiplication sequence relays	D	11	6-48	Y2-1	connect cam-controlled contacts to circuit
Z2	Multiplication sequence relay	D	12-14	6-48	Z4-2	connects cam-controlled contacts to circuits
C1, C4-C49 C4-C49	Add register C	D	12	12-14	V1-V5 and H1-H43	stores multiple to be added and provides sum-without-carry circuit
E1-E98	Sum-without-carry register	D	13	13-15	C1, C4-C49 and D1-D45, D48-D49NC	stores sum-without-carry and provides carry circuit
F1-F49	Sum register	D	14	14-16	E1-E98	stores sum, provides shift and round-off circuits

Fig. 5.4 continued - Multiplication unit, registers and groups of relays.

Relays	Name of Relays	Type	Impulses		Energizing Circuit	Purpose
			P-U	Hold		
X2	Multiple selector relay	D	11	11-15	X1-2	controls selection of multiple to be added
BB1-BB2	Multiplier carry relays	D	13	13-17	X2 and B5-B8	controls selection of multiple to be added
P1-P7 Q1-Q7 R1-R8 S1-S7 T1-T7	Times-one out-relay Times-two out-relay Times-three out-relay Times-four out-relay Times-five out-relay	S	13	13-15	X2, B5-B8, BB1-BB2	connects multiple read-out to invert register
H1-H43	Invert register	D	14	14-16	A1-A45, AA1-AA30 or G1-G42, PQRS or T	stores multiple to be added and provides invert circuit
V1-V5	Invert relays	S	14	14-16	BB2	routes selected multiple to direct or invert read-out
Z1	Multiplication sequence relay	D	14	14-43	Z4-4	connects cam-controlled contacts to circuits
C1 and C4-C49	Add register C	D	15	15-17	V1-V5 and H1-H43	stores multiple to be added and provides sum-without-carry circuit
D1-D45, D48-D49	Add register D	D	15	15-17	F1-F49	stores partial product and provides sum-without-carry circuit
E1-E98	Sum-without-carry register	D	16	16-18	C1, C4-C49, and D1-D45, D48-D49	stores sum-without-carry and provides carry circuit
F1-F49	Sum register	D	17	17-19	E1-E98	stores partial product and provides shift and round-off circuits
F1-F49	Sum register	D	44	44-50	E1-E98	stores product and provides shift and round-off circuits
N1-N9	Out-shift relays	S	45-47	--	F41-F44	provide out-shift circuit
O1-O9	Product out-relay	S	45-47	--	Z4-3	connects sum register to transfer buss
W2-W3	Stop read-out relays	S	45-47	--	F41-F56 if exp >+15 or <-15	provide circuits to multiplication alarm relay
XA1	Multiplication alarm relay	L	46	--	W2 or W3	provides light and main machine alarm circuits

Fig. 5.4 concluded - Multiplication unit, registers and groups of relays.

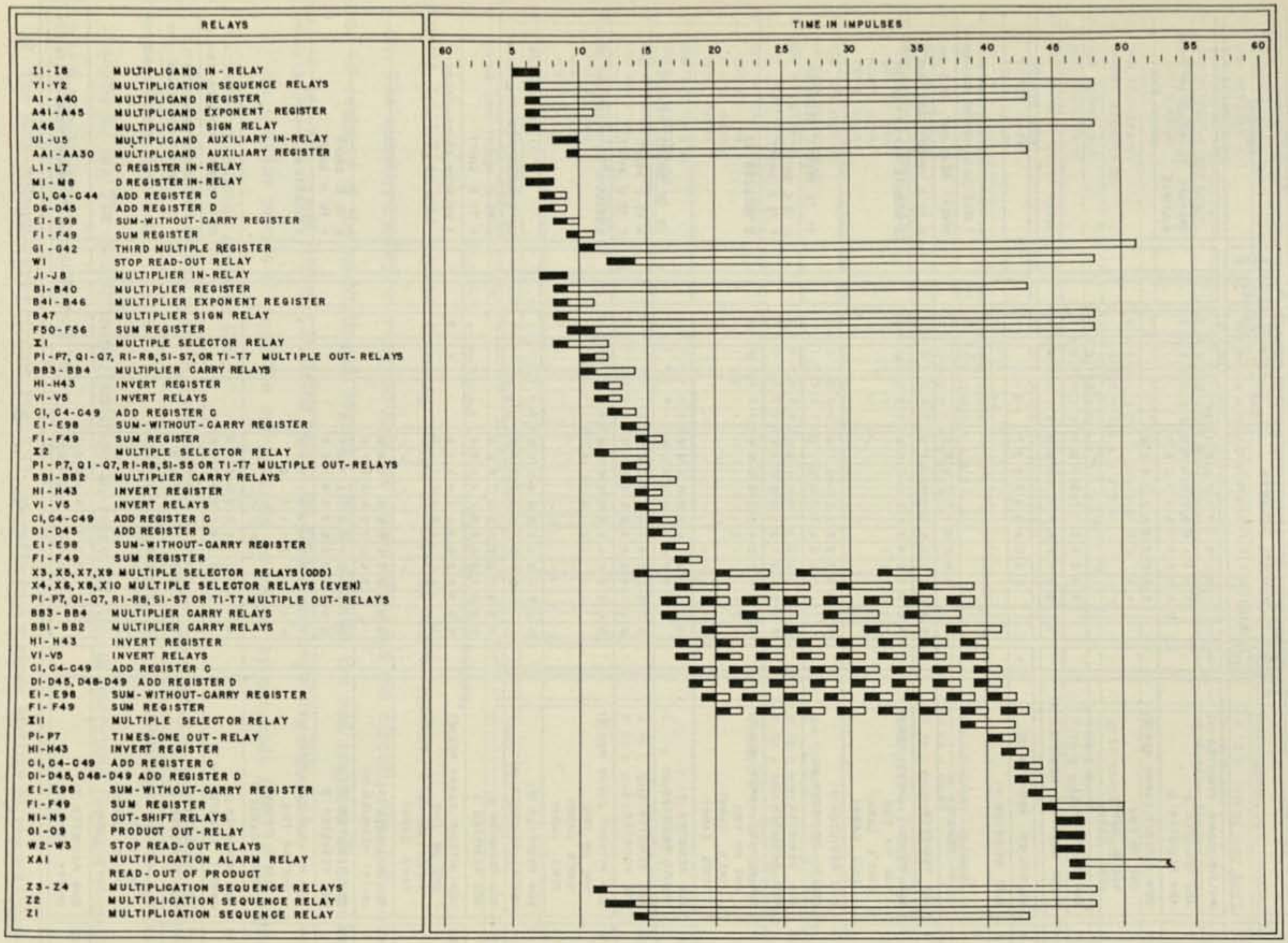

Fig. 5.5 - Multiplication timing.

IMPULSE	REGISTER	SIGN	DECIMAL COLUMNS													EXP.	DIGIT OF MP	MULTIPLE	MP CARRY	INVERT	PURPOSE
		20	13	12	11	10	9	8	7	6	5	4	3	2	1						
6	MULTIPLICAND REGISTER (A)	+				3	1	4	1	5	9	2	6	5	4	+7					
7	ADD REGISTER C				3	1	4	1	5	9	2	6	5	4	0						PREPARE TO BUILD UP THIRD MULTIPLE
	ADD REGISTER D			0	6	2	8	3	1	8	5	3	0	8	0						
8	SUM-WITHOUT-CARRY REG (E)				8	2	2	2	4	6	6	8	4	2	0						
	ONE OR TWO				1	1		2	2	1	1	1	1								
	NINE'S CARRY				✓							✓									
	TEN'S CARRY						✓			✓				✓							
9	SUM REGISTER (F)				9	4	2	4	7	7	7	9	6	2	0						
10	THIRD MULTIPLE REGISTER (G)				0	9	4	2	4	7	7	7	9	6	2						
8	MULTIPLIER REGISTER (B)	+				6	0	0	9	8	4	5	2	3	7	−3					
9	SUM REGISTER (F)															+4					
10																	7	−3	✓		7 SELECTS X3, INVERT, AND CARRY
11	INVERT REGISTER (H)				0	9	4	2	4	7	7	7	9	6	2					✓	INVERT READ-OUT TO C
12	ADD REGISTER C		9	9	0	5	7	5	2	2	2	0	3	7	9						H TO C INVERT AND SHIFT
13	SUM-WITHOUT-CARRY REG(H)		8	8	0	4	6	4	2	2	2	0	2	6	8		3	4			3 SELECTS X4=X3 + CARRY
	ONE OR TWO		1	1	0	1	1	1					1	1	1						
	NINE'S CARRY		✓	✓											✓						
	TEN'S CARRY																				
14	SUM REGISTER (F)		9	9	0	5	7	5	2	2	2	0	3	7	9						
	INVERT REGISTER (H)				1	2	5	6	6	3	7	0	6	1	6						X4 TO INVERT REGISTER
15	ADD REGISTER C		0	1	2	5	6	6	3	7	0	6	1	6	0						H TO C SHIFT
	ADD REGISTER D		9	9	9	0	5	7	5	2	2	2	0	3	7						F TO D SHIFT
16	SUM-WITHOUT-CARRY REG (E)		8	8	0	4	0	2	6	8	2	8	0	8	6		2	2			2 SELECTS X2
	ONE OR TWO		1	2	1	1	1	1	2	1			1	1	1						
	NINE'S CARRY		✓							✓				✓							
	TEN'S CARRY			✓	✓		✓	✓													
17	SUM REGISTER (F)		0	1	1	6	2	3	8	9	2	8	1	9	8						
	INVERT REGISTER (H)				0	6	2	8	3	1	8	5	3	0	8						X2 TO INVERT REGISTER
18	ADD REGISTER C		0	0	6	2	8	3	1	8	5	3	0	8	0						H TO C SHIFT
	ADD REGISTER D		0	0	1	1	6	2	3	8	9	2	8	1	9						F TO D SHIFT
19	SUM-WITHOUT-CARRY REG (E)		0	0	6	2	4	4	2	6	2	4	8	8	8		5	−5	✓		5 SELECTS X5, INVERT, AND CARRY
	ONE OR TWO				1	1		1	2		2	1		1	1						
	NINE'S CARRY													✓	✓						
	TEN'S CARRY						✓			✓	✓										
20	SUM REGISTER (F)		0	0	7	4	4	5	5	7	4	5	8	9	9						
	INVERT REGISTER (H)				1	5	7	0	7	9	6	3	2	7	0					✓	X5 TO INVERT REGISTER, INVERT
21	ADD REGISTER C		9	8	4	2	9	2	0	3	6	7	2	9	9						H TO C INVERT AND SHIFT
	ADD REGISTER D		0	0	0	7	4	4	5	5	7	4	5	8	9						F TO D SHIFT
22	SUM-WITHOUT-CARRY REG (E)		8	8	4	8	2	6	4	6	2	0	6	6	6		4	5			4 SELECTS X5=X4+CARRY
	ONE OR TWO		1			1	1		1	2	1	1	1	1	2						
	NINE'S CARRY		✓			✓															
	TEN'S CARRY						✓				✓	✓		✓	✓						
23	SUM REGISTER (F)		9	8	5	0	3	6	5	9	4	1	8	8	8						
	INVERT REGISTER (H)				1	5	7	0	7	9	6	3	2	7	0						
24	ADD REGISTER C		0	1	5	7	0	7	9	6	3	2	7	0	0						H TO C SHIFT
	ADD REGISTER D		9	9	8	5	0	3	6	5	9	4	1	8	8						F TO D SHIFT
25	SUM-WITHOUT-CARRY REG (E)		8	8	2	0	0	8	4	0	0	6	6	8	8		8	−2	✓		8 SELECTS X2, INVERT, AND CARRY
	ONE OR TWO		1	2	1	2		2	1	1	2		2								
	NINE'S CARRY		✓																		
	TEN'S CARRY			✓	✓	✓		✓	✓	✓	✓										
26	SUM REGISTER (F)		0	1	4	2	1	1	6	2	2	6	8	8	9						
	INVERT REGISTER (H)				0	6	2	3	8	1	8	5	3	0	8					✓	X2 TO INVERT REGISTER, INVERT
27	ADD REGISTER C		9	9	3	7	1	6	8	1	4	6	9	1	9						H TO C INVERT AND SHIFT
	ADD REGISTER D		0	0	1	4	2	1	1	6	2	2	6	8	9						F TO D SHIFT AND ROUND-OFF
28	SUM-WITHOUT-CARRY REG (E)		8	8	2	0	2	6	8	6	6	8	4	8	6		9	0	✓		9 SELECTS (0=X9+CARRY)+CARRY
	ONE OR TWO		1	1	2	1	1	1	1	1			1	1	2						
	NINE'S CARRY		✓	✓					✓					✓							
	TEN'S CARRY					✓							✓		✓						
29	SUM REGISTER (F)		9	9	5	1	3	7	9	7	6	9	6	0	8						
	INVERT REGISTER (H)				0	0	0	0	0	0	0	0	0	0	0					✓	X0 TO INVERT REGISTER, INVERT

Fig. 5.6 - Example of multiplication.

IMPULSE	REGISTER	SIGN 20	13	12	11	10	9	8	7	6	5	4	3	2	1	EXP.	DIGIT OF MP	MULTI-PLE	MP CARRY	INVERT	PURPOSE
30	ADD REGISTER C		9	9	9	9	9	9	9	9	9	9	9	9	9						H TO C INVERT AND SHIFT
	ADD REGISTER D		9	9	9	5	1	3	7	9	7	6	9	6	0						F TO D SHIFT
31	SUM-WITHOUT-CARRY REG(E)		6	6	6	2	8	0	4	6	4	4	6	4	8		0	1			0 SELECTS XI• XO+CARRY
	ONE OR TWO		2	2	2	2	2	2	2	2	2	1	2	1	1						
	NINE'S CARRY														✓						
	TEN'S CARRY		✓	✓	✓	✓	✓	✓	✓	✓	✓	✓	✓	✓							
32	SUM REGISTER (F)		9	9	9	5	1	3	7	9	7	6	9	5	9						
	INVERT REGISTER (H)				0	3	1	4	1	5	9	2	6	5	4						XI TO INVERT REGISTER
33	ADD REGISTER C		0	0	3	1	4	1	5	9	2	6	5	4	0						H TO C SHIFT
	ADD REGISTER D		9	9	9	9	5	1	3	7	9	7	6	9	5						F TO D SHIFT
34	SUM-WITHOUT-CARRY REG(E)		8	8	0	8	8	0	6	4	0	2	0	2	4		0	0			
	ONE OR TWO		1	1	2	2	1	2	2	2	1	1	1	1	1						
	NINE'S CARRY		✓	✓			✓														
	TEN'S CARRY				✓	✓				✓	✓	✓	✓	✓							
35	SUM REGISTER (F)		0	0	3	0	9	2	9	7	2	4	2	3	6						
	INVERT REGISTER (H)				0	0	0	0	0	0	0	0	0	0	0						XO TO INVERT REGISTER
36	ADD REGISTER C		0	0	0	0	0	0	0	0	0	0	0	0	0						H TO C SHIFT
	ADD REGISTER D		0	0	0	3	0	9	2	9	7	2	4	2	3						F TO D SHIFT
37	SUM-WITHOUT-CARRY REG (E)		0	0	0	2	0	8	2	8	6	2	4	2	2		6	−4	✓		6 SELECTS X4+INVERT+CARRY
	ONE OR TWO					1		1		1	1				1						
	NINE'S CARRY							✓		✓											
	TEN'S CARRY																				
38	SUM REGISTER (F)		0	0	0	3	0	9	2	9	7	2	4	2	3						
	INVERT REGISTER (H)				1	2	5	6	6	3	7	0	6	1	6					✓	X4 TO INVERT REGISTER, INVERT
39	ADD REGISTER C		9	8	7	4	3	3	6	2	9	3	8	3	9						H TO C SHIFT
	ADD REGISTER D		0	0	0	0	3	0	9	2	9	7	2	4	3						F TO D SHIFT AND ROUND OFF
40	SUM-WITHOUT-CARRY REG(E)		8	8	6	4	4	2	4	4	6	8	0	6	0			1			0 SELECTS XI•XO+CARRY
	ONE OR TWO		1		1		2	1	1		2	2		1	2						
	NINE'S CARRY		✓																		
	TEN'S CARRY								✓		✓	✓	✓		✓						
41	SUM REGISTER (F)		9	8	7	4	6	4	5	5	9	1	0	8	2						
	INVERT REGISTER (H)				0	3	1	4	1	5	9	2	6	5	4						XI TO INVERT REGISTER
42	ADD REGISTER C		0	0	3	1	4	1	5	9	2	6	5	4	0						H TO C SHIFT
	ADD REGISTER D		9	9	8	7	4	6	4	5	5	9	1	0	8						F TO D SHIFT
43	SUM-WITHOUT-CARRY REG (E)		8	8	0	6	8	6	8	2	6	4	4	4	8						
	ONE OR TWO		1	1	1	2		1	1	2	1	1	2								
	NINE'S CARRY		✓	✓					✓												
	TEN'S CARRY				✓					✓		✓									
44	SUM REGISTER (F)			0	1	8	8	8	0	4	8	5	6	4	9						
46	READ-OUT TO TRANSFER BUSS	+				1	8	8	8	0	4	8	5	6	5	+5					SHIFT AND ROUND OFF

Fig. 5.6 continued - Example of multiplication.

contacts, L1-L7, to add register C, using relays C1, C4-C44 of the register, Fig. 5.10.

(b) The quantity $2\times(MC)$ is read through the times-two-read-out circuit, Fig. 5.8, composed of contacts of the multiplicand register relays, through the add register D in-relay contacts, M1-M8, to add register D, using relays D6-D46 of the register, Fig. 5.10.

(c) An impulse passes through the out-pyramid as set up by out-code (005) to energize the out-relay of storage register 005.

(d) The multiplier in-relay, J1-J8, is energized through contact Y1-5 of the multiplication sequence relay, Fig. 5.7.

Impulse 8. (a) The multiplicand auxiliary in-relay, U1-U5, is energized through contact Y1-2 of the multiplication sequence relay, Fig. 5.7.

(b) The sum-without-carry circuit, Fig. 5.11, operates in a manner similar to, but not identical with, those shown in Figs. 2.6, 2.7, and 4.16. In the present sum-without-carry register,

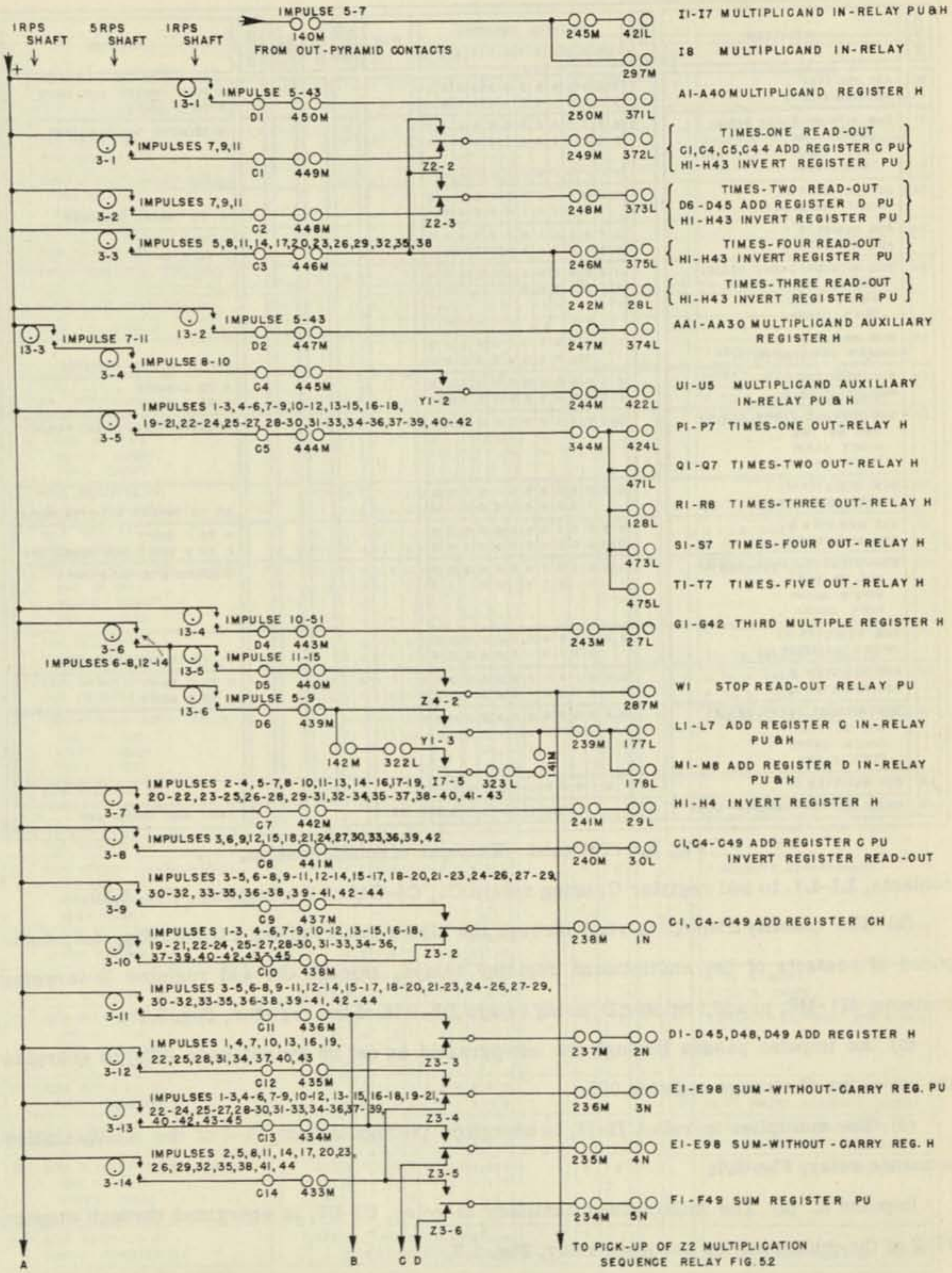

Fig. 5.7 - Cam-controlled contacts employed in multiplication units.

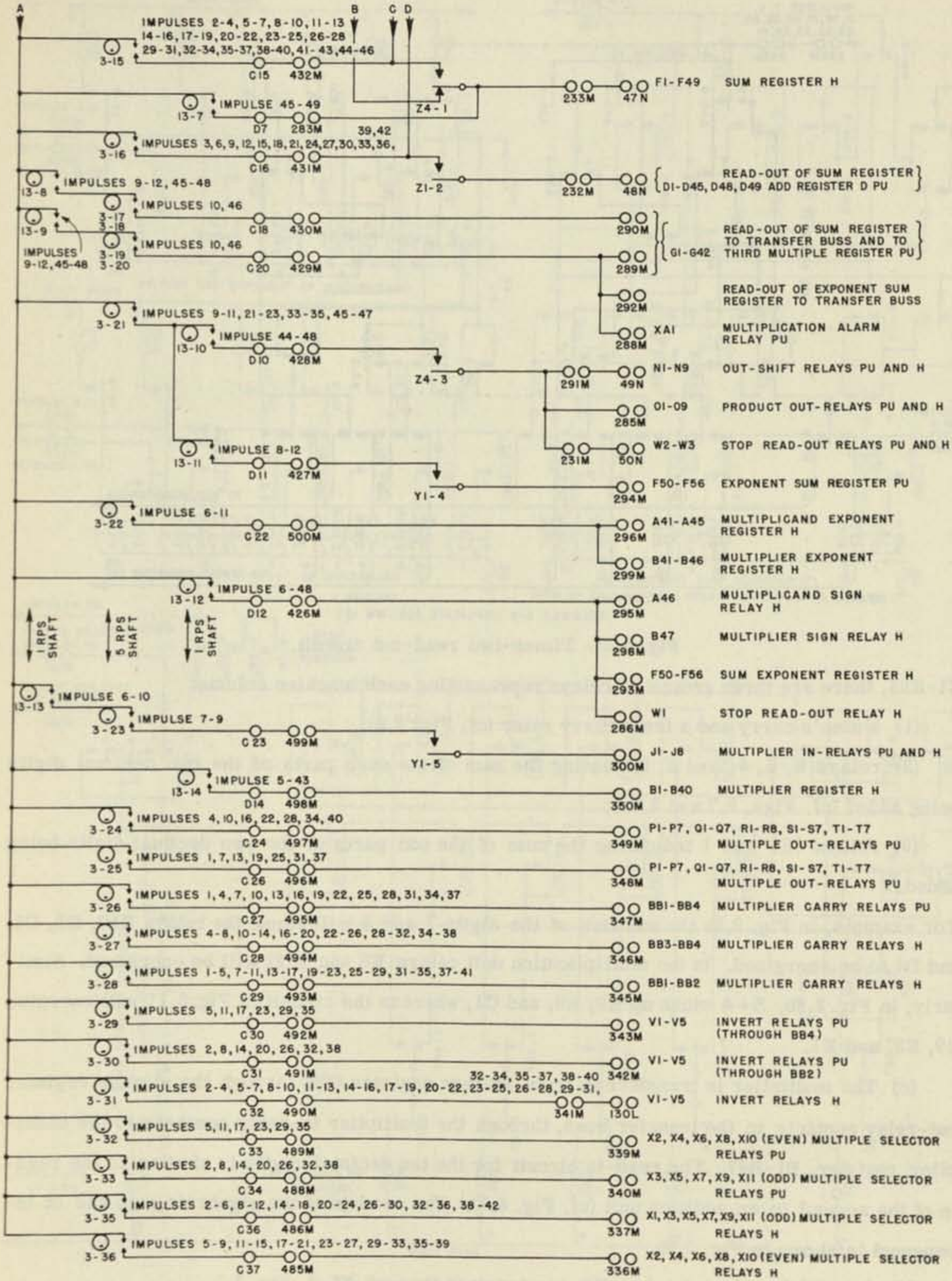

Fig. 5.7 continued - Cam-controlled contacts employed in multiplication units.

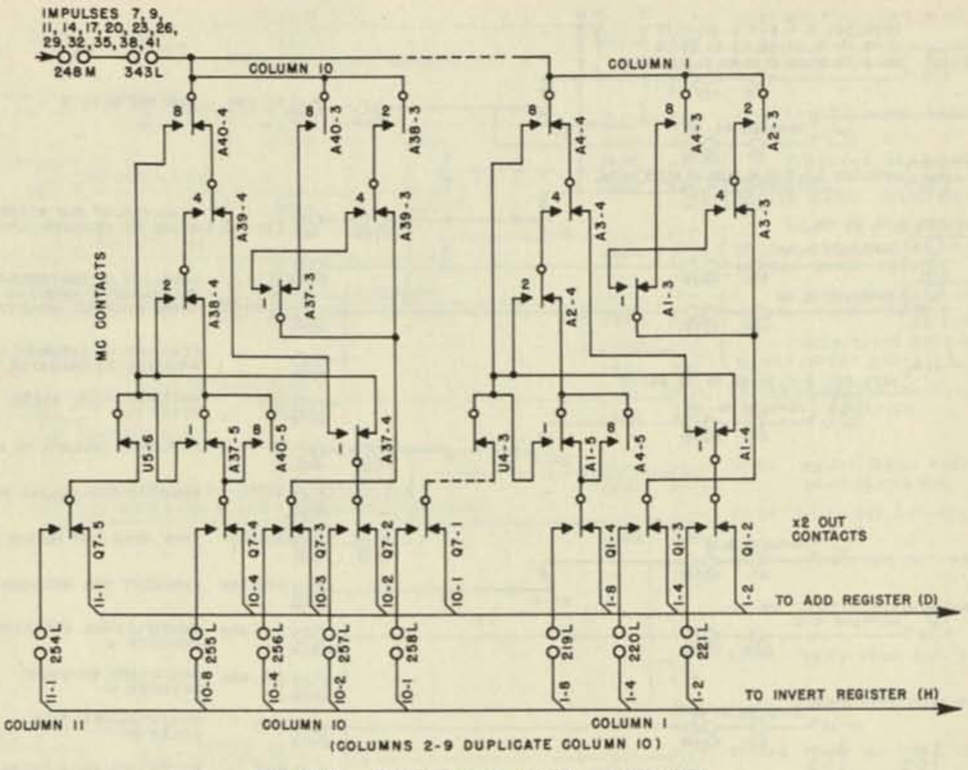

Fig. 5.8 - Times-two read-out circuit.

E1-E98, there are three groups of relays representing each machine column:

(1) a nine's carry and a ten's carry relay (cf. Fig. 2.6);

(2) relays 8, 6, 4, and 2, indicating the sum of the even parts of the two decimal digits being added (cf. Figs. 2.7 and 2.8a);

(3) relays (2) and 1 indicating the sum of the odd parts of the two decimal digits being added.

For example, in Fig. 2.8b the addition of the digits 7 and 3 will cause the relays E10, E8, C1, and D1 to be energized. In the multiplication unit relays E8 and E(2) will be energized. Similarly, in Fig. 2.8b, 5+4 picks up E9, E8, and C1, whereas the circuit of Fig. 5.11 will energize E9, E8, and E1.

(c) The multiplier is transferred from storage register 005, through the storage register out-relay contacts to the transfer buss, through the multiplier in-relay contacts to the multiplier register, B1-B47. The read-in circuit for the ten decimal digits is similar to the read-in of the augend to an addition unit (cf. Fig. 4.7). The read-in of the algebraic sign and of the exponent is shown in Fig. 5.9b.

(d) A multiple selector relay, X1, is energized through Y1-6, Fig. 5.2.

Impulse 9. (a) The multiplicand auxiliary register relays, AA1-AA30, are energized by a

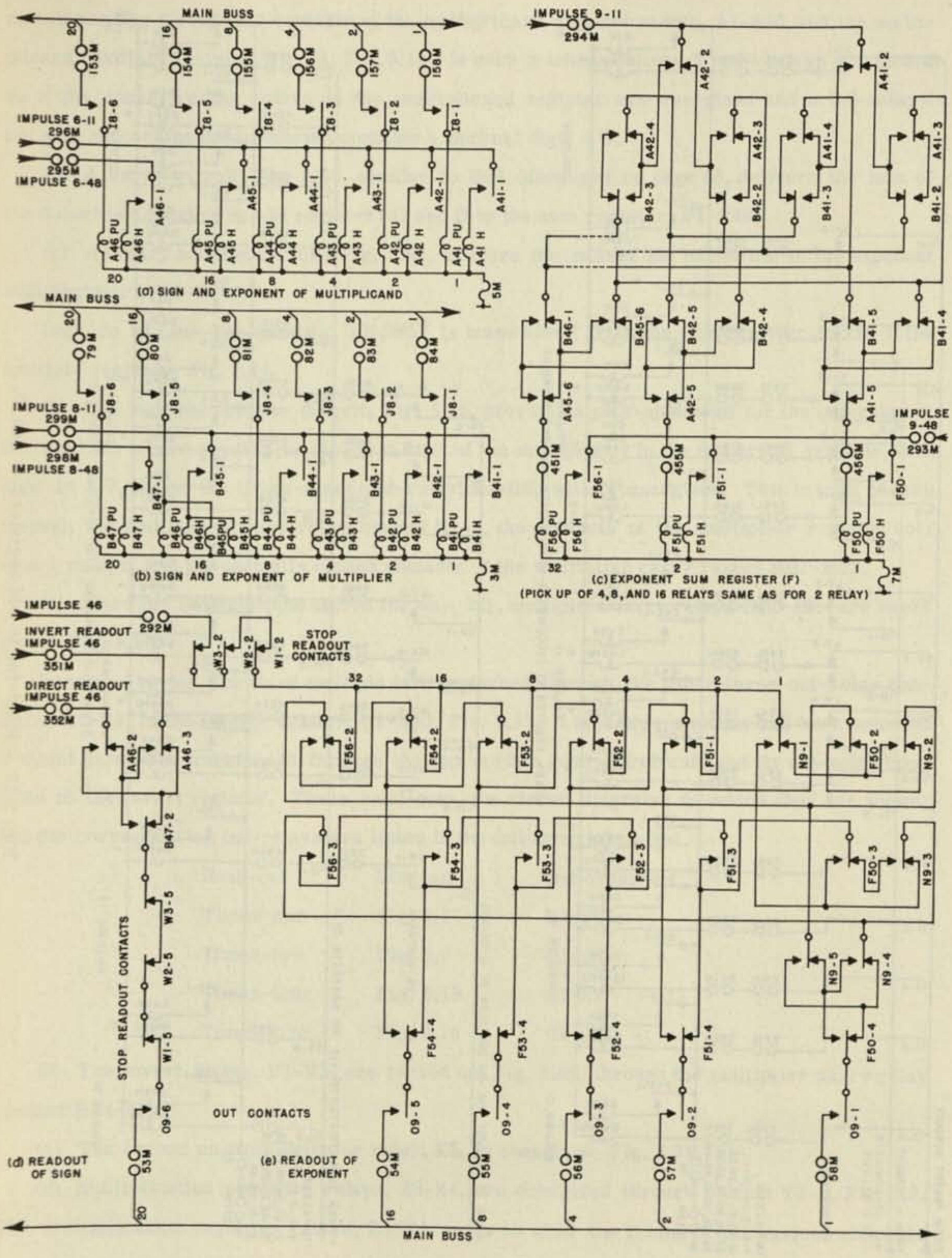

Fig. 5.9 - Exponent and sign circuits.

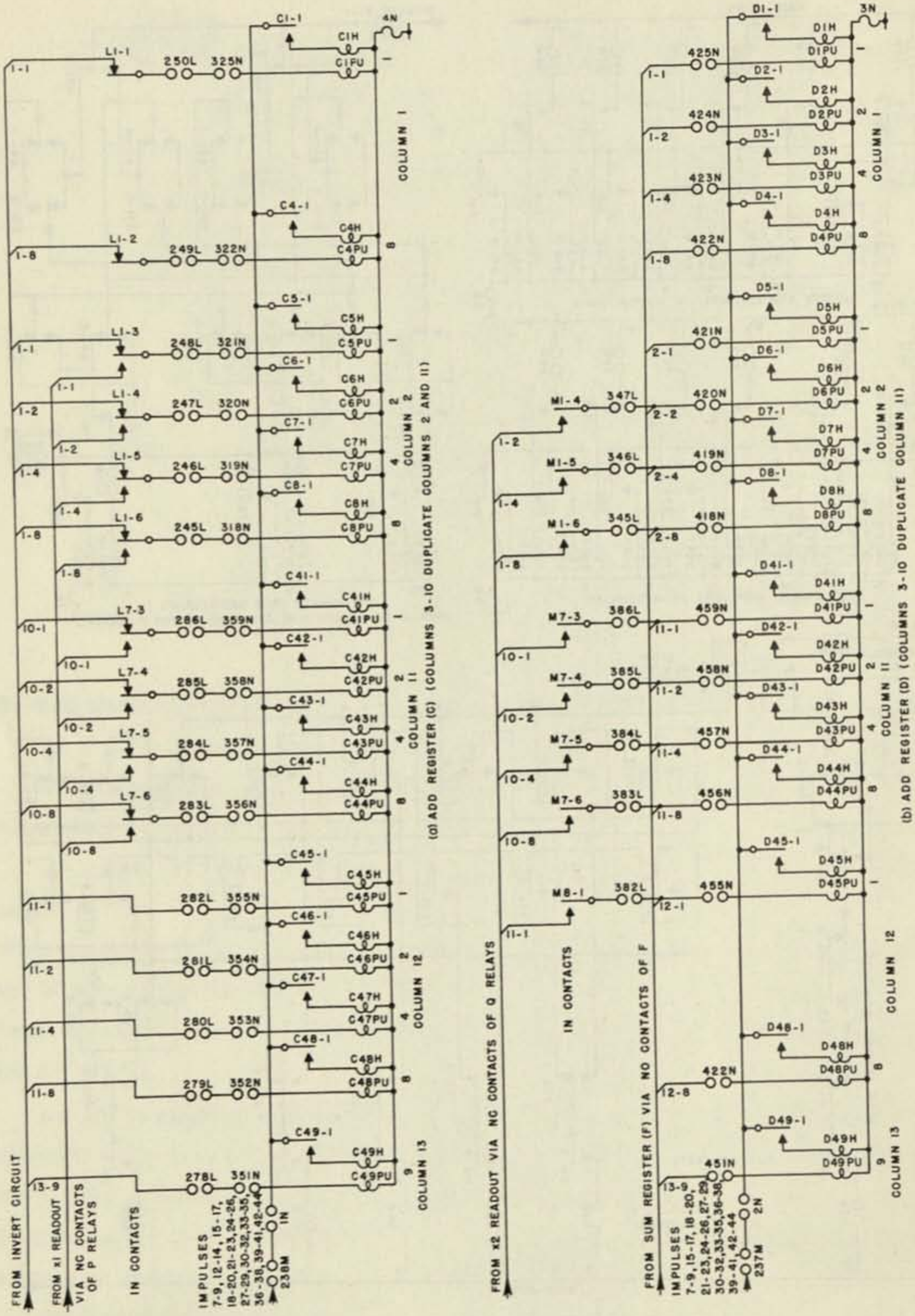

Fig. 5.10 - Read-ins to add registers C and D.

circuit passing through the contacts of the multiplicand register relays, A1-A40, and the multiplicand auxiliary in-relay, U1-U5, Fig. 5.12. In each machine column, 2 and 1 relays are picked up if the corresponding relays in the multiplicand register are energized and a 0.5 relay if the next succeeding lower column contains a decimal digit ≥ 5.

(b) A carry circuit, Fig. 5.13, similar to that discussed on page 48, delivers the sum of the quantities standing in add registers C and D to the sum register, F1-F49.

(c) A binary addition circuit, Fig. 5.9c, delivers the sum of the exponents to the exponent sum register, F50-F56.

Impulse 10. (a) The quantity 3 × *(MC)* is transferred from the sum register to the third multiple register, Fig. 5.14.

(b) The multiple selector circuit, Fig. 5.15, provides a pick-up circuit for the out-relay of the multiple corresponding to the first digit of the multiplier. In the numerical example, this digit is a 7, hence the times-three-out-relay, R1-R8, will be energized. This circuit passes through the multiple selector relay contact X1-3, the contacts of the multiplier register column 1 relays, and the normally closed contacts of the multiplier carry relays BB1-BB2.

(c) Since the first multiple called for was ≥ 5, multiplier carry relays BB3-BB4 are energized, Fig. 5.16.

Impulse 11. (a) The third multiple is transferred through the times-three-out-relay contacts, R1-R8, to the invert register, H1-H43, Fig. 5.17. If any other multiple had been selected it would have been transferred through the appropriate read-out circuit and its out-relay contacts to the invert register. These read-outs, the circuit diagrams in which they are shown, and the corresponding out-relays are listed in the following tabulation.

Read-out	Diagram	Out-relay
Times-one	Fig. 5.1	P1-P7
Times-two	Fig. 5.8	Q1-Q7
Times-four	Fig. 5.18	S1-S7
Times-five	Fig. 5.19	T1-T7

(b) The invert relays, V1-V5, are picked up, Fig. 5.20, through the multiplier carry relay contact BB4-6.

(c) The second multiple selector relay, X2, is energized, Fig. 5.21.

(d) Multiplication sequence relays, Z3-Z4, are energized through contact Y2-1, Fig. 5.2. The multiplication sequence relays, Z1-Z4, serve to alter the timing of the various elements employed in the addition procedure from that required to build up the third multiple to that required for the accumulation of the product.

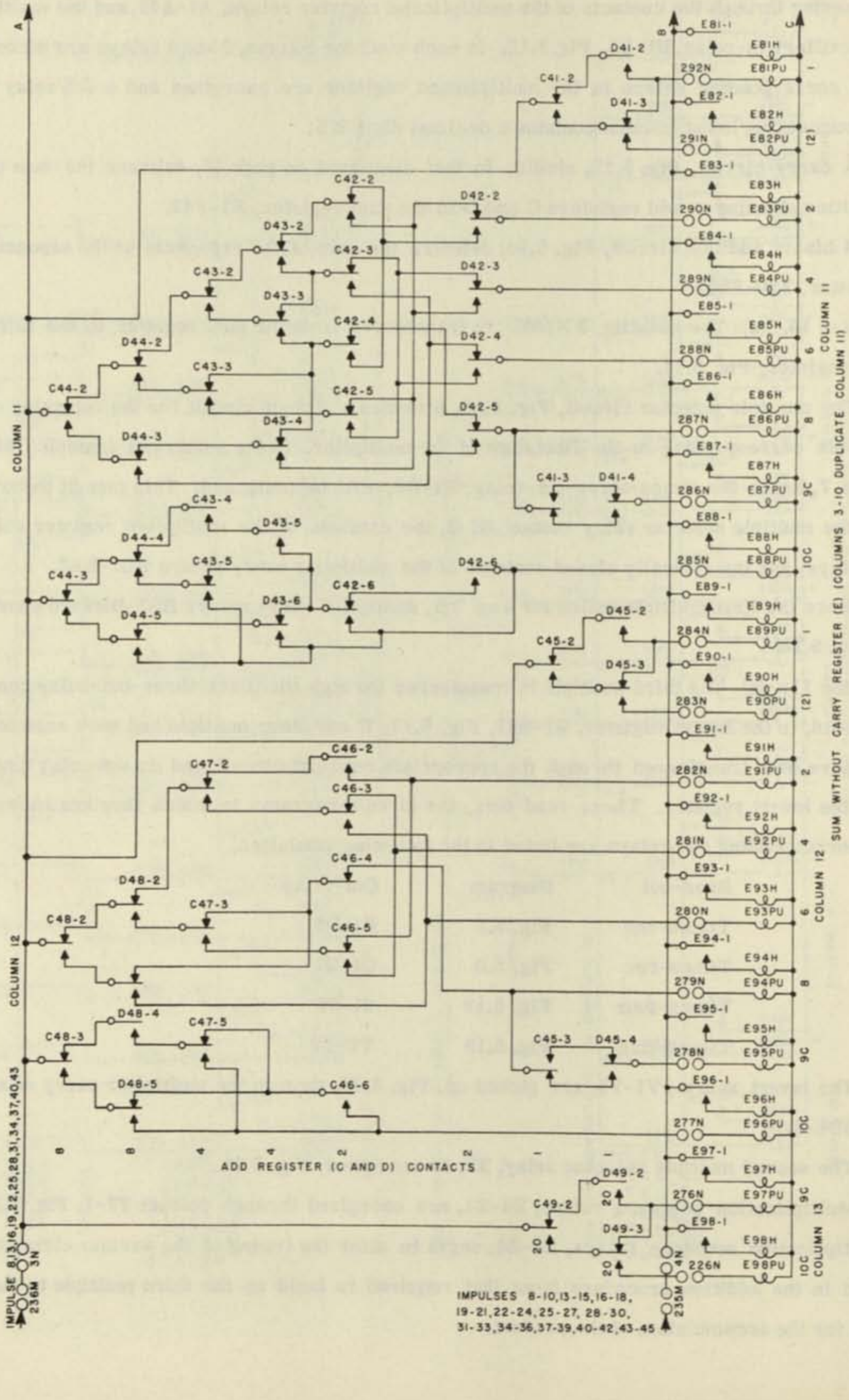

Fig. 5.11 - Sum-without-carry circuit.

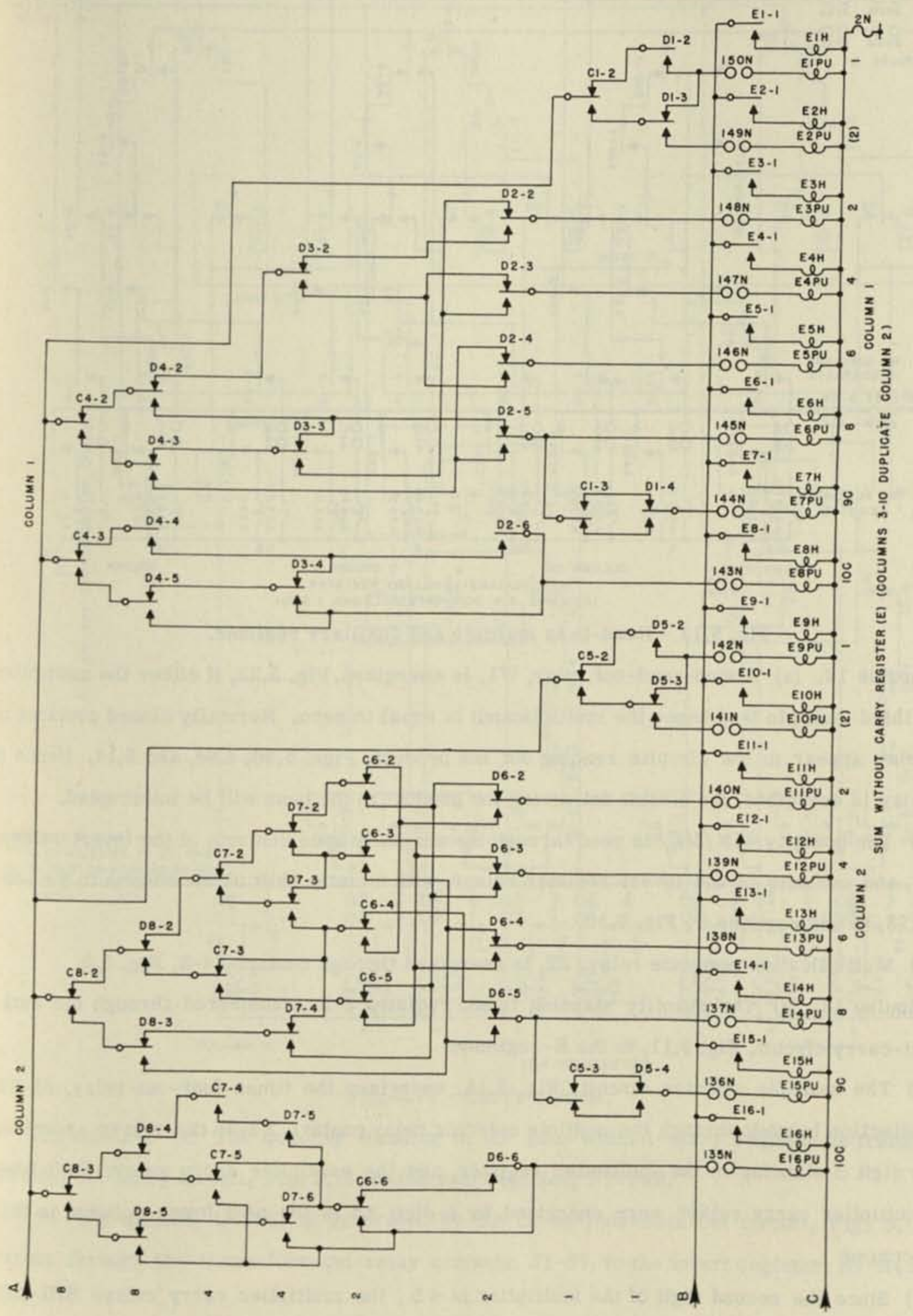

Fig. 5.11 continued - Sum-without-carry circuit.

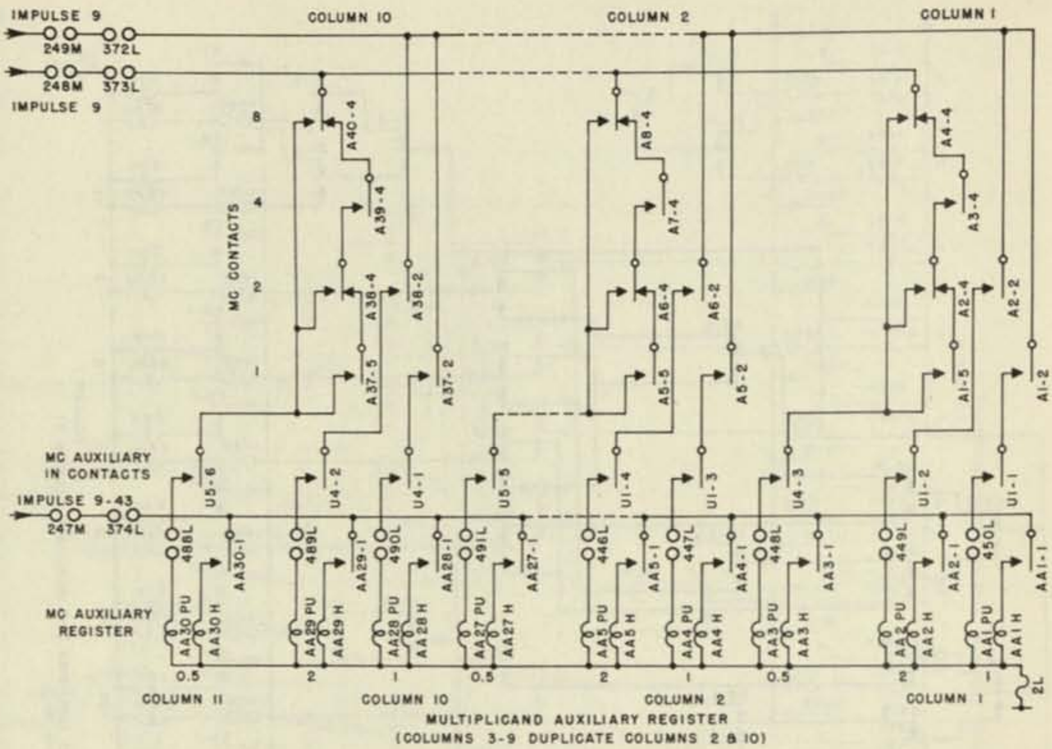

Fig. 5.12 - Read-in to multiplicand auxiliary register.

Impulse 12. (a) A stop-read-out relay, W1, is energized, Fig. 5.22, if either the multiplier or the third multiple (and hence the multiplicand) is equal to zero. Normally closed contacts of this relay appear in the circuits reading out the product, Figs. 5.9d, 5.9e, and 5.14. Hence if this relay is energized, the circuit delivering the product to the buss will be interrupted.

(b) The quantity $-3\times(MC)$ is read through the normally open contacts of the invert relays, V1-V5, and contacts of the invert register relays, with a static shift of one column to the left, Fig. 5.23, to add register C, Fig. 5.10.

(c) Multiplication sequence relay, Z2, is energized through contact Z4-2, Fig. 5.2.

Impulse 13. (a) The quantity standing in add register C is transferred through the sum-without-carry circuit, Fig. 5.11, to the E-register.

(b) The multiple selector circuit, Fig. 5.15, energizes the times-four-out-relay, S1-S7. This selection is made through the multiple selector relay contact, X2-3, the relays energized by the digit 3 standing in the multiplier register, and the multiplier carry relays BB3-BB4. The multiplier carry relays were energized by a digit ≥ 5 in the next lower column, in this case, column 1.

(c) Since the second digit of the multiplier is < 5, the multiplier carry relays BB1-BB2 are not energized, Fig. 5.16.

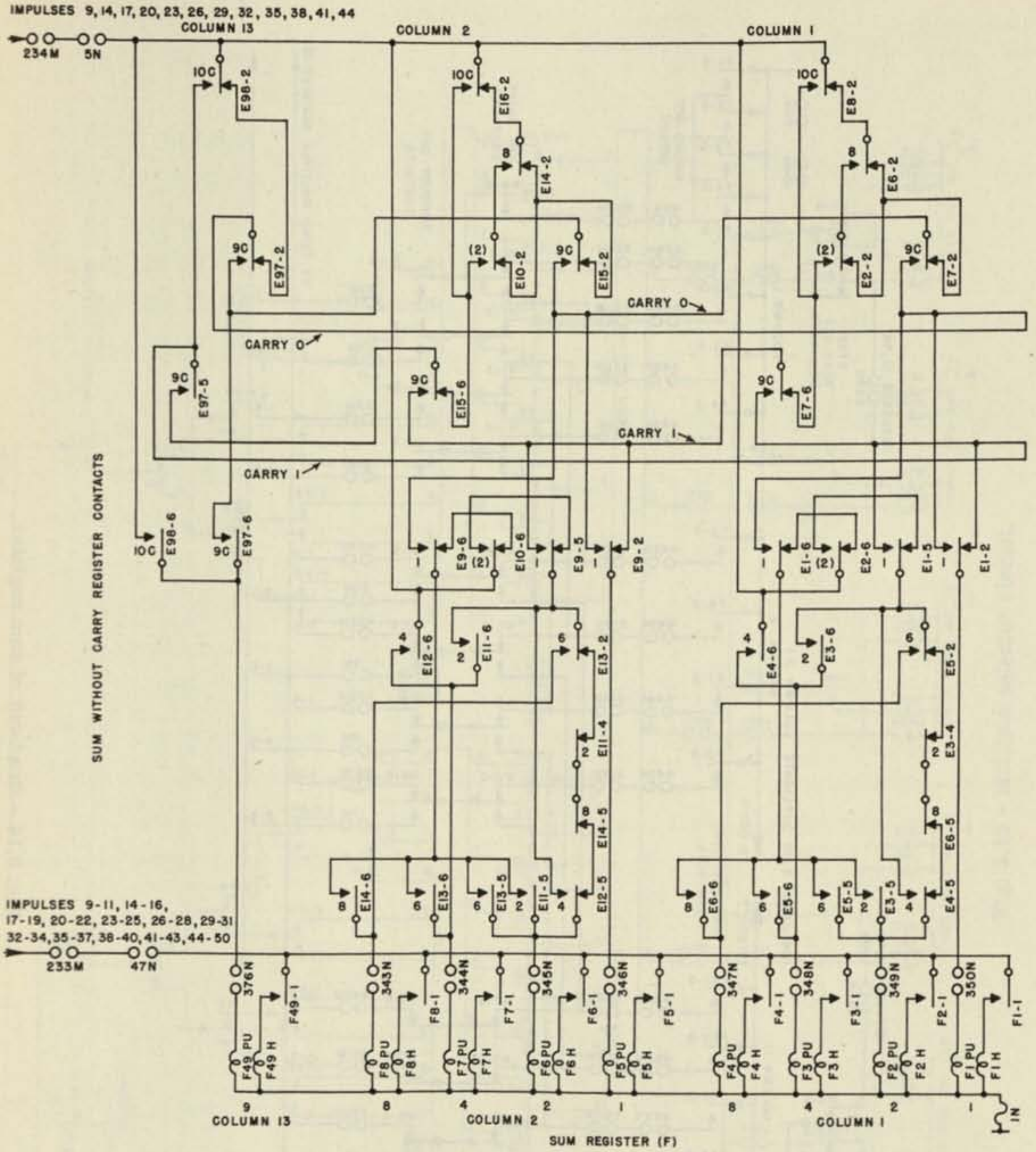

Fig. 5.13 - Carry circuit.

Impulse 14. (a) The quantity standing in the sum-without-carry register is transferred through the carry circuit, Fig. 5.13, to the sum register, F1-F49.

(b) The quantity 4×*(MC)* is generated by the times-four-read-out circuit, Fig. 5.18, and passes through the times-four-out-relay contacts, S1-S7, to the invert register, H1-H43, Fig. 5.17.

(c) The invert relays, V1-V5, are not energized since none of the multiplier carry relays,

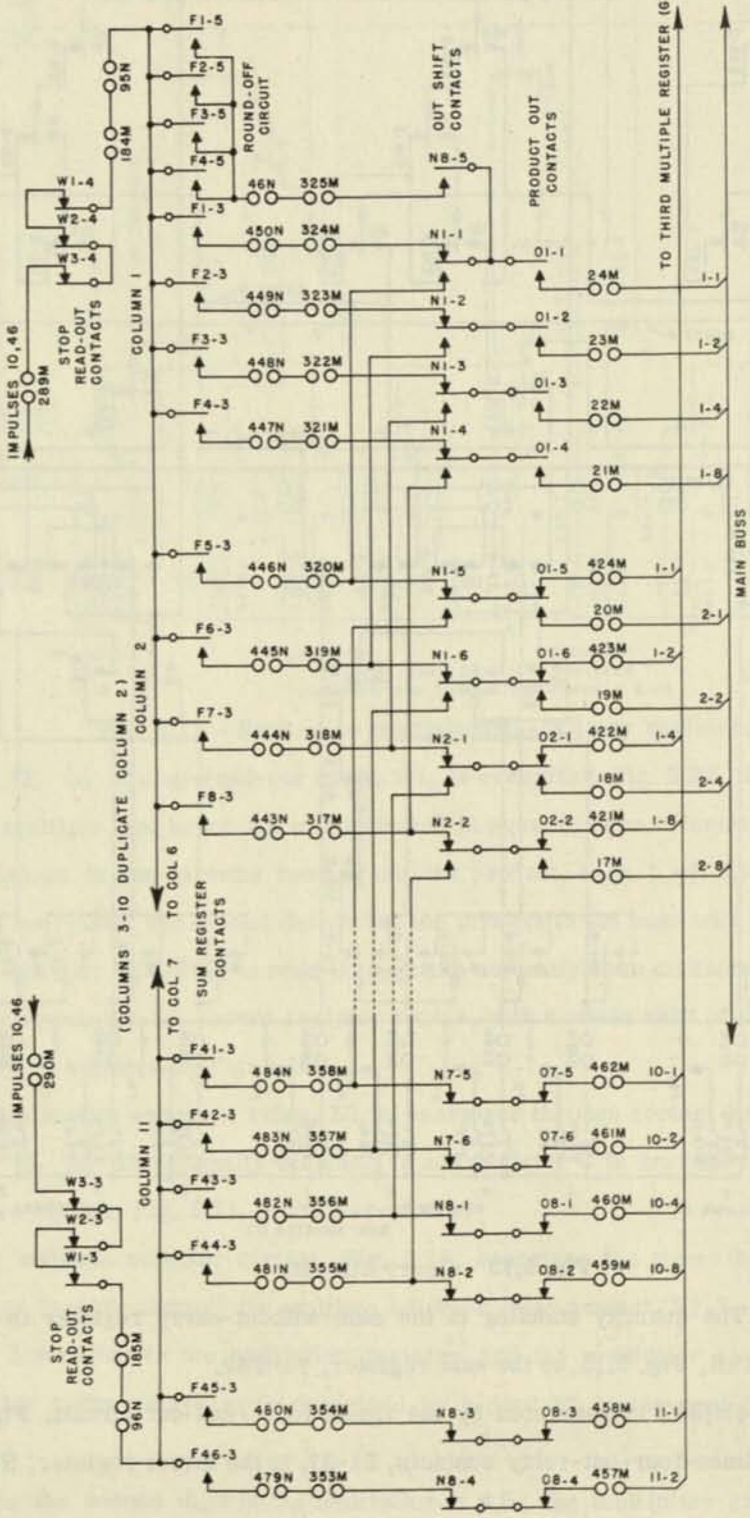

Fig. 5.14 - Read-out of sum register.

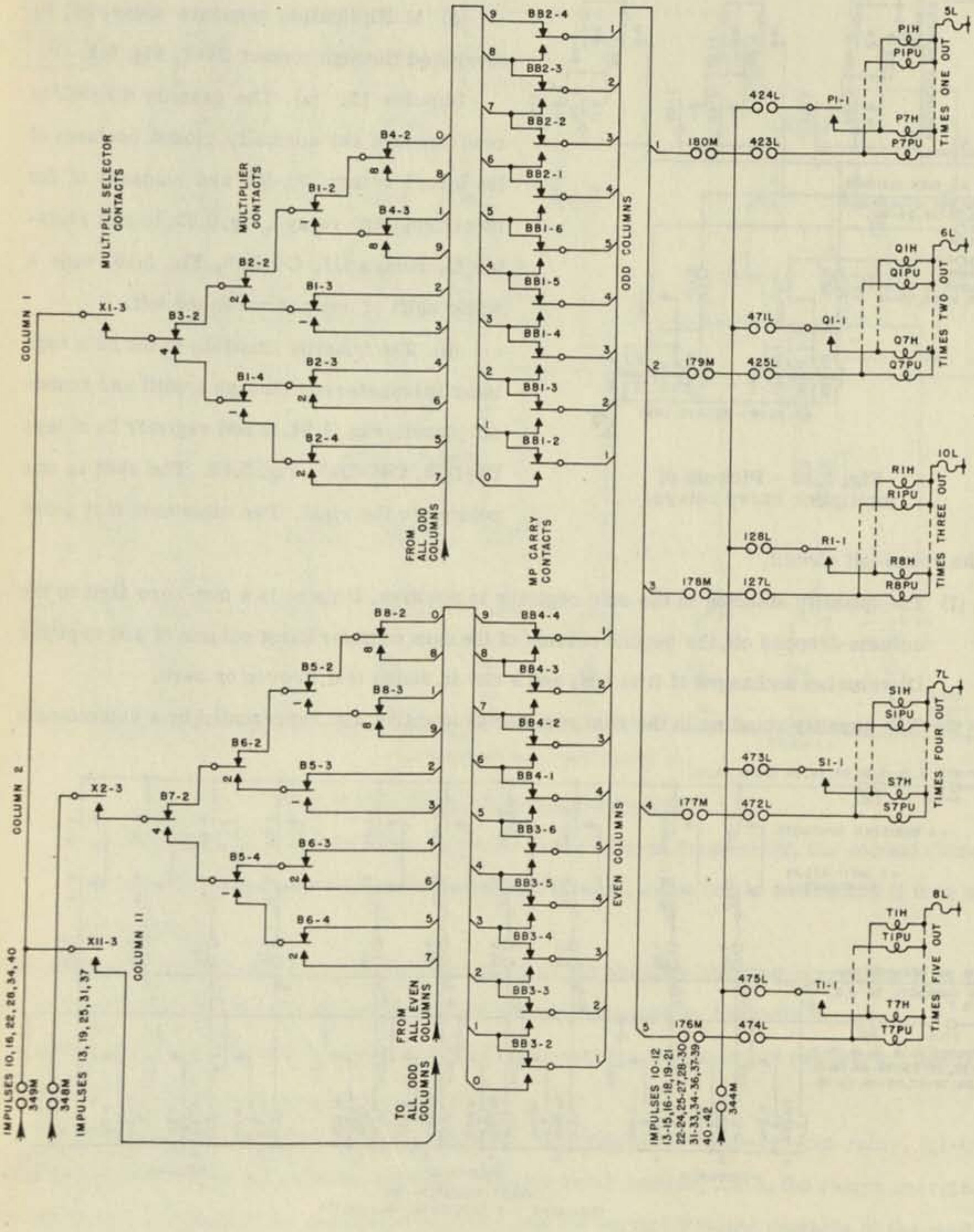

Fig. 5.15 - Multiple selector circuit.

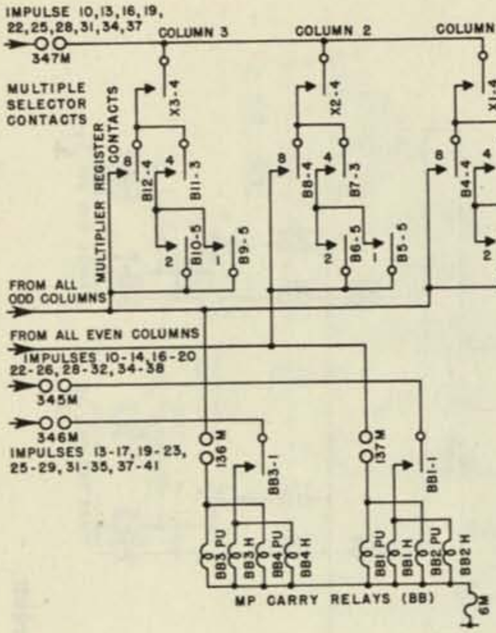

Fig. 5.16 - Pick-up of multiplier carry relays.

BB1-BB4, are energized.

(d) The third multiple selector relay, X3, is energized, Fig. 5.21.

(e) Multiplication sequence relay, Z1, is energized through contact Z4-4, Fig. 5.2.

Impulse 15. (a) The quantity $4\times(MC)$ is read through the normally closed contacts of the invert relays, V1-V5, and contacts of the invert register relays, Fig. 5.23, to add register C, relays C1, C4-C49, Fig. 5.10, with a static shift of one column to the left.

(b) The quantity standing in the sum register is transferred through a shift and round-off circuit, Fig. 5.24, to add register D, relays D1-D45, D48-D49, Fig. 5.10. The shift is one column to the right. Two situations may arise in the round-off circuit.

(1) The quantity standing in the sum register is positive. If there is a non-zero digit in the column dropped off, the second column of the sum register (first column of add register D) remains unchanged if it is odd, and a one is added if it is even or zero.

(2) The quantity standing in the sum register is negative and represented by a complement

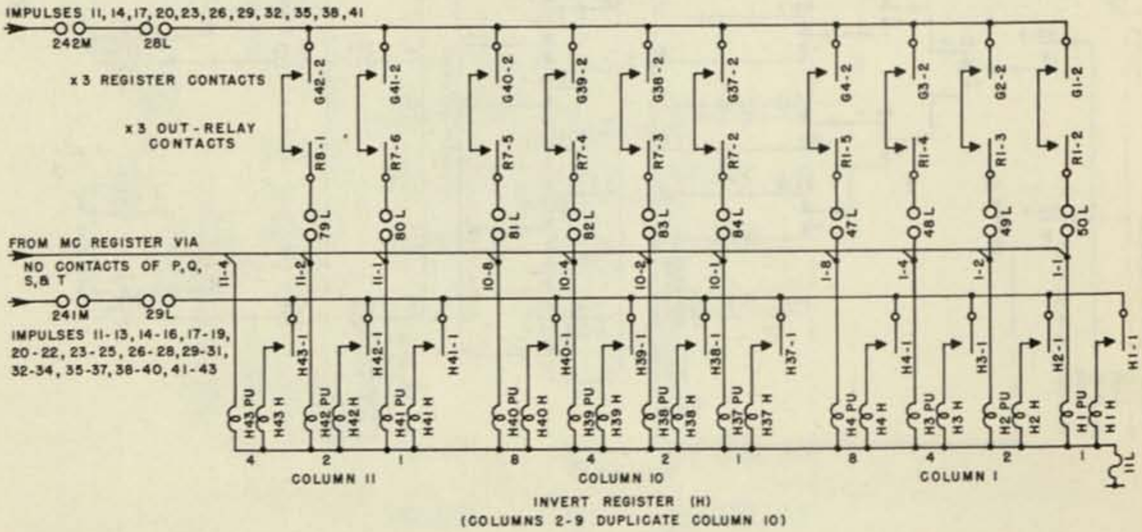

Fig. 5.17 - Read-in to invert register.

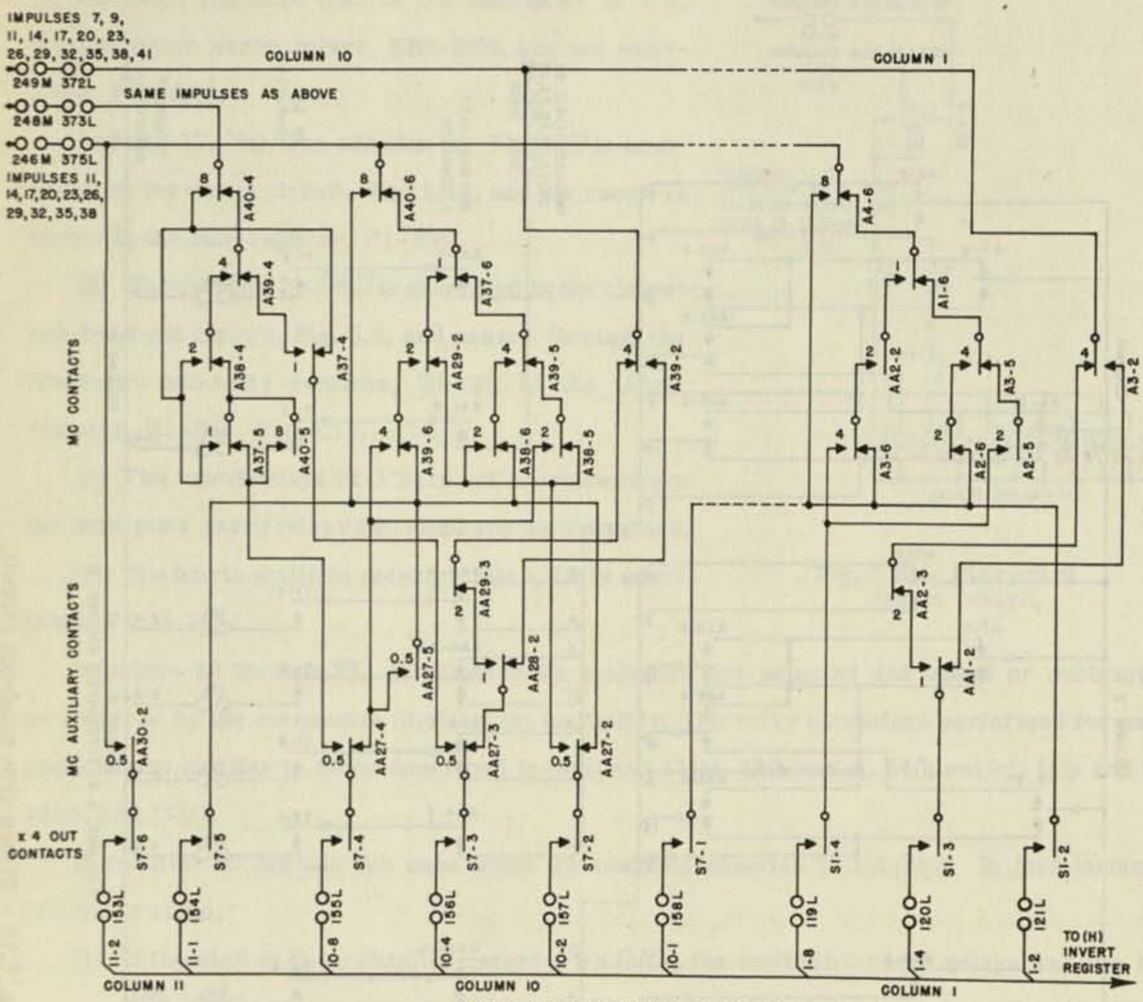

Fig. 5.18 - Times-four-read-out circuit.

on nine. If there is a digit other than nine in the column dropped off, the second column of the sum register remains unchanged if it is even, and a one is subtracted if it is odd or a nine.

Obviously, the effect on the positive absolute value of the quantity standing in register F is the same in either case. The round-off procedure will be discussed in Appendix II.

Impulse 16. (a) The sum-without-carry of the quantities stored in add registers C and D is delivered to register E, Fig. 5.11.

(b) The multiple selector circuit, Fig. 5.15, energizes the times-two-out-relay, Q1-Q7. This selection is made through the multiple selector relay contact, X3-3, the relays energized by the digit 2 standing in the multiplier register, and the normally closed contacts of the multiplier carry relays, BB1-BB2.

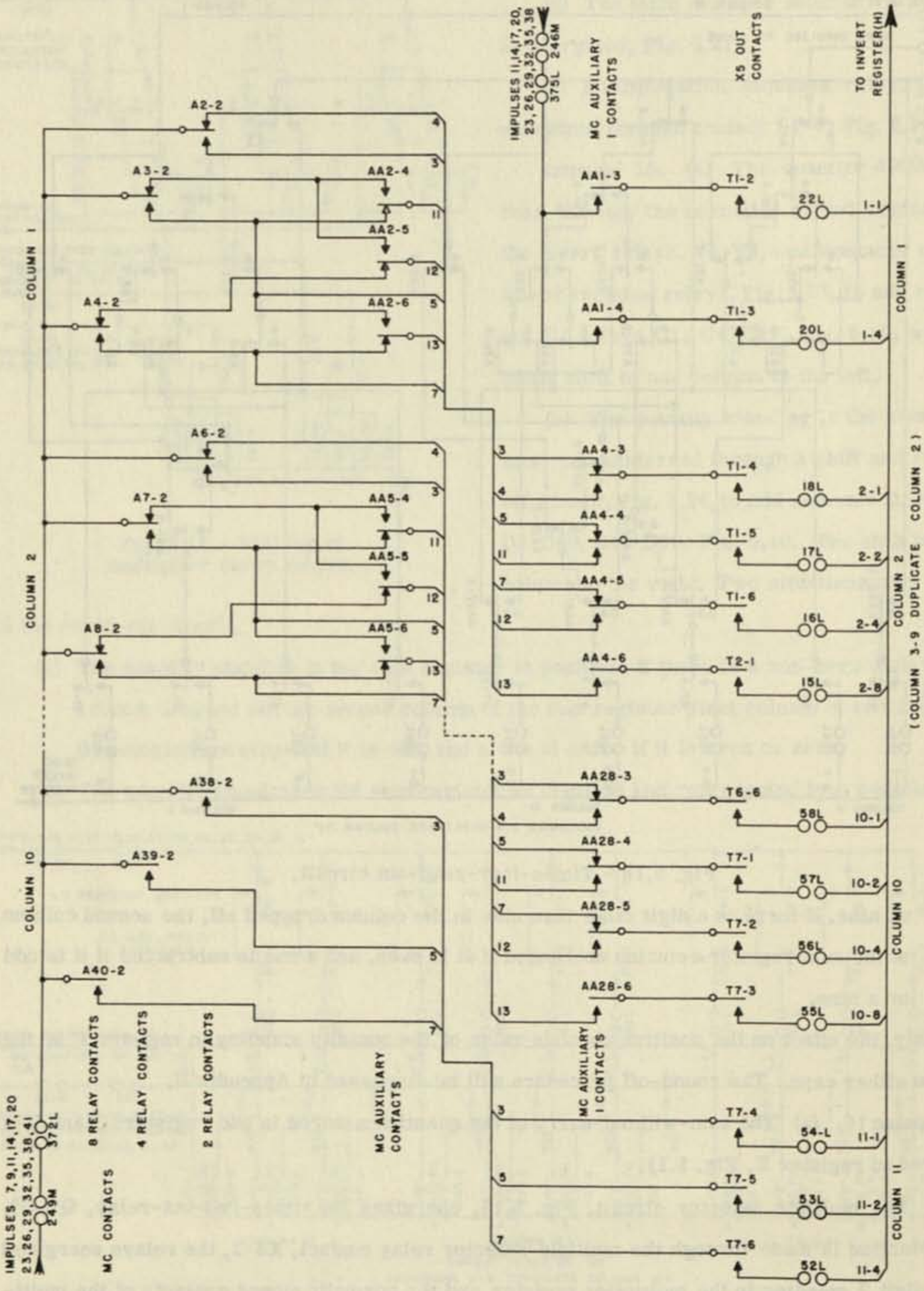

Fig. 5.19 - Times-five read-out circuit.

(c) Since the third digit of the multiplier is <5, the multiplier carry relays, BB3-BB4, are not energized, Fig. 5.16.

Impulse 17. (a) The addition of $-3\times(MC)$ is completed by the carry circuit, Fig. 5.13, and the result is stored in the sum register, F1-F49.

(b) The quantity $2\times(MC)$ is generated by the times-two-read-out circuit, Fig. 5.8, and passes through the times-two-out-relay contacts, Q1-Q7, to the invert register, H1-H43, Fig. 5.17.

(c) The invert relays V1-V5 are not energized since the multiplier carry relays BB1-BB2 are not energized.

(d) The fourth multiple selector relay, X4, is energized, Fig. 5.21.

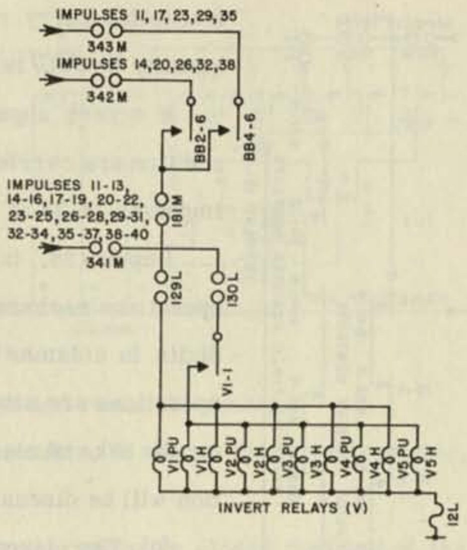

Fig. 5.20 - Pick-up of invert relays.

Impulses 18 through 37. (a) Eight more multiples are selected and added or subtracted as required by the successive digits of the multiplier. The relay operations performed for each multiple are similar to those described in impulses 11(c), 13(b and c), 14(b and c), 15(a and b), 16(a), and 17(a).

It remains to discuss the case when the multiple selected is $5\times(MC)$. In this instance two cases arise.

(1) If the digit of the multiplier calls for $5\times(MC)$, the multiplier carry relays and the invert relays are energized, the quantity is subtracted, and the multiple next selected is one greater than that indicated by the multiplier (cf. impulse 19 of Fig. 5.6).

(2) If the digit of the multiplier is 4 and a digit ≥ 5 appeared in the next lower column, the

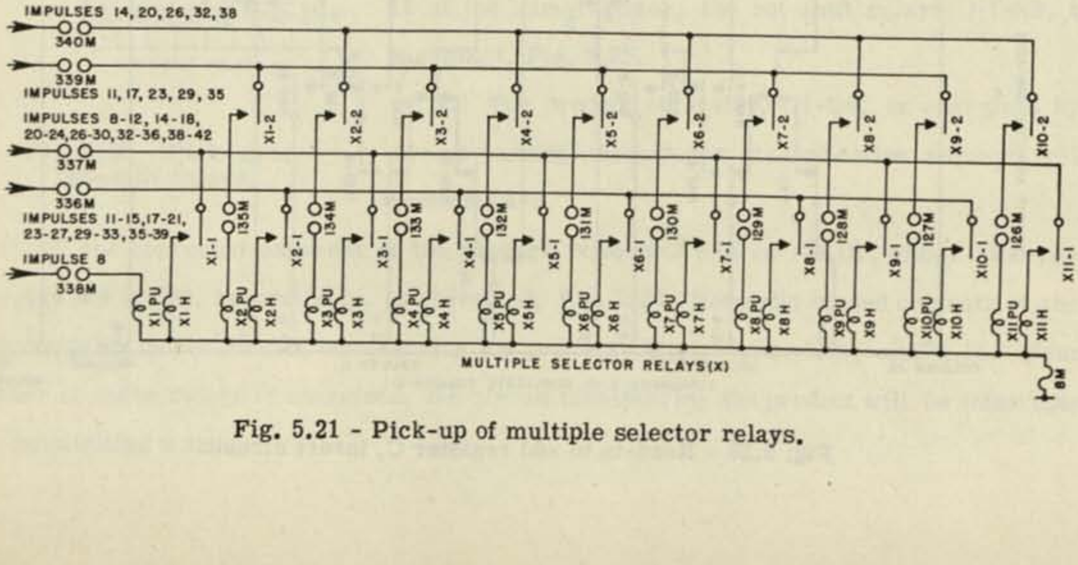

Fig. 5.21 - Pick-up of multiple selector relays.

multiplier carry relays and the invert relays are not energized, and the quantity 5×*(MC)* is added (cf. impulse 22 of Fig. 5.6).

If a zero appears in the multiplier, all of the steps of selection and addition are carried out under the fixed timing of the unit, as for example, impulses 34-38 of Fig. 5.6.

Impulse 38. (a) During this impulse and succeeding impulses, the relay operations necessary to the accumulation of the multiples called for by the digits in columns 9 and 10 of the multiplier are in progress. Since these operations are similar to those previously described, they will be omitted for the sake of clarity, and only the operations terminating the multiplication will be discussed.

(b) The eleventh multiple selector relay, X11, is energized, Fig. 5.21, to prepare for the addition of 1×*(MC)* if the digit standing in column 10 of the multiplier is ≥5, as in the numerical example.

Impulse 39. (a) No terminating operations are performed in this impulse.

Impulse 40. (a) The multiple selector circuit, Fig. 5.15, energizes the times-one-out-relay, P1-P7. This selection is made through the multiple selector relay contact X11-3 and BB1-2 normally open. Relay BB2 was energized because of the 6 in column 10 of the multiplier.

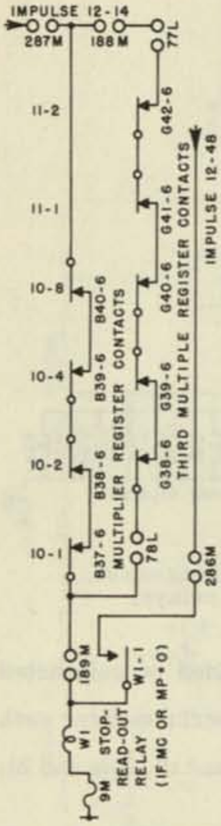

Fig. 5.22 - Stop read-out relay.

Impulse 41. (a) The quantity 1×*(MC)* is read from the contacts of the multiplicand reg-

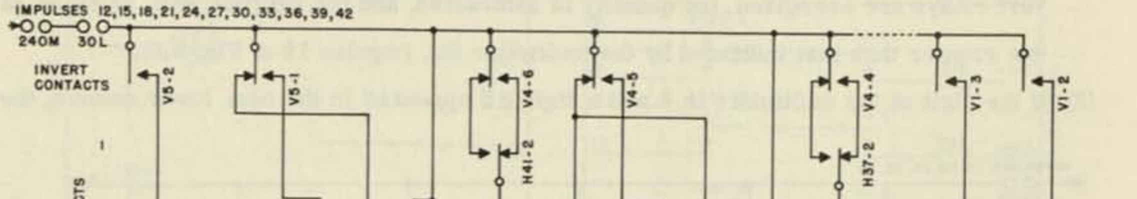

Fig. 5.23 - Read-in to add register C, invert circuit.

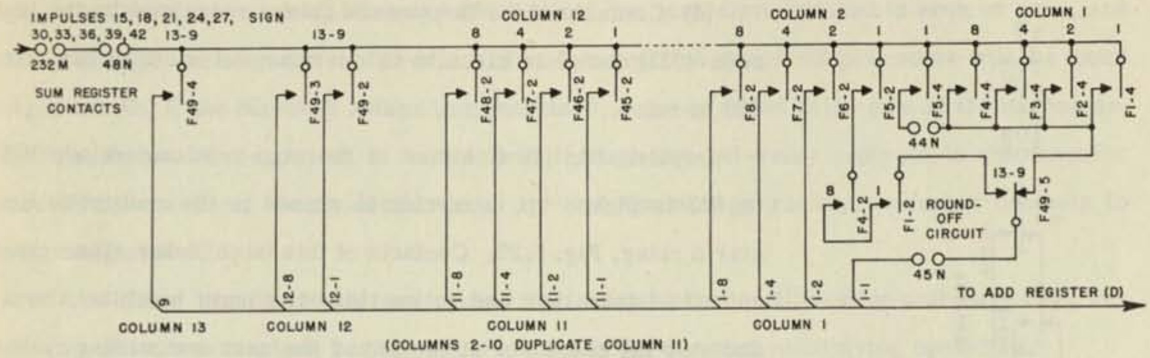

Fig. 5.24 - Read-in to add register D, shift and round-off circuit.

ister relays, Fig. 5.1, through the times-one-out-relay contacts, P1-P7, to the invert register, H1-H43, Fig. 5.17.

Impulse 42. (a) The quantity $1 \times (MC)$ is read through the normally closed contacts of the invert relays, V1-V5, and contacts of the invert register relays, Fig. 5.23, to add register C, Fig. 5.10, with a static shift of one column to the left.

(b) The quantity standing in the sum register is transferred through the shift and round-off circuit, Fig. 5.24, to add register D, Fig. 5.10.

Impulse 43. (a) The sum-without-carry of the quantities stored in add registers C and D is delivered to register E, Fig. 5.11.

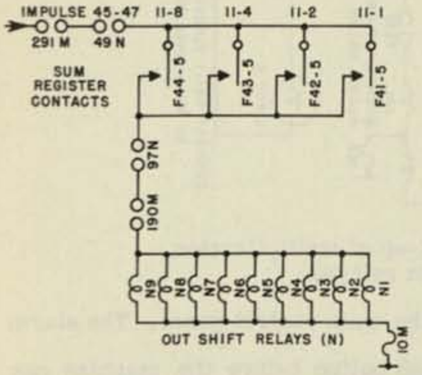

Fig. 5.25 - Pick-up of out-shift relays.

Impulse 44. (a) The addition of the last multiple is completed by the carry circuit, Fig. 5.13, and the result is delivered to the sum register, F1-F49. It should be noted (timing diagram, Fig. 5.5) that the F-register relays remain energized until the end of impulse 50.

Impulse 45. (a) If a non-zero digit appears in column 11 of the sum register, the out-shift relays, N1-N9, are energized, Fig. 5.25.

(b) The product out-relay, O1-O9, is energized by a circuit passing through the multiplication sequence relay contact Z4-3.

(c) If the corrected exponent of the product is to be $>+15$ or <-15, either stop-read-out-relay W2 or W3, respectively, is energized, Fig. 5.26. Normally closed contacts of these relays appear in the circuit transferring the product, Figs. 5.9d, 5.9e, and 5.14. Hence, if either of these relays is energized, the circuit transferring the product will be interrupted, thus substituting a zero.

(d) Contacts of the in-pyramid relays energized by the in-code (023) complete circuits to energize the storage register 023 in-relay.

Impulse 46. (a) If either of the stop-read-out relays W2 or W3 is picked up, a circuit is closed to the multiplication alarm relay, Fig. 5.27. Contacts of this latch relay close circuits to light a light and to energize the main machine alarm and stop the calculator at the end of the next succeeding cycle. Either alarm circuit, for exponent > + 15 or < − 15, may be cut off by a toggle switch on the main control panel. The alarm circuit must be reset by a push button before the machine can continue in operation.

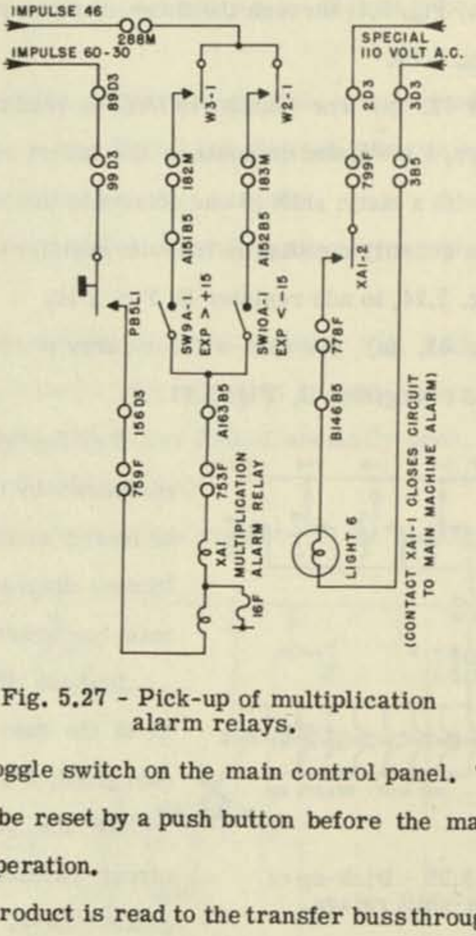

Fig. 5.27 - Pick-up of multiplication alarm relays.

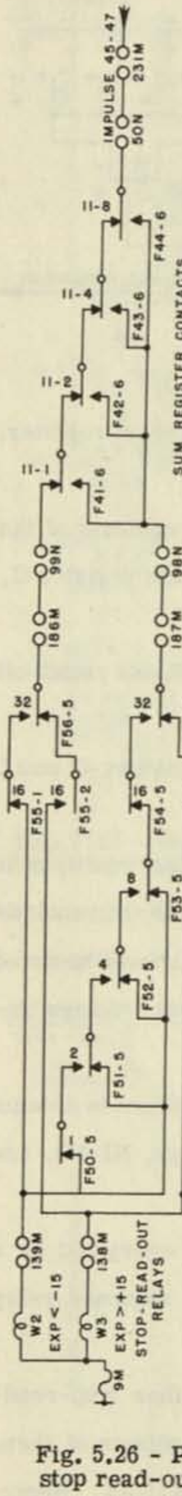

Fig. 5.26 - Pick-up of stop read-out relays.

(b) The product is read to the transfer buss through several circuits. The algebraic sign is determined as shown in Fig. 5.9d, and read through the out-relay contact. The ten decimal digits are read, Fig. 5.14, through the out-shift circuit and the out-relay contacts to the main buss. If the out-shift relays are energized by a digit in column 11 of the sum register, the product is shifted one column to the right. If the digit dropped off to the right is not zero, a round-off circuit adds a one if the last digit retained is even or zero, and leaves the digit unchanged if it is odd. A discussion of this round-off procedure will be found in Appendix II. If the out-shift relays are energized, a one is added to the sum of the exponents, Fig. 5.9e, before the exponent is transferred through the out-relay contacts to the transfer buss. From the buss, the product is read through the storage register in-relay contacts to storage register 023.

At the end of impulse 50, all relays and registers of the multiplication unit have been returned to their de-energized positions and are ready for the next multiplying operation.

CHAPTER VI

SEQUENCING AND CONTROL

The four sequence mechanisms read coded instructions from perforated paper tapes (cf. page 37) and transmit them to the calculator. By means of a sprocket drive wheel, the tape is pulled through a reading device called a pin-box. This reads, at one time, ten lines of coding, each line being represented by three rows of six holes each. Thus the pins must sense for 180 holes at one time and must repeat this operation three times every second. The pins are mechanically linked to silver ferrules which make contact with a set of silver bars acting as common conductors connected to one terminal of the generator. Thus circuits are closed to energize relays, called pin relays, in the same distribution as the holes in the tape. During the interval between the reading of one set of ten instructions and the next, the tape is advanced into the proper position by the intermittent drive.

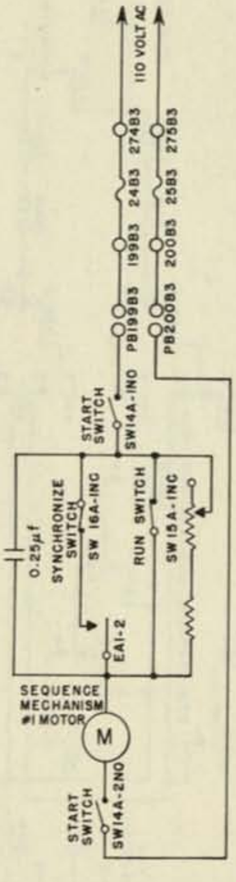

Fig. 6.1- Sequence mechanism motor.

The sequence mechanisms are interchangeable, and a spare is provided for maintenance purposes. Each mechanism is mounted on a sliding tray fitting into a panel on the main control board. The front of each mechanism, Plate XXII, consists of a panel set flush with the front of the machine itself when the unit is in position. The bakelite portion of the panel contains 207 jacks for the plug-wires by which the unit is electrically connected to the calculator.

Each of the five mechanisms is driven by a 1/4 horsepower, 1800 r.p.m. synchronous motor. The sequence mechanisms must be synchronized with the cam unit, and therefore with each other, before the calculator can be set in operation. Not only must the motors be synchronized, but also the 60 r.p.m. cam shafts and the sequence mechanism drive shafts must operate in phase. For this reason, two commutators, A and B, Plate XXIII, are provided on each sequence mechanism, together with corresponding elements on the cam unit drive.

Commutator A is mounted around the high speed shaft of the sequence mechanism drive motor, and consists of one common ring and one ring divided into four segments. Commutator B

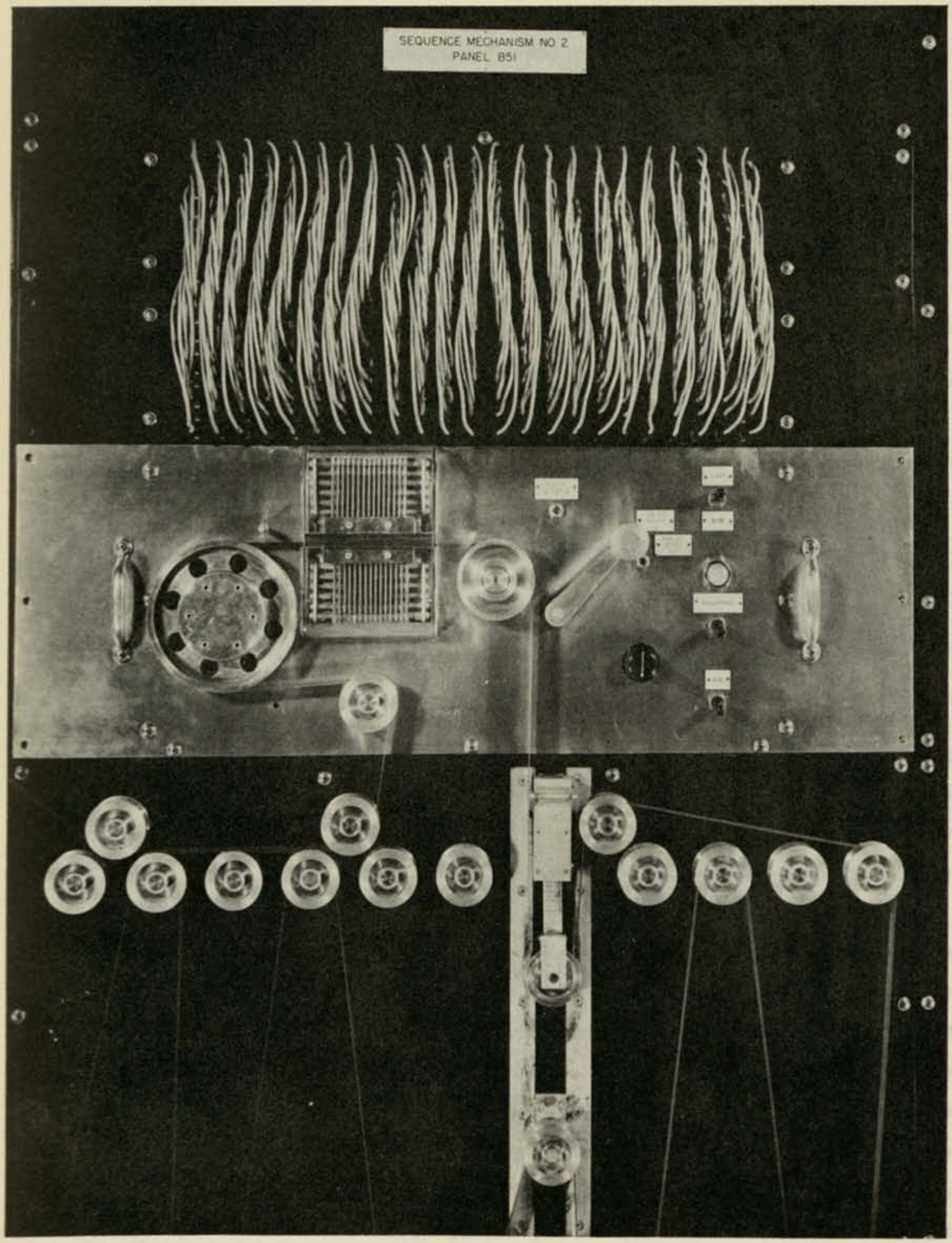

Plate XXII Sequence Mechanism

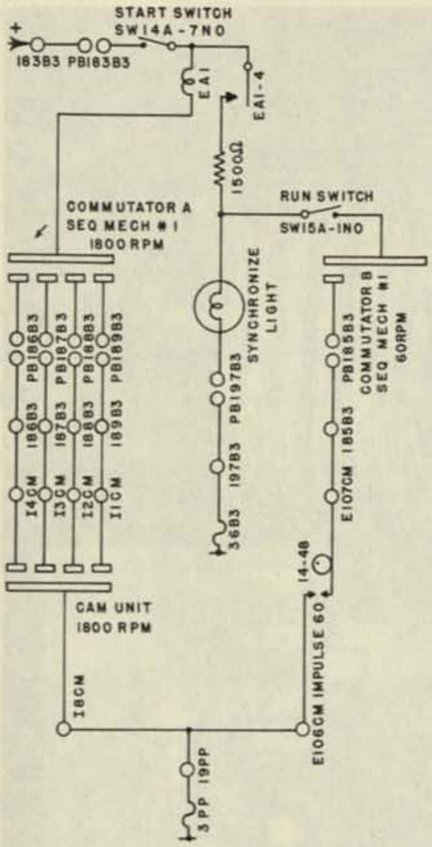

Fig. 6.2 - Phasing circuit.

is mounted on the 60 r.p.m. shaft. It consists of an inner common ring and an outer ring containing one large segment of 342 degrees of arc and a smaller segment of 12 degrees of arc. Both commutators have brush holders mounted on and insulated from their respective shafts forming electrical bridges between the inner and outer rings.

When the start switch C is closed, the sequence mechanism drive motor is connected to the line through a normally closed contact of the run switch D, Fig. 6.1, and operates at synchronous speed. When the run switch is operated, a variable resistance is connected in series with the motor, thus reducing the applied voltage and causing the motor to slip. A sensing circuit, Fig. 6.2, through commutator A and a similar commutator on the shaft of the cam unit motor will energize relay EA1 when the sequence mechanism motor has slipped into phase with the synchronously operating cam unit.

As soon as relay EA1 is energized, circuits are closed through EA1-4 to light the synchronize light, Fig. 6.2, and to shunt the variable resistance through EA1-2, Fig. 6.1, thus allowing the motor to run at synchronous speed.

It remains then to synchronize the slow speed shafts. The synchronize switch E is held in the on position until the synchronize light goes out, and then immediately dropped, with the result that the variable resistance is momentarily connected in series with the motor, Fig. 6.1, permitting it to slip one pole. This procedure is repeated until a cam-controlled contact (14-48) and commutator B, and consequently their respective shafts, are in phase, Fig. 6.2. The synchronize light is then shorted out once every second producing a pulsing effect, indicating that the phasing operation has been completed and the unit is prepared to operate the calculator.

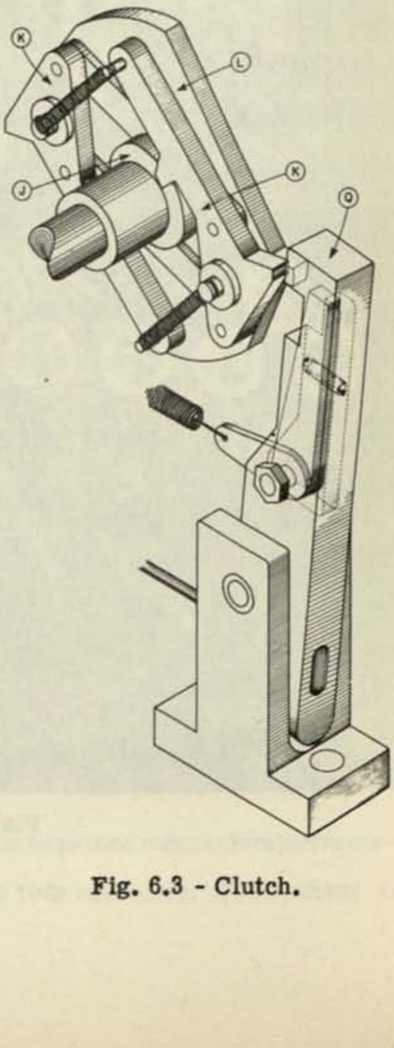

Fig. 6.3 - Clutch.

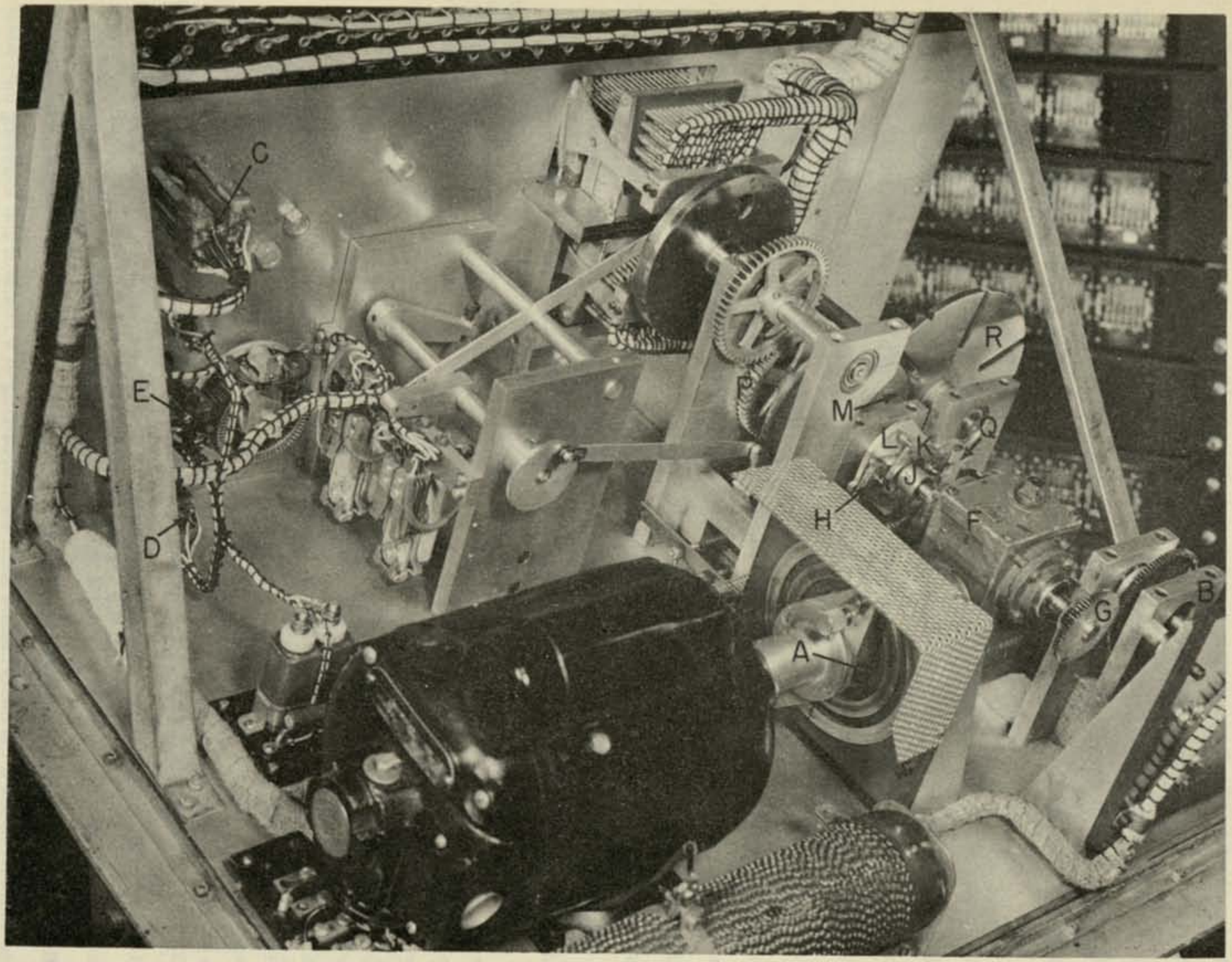

Plate XXIII Sequence Mechanism: interior view

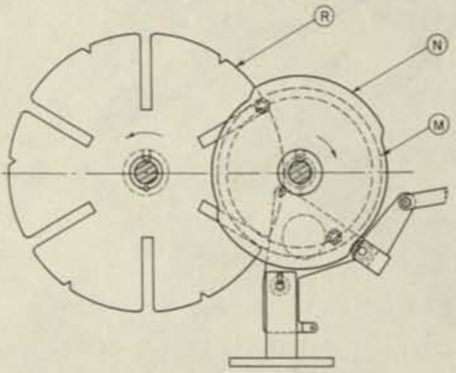

Fig. 6.4 - Geneva gear and detent.

The synchronous drive is connected to the sequence mechanism through the reduction gear F, Plate XXIII, having a reduction of 20:1. The low speed shaft of the reduction unit extends on either side of the housing at right angles to the motor shaft. The gears G, at the right of the reduction unit, supply a further reduction of 3:2 to drive the slow speed commutator B, previously described.

The left-hand shaft extension drives the sequence mechanism proper by means of a modified single-revolution clutch H, Plate XXIII. This clutch, Fig. 6.3, is operated by a solenoid and consists of a driving member J having a notch in its periphery to receive either of the pawls K, which are mounted on the driven member L and connected by a parallel linkage. The driven member is mounted on the shaft carrying the geneva drive wheel M, the detent cam N, and the gear P. Reference to Fig. 6.3 should make clear the operation of the solenoid controlled latch Q, which not only serves to disengage the clutch but also to stop and lock it in the disengaged position. When the clutch is engaged by energizing the clutch magnet, the retraction of the latch mechanically opens a normally closed limit switch, cutting in a resistor and lowering the voltage to the coil of the clutch magnet, Fig. 6.15.

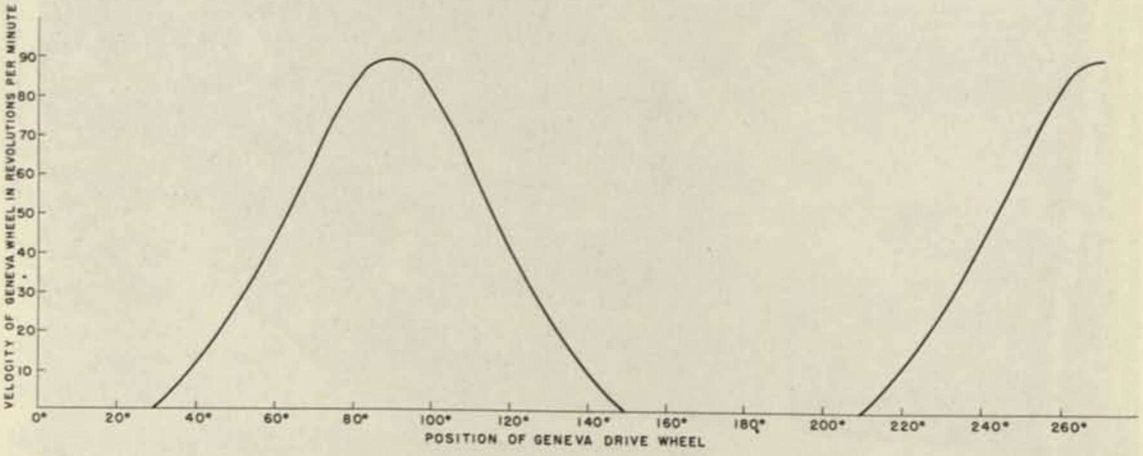

Fig. 6.5 - Velocity of geneva wheel

The geneva drive wheel M and the detent cam N are mounted on the same shaft as the clutch. On a parallel shaft are mounted the geneva wheel R and, on the front of the panel, the tape drive sprocket drum. Either of two pins on the geneva drive wheel may engage the geneva wheel in any one of six slots, Fig. 6.4, to provide the intermittent motion required to advance the sequence control tape. The velocity of the geneva wheel varies between zero and 90 r. p. m., Fig. 6.5. When the tape is at rest, the geneva wheel and sprocket wheel must not move due to any tension in the tape. Hence as the driving pin leaves the geneva wheel, the detent cam N, Fig. 6.4, allows the detent to drop into a notch on the geneva wheel locking it in position. The detent is pulled away by the cam as a driving pin again engages the wheel.

The gear P, Plate XXIII, drives a second gear (direct 1:1 ratio) on the pin-box cam shaft. The pin-box cam has two depressions each allowing the tape-reading pins to drop into reading position during the rest period of the geneva wheel. This cam consists of two functioning parts: the first is an operating cam cut on the inner diameter to the proper lobe durations; the other is a stationary cam similar in form which provides a means of manually lifting the pins from the reading position in order to insert a tape. The manual release lever mounted on the front panel of the mechanism is also linked to the detent, permitting it to be removed from the geneva wheel so that the tape may be made free running. When the lever is operated to raise the pins and remove the detent, it also opens a limit switch in the circuit to the clutch magnet, Fig. 6.15, so that the clutch cannot be engaged until the pins and detent are returned to their operating positions.

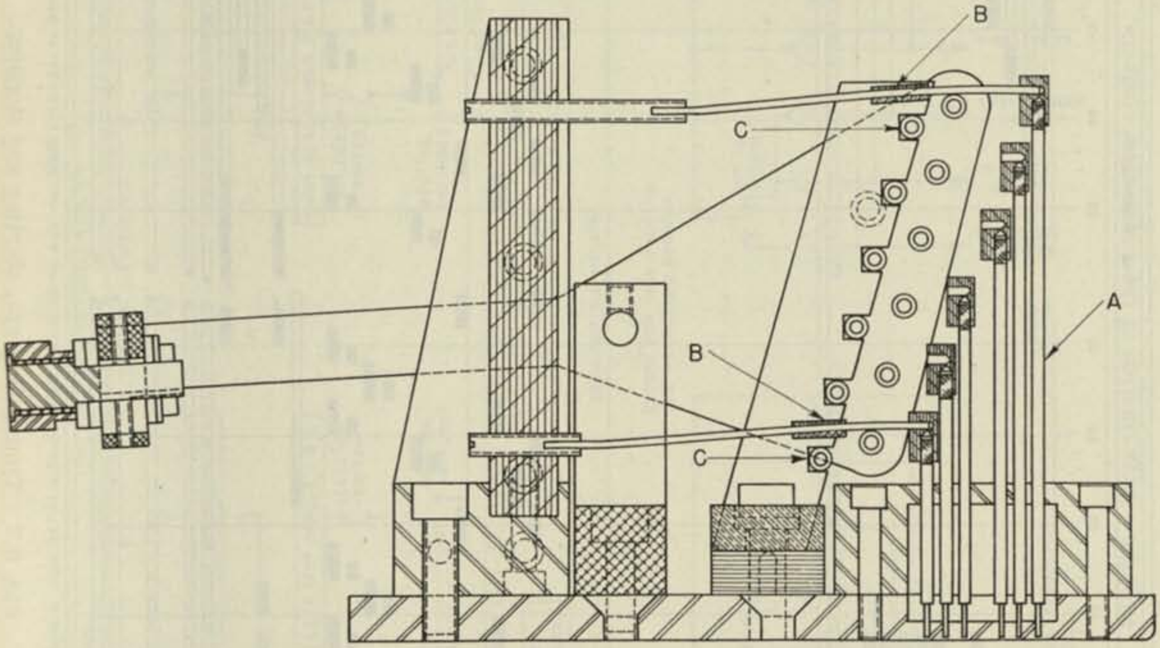

Fig. 6.6 - Section through pin-box.

The pin-box, Plate XIX and Fig. 6.6, is constructed of two vertical duplicate halves each containing 90 reading pins. The parts are mounted on a base plate containing guide holes for

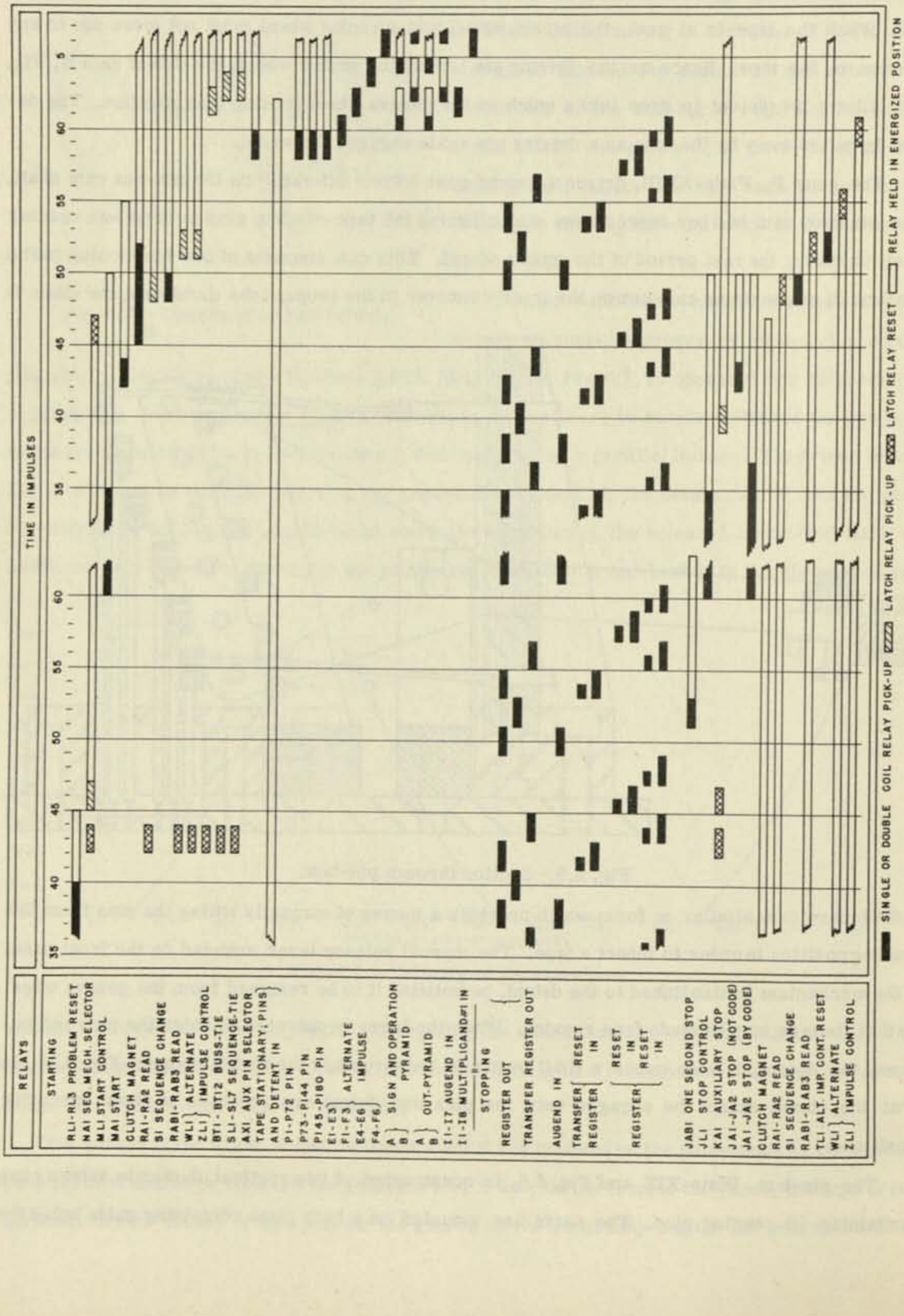

Fig. 6.7 - Timing diagram, starting and stopping.

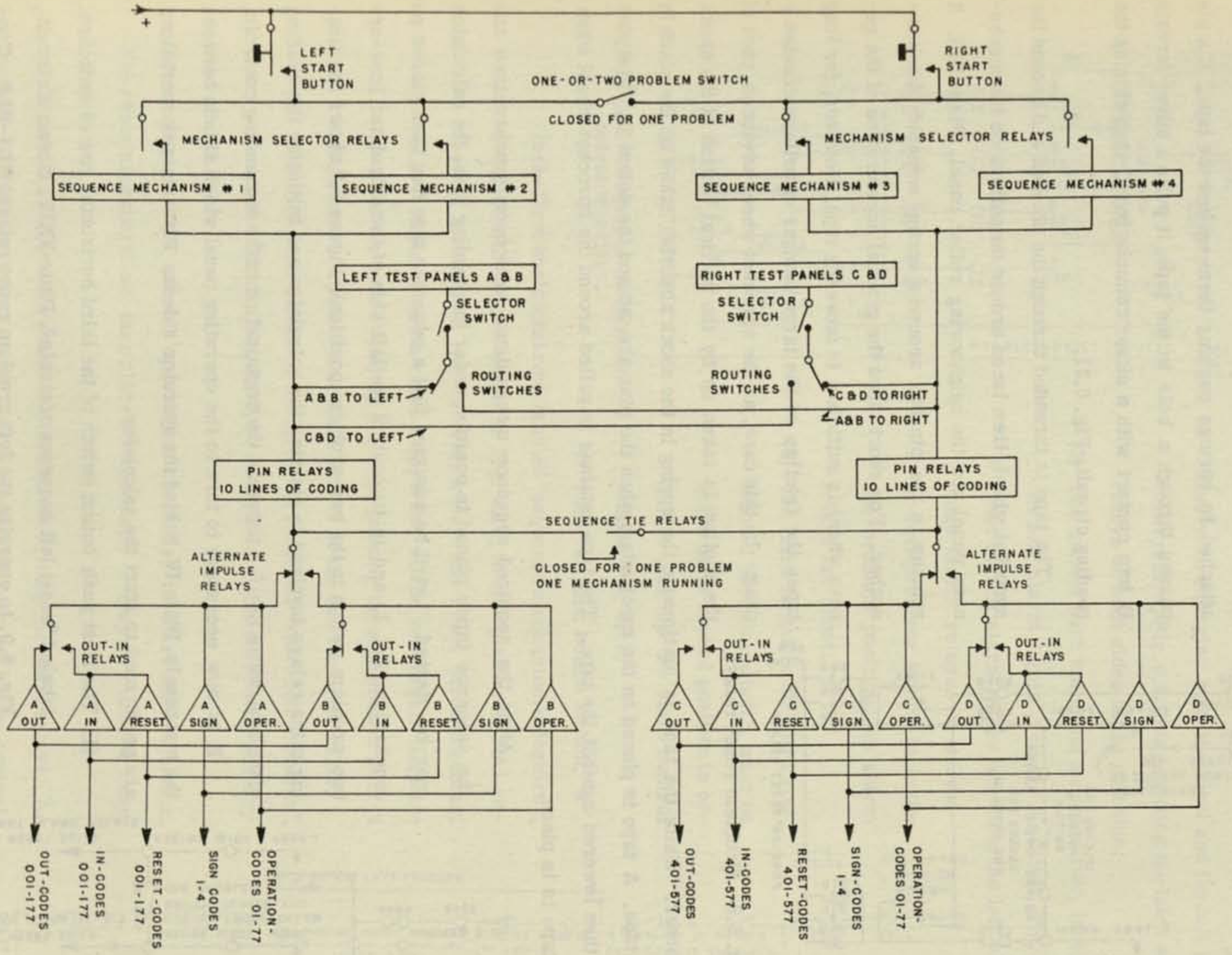

Fig. 6.8 - Organization of the sequencing controls.

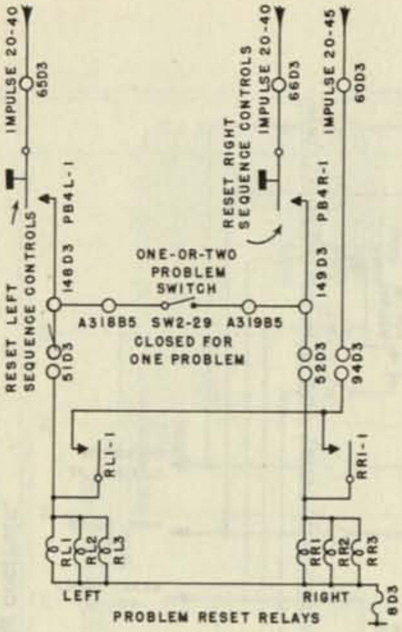

Fig. 6.9 - Problem reset relays.

the pins. The pin-box cam operates a system of lifting rods and levers. These raise and lower the pins A which are attached to springs pushing them against the tape. If a pin passes through a hole in the tape, it pulls a silver ferrule B into contact with a silver common bar C thus closing the reading circuit, Fig. 6.21.

The tape is threaded through the pin-box and around the sprocket wheel, then laced around the pulleys on the mechanism panel and the neighboring roller panel, Plate XIII. It returns to the pin-box around a spring actuated shock absorber. For short tapes the gradual acceleration of the geneva wheel is sufficient to move the tape. However, for long tapes the friction of the large number of pulleys creates a drag. In this case, as the sprocket wheel advances, part of the motion is taken up by the vertical motion of the shock absorber. While the tape is stationary, the spring in the shock absorber takes up the slack in the tape. A tape is placed on the mechanism when the pins are out and the detent in. The pins are then lowered against the tape. The tape retainer is pulled around the sprocket wheel when the tape is in place.

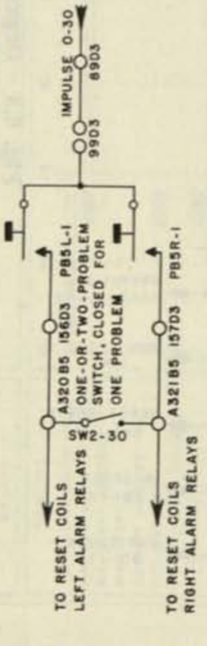

Fig. 6.10 - Reset of alarm relays.

After the required sequence mechanisms have been synchronized and the sequence tapes placed in position under the reading pins, the calculator may be started. Let it be assumed that a sequence tape has been placed on mechanism No. 1, and is to control the left side of the calculator (one-or-two-problem switch in the two-problem position). Figure 6.7 shows the timing of the relays involved in starting the calculator and initiating the reading of the tape, while Fig. 6.8 presents the organization of the sequencing controls.

It is now necessary to turn to the operating panel which stands between the test panels, Plate IV, behind the operator's desk. Five manual operations are performed to start the calculator.

(1) The first push button switch of the third horizontal row of switches, labeled "reset left sequence controls", Plate XXIV, closes a circuit, Fig. 6.9, to energize the left problem reset relays, RL1-RL3. Contacts of these relays supply a reset impulse, 42-44, to the latch relays controlling the operation of the left side of the calculator. If

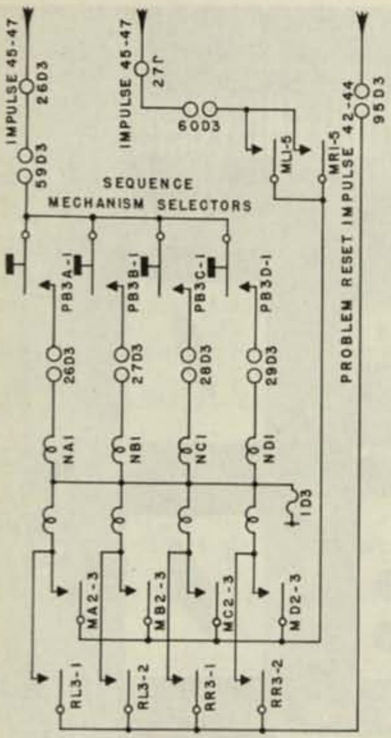

Fig. 6.11 - Sequence mechanism selector relays.

the calculator is operating as a single unit on one problem, either the right or the left push button will serve to energize both the right and the left problem reset relays, Fig. 6.9, thus resetting the latch sequence relays on both sides of the machine.

(2) The second push button on the third row, labeled "reset left alarm lights", closes a circuit, Fig. 6.10, to reset the left alarm relays including the left main machine alarm relays. If the one-or-two-problem switch is in the one-problem position, all alarm relays are reset.

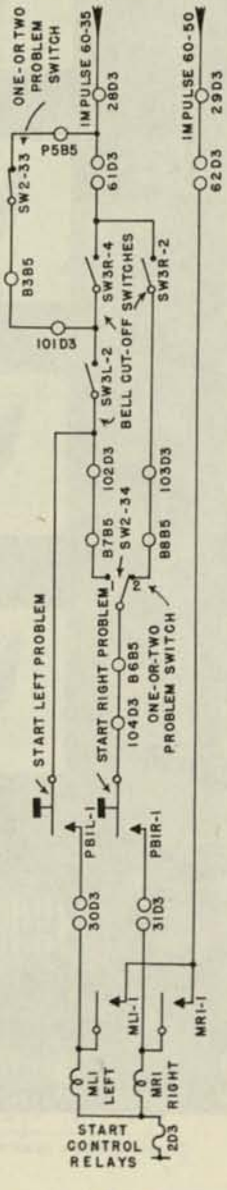

Fig. 6.12 - Start control relays.

(3) The third switch on the third row, labeled "left alarm bell", must be in the up or closed position in order to pick up the start control relays, Fig. 6.12.

(4) The first push button switch, "1", in the first horizontal row, labeled "sequence mechanism selectors", completes the circuit shown in Fig. 6.11, to energize relay NA1 selecting mechanism No. 1. This relay was reset through contact RL3-1 of the problem reset relays, and will be reset again (impulse 45-47 of the next cycle) by a circuit passing through contact MA2-3 of the start relays and contact ML1-5 of the start control relay.

(5) The third push button on the first row, labeled "start left problem", closes a circuit, Fig. 6.12, to energize the left start control relay ML1.

This completes the manual operations necessary to start the calculator. The remaining operations take place automatically or may be initiated under code control.

Figure 6.13 shows the various circuits energizing the start relays. An impulse 42-44 through ML1-3 and NA1-1, closed by the push button controlled circuits during the manual starting procedure, energizes the start relays MA1-MA2 of sequence mechanism No. 1. However, the start relays also

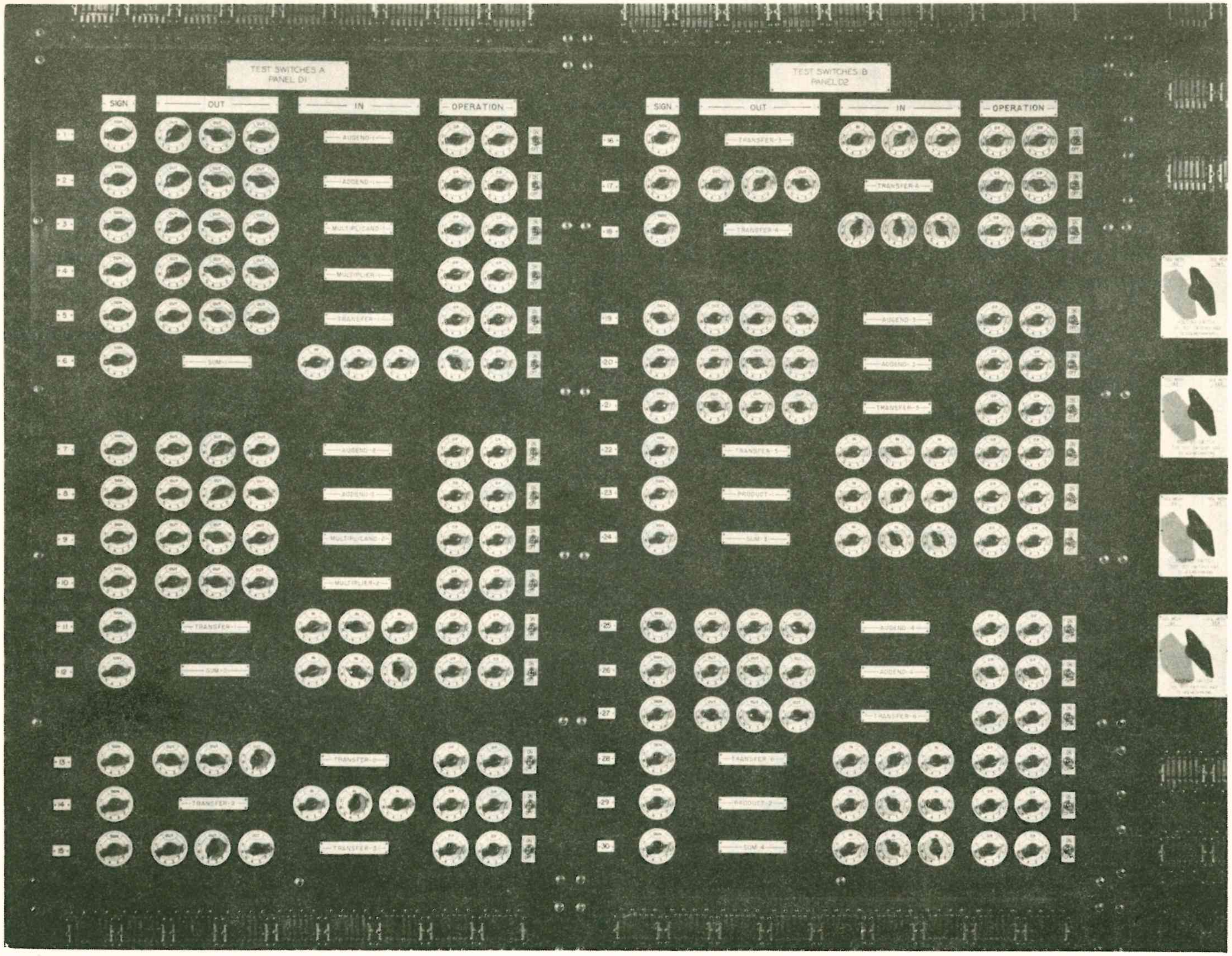

Plate XXV Test Panels A and B

may be energized by code as shown in the figure.

In Fig. 6.14, are tabulated the start and stop codes. These operation-codes must be entered in one of the first 18 lines of coding of a cycle and are effective at the end of that cycle. When two mechanisms on the same side are to be used in the sequencing of a problem, the mechanism at rest must have its pins standing on blank tape as will be seen when the reading pin circuits are considered.

Operation-code 67, read by mechanism No. 2, will unconditionally start mechanism No. 1 and vice versa. Operation-code 70 will start mechanism No. 1 if, and only if, the relay contact QL1-2 is in the normally closed position, Fig. 6.13. This is a contact of the start-stop register relay (cf. Fig. 3.11). Thus if the quantity standing in the start-stop register is positive, the mechanism will be started; if the quantity is negative, the circuit is not completed and the start relays are not energized.

SEQUENCE MECHANISM RUNNING	START CODES				STOP CODES		
	SAME SIDE		CROSS START		MECHANISM RUNNING		
	UNCONDITIONAL 67	CONDITIONAL 70	UNCONDITIONAL 71	72	UNCONDITIONAL 73	CONDITIONAL 74	END OF PROB 75
1	2	2	4	3	1	1	1
2	1	1	4	3	2	2	2
3	4	4	1	2	3	3	3
4	3	3	1	2	4	4	4

Fig. 6.14 - Start and stop codes.

If the one-or-two-problem switch is in the one-problem position, Fig. 6.13, operation-code 71 read by mechanism No. 3 or No. 4 will unconditionally start mechanism No. 1. This is known as a "cross start" since it transfers control from one side of the machine to the other. If mechanism No. 1 or No. 2 is to be called in by mechanism No. 3 or No. 4,

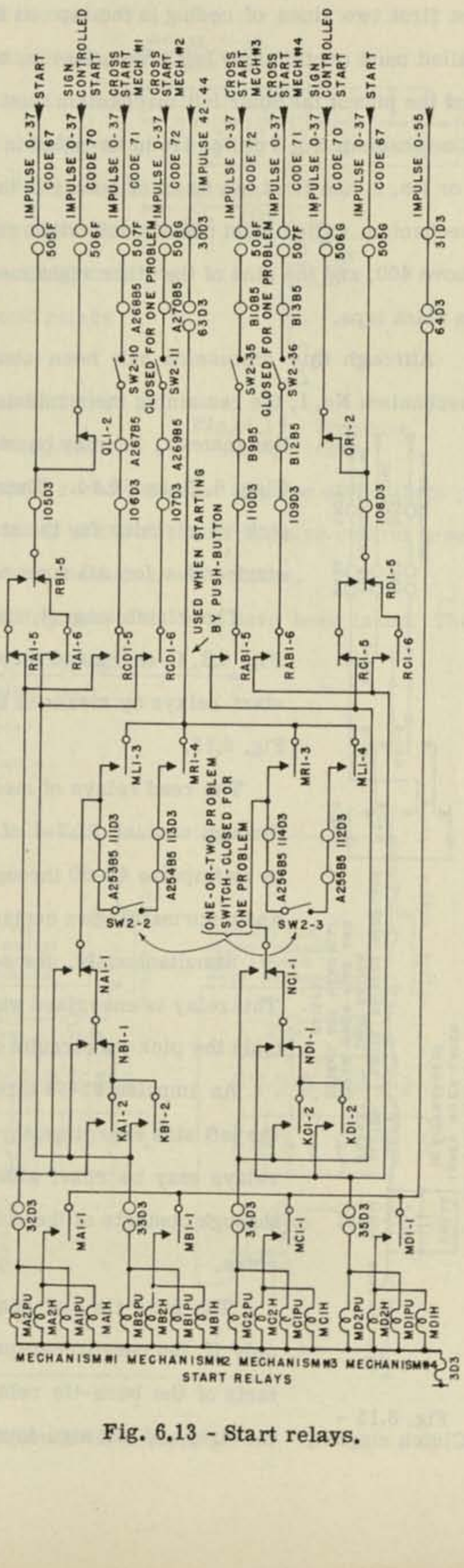

Fig. 6.13 - Start relays.

the first two lines of coding in the tape on the left mechanism called must contain only left codes, that is, codes less than 400 and the pins of the other left mechanism must rest on blank tape. If mechanism No. 3 or No. 4 is to be called in by mechanism No. 1 or No. 2, the first two lines of coding in the tape of the right mechanism called must contain only right codes, that is, codes above 400, and the pins of the other right mechanism must rest on blank tape.

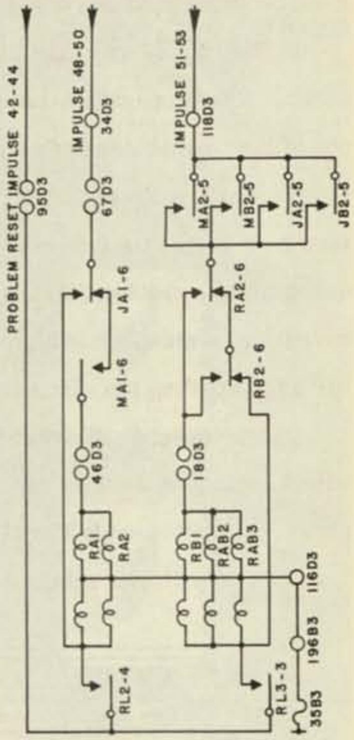

Fig. 6.16 - Read relays.

Although this discussion has been centered on sequence mechanism No. 1, the remaining mechanisms operate in a similar manner, as may be seen by reference to Figs. 6.13 and 6.14. These figures give the pick-up circuits for the start relays and the start codes for all four mechanisms.

The clutch magnet, operating the latch of Fig. 6.3, is energized through a contact of the start relays by means of the circuit shown in Fig. 6.15.

The read relays of mechanism No. 1, RA1-RA2, received a reset impulse through contact RL2-4 of the problem reset relay. They are now energized by an impulse 48-50 through a normally closed contact of the stop relay JA1-6 and a normally open contact of the start relays, Fig. 6.16.

Simultaneously, the sequence change relay S1 is energized, Fig. 6.17. This relay is energized whenever a mechanism is started or stopped and controls the pick-up circuits of the buss-tie and sequence-tie relays.

An impulse 51-53 through contacts of the start relays and read relays on the left side energizes three more read relays RAB1-RAB3, Fig. 6.16. These relays may be reset either through a contact of the problem reset relays or through contacts of the stop relays and read relays on the left side of the machine.

The buss-tie and sequence-tie relays are energized, Fig. 6.18, if, and only if, the one-or-two-problem switch is in the one-problem position. Contacts of the buss-tie relays connect the right and left busses of the machine, the right and left sign-invert registers, and the right and left code-interchange

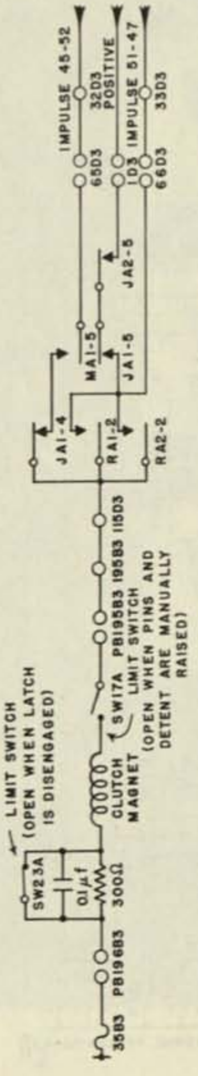

Fig. 6.15 - Clutch magnet.

registers, Fig. 3.11. One of two lights, just below the read-out lights on the main control panel, Plate XII, indicates the position of the buss-tie relay contacts.

The sequence-tie relays connect the pick-up circuits of the right sequence pyramid relays to the read-out circuits of the left pin relays (or vice versa) when the calculator is operating as one unit under control of one mechanism, as will be seen when the pick-up circuits of the pyramid relays are considered.

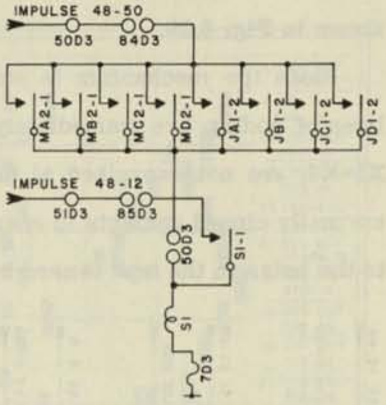

Fig. 6.17 - Sequence change relay.

The alternate impulse control relays WL1 and ZL1 are successively energized through contacts of the sequence change and read relays, Fig. 6.19. These latch relays receive a reset impulse either through contacts of the problem reset relays, or through contacts of the alternate impulse control reset relay when control of the calculator is passed from one mechanism to another.

All of the steps preliminary to the actual reading operation now have been taken. The

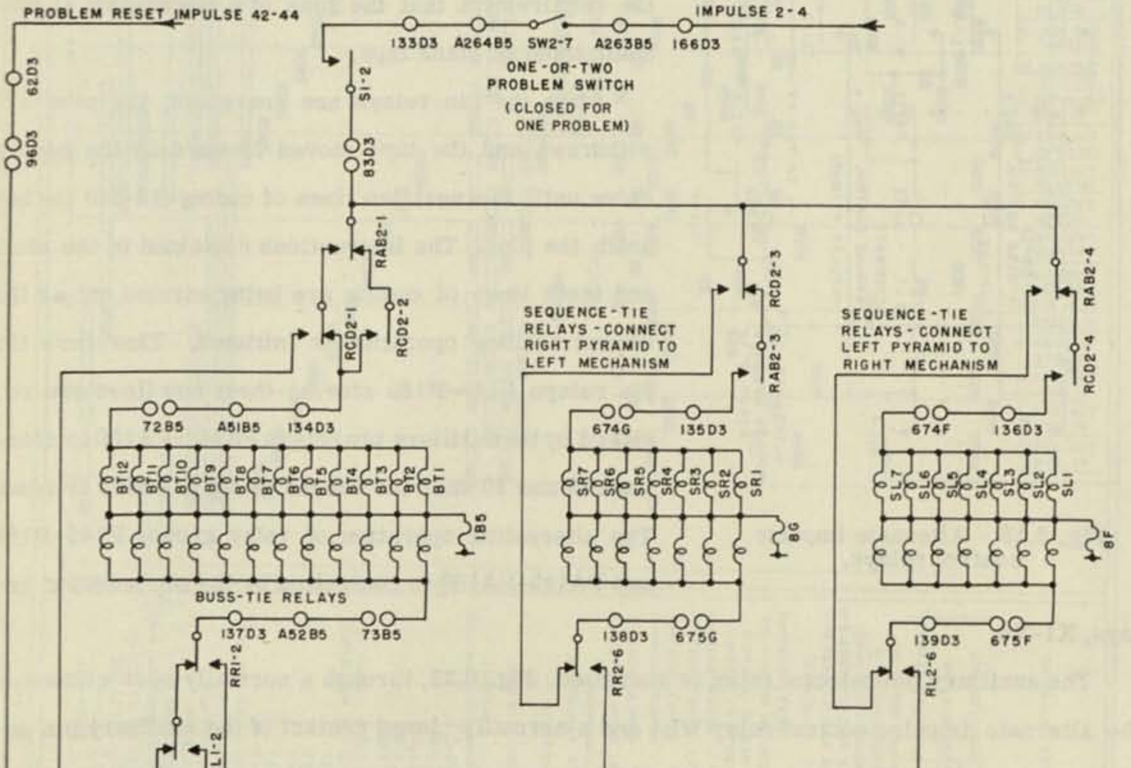

Fig. 6.18 - Buss-tie and sequence-tie relays.

timing of the relays reading and transmitting the first complete cycle of 30 lines of coding is shown in Fig. 6.20.

Since the mechanism is started by button with the pins in reading position, the first ten lines of coding are immediately read and stored in the pin relays. The pin selector relays, X1-X6, are not energized at this time. Hence, the tape-reading circuit passes through their normally closed contacts to energize a configuration of the pin relays, P1-P180, corresponding to the holes in the tape sensed by the reading pins, Fig. 6.21. These pin relays are divided into three groups according to the duration of their hold circuits: P1-P72, storing the first four lines of coding; P73-P144, storing the fifth through eighth lines; and P145-P180, storing the ninth and tenth lines of coding.

As may be seen in Fig. 6.21, the pins of two sequence mechanisms on the same side of the calculator and the code wires arising in the test panels are all connected in parallel. It is this wiring that dictates the requirement that the pins of a mechanism at rest shall stand on blank tape.

After the pin relays are energized, the pins are withdrawn and the tape moved forward by the geneva drive until the next ten lines of coding (11-20) lie beneath the pins. The instructions contained in the ninth and tenth lines of coding are being carried out as the second reading operation is initiated. Therefore the pin relays P145-P180 storing these two lines are replaced by the auxiliary pin relays PA145-PA180 to store lines 19 and 20 when the second group of codes is read. The alternating operation of relay groups P145-P180 and PA145-PA180 is controlled by the pin selector relays, X1-X6.

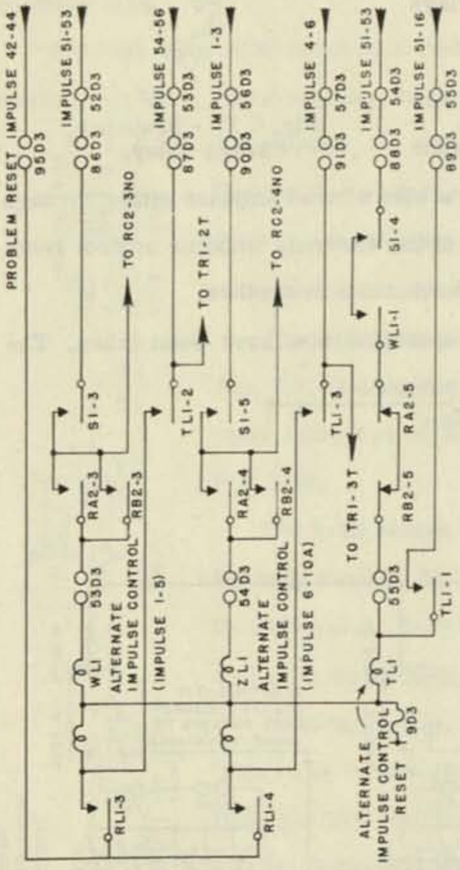

Fig. 6.19 - Alternate impulse control relays.

The auxiliary pin selector relay is energized, Fig. 6.22, through a normally open contact of the alternate impulse control relay WL1 and a normally closed contact of the auxiliary pin selector relay AX2. This latter contact, AX2-2, insures that the auxiliary pin selector and pin selector relays shall be energized only during every other reading operation. A contact of AX1 closes the circuit to pick up AX2, and similarly contacts of AX2 close circuits to energize AX3

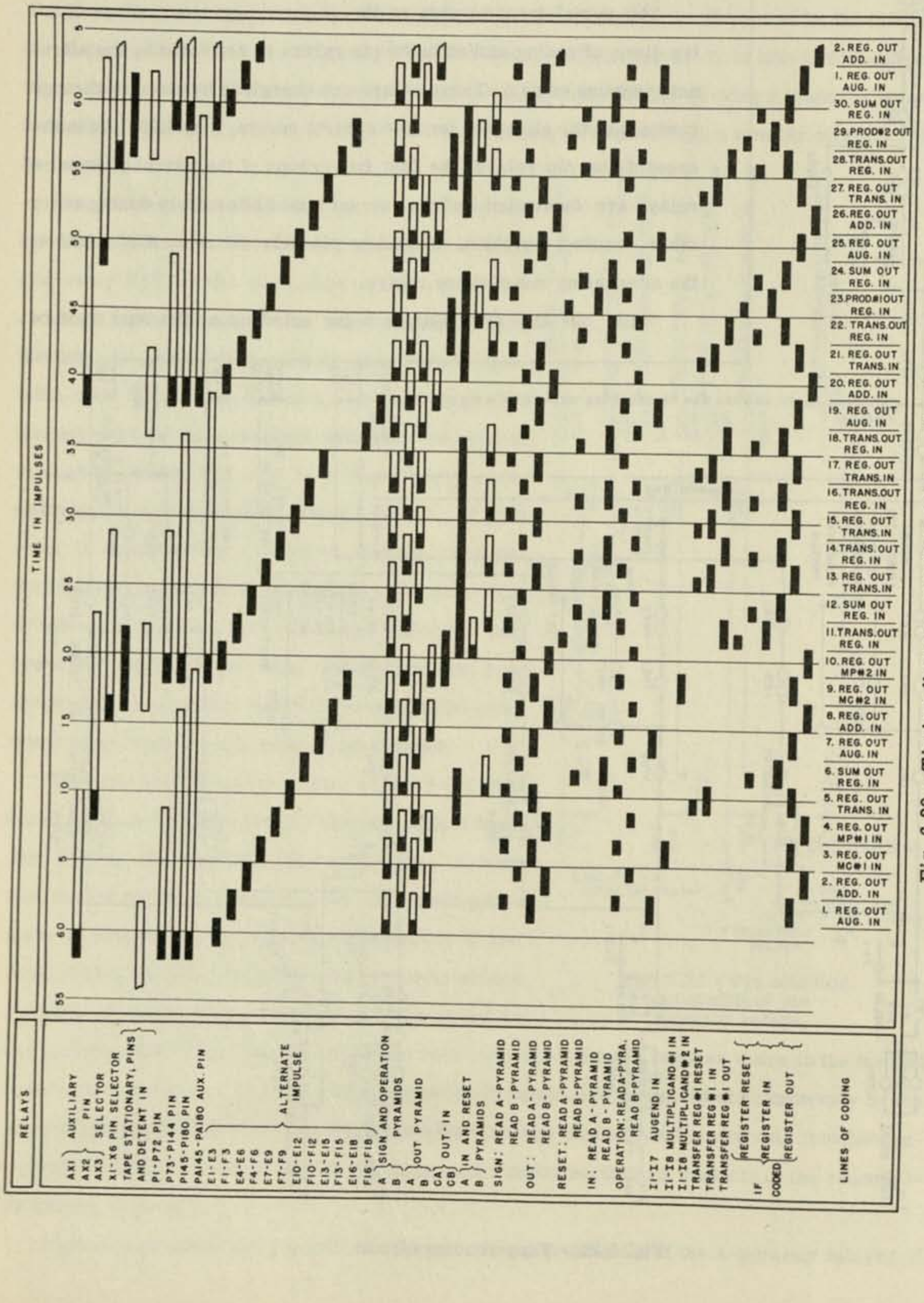

Fig. 6.20 - Timing diagram, reading 30 lines of coding.

and X1-X6, Fig. 6.22.

The serial transmission to the sequence pyramid relays of the ten lines of coding stored in the pin relays is regulated by the alternate impulse relays. These relays are energized by circuits through contacts of the alternate impulse control relays, Fig. 6.23. As in the case of the pin relays, the last two groups of the alternate impulse relays are duplicated and the two sets used alternately during every other reading operation. Auxiliary pin selector relay AX2 controls the alternating use of these relays.

While one line of coding is being acted upon, the next must be

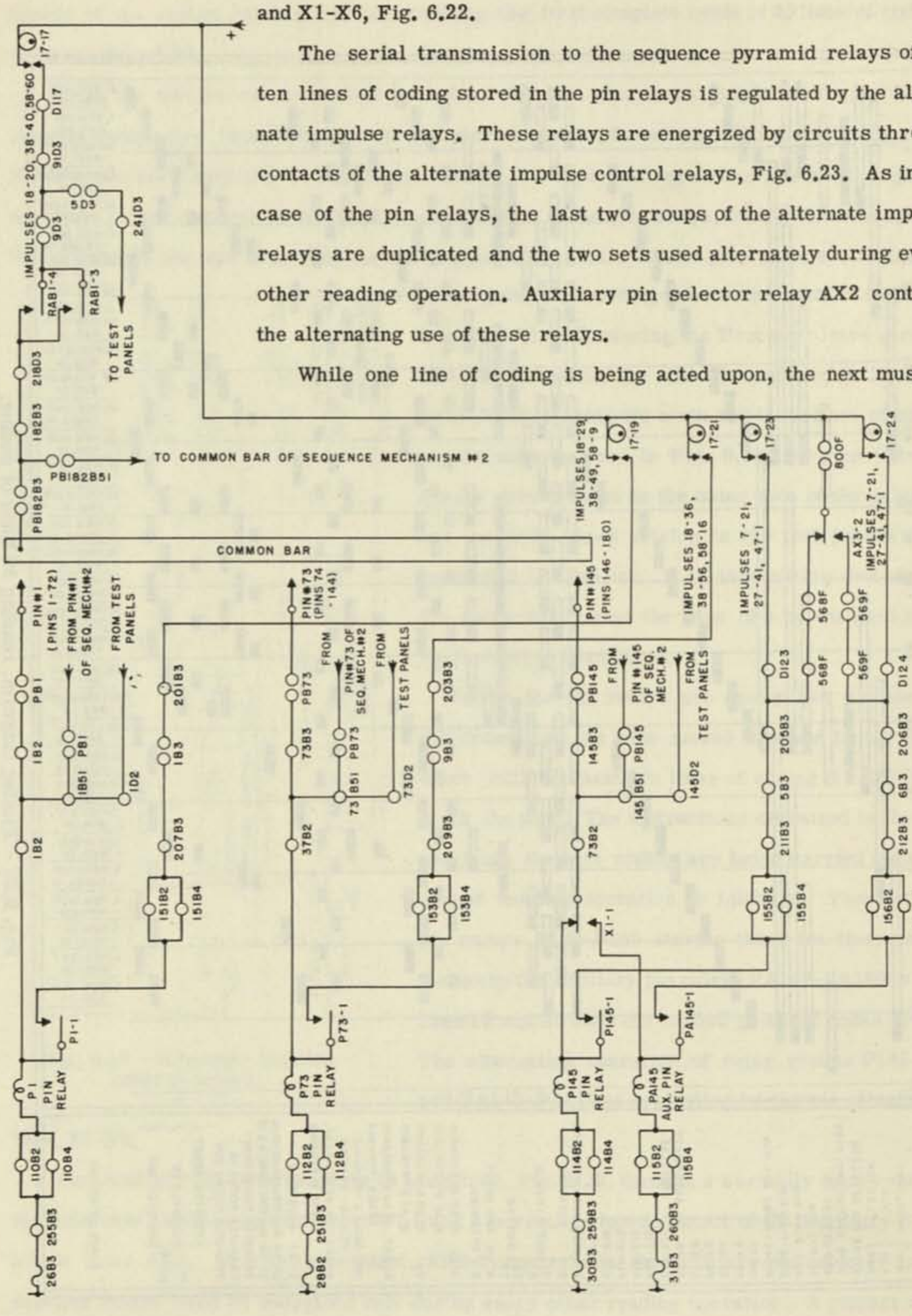

Fig. 6.21 - Tape-reading circuit.

prepared. Hence two sets of sequence pyramids are provided on each side of the calculator. The first line of coding is read to the A-pyramids, the second to the B-pyramids, the third to the A-pyramids, and so on. Figure 6.24 shows the circuit reading the first line of coding from the pin relays through the first set of alternate impulse relays to the 18-wire A-buss for transfer to the A-pyramid relays. The second line of coding is read through a similar circuit to the B-pyramid.

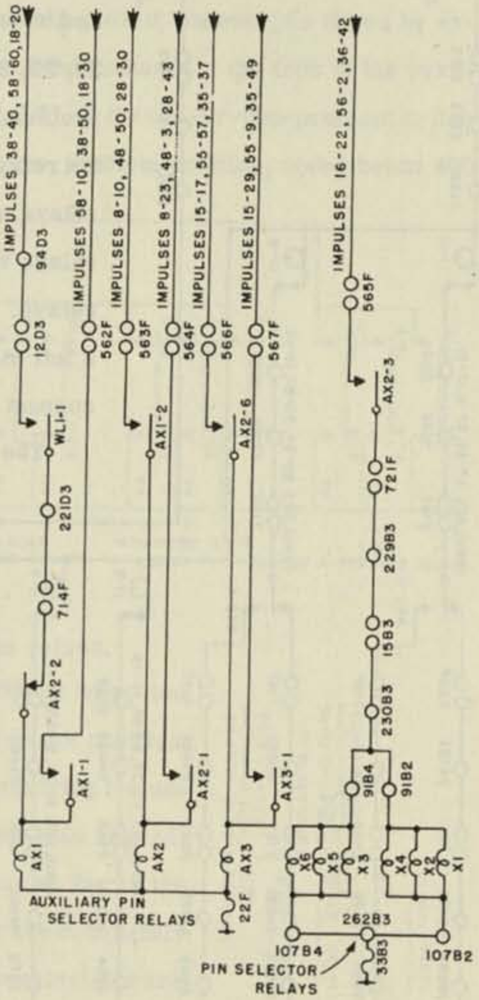

Fig. 6.22 - Pin selector and auxiliary pin selector relays.

A contact of the code-interchange register relay UL1 appears in the circuit reading the 1-relay (pin relay P12) of the units digit of the out- or in-code. If operation-code 76 is not read, the circuit through pin relay P12 is normal. However, if operation-code 76 is read (indicated by pin relays P13 through P17 in the energized position), the circuit through pin relay P12 may be altered by the code-interchange register relay contact, UL1-1. If this relay is energized by a negative quantity read into the register, an even code is altered to the next higher odd code, while an odd code is reduced to the next lower even code. If the relay is not energized, corresponding to a positive quantity standing in the code-interchange register, the code is not changed.

The out- and in-codes of the registers are read from the same position in the sequence control tape. The routing of a register code read from a particular line of coding to the out- or in- and reset-pyramids is determined by the position of the out-in relays, CA1-CA2 and CB1-CB2. The normally closed contacts of these relays route the register codes to the out-pyramid relays and the normally open contacts route the register codes to the in- and reset-pyramid relays. (The in- and reset-pyramid relays are energized simultaneously by the same impulse.) The out-in relays are energized through contacts of the alternate impulse control relays and, if the calculator is operating on one problem, through contacts of the sequence-tie relays, Fig. 6.25.

Figure 6.26 shows the circuit from the pin relays to the coils of the A-pyramid relays. If the machine is operating on two problems, the impulses enter on the A-buss, pass through the normally closed contacts of the sequence-tie relays to the A-pyramid relays. A similar circuit for the second line of coding energizes the B-pyramid relays. The out-in relays deliver the register code to the in- and reset-pyramids for lines of coding 6, 11, 12, 14, 16, 18, 22, 23, 24, 28, 29, and 30. If the machine is operating on one problem under control of one right mechanism, the sequence-tie relays, SL1-SL7, will be energized. The contacts of these relays will connect the circuit reading through the right pin-relays via the 18-wire C-buss to the coils of the A-pyramid relays. Similarly, if the entire calculator is under control of a left mechanism, the right sequence-tie relays, SR1-SR7, will connect the 18-wire A-buss to the C-pyramid relays.

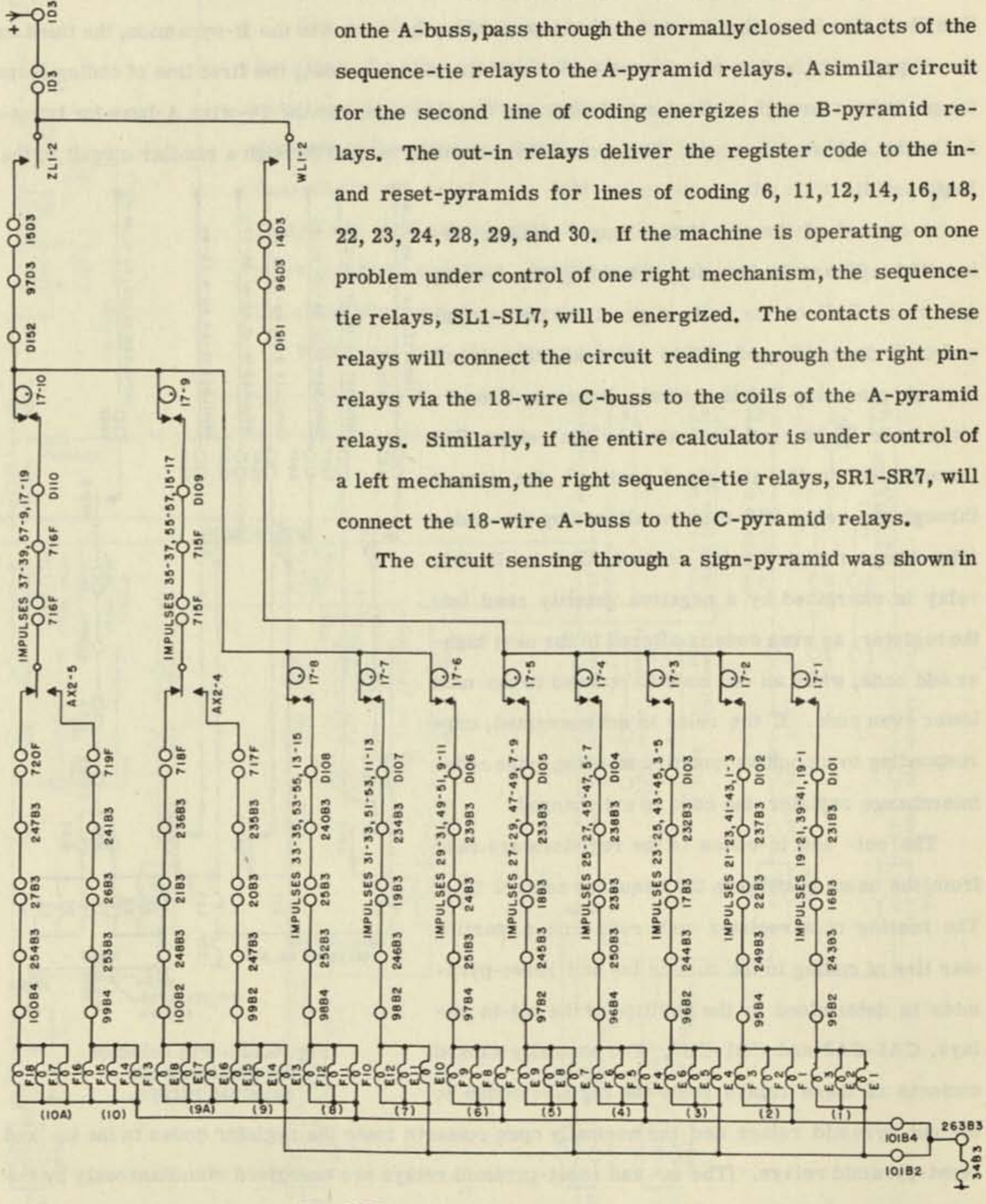

Fig. 6.23 - Alternate impulse relays.

The circuit sensing through a sign-pyramid was shown in Fig. 3.5. Figure 6.27 shows a portion of the A-out-pyramid transmitting the impulses to energize the out-relays of the various registers. The B-pyramid circuit is the same as that of the A-pyramid and the two are tied together at the base. The operation-, in-, and reset-pyramids are similar in construction.

If the calculator is operating on one problem under control of one mechanism, as may be seen in Fig. 6.26, both the A and C (or B and D) pyramids are positioned by each line of coding. Only one pyramid is sensed, however, as shown by examination of the contacts at the tops of the pyramids, Fig. 6.27. If the one-or-two-problem switch is in the one-problem position, codes below 400 will be routed through the A-pyramid and codes above 400 will be routed through the C-pyramid. If the switch is in the two-problem position, only codes below 400 will be effective. Hence, problems requiring the use of only one-half of the calculator must be coded for the left side regardless of which side is used for the actual computation. Thus as far as the mathematician is concerned, the two sides of the calculator are completely interchangeable. Problems requiring the use of the entire calculator are coded for both sides jointly if but one mechanism is running. If two mechanisms are running (one problem), each must read tapes coded for its own side of the calculator.

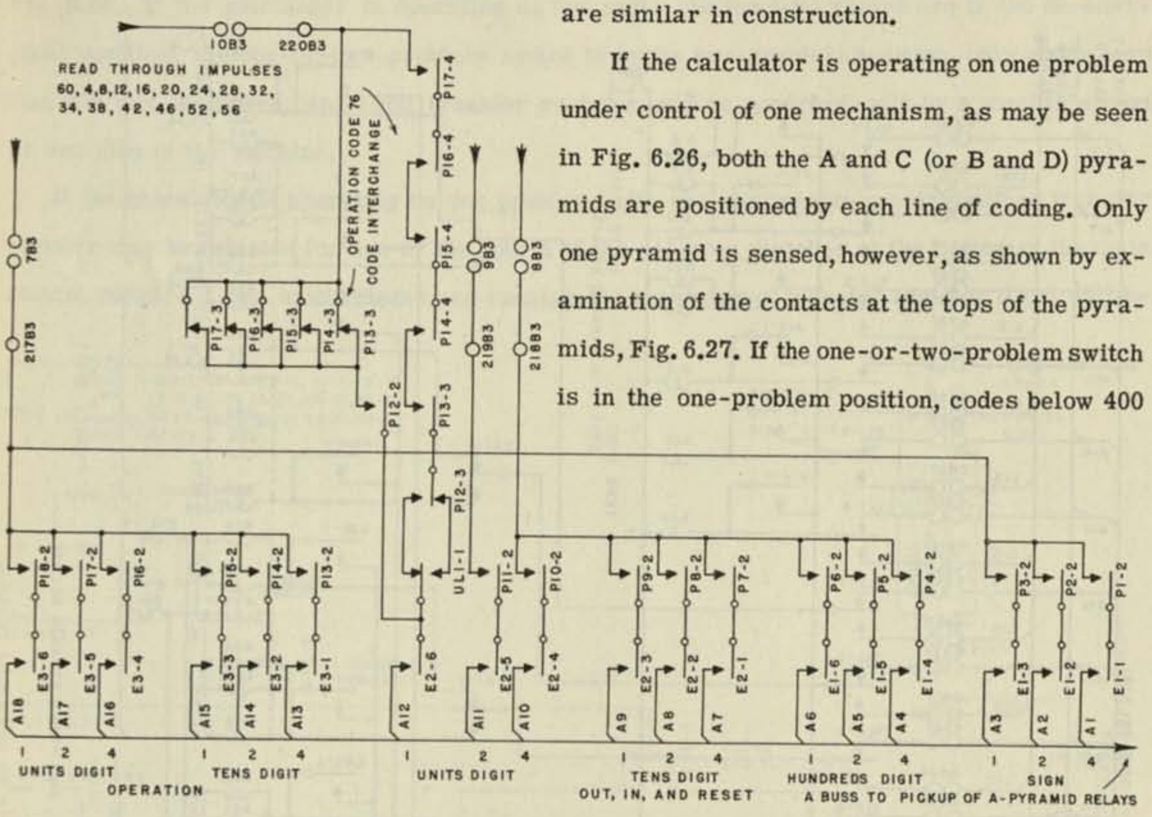

Fig. 6.24 - Read through of pin relays.

The timing of the impulses sensing through the A and B sequence pyramids is shown in Fig. 6.20. Contacts of the pyramid relays, other than those employed in the cascades themselves, are used to supply the fixed portion of each line of coding. The transfer register out-relays are energized by a circuit passing through an in-pyramid relay contact,

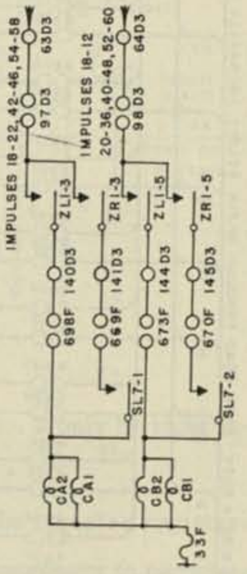

Fig. 6.25 - Out-in relays.

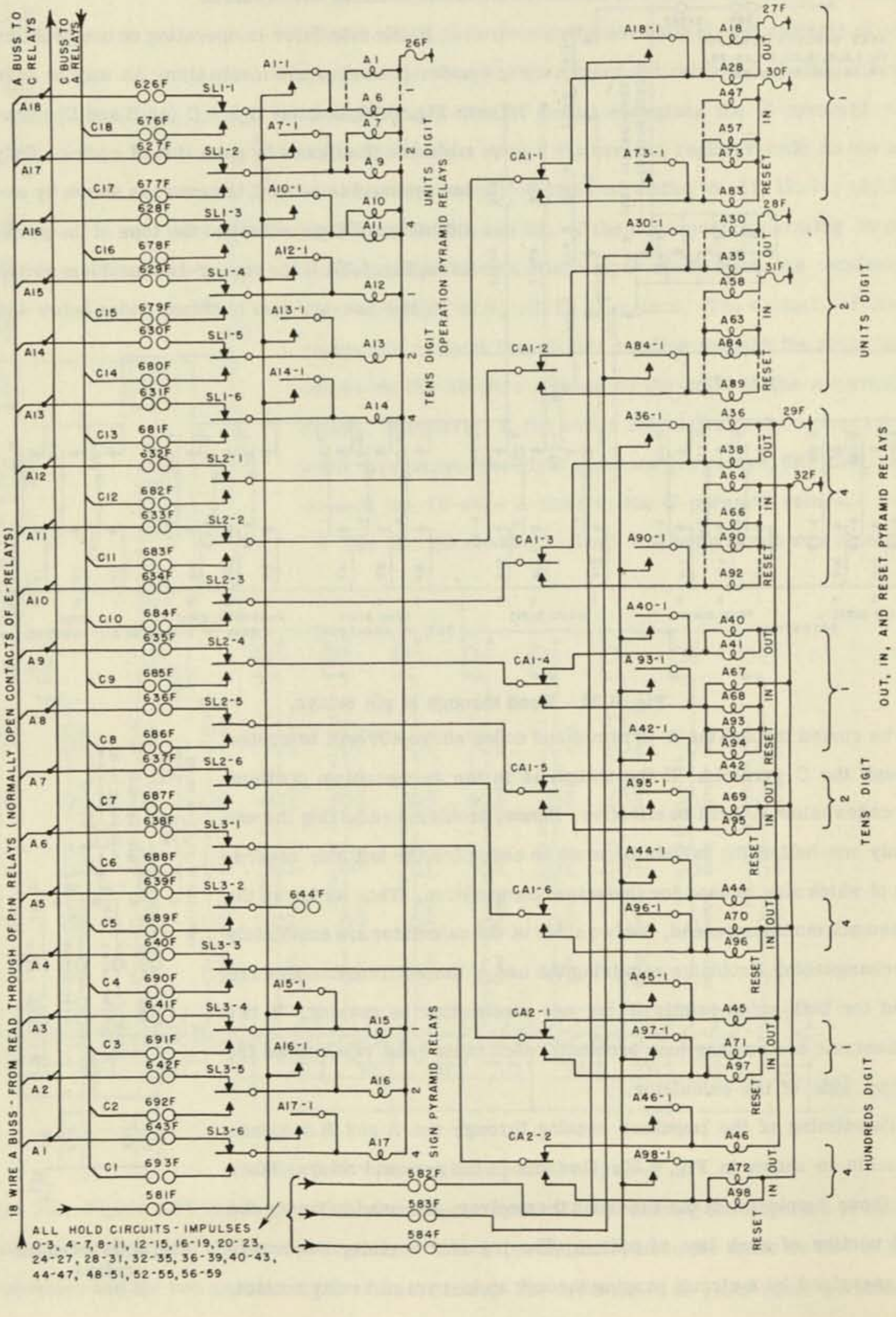

Fig. 6.26 - Read-in to pyramid relays.

Fig. 6.28. If the calculator is operating as two units, the buss-tie relays are in the de-energized position, the one-or-two-problem switch is in the two-problem position, only codes less than 400 are employed, and each transfer register may be governed only by a mechanism on its own side of the machine.

If the calculator is operating on one problem, with one mechanism running, either transfer register may be selected for use by the fourth of the selector switches at the bottom of the main control panel. If two mechanisms are running, the out-relay of transfer register No. 1 will be energized only by left in-codes, and the out-relay of transfer register No. 2 only by right in-codes.

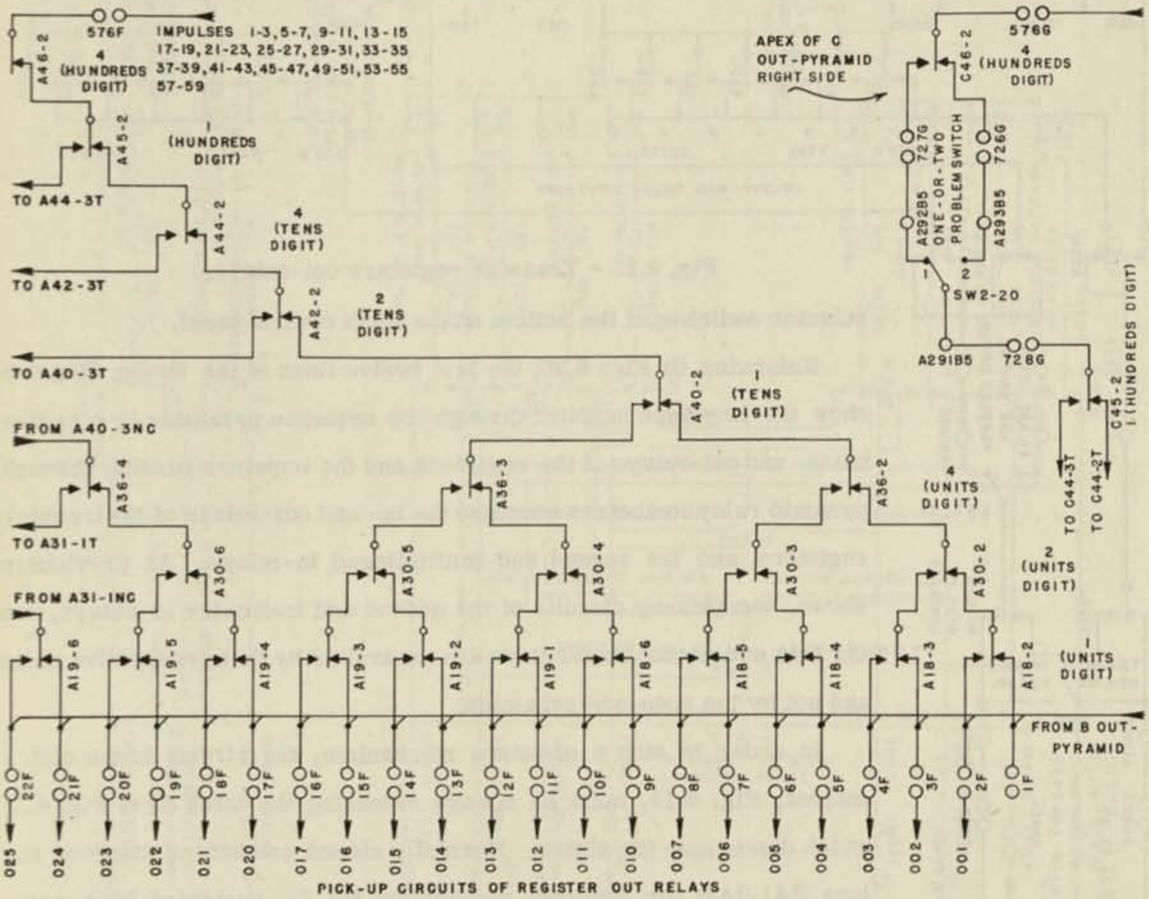

Fig. 6.27 - Read through of out-pyramid.

A similar circuit, Fig. 6.29, controls the pick-up of the in-relays of the transfer registers and the addition and multiplication units. In each case, an out-code is necessary to complete the circuit energizing the in-relay. If the calculator is operating under control of one mechanism on one problem, the addition and multiplication units to be employed are determined by the

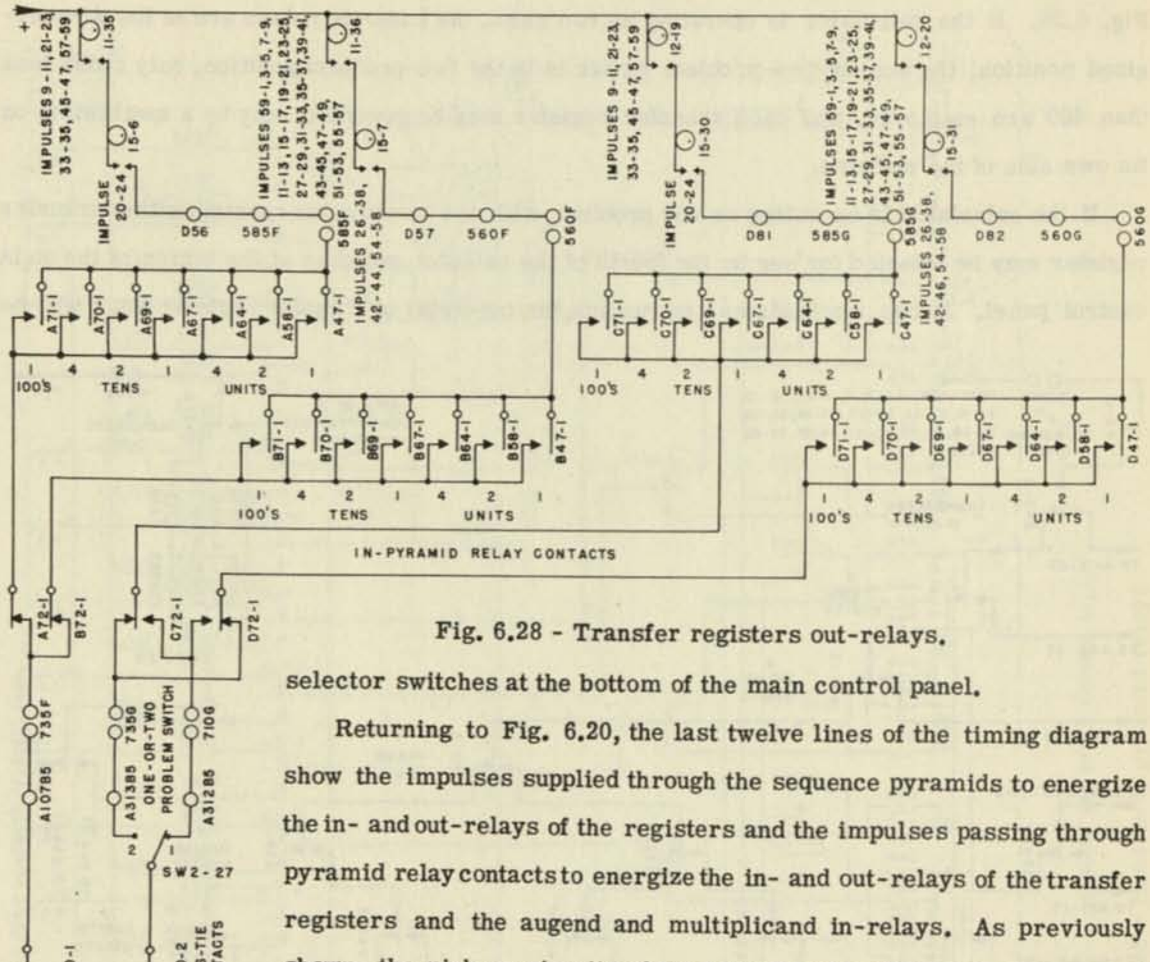

Fig. 6.28 - Transfer registers out-relays.

selector switches at the bottom of the main control panel.

Returning to Fig. 6.20, the last twelve lines of the timing diagram show the impulses supplied through the sequence pyramids to energize the in- and out-relays of the registers and the impulses passing through pyramid relay contacts to energize the in- and out-relays of the transfer registers and the augend and multiplicand in-relays. As previously shown, the pick-up circuits of the addend and multiplier in-relays, and the sum and product out-relays are controlled by their respective units and not by the sequence pyramids.

In order to stop a sequence mechanism, the circuit to the clutch magnet, Fig. 6.15, must be opened releasing the latch (Q of Fig. 6.3) which disengages the clutch. Normally closed contacts of the stop relays (JA1-JA2) for sequence mechanism No. 1), protected by a cam-controlled contact, open the clutch magnet circuit. The stop relays of a mechanism may be energized by circuits controlled by push button, by code, or in case of error, by the check register or an alarm relay. In general, the operation of stopping a mechanism must be initiated within the first 18 lines of a cycle, and will stop the calculator at the end of that cycle. However, if the check register or an alarm becomes operative during the latter part of a cycle, the calculator will stop at the end

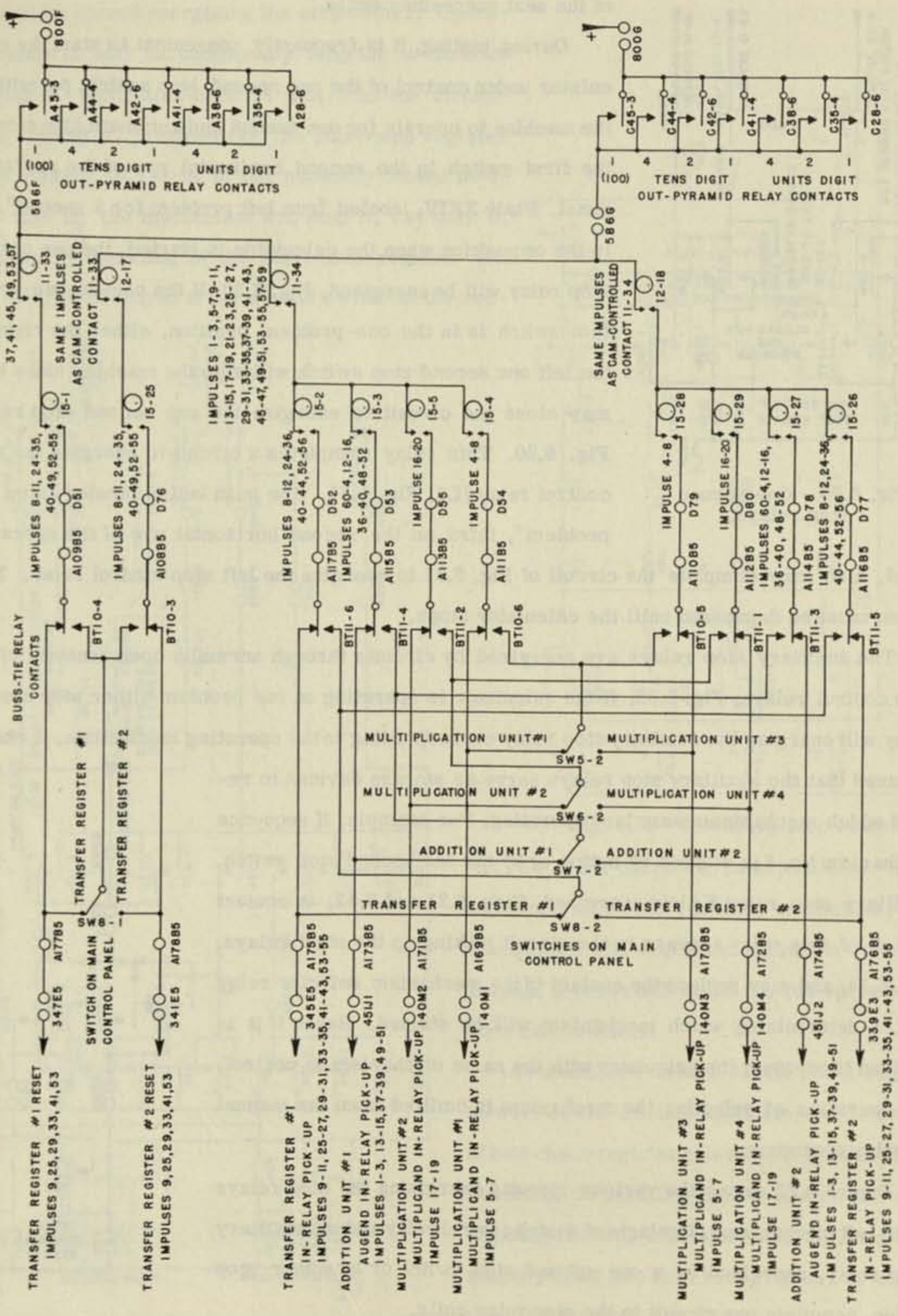

Fig. 6.29 - Transfer register and addition and multiplication units in-relays.

of the next succeeding cycle.

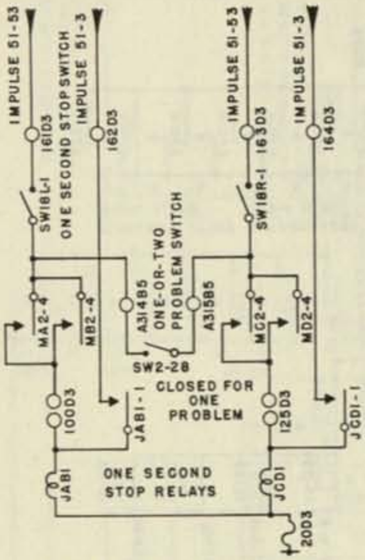

Fig. 6.30 - One second stop relays.

During testing, it is frequently convenient to start the calculator under control of the one second stop switch, permitting the machine to operate for one second and automatically stop. If the first switch in the second horizontal row of the operating panel, Plate XXIV, labeled "run left problem for 1 second", is in the on position when the calculator is started, the one second stop relay will be energized, Fig. 6.30. If the one-or-two-problem switch is in the one-problem position, either the right or the left one second stop switch will stop the machine since both may close the circuit to energize the one second stop relay, Fig. 6.30. This relay completes a circuit to energize the stop control relay JL1, Fig. 6.31. The push button labeled "stop left problem", third on the second horizontal row of the operating panel, also may complete the circuit of Fig. 6.31 to energize the left stop control relay. This button must be depressed until the calculator stops.

The auxiliary stop relays are energized by circuits through normally open contacts of the stop control relays, Fig. 6.32. If the calculator is operating on one problem either stop control relay will energize the auxiliary stop relay corresponding to the operating mechanism. It should be noted that the auxiliary stop relays serve as storage devices to record which mechanisms were last operating. For example, if sequence mechanism No. 1 is stopped by button or by the one second stop switch, auxiliary stop relay KA1 is energized, Figs. 6.31 and 6.32. A contact KA1-2 of this relay appears in the circuit picking up the start relays, Fig. 6.13, and may replace the contact of the mechanism selector relay NA1-1 determining which mechanism will be started. Hence if it is desired to re-start the calculator with the same mechanism in control, the operation of selecting the mechanism is omitted from the manual starting procedure.

Figure 6.33 shows the various circuits energizing the stop relays of the left mechanisms. Contacts of a stop control relay and an auxiliary stop relay, energized by a one second stop switch or by either stop button, complete one circuit to the stop relay coils.

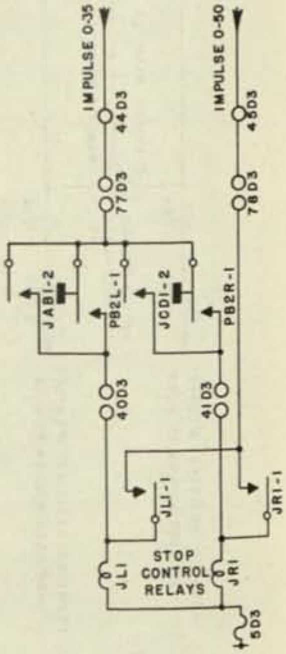

Fig. 6.31 - Stop control relays.

Three operation-codes, 73, 74, and 75, Fig. 6.14, may cause circuits to be closed energizing the stop relays. Operation-code 73 will unconditionally stop the mechanism reading it. Operation-code 74 will stop the mechanism reading it, provided that the start-stop register relay contact QL1-1 is in the normally closed position, that is, the mechanism will stop if, and only if, the quantity standing in the start-stop register (cf. Fig. 3.11) is positive. If the second switch in the second row of the operating panel, labeled "stop left problem on code", is in the on position, the mechanism will stop if the operation-code 75 is read. If the switch is not on, this operation-code has no effect.

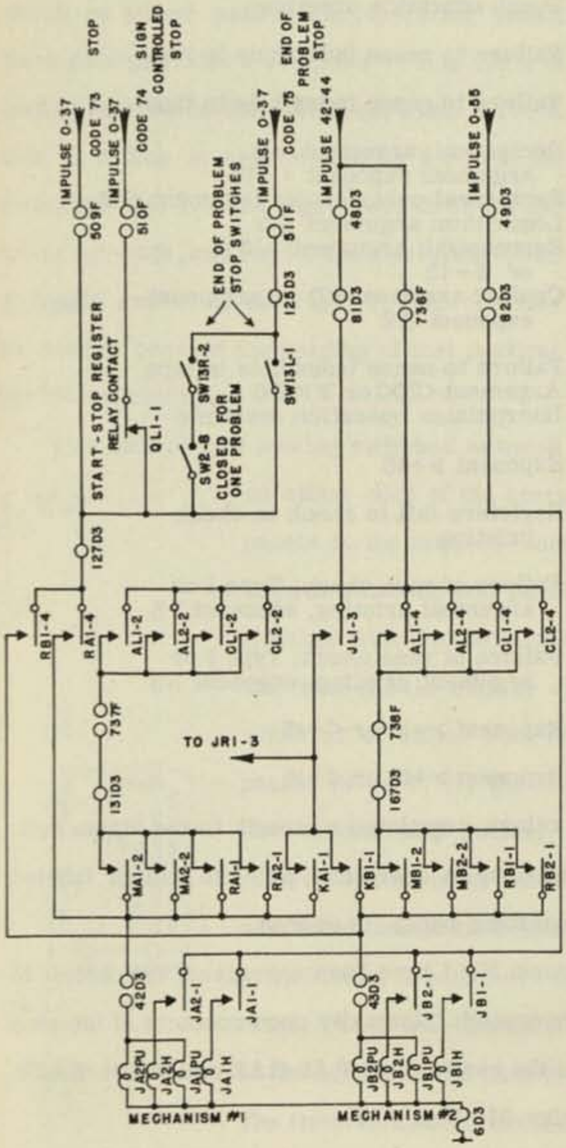

Fig. 6.33 - Stop relays.

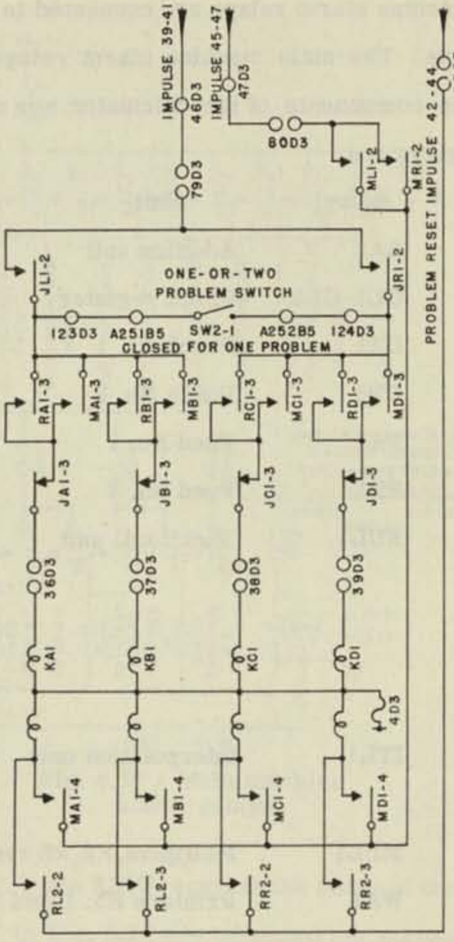

Fig. 6.32 - Auxiliary stop relays.

As mentioned on page 61, the check registers are constructed in duplicate, and contacts of both check register relays CL1-2 and CL2-2, connected in parallel, appear in a circuit energizing the stop relays, Fig. 6.33. Thus if a quantity read into the check register is negative, the machine will stop.

Contacts AL1-2 and AL2-2 of the main

machine alarm relays are connected in parallel and may close a circuit energizing the stop relays. The main machine alarm relays are picked up, Fig. 6.34, if the alarm relays of any of the components of the calculator are energized. For the left side of the machine these alarm relays are:

Relay	Unit	Cause of Alarm
AA1	Addition unit	Exponent $>+15$ or <-15
CL1-CL2	Check register	Negative quantity in register
DA1	Punch No. 1	Punch operation overtime
DB1	Punch No. 2	Punch operation overtime
FA1	Feed No. 1	Failure to sense index hole in tape
FB1	Feed No. 2	Failure to sense index hole in tape
FUL1	Functional unit	Reciprocal: argument $= 0$ argument exponent $= +15$ Reciprocal square root: argument ≤ 0 Logarithm: argument ≤ 0 Exponential: argument >15 or ≤ -15 Cosine: argument <0 or argument exponent ≥ 2
ITL1	Interpolation unit	Failure to sense index hole in tape Argument <200 or ≥ 1000 Interpolator operation overtime
MUL1	Multiples, $\times 2$, $\times 5$ register	Exponent $>+15$
WA1	Printers No. 1 and No. 2	Registers fail to check on check printing
WA2	Printer No. 1	Failure of vane check; Type I or argument printing, exponent >3
WB2	Printer No. 2	Failure of vane check; Type I or argument printing, exponent >3
XA1	Multiplication unit No. 1	Exponent $>+15$ or <-15
XB1	Multiplication unit No. 2	Exponent $>+15$ or <-15

A contact AL1-1 of the main machine alarm relays completes a circuit to the alarm bell, Fig. 6.35. Once energized, the bell circuit will continue in operation until the switch labeled "left alarm bell," third in the third row of the operating panel, is opened.

If the stop relays JA1-JA2 of sequence mechanism No. 1 have been energized, the circuit to the clutch magnet of this mechanism, Fig. 6.15, is opened. Normally open contacts of the stop relays close circuits to deliver reset impulses to the read relays RA1-RA2 and RAB1-RAB3, Fig. 6.16, and to energize the sequence change relay S1, Fig. 6.17.

If the calculator is operating on one problem, one mechanism running, and if a mechanism on the left has stopped itself and instructed a mechanism on the right to start, sequence-tie relays SR1-SR7 will be reset, and SL1-SL7 will be energized, Fig. 6.18. The buss-tie relays will remain in the energized position as long as only one mechanism is running. If mechanisms on both sides are running, the buss-tie relays are reset, Fig. 6.18.

The two pairs of test panels, AB and CD, providing for manual operation of the calculator, stand on either side of the operating panel. Each pair provides a complete 30 line cycle of coding entered on dial switches, Plate XXV. A line of coding is represented by a row of six switches; one for the sign-code, three for the in- or out-code, and two for the operation-code. A toggle switch at the right of each row may be used to prevent the reading of that particular line of coding.

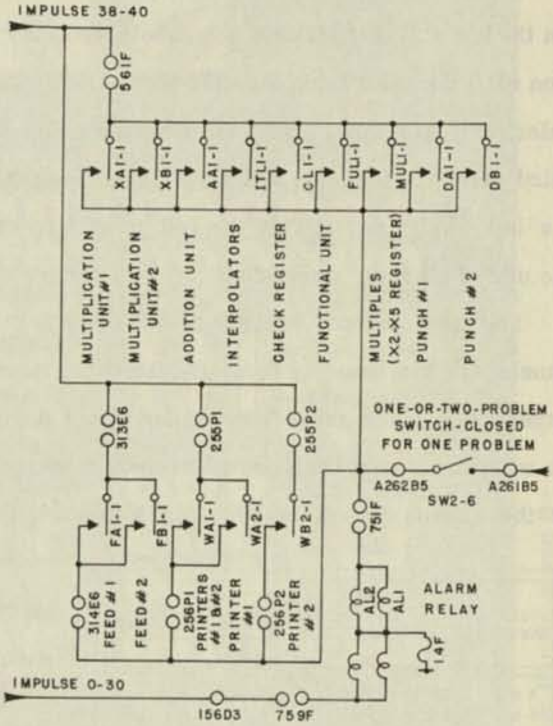

Fig. 6.34 - Main machine alarm relays.

Two sets of four routing switches mounted on either side of the operating panel, Plate XXIV, connect the pairs of test panels to the sequence mechanisms. In Fig. 6.36 are tabulated the various ways in which the test panels may be connected to the sequence mechanisms together with the corresponding switches necessary to start the calculator. The test panels may be used to control the operation of the machine as a whole or of either side for a period of one or two seconds. If one pair of panels is used, (1) the calculator may be stopped at the end of the cycle (one second stop switch), (2) the cycle may be repeated indefinitely until stopped by code or by button, or (3) the cycle may be repeated intermittently with an automatic time delay of five or eleven seconds until stopped by code or by button. If both pairs of panels are used, two cycles of coding are provided. These will be repeated every two, five, or eleven seconds, according to the setting of the time delay controls, until stopped by code or by button. The time delay controls are included in the calculator in order that the behavior of individual components of the machine can be studied when searching for the cause of malfunctioning.

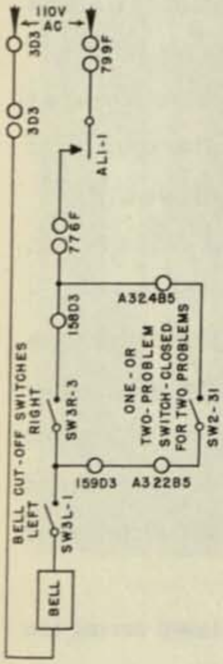

Fig. 6.35 - Alarm bell.

The lowest horizontal row of switches on the operating panel controls the test panel timing. On the left side, the first switch resets the delay timing controls and must be held in the on position until the pilot lamp directly above the switch is lighted. The second switch, labeled "delay selector", has three positions providing "no delay", "5 sec" delay, or "11 sec" delay. The third switch, "test sw. selector", also has three positions; "off", turning off the test panels on the left, "AB" permitting the left panels to read one cycle of coding, and "ABCD" permitting the use of all four panels covering two cycles of coding.

The five manual operations necessary to start the calculator under control of the test panels are the same as those required for starting under control of a sequence mechanism (cf. page 126). Since these operations would normally start a mechanism, the reading pins must be withdrawn from the tapes when the test panels are used. This operation opens the limit switch in the circuit energizing the clutch magnet, Fig. 6.15, and prevents the clutch of the sequence mechanism from engaging. The selector switches and start buttons to be used when starting under test panel control are tabulated in Fig. 6.36

Let it be assumed that the left side of the calculator is to be operated for one second under control of panels A and B. The left group of routing switches is set to connect panels A and B to sequence mechanisms No. 1 and No. 2. The "run left problem for 1 second" switch is turned on. The delay selector switch is set to "no delay". The five manual starting operations are performed, sequence mechanism No. 1 being selected and the left start button used.

TEST PANELS	TIME	SEQ. MECHS.	SELECT. SWITCH	PYRAMIDS	START BUTTON
	ONE PROBLEM				
A & B	1 SEC	1 & 2	1 OR 2	A, B, C, D	EITHER
C & D	1 SEC	3 & 4	3 OR 4	A, B, C, D	EITHER
ABC & D	2 SEC	1 & 2 OR 3 & 4	1 OR 2 OR 3 OR 4	A, B, C, D	EITHER
	TWO PROBLEMS				
A & B	1 SEC	1 & 2	1 OR 2	A & B	LEFT
C & D	1 SEC	3 & 4	3 OR 4	C & D	RIGHT
ABC & D	2 SEC	1 & 2	1 OR 2	A & B	LEFT
ABC & D	2 SEC	3 & 4	3 OR 4	C & D	RIGHT

Fig. 6.36 - Operation of test panels.

The timing of the cam-controlled contacts used in the starting operation was shown in Fig. 6.7. In Fig. 6.37 is shown the timing of the additional contacts used when operating under control of test panels A and B for one second. On the same page, Fig. 6.38 shows the timing when operating under control of all four test panels for two seconds. Finally, Fig. 6.39 gives similar information applicable when the machine is under control of A and B for one second with a five second delay. It should be noted that once the pin relays have been energized, the operation of the calculator proceeds by means of the same pattern of impulses regardless of the method of control, Fig. 6.20.

After the read-out relays RAB1-RAB3 have been energized by circuits closed during the manual starting procedure, Fig. 6.9 through Fig. 6.16, the test panel read-out relays are energized, Fig. 6.40. On each side of the calculator there are three groups of these relays, each

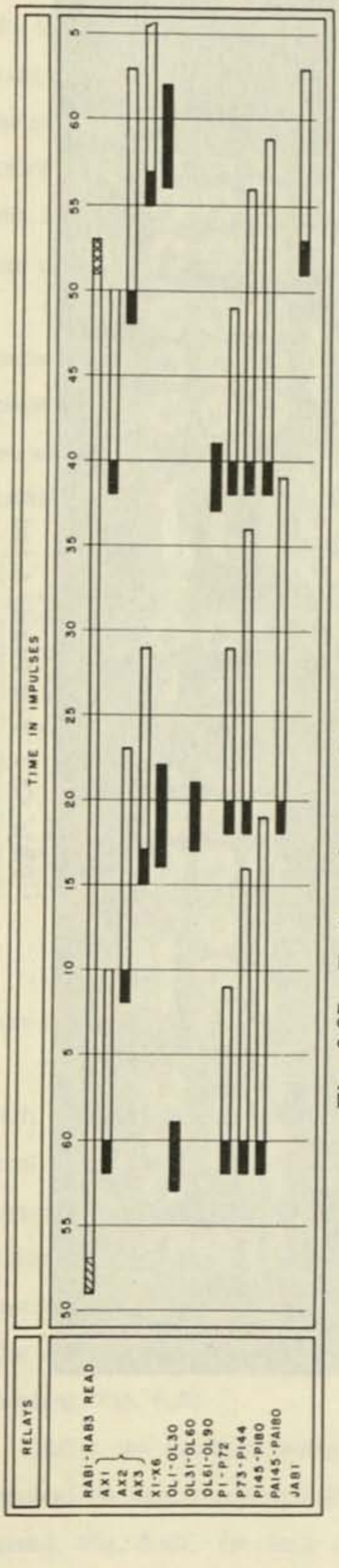

Fig. 6.37 - Test panels A and B run one second and stop.

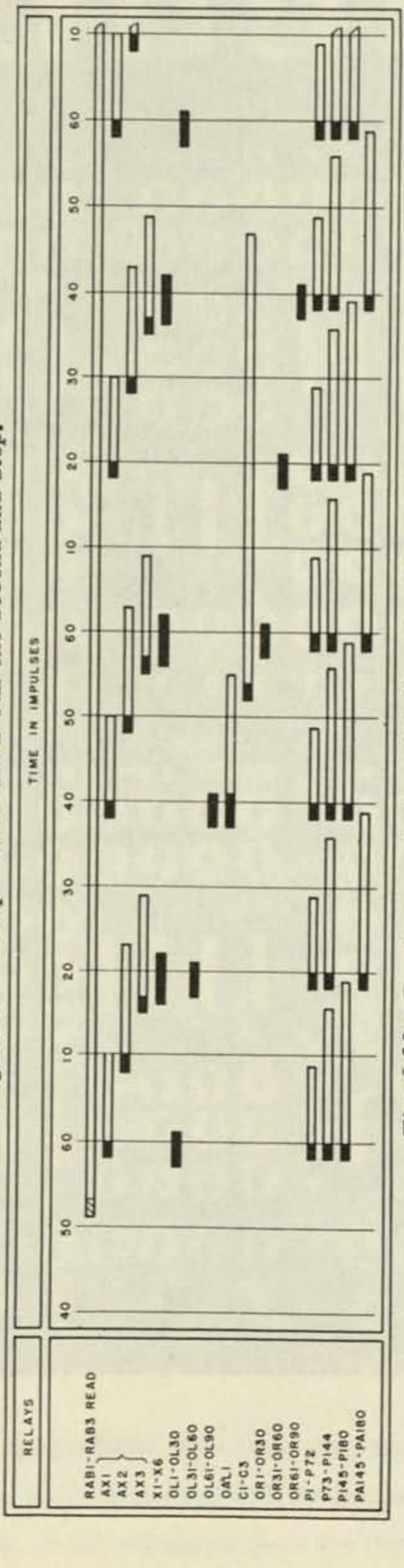

Fig. 6.38 - Run test panels A and B, then C and D, and repeat.

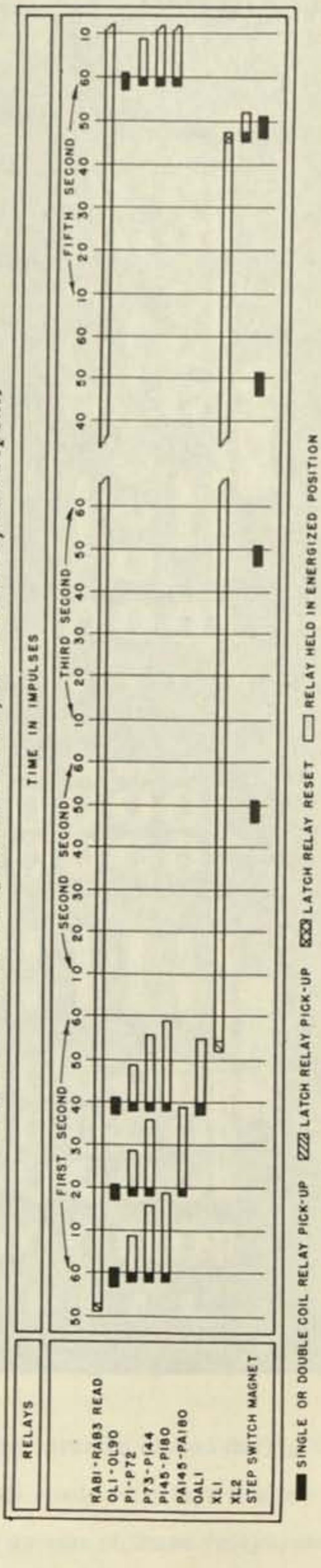

Fig. 6.39 - Run test panels A and B one second and repeat with five second delay.

group reading ten lines of coding. If the test switch selector is set on AB, one second, only the left read-out relays will be energized.

An auxiliary read-out relay OAL1 is energized at the same time that the last group of read-out relays is picked up, Fig. 6.40. The contacts of this relay are used when operating for two seconds or when a time delay is desired.

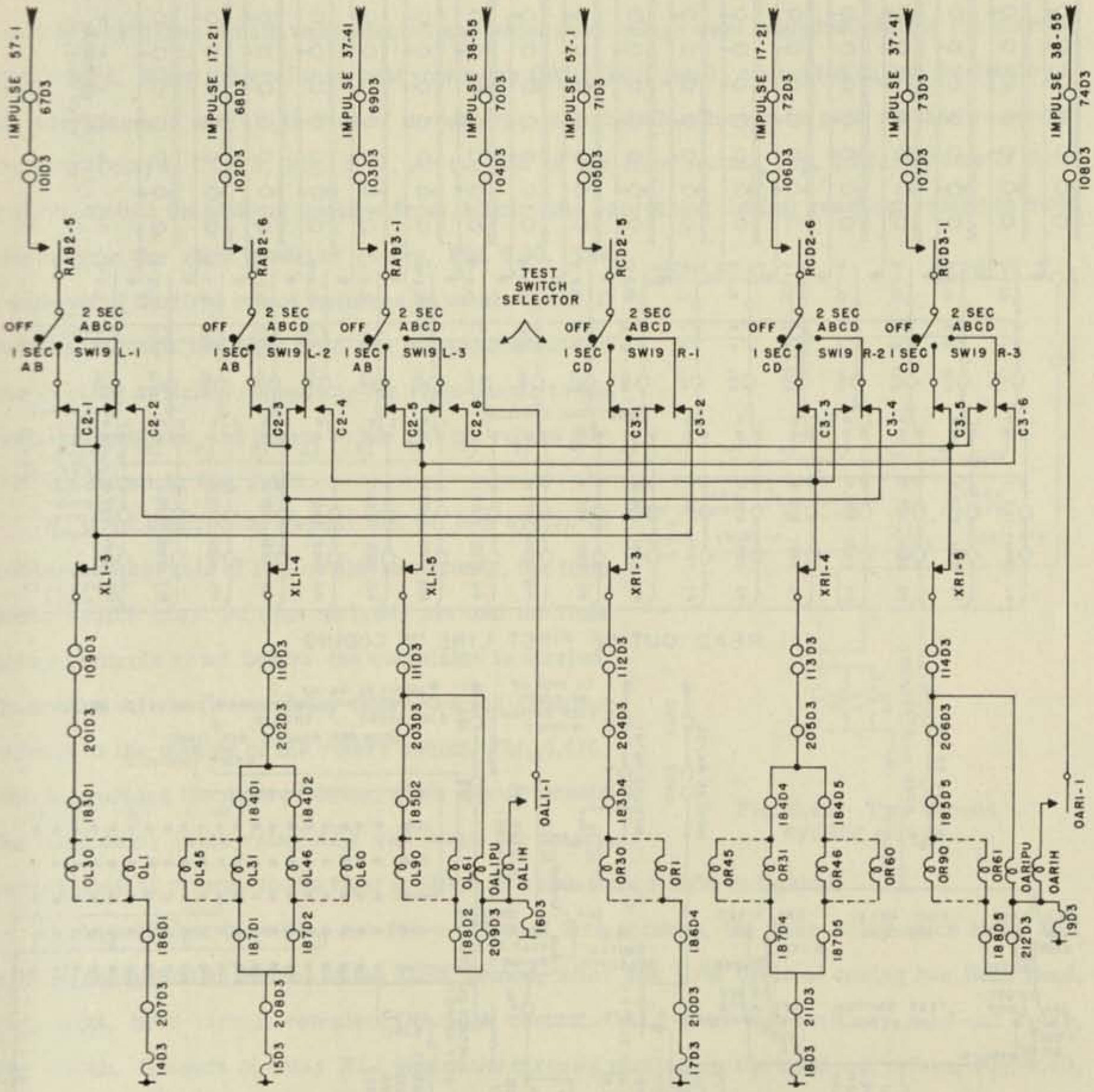

Fig. 6.40 - Test panels; read-out relays.

The impulse reading the first line of test panel coding is the same as that used to read the first line from a sequence control tape since the switches of the test panel are connected in parallel with the reading pins, Fig. 6.21. The reading circuit, Fig. 6.41a, passes through

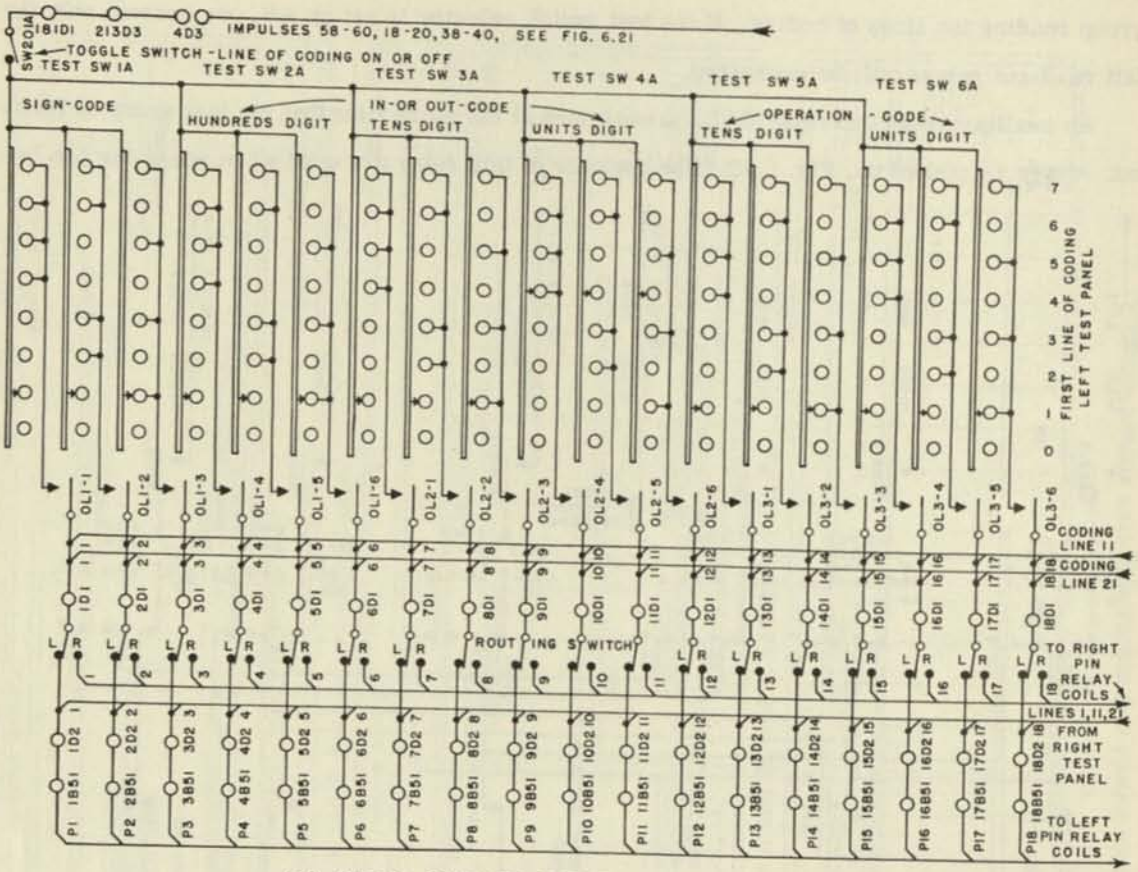

(a) READ-OUT OF FIRST LINE OF CODING

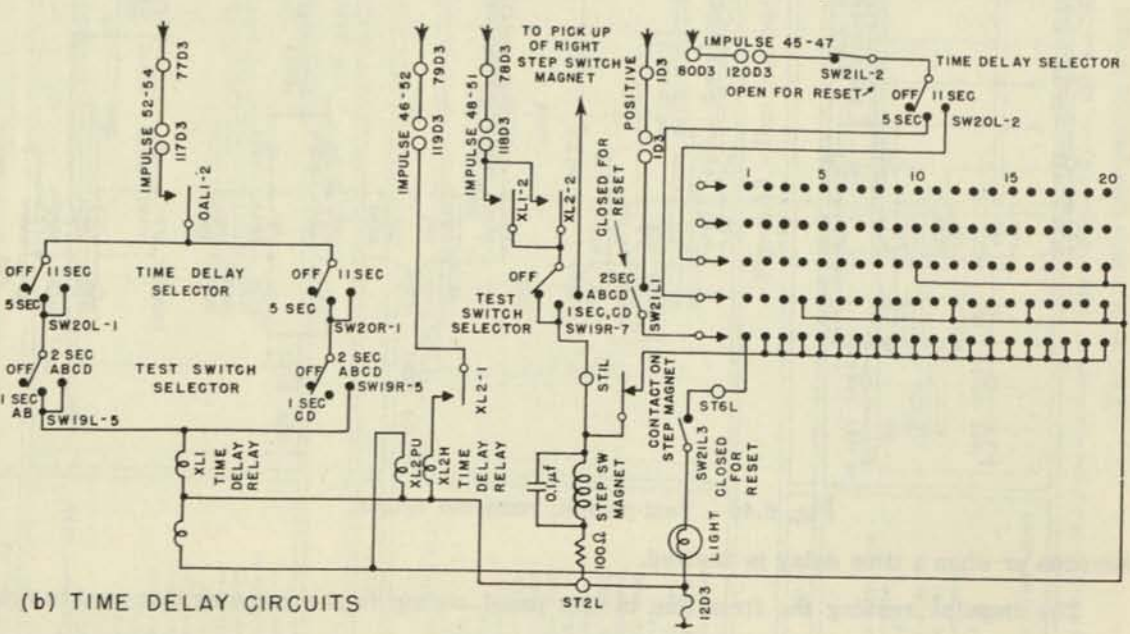

(b) TIME DELAY CIRCUITS

Fig. 6.41 - Left test panels, read-out of first line of coding.

the test panel switches, the read-out relay contacts, and contacts of the routing switches to the coils of the pin relays, Fig. 6.21. The first, eleventh, and twenty-first lines of coding are routed to pin relays P1-P18.

If the calculator is operated for two seconds (test switch selector set to "ABCD"), it is controlled first by the coding on panels A and B, and then by that on C and D, Fig. 6.40, regardless of which mechanism was selected and which read relays were energized during the starting procedure. When the auxiliary read-out relay OAL1 (test panels connected to left mechanisms) is energized, a circuit is closed through the test switch selector to pick up the two second cycling relays, C1-C3, Fig. 6.42. At the end of the first second, Fig. 6.38, contacts of these relays switch the pick-up impulse from the circuits energizing the left read-out relays to those energizing the right read-out relays, Fig. 6.40. The read-out of the first row of switches on panels C and D passes through the right read-out relays, contacts of the routing switches connecting the right panels to the left mechanisms and thence to the left pin relays P1-P18 as shown in Fig. 6.41a.

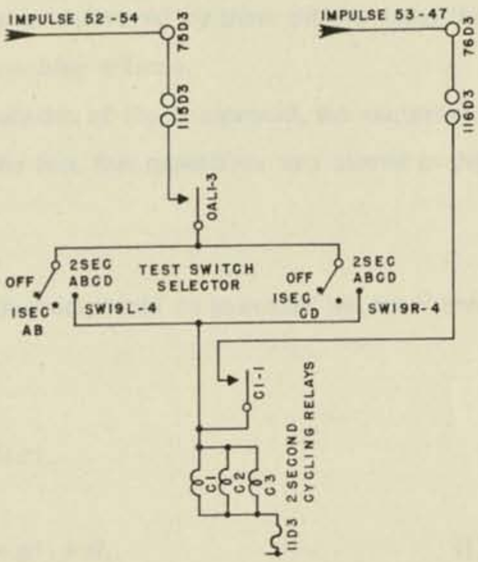

Fig. 6.42 - Two second cycling relays.

If it is desired to repeat one or two cycles of coding at intervals of five or eleven seconds, the time delay switch must be appropriately set and the time delay controls reset before the calculator is started. Operation of the "reset delay timer" switch closes a circuit to the magnet of the rotary switch, Fig. 6.41b, which provides the desired delay. This circuit resets the time delay latch relay XL1 and steps the rotary switch until it returns to the first position at which time a light is lighted.

If the switches have been set for a delay of five seconds, the time delay latch relay XL1 will be energized at the end of the first second, after the first cycle of coding has been read, Fig. 6.39, by a circuit completed through contact OAL1-2 of the auxiliary read-out relay, Fig. 6.41b. Closure of relay XL1 opens the circuits picking up the read-out relays, Fig. 6.40, and closes a circuit to energize the magnet of the rotary switch, Fig. 6.41b. The switch is then stepped three times at intervals of one second, and on the third step closes a circuit to reset the latch relay XL1 and energize XL2. A normally open contact, XL2-2, of the second time delay relay permits the rotary switch to make one further step. The reset of XL1 permits the read-out relays to be energized, and thus the cycle of coding is read again after an elapsed interval of four seconds. The circuit for a delay of 11 seconds is similar and is included in Fig. 6.41b.

There remains to be mentioned one further operating control of the calculator, the emergency stop buttons. One is located in the center of the operating panel, the other is centered in the set of switches on the operator's desk, Plate XXXV. These stop buttons cut off all power except a special alternating current circuit through the alarm lights. If either of these switches is used, care must be taken in restarting the calculator to synchronize and reset all components.

CHAPTER VII

THE ELEMENTARY FUNCTIONS

The elementary functions x^{-1}, $1/\sqrt{x}$, $\log_{10} x$, 10^x, $\cos x$, and $\arctan x$ are of frequent occurrence and are of interest for all values of the argument and function which fall within the capacity of a calculator. Therefore both sides of the present machine are equipped with functional units consisting of constant registers and of storage registers together with associated sensing and control circuits especially designed to supply these six functions. The accuracy of the functional units is such that the value of a function as delivered by them differs from the true value by less than eight units in the lowest order machine column.

The procedures and circuits employed in the computation of the reciprocal, the reciprocal square root, and the logarithm take full advantage of the fact that quantities are stored in the calculator in the semi-logarithmic form

$$x = \pm p \times 10^j,$$

where $1 \le p < 10$ and $-15 \le j \le +15$. The computation of the reciprocal is based on the equations

$$\bar{x} = k_1 |x|,$$

$$z \approx 1/\bar{x},$$

$$y_0 = k_1 z \approx 1/|x|,$$

$$e = \bar{x} z - 1,$$

$$x^{-1} = \frac{x}{|x|} y_0 (1-e)(1+e^2+e^4) + R_1. \tag{1}$$

The quantity k_1, where

$$k_1 = 5,\ 1 \le |x| < 2,$$

$$k_1 = 2,\ 2 \le |x| < 4,$$

$$k_1 = 1,\ 4 \le |x| < 10,$$

is chosen by a sensing circuit associated with register 061 which supplies $\bar{x} = k_1|x|$, thus reducing the range of the argument to $4 \le \bar{x} < 10$. Circuits controlled by register 062 select z from the 18 approximations stored in constant registers. The determination of y_0, e, and x^{-1} is carried out under code control. It can be shown that the value of R_1 is less than eight units in the lowest order machine column.

Figure 7.1 gives the five cycles of coding necessary to compute a reciprocal or perform a division, the extra coding required for the division being enclosed in parentheses. The quantity x is assumed to lie in register 001, the quantity a in register 020; x^{-1} is to be delivered to

PROBLEM x^{-1} TAPE ______ SECOND 1

LINE	FORMULA	SIGN	OUT	IN	OPER.
1				AUGEND	
2				ADDEND	
3				MULTIPLICAND 1	
4				MULTIPLIER 1	
5	argument $\|x\|$ from S.R.001 to T.R.	2	001	TRANSFER	
6			SUM		
7				AUGEND	
8				ADDEND	
9				MULTIPLICAND 2	
10				MULTIPLIER 2	
11	$\|x\|$ to Sensing R.061; position aux. relays		TRANSFER	061	57
12	select k_1		SUM		47
13	x to T.R.		001	TRANSFER	
14	x to Sign-Invert R.		TRANSFER	074	
15	$\bar{x} = k_1\|x\|$ to T.R.		127	TRANSFER	
16	$\bar{x}$ to Sensing R.062; position aux. relays		TRANSFER	062	57
17				TRANSFER	
18			TRANSFER		
19				AUGEND	
20	select $z \approx 1/\bar{x}$			ADDEND	51
21	z to T.R.		130	TRANSFER	
22	z to Sensing R.061; position aux. relays		TRANSFER	061	57
23			PRODUCT 1		
24			SUM		
25				AUGEND	
26				ADDEND	
27	$\frac{x}{\|x\|} y_0 = \frac{x}{\|x\|} k_1 z$ to T.R.	4	127	TRANSFER	
28	$\frac{x}{\|x\|} y_0$ to S.R.002		TRANSFER	002	
29			PRODUCT 2		
30			SUM		

Fig. 7.1 - Computation of reciprocal, cycle 1.

PROBLEM x^{-1} TAPE ______ SECOND 2

LINE	FORMULA	SIGN	OUT	IN	OPER.
1				AUGEND	
2				ADDEND	
3	$\bar{x}$ to MC.R.		062	MULTIPLICAND 1	
4	z to MP.R.		061	MULTIPLIER 1	
5				TRANSFER	
6			SUM		
7				AUGEND	
8				ADDEND	
9				MULTIPLICAND 2	
10				MULTIPLIER 2	
11			TRANSFER		
12			SUM		
13				TRANSFER	
14			TRANSFER		
15				TRANSFER	
16			TRANSFER		
17				TRANSFER	
18			TRANSFER		
19				AUGEND	
20				ADDEND	
21				TRANSFER	
22			TRANSFER		
23	$\bar{x}z$ to S.R.003		PRODUCT 1	003	
24			SUM		
25	$\bar{x}z$ to Aug.R.		003	AUGEND	
26	-1 to Add.R.	3	150	ADDEND	
27				TRANSFER	
28			TRANSFER		
29			PRODUCT 2		
30	$e = \bar{x}z - 1$ to S.R.004		SUM	004	

Fig. 7.1 continued - Computation of reciprocal, cycle 2.

PROBLEM x^{-1} TAPE ______ SECOND 3

LINE	FORMULA	SIGN	OUT	IN	OPER.
1	1 to Aug.R.		150	AUGEND	
2	$-e$ to Add.R.	1	004	ADDEND	
3	e to MC.R.		004	MULTIPLICAND 1	
4	e to MP.R.		004	MULTIPLIER 1	
5				TRANSFER	
6	$1-e$ to S.R.007		SUM	007	
7				AUGEND	
8				ADDEND	
9	$\frac{x}{\lvert x\rvert}y_0$ to MC.R.		002	MULTIPLICAND 2	
10	$1-e$ to MP.R.		007	MULTIPLIER 2	
11			TRANSFER		
12			SUM		
13				TRANSFER	
14			TRANSFER		
15				TRANSFER	
16			TRANSFER		
17				TRANSFER	
18			TRANSFER		
19				AUGEND	
20				ADDEND	
21				TRANSFER	
22			TRANSFER		
23	e^2 to S.R.005		PRODUCT 1	005	
24			SUM		
25	1 to Aug.R.		150	AUGEND	
26	e^2 to Add.R.		005	ADDEND	
27				TRANSFER	
28			TRANSFER		
29	$\frac{x}{\lvert x\rvert}y_0(1-e)$ to S.R.010		PRODUCT 2	010	
30	$1+e^2$ to S.R.006		SUM	006	

Fig. 7.1 continued - Computation of reciprocal, cycle 3.

PROBLEM x^{-1} TAPE ______ SECOND 4

LINE	FORMULA	SIGN	OUT	IN	OPER.
1				AUGEND	
2				ADDEND	
3	e^2 to MC.R.		005	MULTIPLICAND 1	
4	$1+e^2$ to MP.R.		006	MULTIPLIER 1	
5				TRANSFER	
6			SUM		
7				AUGEND	
8				ADDEND	
9	(a from S.R.020 to MC.R.)		(020)	MULTIPLICAND 2	
10	($\frac{x}{\lvert x\rvert}y_0(1-e)$ to MP.R.)		(010)	MULTIPLIER 2	
11			TRANSFER		
12			SUM		
13				TRANSFER	
14			TRANSFER		
15				TRANSFER	
16			TRANSFER		
17				TRANSFER	
18			TRANSFER		
19				AUGEND	
20				ADDEND	
21				TRANSFER	
22			TRANSFER		
23	e^2+e^4 to S.R.011		PRODUCT 1	011	
24			SUM		
25	e^2+e^4 to Aug.R.		011	AUGEND	
26	1 to Add.R.		150	ADDEND	
27				TRANSFER	
28			TRANSFER		
29	($\frac{x}{\lvert x\rvert}ay_0(1-e)$ to S.R.013)		PRODUCT 2	(013)	
30	$1+e^2+e^4$ to S.R.012		SUM	012	

Fig. 7.1 continued - Computation of reciprocal, cycle 4.

PROBLEM x^{-1} TAPE ______ SECOND 5

LINE	FORMULA	SIGN	OUT	IN	OPER.
1				AUGEND	
2				ADDEND	
3	$\frac{x}{\lvert x\rvert}y_0(1-e)$ to MC.R.		010	MULTIPLICAND 1	
4	$1+e^2+e^4$ to MP.R.		012	MULTIPLIER 1	
5				TRANSFER	
6			SUM		
7				AUGEND	
8				ADDEND	
9	($\frac{x}{\lvert x\rvert}ay_0(1-e)$ to MC.R.)		(013)	MULTIPLICAND 2	
10	($1+e^2+e^4$ to MP.R.)		(012)	MULTIPLIER 2	
11			TRANSFER		
12			SUM		
13				TRANSFER	
14			TRANSFER		
15				TRANSFER	
16			TRANSFER		
17				TRANSFER	
18			TRANSFER		
19				AUGEND	
20				ADDEND	
21				TRANSFER	
22			TRANSFER		
23	$x^{-1}=\frac{x}{\lvert x\rvert}y_0(1-e)(1+e^2+e^4)$ to S.R.014		PRODUCT 1	014	
24			SUM		
25				AUGEND	
26				ADDEND	
27				TRANSFER	
28			TRANSFER		
29	(a/x to S.R.015)		PRODUCT 2	(015)	
30			SUM		

Fig. 7.1 concluded - Computation of reciprocal, cycle 5.

register 014 and a/x to register 015. The coding required to determine $\bar{x}$, z, and y_0 is included in the first cycle and will be discussed in detail. Operation-codes used when coding for the right side of the calculator follow the left codes in parentheses.

The positive absolute value of the argument x is transferred to register 061 accompanied by operation-code 57, lines 5 and 11. Operation-code 47 (50), line 12, permits a sensing circuit to select the appropriate value of k_1. The algebraic sign of x is stored in the sign-invert register 074, lines 13 and 14. Out-code (127) reads $\bar{x} = k_1|x|$ from register 061 to the transfer register, line 15. At least one line of coding must intervene between the entry of operation-code 47 (50), and the use of out-code (127). The quantity $\bar{x}$ is delivered to register 062 accompanied by operation-code 57, line 16. Operation-code 51 (52) selects $z \approx 1/\bar{x}$ and must be followed on the next succeeding line by out-code (130) which delivers z to the transfer register, lines 20 and 21. The approximation z is routed to register 061 accompanied by operation-code 57, line 22. Since the latch relay storing k_1 has not been reset, $y_0 = k_1 z$ may be read out of register 061 by using out-code (127), line 27. The entry of sign-code 4 on line 27 provides the correct algebraic sign for x^{-1}.

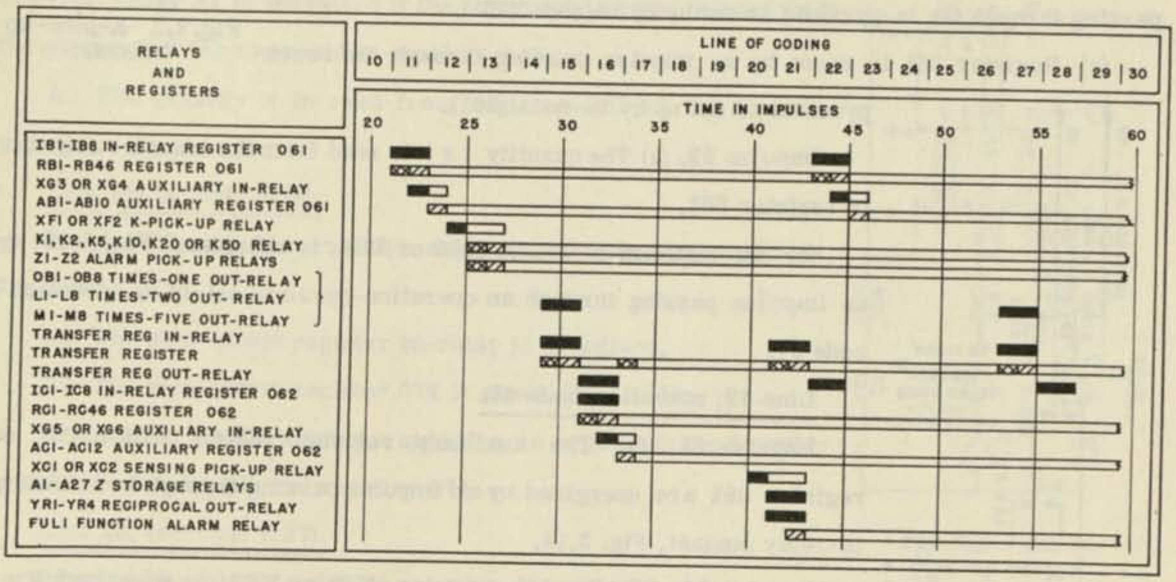

Fig. 7.2 - Timing of reciprocal computation.

An alarm relay is energized and the calculator is stopped if the argument read into register 061 is (1) equal to zero or (2) has an exponent equal to $+15$.

The remaining cycles of the reciprocal coding make use of the addition and multiplication units to compute the values of e and of x^{-1}. It should be noted that the evaluation of $(1+e^2+e^4)$ is carried out in the form $(e^2+1)\,e^2+1$, and that the multiplication by a required for a division may be entered in cycle 4.

In the following detailed description of the first cycle of coding required to obtain a reciprocal, only those lines of coding and impulse times containing operations necessary to the procedure will be described. Figure 7.2 shows the timing of the relays and registers used in the operations.

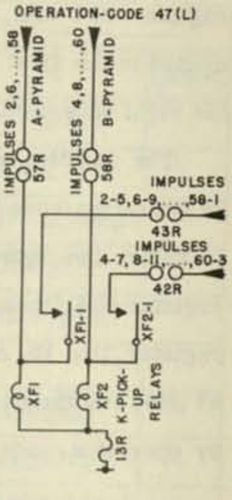

Fig. 7.3 - K-pick-up relays.

Line 11; in-code (061), operation-code 57.

Impulse 21. (a) The transfer register out-relay is energized, Fig. 6.28.

(b) The in-relay of register 061, IB1-IB8, is energized by an impulse passing through the in-pyramid as set up by in-code (061).

(c) Register 061 is reset by an impulse passing through the reset-pyramid as set up by in-code (061).

Impulse 22. (a) The quantity $|x|$ is read from the transfer register to register 061.

(b) An auxiliary in-relay, XG3 or XG4, is energized, Fig. 3.13, by an impulse passing through an operation-pyramid set up by operation-code 57.

Line 12; operation-code 47.

Impulse 23. (a) The auxiliary register relays, AB1-AB10, of register 061 are energized by an impulse passing through an auxiliary in-relay contact, Fig. 3.14.

Impulse 24. (a) A K-pick-up relay, XF1 or XF2, is energized, Fig. 7.3, by an impulse passing through an operation-pyramid set up by operation-code 47.

Line 13; out-code 001.

Impulse 25. (a) The K-relays are reset by an impulse passing through a K-pick-up relay contact, Fig. 7.4. It should be noted that the K-relays are reset only by operation-code 47, and once energized remain latched in that position until the code is repeated.

(b) The alarm pick-up relays, Z1 and Z2, are reset by an impulse passing through a K-pick-up

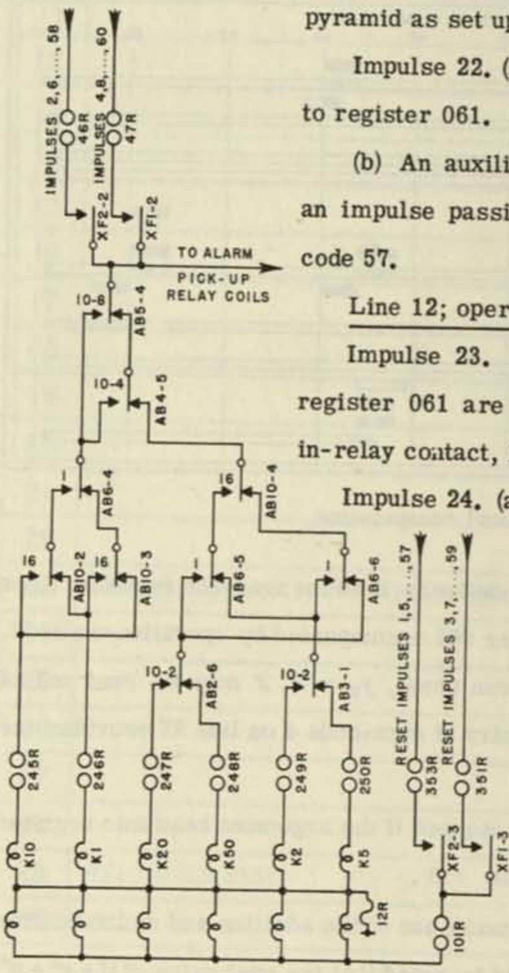

Fig. 7.4 - Sensing circuit.

relay contact, Fig. 7.5.

(c) The register 001 out-relays are energized, Fig. 3.1.

(d) The transfer register in-relays are energized, Fig. 6.29.

(e) The transfer register is reset, Fig. 6.29.

Impulse 26. (a) A K-relay is energized by an impulse passing through the sensing circuit, Fig. 7.4. The ranges of $|x|$ and the corresponding K-relays are tabulated in Fig. 7.6.

(b) The alarm pick-up relays may be energized by an impulse passing through a K-pick-up relay contact, Fig. 7.5. Relay Z2 is energized if the argument read into register 061 is less than or equal to zero. Relay Z1 is energized if the argument is equal to zero or if the exponent of the argument is equal to $+15$.

(c) The quantity x is read from register 001 to the transfer register.

Line 14; in-code (074).

Impulse 27. (a) The transfer register out-relay is energized, Fig. 6.28.

(b) The sign-invert register in-relay is energized.

(c) The sign-invert register 074 is reset, Fig. 3.11a.

Impulse 28. (a) The algebraic sign of x is read from the transfer register to the sign-invert register 074.

Line 15; out-code (127).

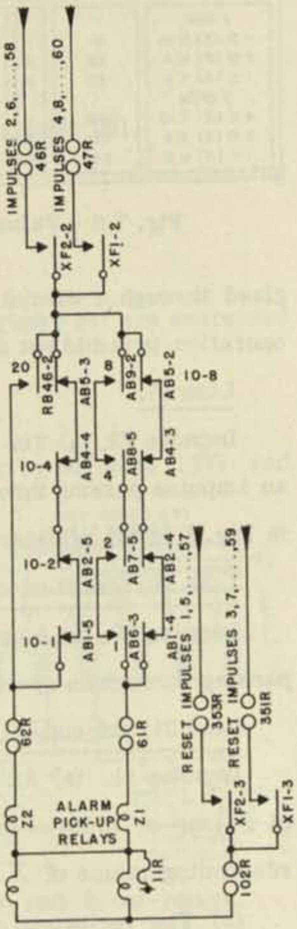

Fig. 7.5 - Alarm pick-up relays.

Impulse 29. (a) An impulse passing through the out-pyramid set up by out-code (127) and through a contact of the K-relay energized during impulse 26, energizes a times-k_1 out-relay, a times-one, times-two, or times-five out-relay, Fig. 7.7. This out-code (127) may not be used until the K-relays are energized; that is, at least two lines of coding after the entry of operation-code 47.

(b) The transfer register in-relay is energized, Fig. 6.29.

(c) The transfer register is reset, Fig. 6.29.

Impulse 30. (a) The quantity $\bar{x} = k_1|x|$ is read from register 061, Fig. 3.17, through the times-k_1 out-relay contacts to the transfer register.

Line 16; in-code (062), operation-code 57.

Impulse 31. (a) The transfer register out-relay is energized, Fig. 6.28.

(b) The in-relay of register 062, IC1-IC8, is energized by an impulse passing through the

RANGE OF $\|X\|$	K-RELAY	k_1	k_2	k_3	$\sqrt{k_4}$	k_5
j ODD						
$4 \leq \|X\| < 10$	K1	1	0	1	1	1
$2 \leq \|X\| < 4$	K2	2	0	1	$\sqrt{2}$	$\log_{10} 5$
$1 \leq \|X\| < 2$	K5	5	0	1	$\sqrt{5}$	$\log_{10} 2$
j EVEN						
$4 \leq \|X\| < 10$	K10	1	1	1	$\sqrt{10}$	1
$2 \leq \|X\| < 4$	K20	2	1	2	$\sqrt{5}$	$\log_{10} 5$
$1 \leq \|X\| < 2$	K50	5	1	5	$\sqrt{2}$	$\log_{10} 2$

Fig. 7.6 - Values of k's.

in-pyramid as set up by in-code (062).

(c) Register 062 is reset by an impulse passing through the reset-pyramid as set up by in-code (062).

Impulse 32. (a) The quantity $\bar{X}$ is read from the transfer register into register 062.

(b) An auxiliary in-relay, XG5 or XG6, is energized through a circuit similar to that shown in Fig. 3.13, by an impulse passing through an operation-pyramid set up by operation-code 57.

Line 17.

Impulse 33. (a) The auxiliary register relays, AC1-AC12, of register 062 are energized by an impulse passing through an auxiliary in-relay contact. The circuit is similar to that shown in Fig. 3.14 for register 061.

Line 20; operation-code 51.

Impulse 40. (a) A sensing pick-up relay, XC1 or XC2, is energized, Fig. 7.8, by an impulse passing through an operation-pyramid set up by operation-code 51.

Line 21; out-code (130).

Impulse 41. (a) An impulse passing through the sensing circuit of Fig. 7.8 selects a value of Z (one or more of the relays A1-A27) where $z = Z \times 10^{-j-1}$. The ranges of $\bar{X}$ and the corresponding values of Z are shown in Fig. 7.8.

(b) The reciprocal out-relays, YR1-YR4, are energized by an impulse passing through an out-pyramid set up by out-code (130), Fig. 7.9.

(c) The transfer register in-relay is energized, Fig. 6.29.

(d) The transfer register is reset, Fig. 6.29.

Impulse 42. (a) The quantity $z = Z \times 10^{-j-1}$ is read from a constant register, one or more relays, A1-A27, selected by the sensing circuit, to the transfer register. The quantity Z is read through the reciprocal out-relay contacts to the transfer buss, Fig. 7.9. The exponent j standing in register 062 is inverted and a one subtracted from it by the circuit shown on the left in Fig. 7.9. Thus $-j-1$ is read through the out-relay contacts to the buss.

(b) If alarm relay Z1 was energized (impulse 26) the function alarm relay FUL1 is energized, Fig. 7.10. Impulse 38 of the next succeeding cycle will then energize the main machine alarm relay thus stopping the calculator at the end of that cycle (cf. pages 143-144). The machine will not be stopped at the end of the current cycle because the alarm occurred after the eighteenth line of coding.

Line 22; in-code (061), operation-code 57.

Impulse 43. (a) The transfer register out-relay is energized, Fig. 6.28.

(b) The in-relay of register 061, IB1-IB8, is energized.

(c) Register 061 is reset.

Impulse 44. (a) The quantity z is read from transfer register to register 061.

(b) An auxiliary in-relay, XG3 or XG4, is energized, Fig. 3.13, by an impulse passing through an operation-pyramid set up by operation-code 57.

Line 23.

Impulse 45. (a) The auxiliary register relays, AB1-AB10, of register 061 are energized by an impulse passing through an auxiliary in-relay contact, Fig. 3.14.

Line 27; sign-code 4, out-code (127).

Impulse 53. (a) An impulse passing through the out-pyramid set up by out-code (127) and through a contact of the K-relay energized during impulse 26, energizes a times-k_1 out-relay, a times-one, times-two, or times-five out-relay, Fig. 7.7.

(b) The transfer register in-relay is energized, Fig. 6.29.

(c) The transfer register is reset, Fig. 6.29.

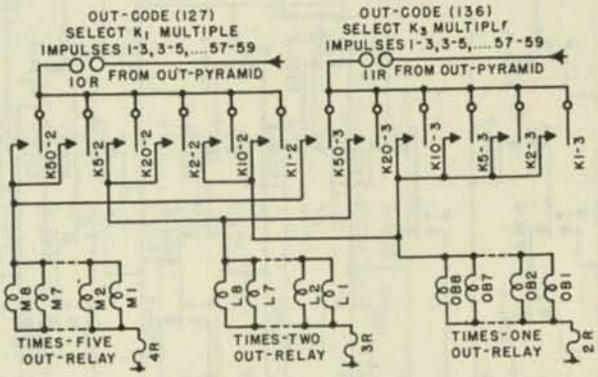

Fig. 7.7 - Times-k_1 and k_3 out-relays.

Impulse 54. (a) The quantity $\frac{x}{|x|}y_0 = \frac{x}{|x|}k_1 z$ is transferred from register 061, Fig. 3.17, through the times-k_1 out-relay contacts to the transfer register. The algebraic sign is imposed by the sign-invert register as shown in Fig. 3.5.

No operation-code except 47, 50, or 57 should be entered in the last line of coding of a cycle, since if the machine is stopped at the end of the cycle their effect will be lost. The operation-codes 47, 50, and 57 control latch relays and therefore may be used at any time.

The reciprocal square root is computed by means of the equations

$$\bar{x} = k_1 x\, 10^{k_2} = k_1 \rho \times 10^{j + k_2},$$

$$z \approx 1/\bar{x},$$

$$\sqrt{z} \approx 1/\sqrt{\bar{x}}\ ,$$

$$e = \bar{x} z - 1,$$

$$1/\sqrt{x} = k_3 \sqrt{k_4} \sqrt{z}\ (1 + e)^{-1/2},$$

$$1/\sqrt{x} = k_3 \sqrt{k_4} \sqrt{z}\ (1 + a_1 e + a_2 e^2 + a_3 e^3 + a_4 e^4) + R_2 . \qquad (2)$$

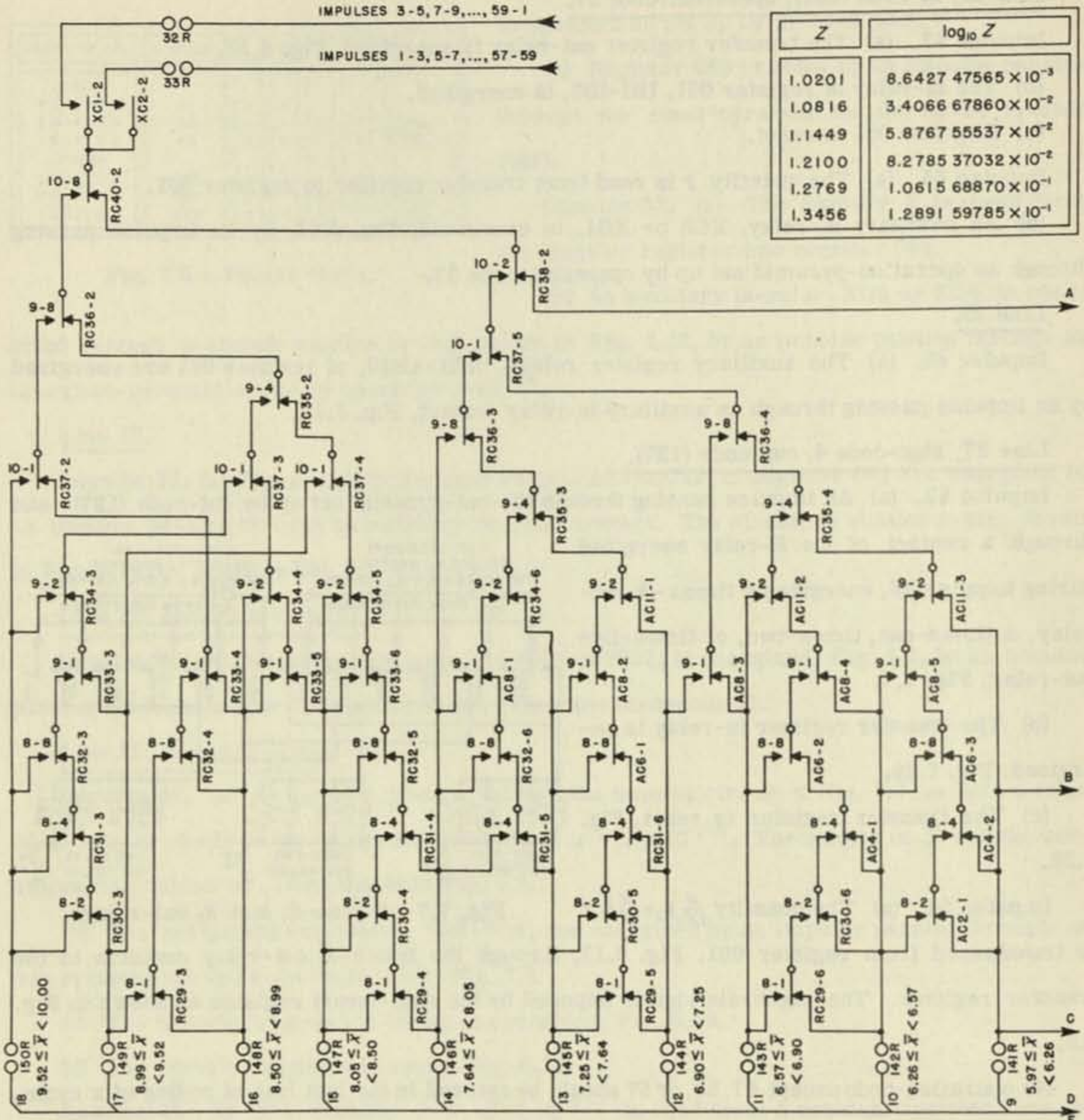

Z	$\log_{10} Z$
1.0201	$8.6427\ 47565 \times 10^{-3}$
1.0816	$3.4066\ 67860 \times 10^{-2}$
1.1449	$5.8767\ 55537 \times 10^{-2}$
1.2100	$8.2785\ 37032 \times 10^{-2}$
1.2769	$1.0615\ 68870 \times 10^{-1}$
1.3456	$1.2891\ 59785 \times 10^{-1}$

Fig. 7.8 - Sensing circuit for approximations.

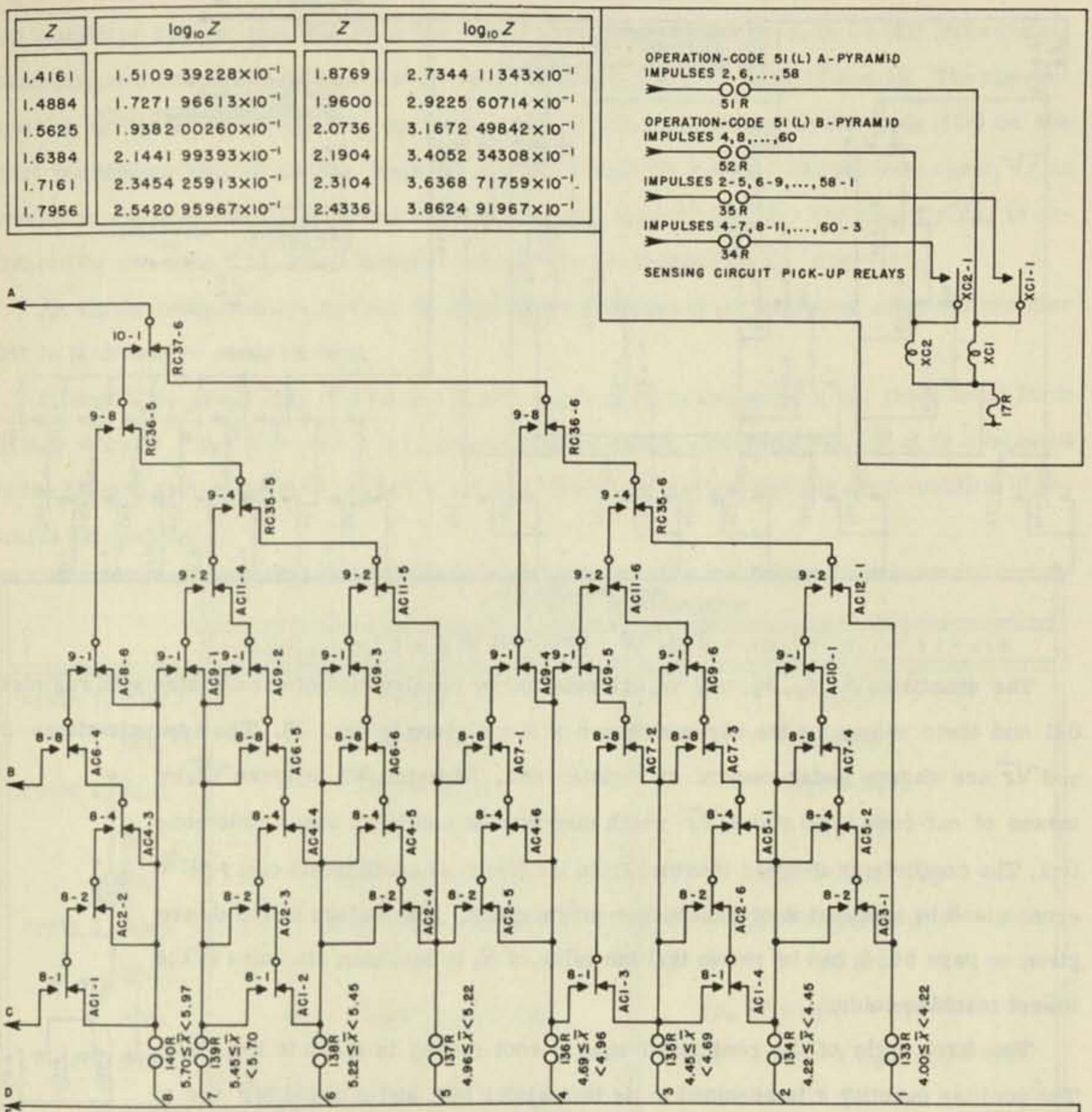

Z	$\log_{10} Z$	Z	$\log_{10} Z$
1.4161	1.5109 39228×10⁻¹	1.8769	2.7344 11343×10⁻¹
1.4884	1.7271 96613×10⁻¹	1.9600	2.9225 60714×10⁻¹
1.5625	1.9382 00260×10⁻¹	2.0736	3.1672 49842×10⁻¹
1.6384	2.1441 99393×10⁻¹	2.1904	3.4052 34308×10⁻¹
1.7161	2.3454 25913×10⁻¹	2.3104	3.6368 71759×10⁻¹.
1.7956	2.5420 95967×10⁻¹	2.4336	3.8624 91967×10⁻¹

Fig. 7.8 continued - Sensing circuit for approximations.

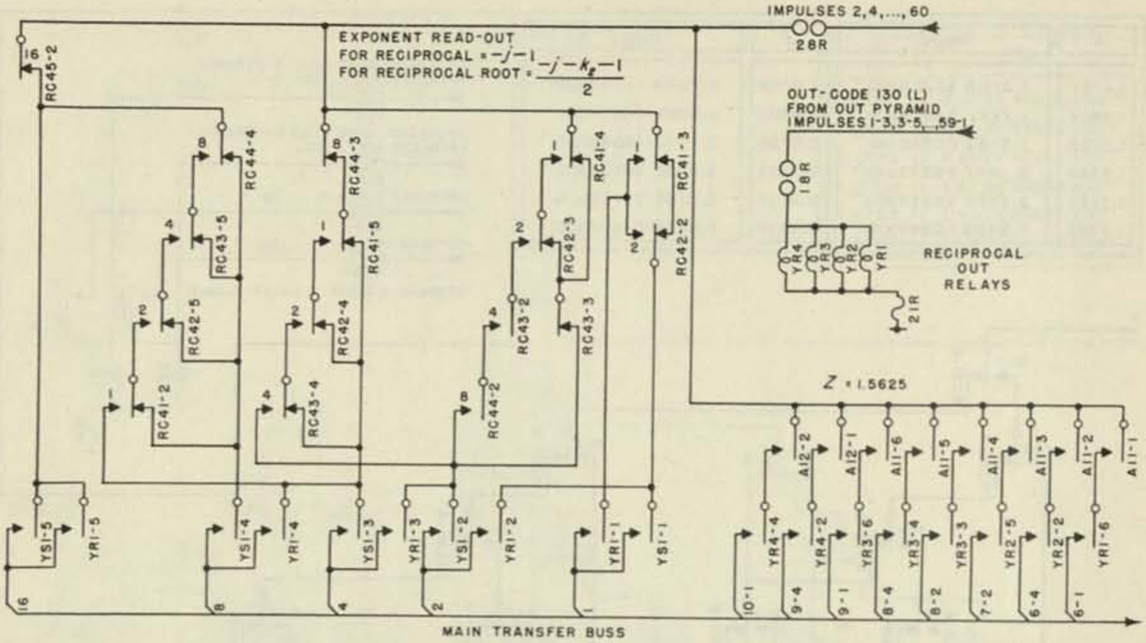

Fig. 7.9 - Read-out of Z.

The quantities k_1, k_2, k_3, and $\sqrt{k_4}$ are selected by sensing circuits associated with register 061 and their values for the various ranges of x are given in Fig. 7.6. The approximations Z and $\sqrt{Z}$ are chosen under control of register 062. Register 061 delivers $\sqrt{k_4}$ by means of out-code (137) and $k_3\sqrt{Z}$ which may then be combined under code control. The coefficients a_i were obtained from the binomial coefficients of $(1+e)^{-1/2}$ economized by application of Tchebychev polynomials. The values of the a_i are given on page 54. It can be shown that the value of R_2 is less than six units in the lowest machine column.

The first cycle of the reciprocal square root coding is given in Fig. 7.11. The positive quantity x is assumed to lie in register 001, and Z and $k_3\sqrt{Z}$ are to be determined and delivered to registers 002 and 003. The quantity x is transferred to register 061 accompanied by operation-code 57, lines 5 and 11. Operation-code 47 (50), line 12, permits a sensing circuit to select the required value of k_1. Operation-code 45 (46) selects the value of k_2 and prepares to add it to the exponent, line 14. Out-code (127) reads $\bar{x} = k_1 x 10^{k_2}$ from register 061, line 15. At least one line of coding must intervene between the entry of operation-code 47 (50) and the use of the out-code (127). Operation-code 45 (46) must immediately precede out-code (127) if the k_2 correction is to be made. Register 062 receives the quantity $\bar{x}$ accompanied by operation-code 57 which positions

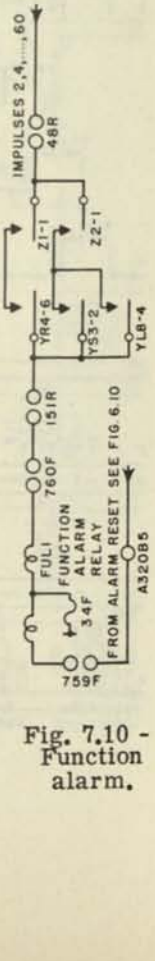

Fig. 7.10 - Function alarm.

the auxiliary relays, line 16. As in the reciprocal coding, operation-code 51 (52) immediately preceding out-code (130) selects and the latter delivers $z \approx 1/\bar{x}$, lines 18 and 19. The approximation $\sqrt{z} \approx 1/\sqrt{x}$ is selected by operation-code 51 (52) and read out by out-code (135) on the next succeeding line of coding, lines 20 and 21. Since the K-relay has not been reset, $\sqrt{z}$ is routed to register 061, line 22, and multiplied by k_3, lines 27 and 28. The quantity $\sqrt{k_4}$ is delivered by out-code (137) when required for substitution in equation (2), Fig. 7.14.

An alarm relay is energized and the calculator is stopped if the argument read into register 061 is less than or equal to zero.

It should be noted that if $(1 + a_1 e + a_2 e^2 + a_3 e^3 + a_4 e^4)$ is evaluated in the more usual form $(((a_4 e + a_3) e + a_2) e + a_1) e + 1$, four complete cycles are required. If it is evaluated in the form $((a_4 e + a_3) e + a_2) e^2 + 1 + a_1 e$ but three cycles and the first addition of the fourth are required.

	Method of Evaluation	
	$(((a_4 e + a_3) e + a_2) e + a_1) e + 1$	$((a_4 e + a_3) e + a_2) e^2 + 1 + a_1 e$
cycle 1, mult.	$(a_4)(e)$	$(a_4)(e)$
add.	$a_4 e + a_3$	$a_4 e + a_3$
cycle 2, mult.	$(a_4 e + a_3) e$	$(a_4 e + a_3) e$
mult.		$(e)(e)$
add.	$(a_4 e^2 + a_3 e) + a_2$	$(a_4 e^2 + a_3 e) + a_2$
cycle 3, mult.	$(a_4 e^2 + a_3 e + a_2) e$	$(a_4 e^2 + a_3 e + a_2) e^2$
mult.		$(a_1)(e)$
add.	$a_4 e^3 + a_3 e^2 + a_2 e + a_1$	$(a_4 e^4 + a_3 e^3 + a_2 e^2) + 1$
cycle 4, add.		$(a_4 e^4 + a_3 e^3 + a_2 e^2 + 1) + a_1 e$
mult.	$(a_4 e^3 + a_3 e^2 + a_2 e + a_1) e$	
add.	$(a_4 e^4 + a_3 e^3 + a_2 e^2 + a_1 e) + 1$	
Time required	4 seconds	3.2 seconds

Figure 7.12 shows the timing of the relays and registers used during the first cycle of reciprocal square root coding. Only those lines of coding and impulse times containing operations necessary to the computation will be described.

Line 11; in-code (061), operation-code 57.

Impulse 21. (a) The transfer register out-relay is energized, Fig. 6.28.

(b) The in-relay of register 061, IB1-IB8, is energized by an impulse passing through the in-pyramid as set up by in-code (061).

PROBLEM $1/\sqrt{x}$ TAPE ______ SECOND 1

LINE	FORMULA	SIGN	OUT	IN	OPER.
1				AUGEND	
2				ADDEND	
3				MULTIPLICAND 1	
4				MULTIPLIER 1	
5	argument x from S.R.001 to T.R.	2	001	TRANSFER	
6			SUM		
7				AUGEND	
8				ADDEND	
9				MULTIPLICAND 2	
10				MULTIPLIER 2	
11	x to Sensing R.061; position aux. relays		TRANSFER	061	57
12	select K-relay		SUM		47
13				TRANSFER	
14	prepare to add k_2 to exponent		TRANSFER		45
15	$\bar{x} = k_1 x 10^{k_2}$ to T.R.		127	TRANSFER	
16	$\bar{x}$ to Sensing R.062; position aux. relays		TRANSFER	062	57
17				TRANSFER	
18	select $z \approx 1/\bar{x}$		TRANSFER		51
19	z to Aug.R. for transfer		130	AUGEND	
20	select $\sqrt{z} \approx 1/\sqrt{\bar{x}}$			ADDEND	51
21	$\sqrt{z}$ to T.R.		135	TRANSFER	
22	$\sqrt{z}$ to Sensing R.061; position aux. relays		TRANSFER	061	57
23			PRODUCT 1		
24	z to S.R.002		SUM	002	
25				AUGEND	
26				ADDEND	
27	$k_3\sqrt{z}$ to T.R.		136	TRANSFER	
28	$k_3\sqrt{z}$ to S.R.003		TRANSFER	003	
29			PRODUCT 2		
30			SUM		

Fig. 7.11 - Computation of reciprocal square root.

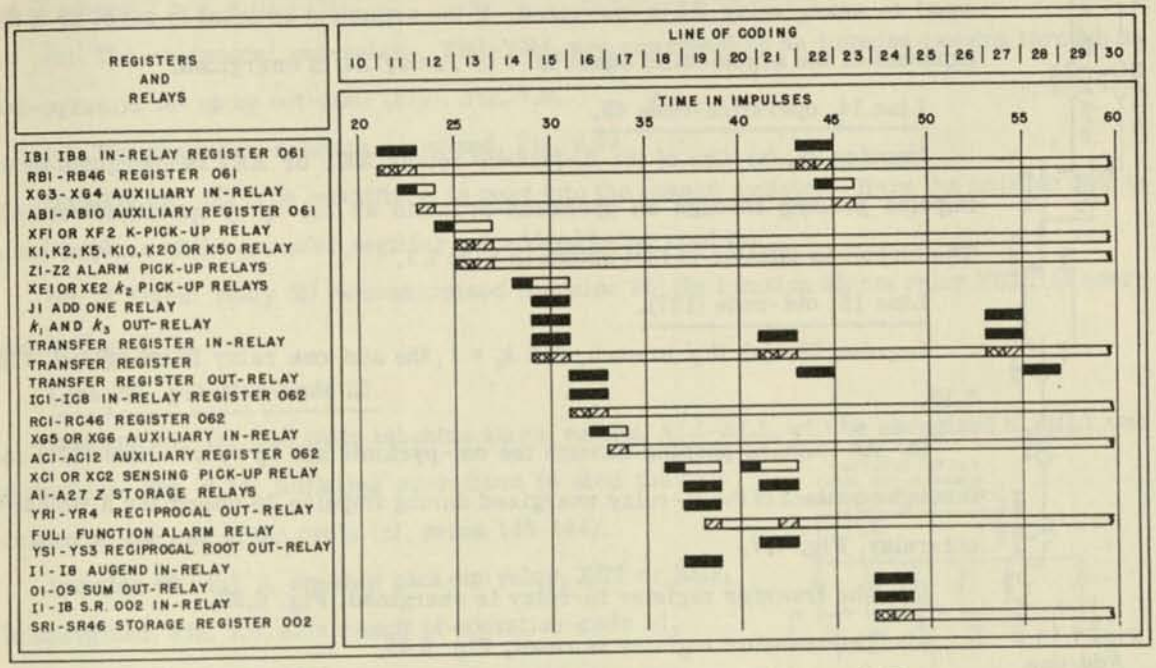

Fig. 7.12 - Timing of reciprocal square root computation.

(c) Register 061 is reset by an impulse passing through the reset-pyramid set up by in-code (061).

Impulse 22. (a) The quantity x is read from the transfer register to register 061.

(b) An auxiliary in-relay, XG3 or XG4, is energized, Fig. 3.13, by an impulse passing through an operation-pyramid set up by operation-code 57.

Line 12; operation-code 47.

Impulse 23. (a) The auxiliary register relays, AB1-AB10, of register 061 are energized by an impulse passing through an auxiliary in-relay contact, Fig. 3.14.

Impulse 24. (a) A K-pick-up relay, XF1 or XF2, is energized, Fig. 7.3, by an impulse passing through an operation-pyramid set up by operation-code 47.

Line 13.

Impulse 25. (a) The K-relays are reset by an impulse passing through a K-pick-up relay contact, Fig. 7.4.

(b) The alarm pick-up relays Z1 and Z2 are reset by an impulse passing through a K-pick-up relay contact, Fig. 7.5.

Impulse 26. (a) A K-relay is energized by an impulse passing through the sensing circuit, Fig. 7.4. The ranges of x and the corresponding K-relays are tabulated in Fig. 7.6.

(b) The alarm pick-up relays may be energized by an impulse passing through a K-pick-up

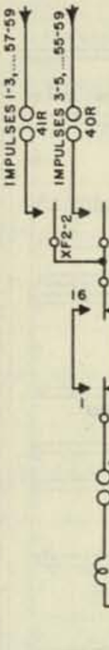

Fig. 7.13 - Add-one relay.

relay contact, Fig. 7.5. If the argument read into register 061 is less than or equal to zero, relay Z2 is energized. If the argument is equal to zero, or if the exponent of the argument is equal to + 15 , relay Z1 is energized.

Line 14; operation-code 45.

Impulse 28. (a) One of the k_2-pick-up relays XE1 or XE2 is energized by an impulse passing through an operation-pyramid as set up by operation-code 45. The circuit is similar to that shown in Fig. 7.3.

Line 15; out-code (127).

Impulse 29. (a) If j is even, and $k_2 = 1$, the add-one relay is energized, Fig. 7.13.

(b) An impulse passing through the out-pyramid set up by out-code (127) and through a contact of the K-relay energized during impulse 26 energizes a times-k_1 out-relay, Fig. 7.7.

(c) The transfer register in-relay is energized, Fig. 6.29.

(d) The transfer register is reset, Fig. 6.29.

Impulse 30. (a) The quantity $\bar{x} = k_1 \times 10^{k_2}$ is read from register 061 to the transfer register. The quantity $k_1 p$ is read through the times-k_1 circuit, Fig. 3.17. The quantity k_2 is added to the exponent by the add-one-or-zero circuit, Fig. 3.16d.

Line 16; in-code (062), operation-code 57.

Impulse 31. (a) The transfer register out-relay is energized, Fig. 6.28.

(b) The in-relay of register 062, IC1-IC8, is energized by an impulse passing through the in-pyramid as set up by in-code (062).

(c) Register 062 is reset by an impulse passing through the reset-pyramid as set up by in-code (062).

Impulse 32. (a) The quantity $\bar{x}$ is read from the transfer register into register 062.

(b) An auxiliary in-relay, XG5 or XG6, is energized by an impulse passing through an operation-pyramid set up by operation-code 57.

Line 17.

Impulse 33. (a) The auxiliary register relays, AC1-AC12, of register 062 are energized by an impulse passing through a circuit similar to that shown in Fig. 3.14.

Line 18; operation-code 51.

Impulse 36. (a) A sensing pick-up relay, XC1 or XC2, is energized, Fig. 7.8, as a result of operation-code 51.

Line 19; out-code (130).

Impulse 37. (a) An impulse passing through the sensing circuit of Fig. 7.8 selects a value of Z where $z = Z \times 10^{-j-k_2-1}$.

(b) The reciprocal out-relays, YR1-YR4, are energized by an impulse passing through an out-pyramid set up by out-code (130), Fig. 7.9.

(c) The augend in-relay is energized, Fig. 6.29.

Impulse 38. (a) The quantity z is read into the augend register. Here the addition unit is used in place of the transfer register, no addend being read in.

(b) If alarm relay Z1 was energized (impulse 26) the function alarm relay FUL1 is energized, Fig. 7.10.

Line 20; operation-code 51.

Impulse 39. (a) The main machine alarm relays, AL1-AL2, will be energized if FUL1 was picked up, Fig. 6.34, initiating operations to stop the calculator at the end of the cycle (cf. pages 143-144).

Impulse 40. (a) A sensing pick-up relay, XC1 or XC2, is energized, Fig. 7.8, as a result of operation-code 51.

Line 21; out-code (135).

Impulse 41. (a) An impulse passing through the sensing circuit of Fig. 7.8 selects a value of $\sqrt{Z}$ where $z=Z\times 10^{-j-k_2-1}$.

(b) The reciprocal square root out-relays, YS1-YS3, are energized under control of out-code (135).

(c) The transfer register in-relay is energized, Fig. 6.29.

(d) The transfer register is reset, Fig. 6.29.

Impulse 42. (a) The quantity $\sqrt{Z} \times 10^{-(j+k_2+1)/2}$ is read into the transfer register. The approximation $\sqrt{Z}$ is supplied by one of the relays, B1-B18, energized by the sensing circuit of Fig. 7.8. The exponent $-(j+k_2+1)/2$ is supplied by the circuit shown on the left in Fig. 7.9.

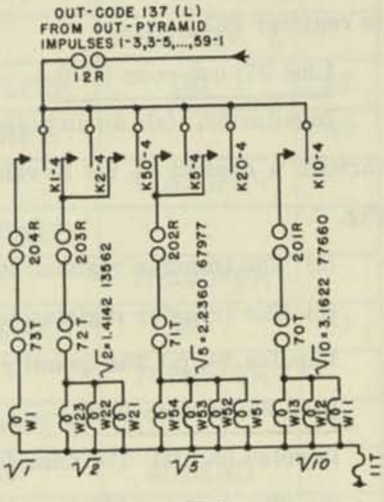

Fig. 7.14 $-\sqrt{k_4}$ read-out.

(b) If alarm pick-up relay Z2 was energized by impulse 26, the function alarm relay FUL1 will be energized, Fig. 7.10. The main machine alarm relay will be picked up by impulse 38 of the next succeeding cycle.

Line 22; in-code (061), operation-code 57.

Impulse 43. (a) The transfer register out-relay is energized, Fig. 6.28.

(b) The in-relay of register 061, IB1-IB8, is energized as in impulse 21.

(c) Register 061 is reset.

Impulse 44. (a) The approximation $\sqrt{z} \doteq \sqrt{Z} \times 10^{-(j+k_2+1)/2}$ is read from the transfer register to register 061.

(b) An auxiliary in-relay, XG3 or XG4, is energized, Fig. 3.13, by an impulse passing through an operation-pyramid set up by operation-code 57.

Line 23.

Impulse 45. (a) The auxiliary register relays, AB1-AB10, of register 061 are energized as in impulse 23.

Line 24; in-code (002).

Impulse 47. (a) The sum out-relay is energized as described on page 79.

(b) The register 002 in-relay is energized.

(c) Register 002 is reset.

Impulse 48. (a) The quantity z is transferred from the sum register of the addition unit to register 002.

Line 27; out-code (136).

Impulse 53. (a) An impulse passing through the out-pyramid set up by out-code (136) and through a contact of the K-relay energized during impulse 26 picks up a times-k_3 out-relay, Fig. 7.7.

(b) The transfer register in-relay is energized, Fig. 6.29.

(c) The transfer register is reset.

Impulse 54. (a) The quantity $k_3\sqrt{z}$ is read from register 061 to the transfer register.

Line 28; in-code (003).

Impulse 55. (a) The transfer register out-relay is energized, Fig. 6.28.

(b) The register 003 in-relay is energized.

(c) Register 003 is reset.

Impulse 56. (a) Register 003 receives the quantity $k_3\sqrt{z}$.

The computation of the logarithm is based on the equations

$$\bar{x} = k_1 x,$$

$$z \approx 1/\bar{x}, \quad z = Z \times 10^{-j-1},$$

$$e = \bar{x} z - 1,$$

$$\log_{10} x = j + k_5 - \log_{10} Z + \log_{10}(1+e),$$

$$\log_{10} x = j + k_5 - \log_{10} Z + b_1 e + b_2 e^2 + b_3 e^3 + b_4 e^4 + R_3 . \qquad (3)$$

Register 061 selects the values of k_1 and k_5 and supplies $\bar{x} = k_1 x$. The values of k_1 and k_5 for the various ranges of x are tabulated in Fig. 7.6. The sensing circuits of register 062 deliver the approximation $z = Z \times 10^{-j-1}$ with five significant digits and $\log_{10} Z$ to ten significant digits. Tchebychev polynomials were used to derive the values of the coefficients b_i from the coef-

PROBLEM $\log_{10} x$ TAPE ______ SECOND 1

LINE	FORMULA	SIGN	OUT	IN	OPER.
1				AUGEND	
2				ADDEND	
3				MULTIPLICAND 1	
4				MULTIPLIER 1	
5	argument x from S.R.001 to T.R.		001	TRANSFER	
6			SUM		
7				AUGEND	
8				ADDEND	
9				MULTIPLICAND 2	
10				MULTIPLIER 2	
11	x to Sensing R.061; position aux. relays		TRANSFER	061	57
12	select K-relay		SUM		47
13				TRANSFER	
14			TRANSFER		
15	$\bar{x} = k_1 x$ to T.R.		127	TRANSFER	
16	$\bar{x}$ to Sensing R.062; position aux. relays		TRANSFER	062	57
17				TRANSFER	
18	select $\log_{10} Z$		TRANSFER		51
19	$-\log_{10} Z$ to Aug.R.	3	146	AUGEND	
20	k_5 to Add.R.; select $z \approx 1/\bar{x}$		147	ADDEND	51
21	z to T.R.		130	TRANSFER	
22	z to S.R.004		TRANSFER	004	
23			PRODUCT 1		
24	$(k_5 - \log_{10} Z)$ to S.R.002		SUM	002	
25	$(k_5 - \log_{10} Z)$ to Aug.R.		002	AUGEND	
26	j to Add.R.		145	ADDEND	
27				TRANSFER	
28			TRANSFER		
29			PRODUCT 2		
30	$(j + k_5 - \log_{10} Z)$ to S.R.003		SUM	003	

Fig. 7.15 - Computation of logarithm.

ficients of the expansion of $\log_{10}(1+e)$. The values of the b_i are listed on page 54. The maximum value of R_3 is less than three units in the first machine column.

The first cycle of coding necessary to obtain the logarithm of x is given in Fig. 7.15. In this cycle, the approximations to z and $\log_{10} Z$ are obtained, the value of k_5 is read out under control of register 061, and the exponent j of x is translated from binary to decimal notation for use in the computation of the characteristic. The determination of e and of $\log_{10} x$ may then be carried out in 4.2 more cycles using the addition and multiplication units. The quantity x is assumed to lie in register 001, the quantity z is to be delivered to register 004, and

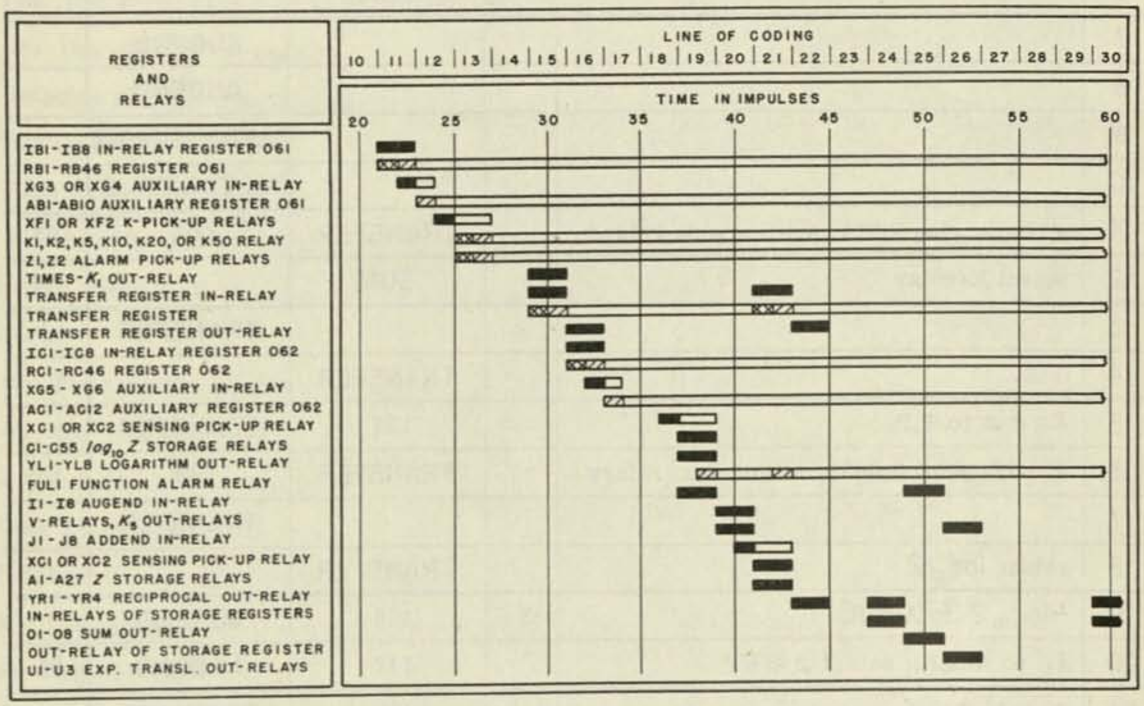

Fig. 7.16 - Timing of logarithm computation.

$(j+k_5-\log_{10}Z)$ to register 003. Register 061 controls the determination of $\bar{x}=k_1 x$ and the K-relay, lines 11, 12, and 15, as in the reciprocal coding. Register 062, operation-code 51 (52), selects the approximations z and $\log_{10} Z$, lines 16, 18, 19, 20, and 21. The correction k_5, out-code (147), is selected by the K-relay in connection with register 061, line 20. The translation of the exponent j from binary to coded decimal notation, line 26, is also carried out under control of register 061, out-code (145).

Figure 7.16 shows the timing of the various registers and relays involved in the first cycle of coding for the computation of the logarithm. As customary, in the description of this cycle of coding only those operations pertinent to the computation of the logarithm will be discussed.

Line 11; in-code (061), operation-code 57.

Impulse 21. (a) The transfer register out-relay is energized, Fig. 6.28.

(b) The in-relay of register 061 is energized.

(c) Register 061 is reset.

Impulse 22. (a) The quantity x is read from the transfer register into the sensing register 061.

(b) One of the auxiliary in-relays, XG3 or XG4, is energized as a result of the reading of operation-code 57.

Line 12; operation-code 47.

Impulse 23. (a) The auxiliary register relays, AB1-AB10, of register 061 are energized.

Impulse 24. (a) The K-pick-up relay, XF1 or XF2, is energized by an impulse passing through the operation-pyramid set up by operation-code 47, Fig. 7.3.

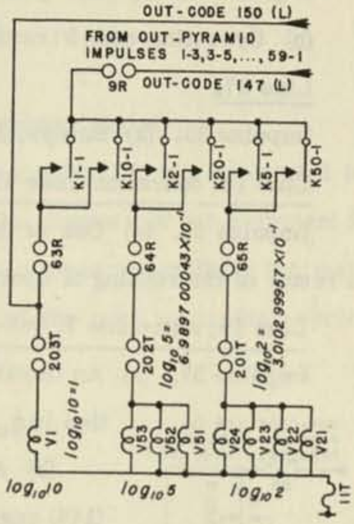

Fig. 7.17 - k_5 read-out.

Line 13.

Impulse 25. (a) The K-relays are reset by an impulse passing through a K-pick-up relay contact, Fig. 7.4.

(b) The alarm pick-up relays are reset, Fig. 7.5.

Impulse 26. (a) A K-relay is energized by an impulse passing through the sensing circuit shown in Fig. 7.4. The ranges of x and the corresponding K-relays are tabulated in Fig. 7.6.

(b) Alarm pick-up relay Z1 is energized if the exponent of the argument read into register 061 is equal to $+15$, or if the argument x is equal to zero. Alarm relay Z2 is energized if $x \leq 0$, Fig. 7.5.

Line 15; out-code (127).

Impulse 29. (a) Out-code (127) sets up an out-pyramid through which an impulse passes to energize a times-k_1 out-relay, Fig. 7.7.

(b) The transfer register in-relay is energized, Fig. 6.29.

(c) The transfer register is reset, Fig. 6.29.

Impulse 30. (a) The quantity $\overline{x} = k_1 x$ is read through the times-k_1 read-out, and the times-k_1 out-relay, Fig. 3.17, to the transfer register.

Line 16; in-code (062), operation-code 57.

Impulse 31. (a) The transfer register out-relay is energized, Fig. 6.28.

(b) The register 062 in-relay is energized.

(c) Register 062 is reset.

Impulse 32. (a) The quantity $\bar{X}$ is read into the sensing register 062.

(b) Operation-code 57 causes one of the two auxiliary in-relays, XG5 or XG6, to be energized.

Line 17.

Impulse 33. (a) Relays, AC1-AC12, the auxiliary relays of register 062 are energized.

Line 18; operation-code 51.

Impulse 36. (a) One of the sensing pick-up relays, XC1 or XC2, is energized, Fig. 7.8, as a result of the reading of operation-code 51.

Line 19; sign-code 3, out-code (146).

Impulse 37. (a) An impulse through the sensing circuit of Fig. 7.8 selects the approximation $\log_{10} Z$ as stored by two or more of the relays, C1-C55.

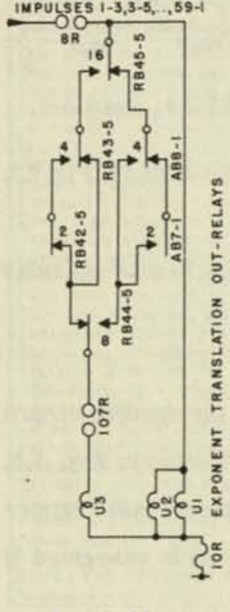

Fig. 7.18 - Logarithm out-relays.

(b) An impulse passing through the out-pyramid as set up by out-code (146) energizes the logarithm out-relay, YL1-YL8.

(c) The augend in-relay, I1-I8, is energized, Fig. 6.29.

Impulse 38. (a) The quantity $-\log_{10} Z$ is read into the augend register, from the $\log_{10} Z$ storage relays through the contacts of the logarithm out-relay. The negative sign is prefixed by sign-code 3 as shown in Fig. 3.5 and discussed on page 55.

(b) The function alarm relay FUL1 is energized, Fig. 7.10, if relay Z2 was energized during impulse 26; that is, if the argument $X \leq 0$.

Line 20; out-code (147), operation-code 51.

Impulse 39. (a) If the function alarm relay was energized by the previous impulse, the main machine alarm is now energized to stop the calculator (cf. pages 143-144).

(b) Out-code (147) together with a contact of the energized K-relay permit an impulse to energize the required k_5-relay, Fig. 7.17.

(c) The addend in-relay, J1-J8, is energized as described in impulse 3(b) of the addition procedure, page 72.

Impulse 40. (a) The quantity k_5 is read into the addend register.

(b) One of the sensing pick-up relays, XC1 or XC2, is energized by an impulse passing through the operation-pyramid as set up by operation-code 51, Fig. 7.8.

Line 21; out-code (130).

Impulse 41. (a) One or more of the Z storage relays, A1-A27, are energized by an impulse passing through the sensing circuit of Fig. 7.8.

(b) The reciprocal out-relays are energized by an impulse passing through the out-pyramid set up by out-code (130), Fig. 7.9.

(c) The transfer register in-relays are energized, Fig. 6.29.

(d) The transfer register is reset, Fig. 6.29.

Impulse 42. (a) The quantity $z = Z \times 10^{-j-1}$ is read into the transfer register.

(b) The function alarm relay is energized if alarm pick-up relay Z1 was energized by impulse 26; that is, if the argument x is equal to zero, or if the exponent of the argument is equal to $+15$. A contact of the function alarm relay will close a circuit permitting the main machine alarm to be energized, Fig. 6.34, during impulse 38 of the next succeeding cycle, stopping the calculator at the end of that cycle (cf. pages 143-144).

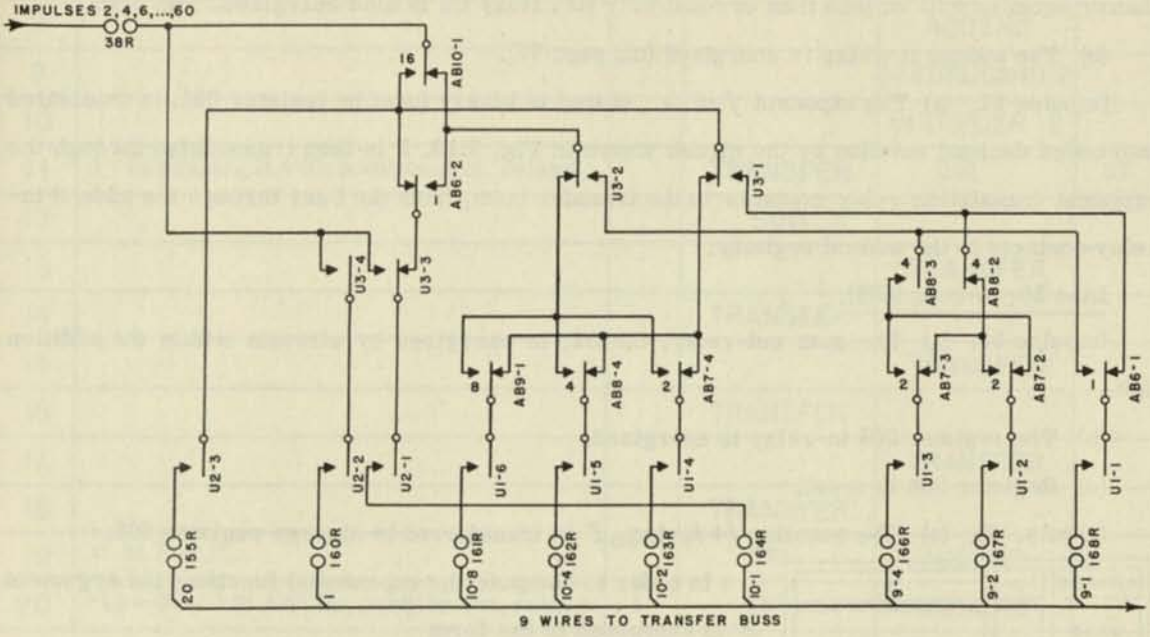

Fig. 7.19 - Exponent translation circuit.

Line 22; in-code (004).

Impulse 43. (a) The transfer register out-relay is energized, Fig. 6.28.

(b) The register 004 in-relay is energized.

(c) Register 004 is reset.

Impulse 44. (a) The quantity z is read from the transfer register to register 004.

Line 24; in-code (002).

Impulse 47. (a) The sum out-relay, O1-O8, is energized as discussed in impulse 11(c) of the description of the addition unit (cf. page 79).

(b) The in-relay of register 002 is energized.

(c) Register 002 is reset.

Impulse 48. (a) The quantity $k_5 - \log_{10} Z$ is transferred from the sum register to register 002.

Line 25; out-code (002).

Impulse 49. (a) The out-relay of register 002 is energized.

(b) The in-relay, I1-I8, of the augend register is energized, Fig. 6.29.

Impulse 50. (a) The quantity $k_5 - \log_{10} Z$ is transferred to the augend register.

Line 26; out-code (145).

Impulse 51. (a) An impulse passes through the out-pyramid as set up by out-code (145) to energize exponent translation relays U1 and U2. If the exponent of the argument is either greater than or equal to $+10$ or less than or equal to -10, relay U3 is also energized, Fig. 7.18.

(b) The addend in-relay is energized (cf. page 72).

Impulse 52. (a) The exponent j of x, stored in binary form in register 061, is translated into coded decimal notation by the circuit shown in Fig. 7.19. It is then transmitted through the exponent translation relay contacts to the transfer buss, from the buss through the addend in-relay contacts to the addend register.

Line 30; in-code (003).

Impulse 59. (a) The sum out-relay, O1-O8, is energized by circuits within the addition unit.

(b) The register 003 in-relay is energized.

(c) Register 003 is reset.

Impulse 60. (a) The quantity $j + k_5 - \log_{10} Z$ is transferred to storage register 003.

EXPONENT	p	q
$x \geq +0$		
$j = 1$	x_8	$10x_{10} + x_9$
$j = 0$	x_9	x_{10}
$j = -1$	x_{10}	0
$j < -1$	0	0
$x \leq -0$		
$j = 1$	$\bar{x}_8$	$-\left(10x_{10} + x_9 + \frac{\bar{x}_8}{10}\right)$
$j = 0$	$\bar{x}_9$	$-\left(x_{10} + \frac{x_9}{10}\right) - \frac{\bar{x}_9}{10}$
$j = -1$	$\bar{x}_{10}$	$-\frac{x_{10}}{10} - \frac{\bar{x}_{10}}{10}$
$j < -1$	0	0

$\bar{x}_j = x_j$ IF $x_j = 0$; $\bar{x}_j = 10 - x_j$ IF $x_j \neq 0$

Fig. 7.20 - Values of p and q.

In order to compute the exponential function, the argument x is expressed in the form

$$x = \pm\left(x_{10} + \frac{x_9}{10} + \frac{x_8}{100} + \cdots\right) \times 10^j,$$

the x_j representing the successive digits of x. Register 060 supplies $(q + 0.1p)$ and $10^{(q+0.1p)}$ where p and q are defined in Fig. 7.20. Then $z = x - (q + 0.1p)$ is used to compute

$$10^z = 1 + c_1 z + c_2 z^2 + c_3 z^3 + c_4 z^4 + c_5 z^5 + c_6 z^6. \quad (4)$$

Finally $10^x = 10^z 10^{(q+0.1p)}$ is computed under code control. The series coefficients c_j are read from constant registers as listed on page 55. The error committed in using this approximation is less than two units in the lowest order machine column.

Figure 7.21 gives the coding required to obtain the

PROBLEM 10^x TAPE ______ SECOND 1

LINE	FORMULA	SIGN	OUT	IN	OPER.
1				AUGEND	
2				ADDEND	
3				MULTIPLICAND 1	
4				MULTIPLIER 1	
5	argument x from S.R.001 to T.R.		001	TRANSFER	
6			SUM		
7				AUGEND	
8				ADDEND	
9				MULTIPLICAND 2	
10				MULTIPLIER 2	
11	x to Sensing R.060; position aux. relays		TRANSFER	060	57
12			SUM		
13				TRANSFER	
14			TRANSFER		
15				TRANSFER	
16			TRANSFER		
17				TRANSFER	
18			TRANSFER		
19	x to Aug.R.		060	AUGEND	
20	$-(q+0.1p)$ to Add.R.; position aux. relays	1	157	ADDEND	
21				TRANSFER	
22			TRANSFER		
23			PRODUCT 1		
24	$z=x-(q+0.1p)$ to S.R.002		SUM	002	
25				AUGEND	
26				ADDEND	
27	$10^{(q+0.1p)}$ to T.R.		160	TRANSFER	
28	$10^{(q+0.1p)}$ to S.R.003		TRANSFER	003	
29			PRODUCT 2		
30			SUM		

Fig. 7.21 - Computation of exponential.

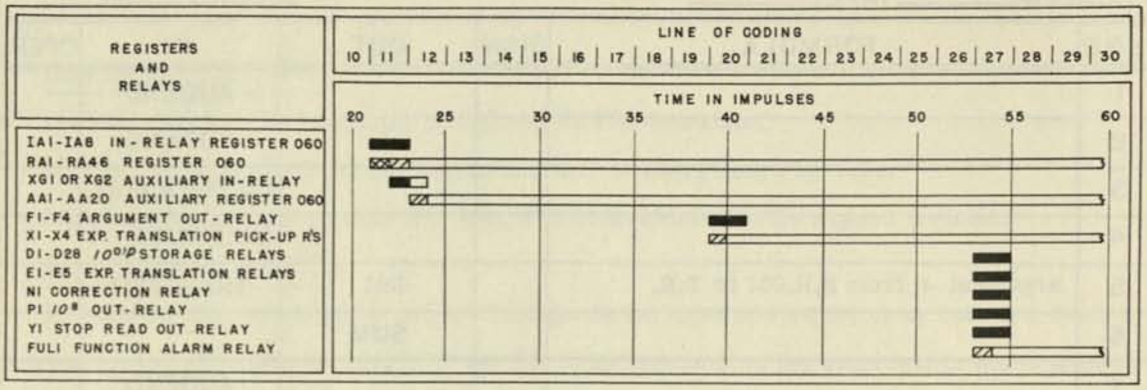

Fig. 7.22 - Timing of exponential computation.

quantities z and $10^{(q+0.1p)}$ in order to compute the exponential function. In the following discussion of these operations only those impulses will be considered which are necessary to the computation. The operations related to the transfer, augend, and addend registers will be omitted since they have been adequately described in the discussions of the reciprocal, reciprocal square root, and logarithm computations. The timing of the relays related to register 060 is given in Fig. 7.22.

Line 11; in-code (060), operation-code 57.

Impulse 21. (a) The in-relay, IA1-IA8, of register 060 is energized.

(b) Register 060 is reset.

Impulse 22. (a) The quantity x is read into register 060.

(b) One of the auxiliary in-relays, XG1 or XG2, is energized by an impulse passing through an operation-pyramid set up by operation-code 57.

Line 12.

Impulse 23. (a) The auxiliary register relays, AA1-AA20, are energized by an impulse passing through a circuit similar to that shown in Fig. 3.14.

Line 19; out-code (060).

Impulse 37. (a) Register 060 out-relay, OA1-OA8, is energized.

Impulse 38. (a) The quantity x is transferred to the

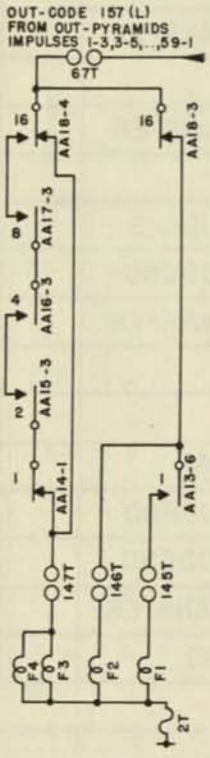

Fig. 7.23 - Argument out-relay.

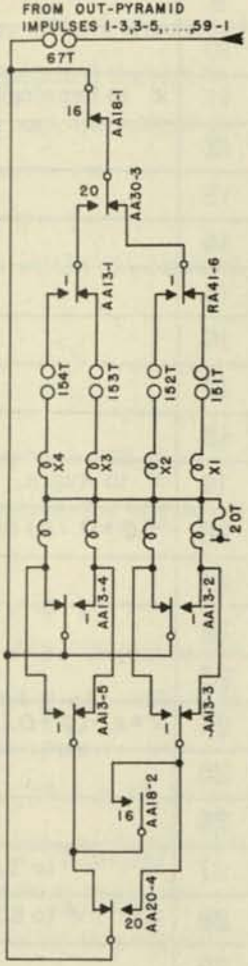

Fig. 7.24 - Exponent translation pick-up relays.

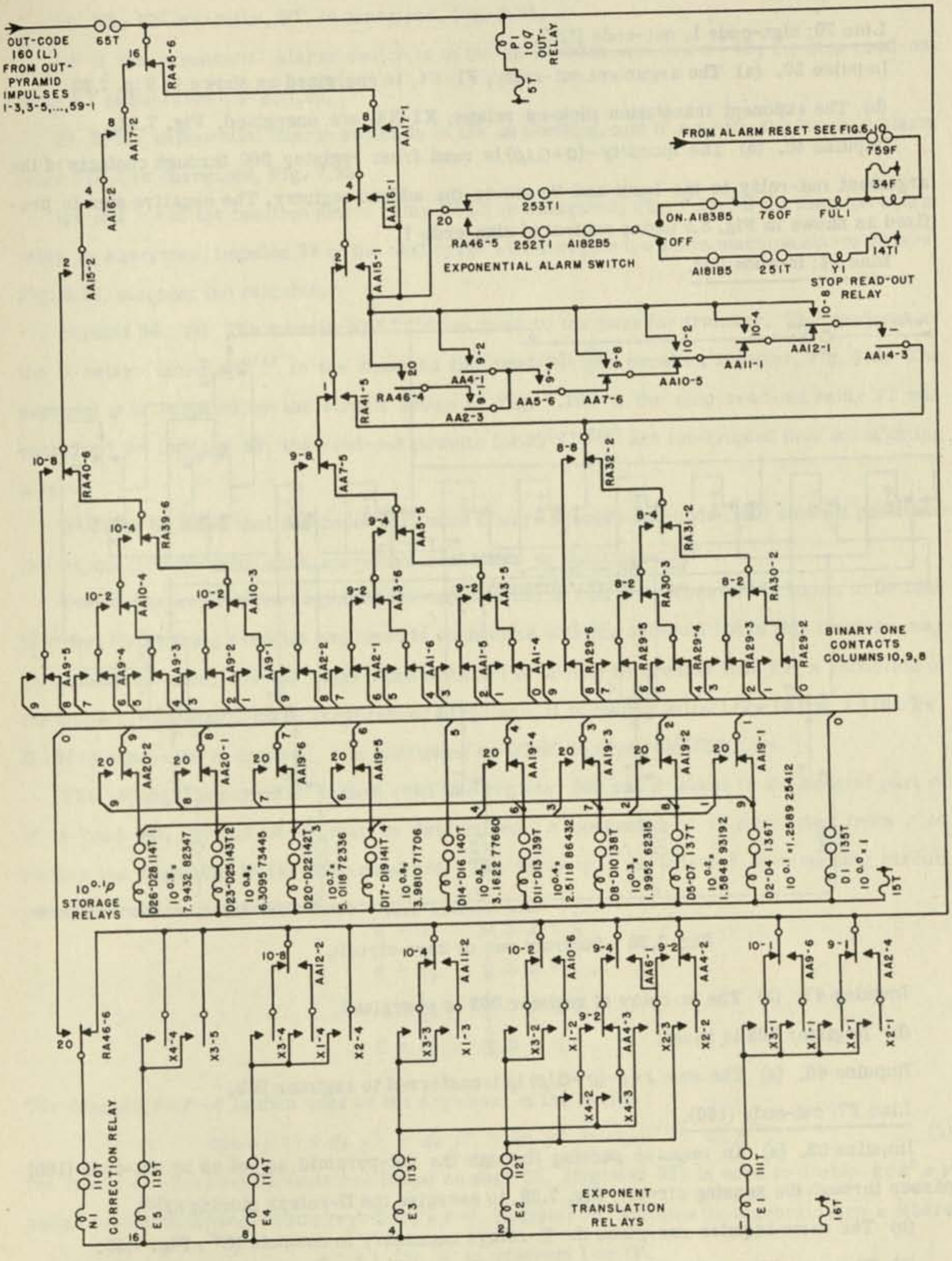

Fig. 7.25 - Exponential sensing circuit.

augend register.

Line 20; sign-code 1, out-code (157).

Impulse 39. (a) The argument out-relay, F1-F4, is energized as shown in Fig. 7.23.

(b) The exponent translation pick-up relays, X1-X4, are energized, Fig. 7.24.

Impulse 40. (a) The quantity $-(q+0.1p)$ is read from register 060 through contacts of the argument out-relay to the buss and thence to the addend register. The negative sign is prefixed as shown in Fig. 3.5 under control of sign-code 1.

Line 24; in-code 002.

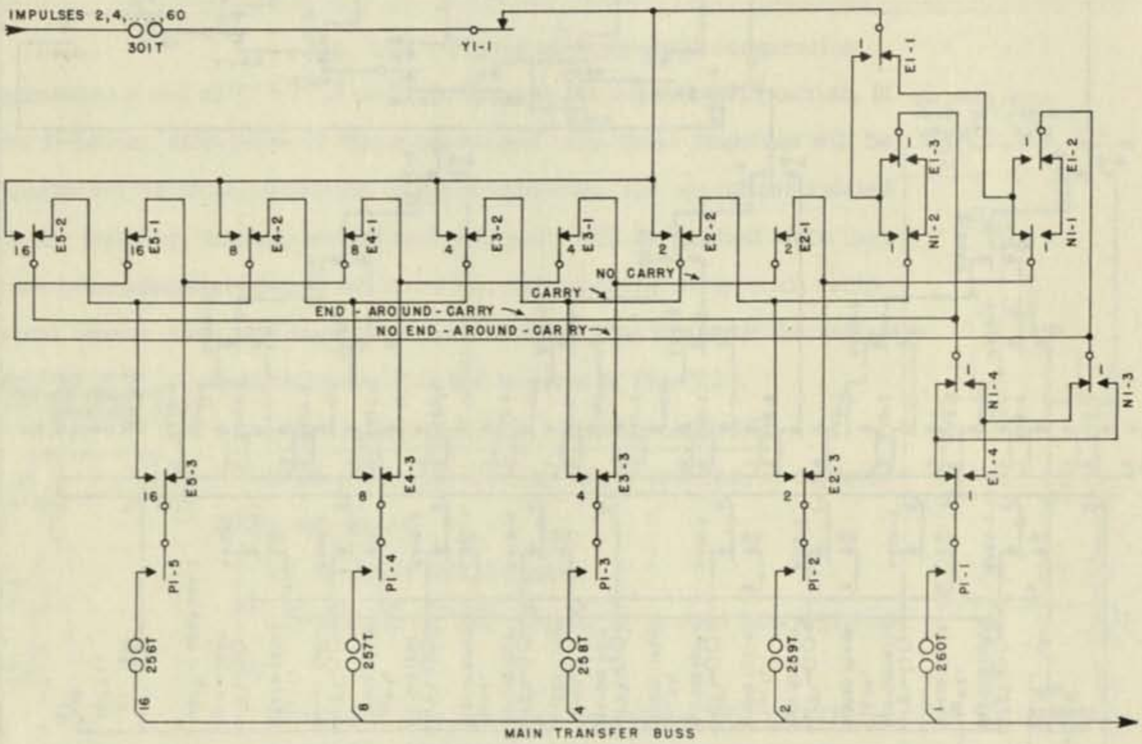

Fig. 7.26 - Subtract one or zero circuit.

Impulse 47. (a) The in-relay of register 002 is energized.

(b) Register 002 is reset.

Impulse 48. (a) The sum $z=x-(q+0.1p)$ is transferred to register 002.

Line 27; out-code (160).

Impulse 53. (a) An impulse passing through the out-pyramid as set up by out-code (160) passes through the sensing circuit, Fig. 7.25, to energize the D-relays storing $10^{0.1p}$.

(b) The same impulse energizes the E-relays necessary to compute 10^{q}, Fig. 7.25.

(c) The correction relay N1 is energized if (1) $x \geq +0$, or (2) $p=0$ and $x \leq -0$, Fig. 7.25.

(d) The 10^q out-relay, P1, is energized, Fig. 7.25.

(e) If the exponential alarm switch is in the off position, and if $x \leq -15$, the stop read-out relay Y1 is energized, Fig. 7.25.

(f) If the exponential alarm switch is in the on position, and if $x \leq -15$, the function alarm relay FUL1 is energized, Fig. 7.25.

(g) If $x > +15$ the function alarm relay FUL1 is energized, Fig. 7.25. If the function alarm relay is energized, impulse 38 of the next cycle will energize the main machine alarm relays, Fig. 6.34, stopping the calculator.

Impulse 54. (a) The quantity $10^{(q+0.1p)}$ is read to the buss for transfer. The read-out of the D-relays storing $10^{0.1p}$ is the same as the read-out of a constant register, Fig. 3.6. The exponent q is supplied by the circuit shown in Fig. 7.26. If the stop read-out relay Y1 was energized by impulse 53, the read-out circuits for $10^{(q+0.1p)}$ are interrupted thus substituting a zero.

It should be noted that out-code (157) must always precede out-code (160) since it positions the exponent translation pick-up relays necessary to determine 10^q.

Two cases arise when beginning the computation of $\cos\theta$. When $|\theta|$ is known to be less than 2π, the sensing circuits employed in connection with the computation of this function may be entered at once. On the other hand when $|\theta|$ is or may be greater than 2π, a reduction of the angle is necessary. If $|\theta|$ is expressed in radians, it is multiplied by $1/2\pi$ to give $x = |\theta|/2\pi$. If $|\theta|$ is expressed in degrees, it is multiplied by $1/360$ to give $x = |\theta|/360$. ← ?

The reduced argument x is then read into register 060 and x' equal to the integral part of x is read out. Thus $z = x - x'$ may be determined. A correction c is subtracted from z to reduce the argument to the first quadrant. The value of c is selected by a sensing circuit connected with register 060 where

$$\begin{aligned} c &= 0, & 0 &\leq z < \tfrac{1}{4}, \\ c &= \tfrac{1}{2}, & \tfrac{1}{4} &\leq z < \tfrac{1}{2}, \\ c &= \tfrac{1}{2}, & \tfrac{1}{2} &\leq z < \tfrac{3}{4}, \\ c &= 1, & \tfrac{3}{4} &\leq z < 1. \end{aligned}$$

The quantity $y = z - c$ is then used as the argument of the series

$$\cos\pi y = 1 + d_2 y^2 + d_4 y^4 + d_6 y^6 + d_8 y^8 + d_{10} y^{10}, \tag{5}$$

the values of whose coefficients are listed on page 55. Register 061 is used to double $\cos^2\pi y$ and a 1 is subtracted to give $\cos 2\pi y = 2\cos^2\pi y - 1$. Register 060 supplies the algebraic sign ϵ where

$$\epsilon = +1 \text{ for } x \text{ in quadrant I or IV,}$$

$$\epsilon = -1 \text{ for } x \text{ in quadrant II or III.}$$

PROBLEM $\cos x$ TAPE ______ SECOND 1

LINE	FORMULA	SIGN	OUT	IN	OPER.
1	argument x to Aug.R.		001	AUGEND	
2				ADDEND	
3				MULTIPLICAND 1	
4				MULTIPLIER 1	
5				TRANSFER	
6	x to Sensing R.060		SUM	060	
7	x to Aug.R.		060	AUGEND	
8	$-x'$ integral part of x to Add.R.	3	167	ADDEND	
9				MULTIPLICAND 2	
10				MULTIPLIER 2	
11			TRANSFER		
12	$z = x - x'$ to Sensing R.060		SUM	060	
13				TRANSFER	
14			TRANSFER		
15				TRANSFER	
16			TRANSFER		
17				TRANSFER	
18			TRANSFER		
19	z to Aug. R.		060	AUGEND	55
20	correction $-c$ to Add.R.		170	ADDEND	
21				TRANSFER	
22			TRANSFER		
23			PRODUCT 1		
24	$y = z - c$ to S.R.002		SUM	002	
25				AUGEND	
26				ADDEND	55
27	ϵ (sign of $\cos x$) to T.R.		126	TRANSFER	
28	ϵ to Sign-Invert R.		TRANSFER	074	
29			PRODUCT 2		
30			SUM		

Fig. 7.27 - Computation of cosine.

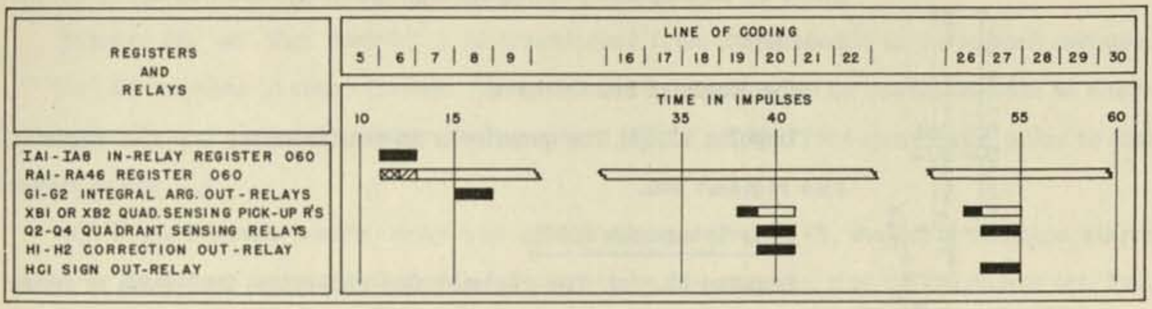

Fig. 7.28 - Timing of cosine computation.

This sign is transferred to the sign-invert register and prefixed to the final read-out

$$\cos \theta = \epsilon \cos 2\pi y.$$

The error in the cosine as delivered by the functional unit is not more than one unit in the first machine column.

The argument $|\theta|$ must be multiplied by $1/2\pi$ out-code (166) or by $1/360$ out-code (124) in order to reduce it to revolutions before entering the cosine sensing register 060. In Fig. 7.27, it is assumed that the reduced argument x lies in register 001. The coding then successively transfers x and z to the sensing register and reads out; (1) x', the integral part of x, out-code (167); (2) $-c$, the correction reducing z to the first quadrant, out-code (170) immediately preceded by operation-code 55 (56); and (3) ϵ, the algebraic sign of $\cos x$, out-code (126) immediately preceded by operation-code 55 (56). The remaining 6.5 cycles necessary to complete the computation of the cosine require only coding for the addition and multiplication units and for register 061 used as a doubling register (cf. pages 62-66).

The function alarm relay is energized if (1) $x \leq -0$ or if (2) the exponent of x is greater than unity, thus insuring that a properly reduced argument is supplied to the sensing circuits. A contact of the function alarm relay permits the main machine alarm to be energized, thus stopping the calculator.

In the impulse by impulse description which follows only those operations related to register 060 will be described. Figure 7.28 shows the timing of the relays associated with register 060.

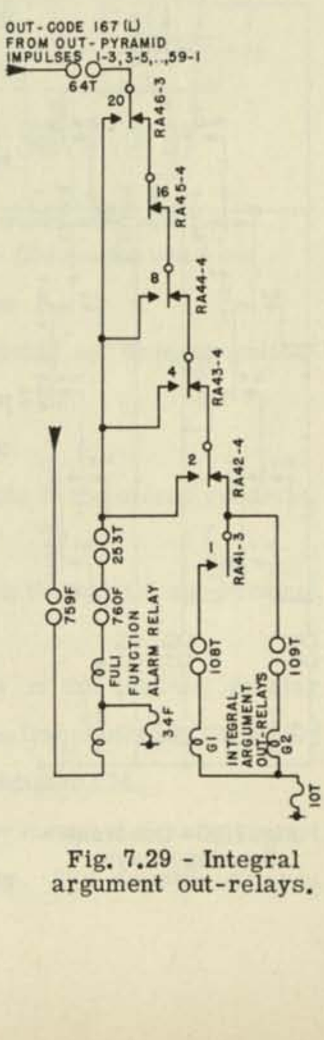

Fig. 7.29 - Integral argument out-relays.

Line 6; in-code (060).

Impulse 11. (a) The register 060 in-relay, IA1-IA8, is energized by an impulse passing through the in-pyramid as set up by in-code (060).

(b) Register 060 is reset.

Impulse 12. (a) The quantity X is read from the transfer register into register 060.

Line 7; out-code (060).

Impulse 13. (a) The register 060 out-relay, OA1-OA8, is energized.

(b) The augend register in-relay is energized.

Impulse 14. (a) The quantity X is read into the augend register from register 060.

Line 8; sign-code 3, out-code (167).

Impulse 15. (a) If the exponent of X is unity, the integral argument out-relay G1 is energized. If the exponent of X is 0 or 1, the integral argument out-relay G2 is energized. These relays are energized by an impulse originating from the out-pyramid as set up by out-code (167), Fig. 7.29.

(b) If the exponent of X is ≥ 2, or if $X \leq -0$, the function alarm relay FUL1 is energized, Fig. 7.29.

(c) The addend register in-relay is energized.

Impulse 16. (a) Sign-code 3 prefixes a negative sign to the read-out of X' as shown in Fig. 3.5.

(b) The quantity X', the integral part of X, is read from contacts of the 060 register relays through contacts of the integral argument out-relays, G1-G2, to the transfer buss and thence to the addend register.

Line 12; in-code (060).

Impulse 23. (a) The sum out-relay is energized.

(b) The register 060 in-relay, IA1-IA8, is energized.

(c) Register 060 is reset.

Impulse 24. (a) The quantity $Z = X - X'$ is transferred from the sum register to the sensing register 060.

Line 19; out-code (060), operation-code 55.

Impulse 37. (a) The out-relay, OA1-OA8, of register 060 is energized.

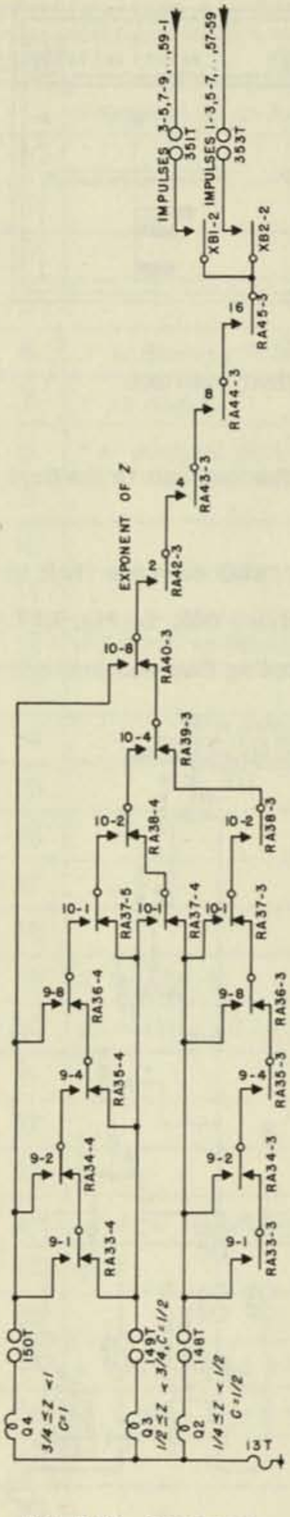

Fig. 7.30 - Quadrant Sensing relays.

(b) The in-relay of the augend register is energized.

Impulse 38. (a) The quantity z is transferred from register 060 to the augend register.

(b) An impulse passing through the operation-pyramid set up by operation-code 55 energizes one of the quadrant sensing pick-up relays, XB1 or XB2. This circuit is similar to that shown in Fig. 7.3.

(c) If the function alarm relay was energized by impulse 15, the main machine alarm relay is energized initiating the series of operations necessary to stop the calculator (cf. Fig. 6.34 and pages 143-144).

Line 20; out-code (170).

Impulse 39. (a) Since the exponent of z is ≤ -1, one of the quadrant sensing relays, Q2-Q4, is energized by an impulse passing through a contact of the quadrant sensing pick-up relays and the sensing circuit shown in Fig. 7.30, if $z \geq 1/4$. If $z < 1/4$, no correction is required and no quadrant sensing relay is energized.

(b) Correction out-relays, H1 and H2, are energized by an impulse passing through the out-pyramid set up by out-code (170).

(c) The addend in-relay is energized.

Impulse 40. (a) The correction $-c$ is read from contacts of the quadrant sensing relay through contacts of the correction out-relays to the transfer buss, Fig. 7.31, and thence to the addend register.

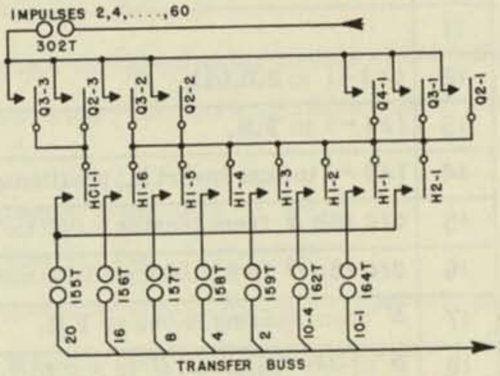

Fig. 7.31 - Correction read-out.

Line 26; operation-code 55.

Impulse 52. (a) An impulse passing through the operation-pyramid set up by operation-code 55 energizes one of the quadrant sensing pick-up relays, XB1 or XB2.

Line 27; out-code (126).

Impulse 53. (a) Quadrant sensing relay Q2 is energized if x falls in the second quadrant, Q3 if x falls in the third quadrant, Fig. 7.30.

(b) Correction out-relay HC1 is energized by an impulse passing through the out-pyramid set up by out-code (126).

Impulse 54. (a) The sign of $\cos x$ is read through contacts of the quadrant sensing relays, Q2 or Q3, and contact HC1-1 of the correction out-relay to the transfer buss, Fig. 7.31, to the transfer register. The sign is then stored in the sign-invert register 074.

In the computation of $\arctan x$ two cases are distinguished by means of the sign-invert register and the code-interchange register, $0 \leq |x| < 1$ and $1 \leq |x| < \infty$. The quantity $|x| - 1$ is

PROBLEM arc tan x TAPE ____ SECOND 1

LINE	FORMULA	SIGN	OUT	IN	OPER.
1	$\vert x\vert$ to Aug.R. for transfer	2	001	AUGEND	
2				ADDEND	
3				MULTIPLICAND I	
4				MULTIPLIER I	
5				TRANSFER	
6	$\vert x\vert$ to Sensing R.060; position aux. relays		SUM	060	57
7	$\vert x\vert$ to Aug.R.	2	001	AUGEND	
8	-1 to Add.R.	3	150	ADDEND	
9	$-\vert x\vert$ to MC.R.; position aux. relays	3	001	MULTIPLICAND 2	53
10	B from sensing R.060 to MP.R.		175	MULTIPLIER 2	
11			TRANSFER		
12	$\vert x\vert-1$ to S.R.011		SUM	011	
13	$\vert x\vert-1$ to T.R.		011	TRANSFER	
14	$\vert x\vert-1$ to Sign-Invert R.; position aux. rels.		TRANSFER	074	53
15	arc tan B from Sensing R.060 to T.R.		174	TRANSFER	
16	arc tan B to S.R.003; position aux. relays		TRANSFER	003	53
17	B from Sensing R.060 to T.R.		175	TRANSFER	
18	$B^*=\left[(\vert x\vert-1)/\vert\vert x\vert-1\vert\right]B$ to S.R.010	4	TRANSFER	010	
19	$\vert x\vert$ to Aug.R.	2	001	AUGEND	
20	B^* to Add.R.		010	ADDEND	
21	$\vert x\vert-1$ to T.R.		011	TRANSFER	
22	$\vert x\vert-1$ to Code-Interchange R.		TRANSFER	076	
23			PRODUCT I		
24	$\vert x\vert+B^*$ to S.R.004		SUM	004	
25				AUGEND	
26				ADDEND	
27				TRANSFER	
28			TRANSFER		
29	$-\vert x\vert B^*$ to S.R.002	4	PRODUCT 2	002	
30			SUM		

Fig. 7.32 - Computation of arc tan x.

transferred to the sign-invert register and $|x|$ to sensing register 060. The latter register controls certain constant registers from which a sensing circuit selects the quantities B and $\arctan B$ for the various ranges of $|x|$, Fig. 7.34. If B^* indicates the quantity B after transfer under control of the sign-invert register, the two quantities $|x|+B^*$ and $1-|x|B^*$ may be computed and stored in neighboring registers, the first in an even register and the second in an odd register. If $|x|-1$ is stored in the code-interchange register, and the numerator and denominator of a division selected under control of the code-interchange register,

$$w = \frac{|x|-B}{1+|x|B} \qquad \text{for} \qquad |x|-1<0,$$

or

$$w = \frac{1-|x|B}{|x|+B} \qquad \text{for} \qquad |x|-1\geq 0$$

will be determined. Using the coefficients f_i as stored in constant registers (cf. page 55), the series

$$\arctan w = f_1 w + f_3 w^3 + f_5 w^5$$

is evaluated. The quantity $\pi/2$ is read into the addition unit as augend under control of the code-interchange register, and the quantity $\arctan y = -\arctan B - \arctan w$ as addend under control of the sign-invert register. Thus

$$\arctan |x| = \arctan B + \arctan w \quad \text{for} \quad |x|-1<0,$$
$$\arctan |x| = \pi/2 - \arctan B - \arctan w \quad \text{for} \quad |x|-1\geq 0.$$

Since $\arctan x = \frac{x}{|x|} \arctan |x|$, the sign-invert register is used to prefix the algebraic sign of x. The error in the function computed by this procedure is not more than one unit in the first machine column.

The sensing register 060 is used only twice; that is, to obtain the approximations B and $\arctan B$. Both of these steps are shown in the first cycle of $\arctan x$ coding, Fig. 7.32. Out-code (175), immediately preceded by operation-code 53 (54), delivers B to the transfer buss, lines 9 and 10. Out-code (174) also immediately preceded by operation-code 53 (54) supplies $\arctan B$, lines 14 and 15. The remaining coding of this cycle (1) computes the control quantity $|x|-1$ and stores it in the sign-invert and code-interchange registers, lines 6, 7, 8, 12, 13, 14, 21, and 22; (2) computes $|x|+B^*$, lines 16, 17, 18, 19, 20, and 24 and stores it in an even register; (3) starts the computation of $1-|x|B^*$, lines 9, 10, and 29, which will be stored in an odd register, 005, during the second cycle. In order to determine w, it is necessary to compute the reciprocal of the divisor. The quantity whose reciprocal is to be obtained is read out by the coding, out-code (004), operation-code 76. The series is evaluated by means of the addition and multiplication units. The quantity $\pi/2$ stands in constant register 176, a read-out under control of the code-interchange register (out-code (176), operation-code 76) yields $\pi/2$

or 0 since out-code (177) is not used (cf. pages 58-59).

Figure 7.33 illustrates the timing of the registers and relays associated with sensing register 060 and employed in the computation of arc tan x. Only lines of coding 6, 7, 9, 10, 14, and 15 of Fig. 7.32 which are directly related to register 060 will be included in the description of the sensing circuits.

Line 6; in-code (060), operation-code 57.

Impulse 11. (a) Register 060 in-relay, IA1-IA8, is energized.

(b) Register 060 is reset.

Impulse 12. (a) The quantity $|x|$ is transferred to register 060.

(b) One of the auxiliary in-relays, XG1 or XG2, is energized by an impulse passing through the operation-pyramid set up by operation-code 57. This circuit is similar to that shown in Fig. 3.13.

Line 7.

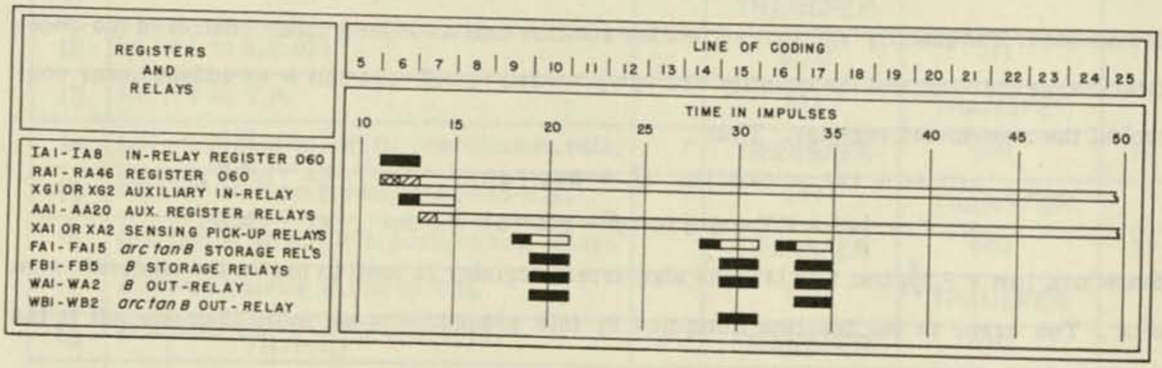

Fig. 7.33 - Timing of computation of arc tan x.

Impulse 13. (a) The auxiliary register 060 relays, AA1-AA20, are energized by an impulse passing through contacts of the auxiliary in-relay and the register relays.

Line 9; operation-code 53.

Impulse 18. (a) One of the sensing pick-up relays, XA1 or XA2, is energized by an impulse passing through an operation-pyramid set up by operation-code 53.

Line 10; out-code (175).

Impulse 19. (a) The B and arc tan B storage relays corresponding to the given $|x|$ are energized by means of the sensing circuit shown in Fig. 7.34.

(b) The B out-relays, WA1-WA2, are energized by an impulse passing through the out-pyramid set up by out-code (175).

Impulse 20. (a) The selected approximation B is read to the transfer buss by an impulse passing through contacts of the B storage relays and the B out-relays.

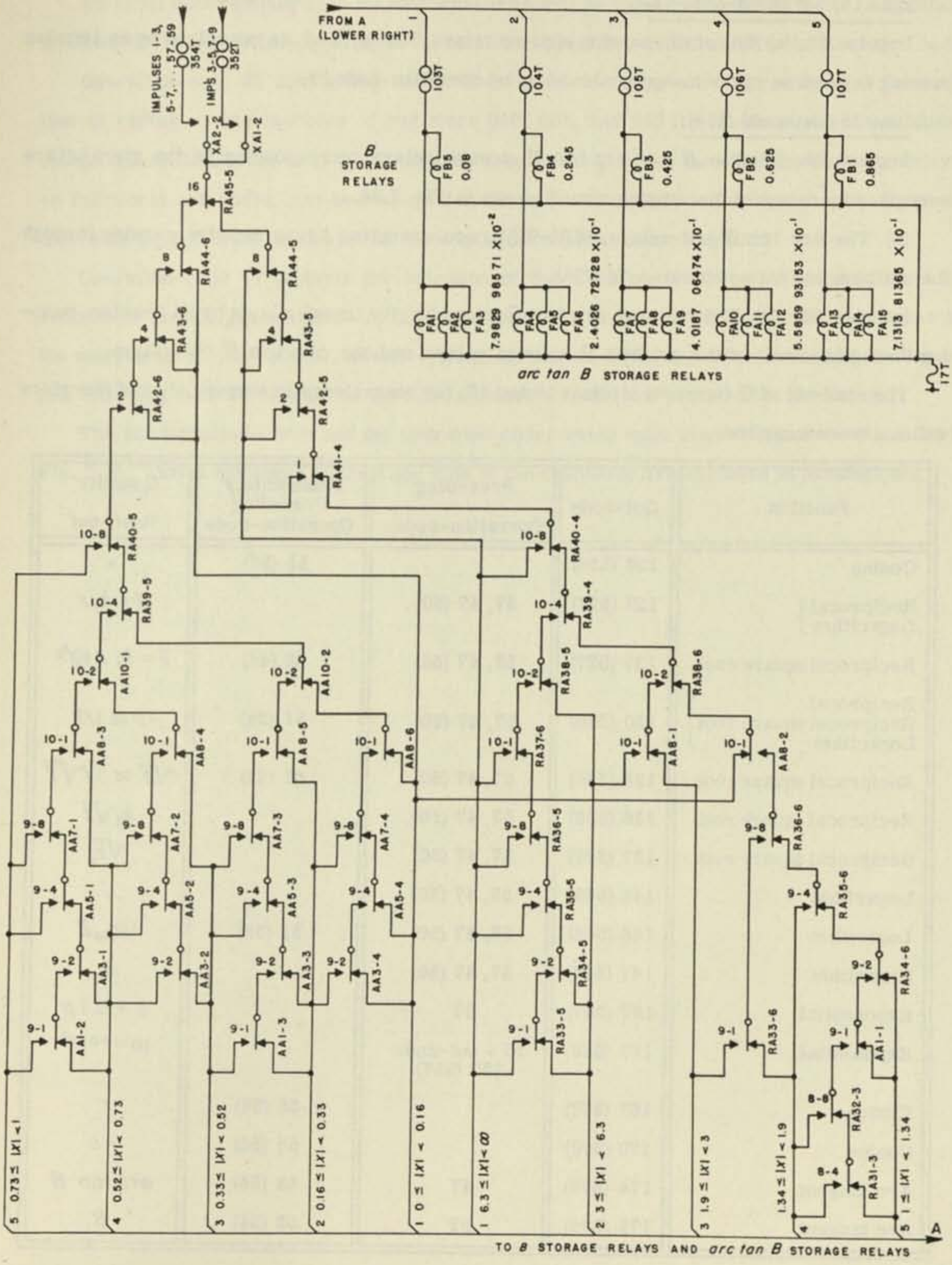

Fig. 7.34.- *B* and arc tan *B* sensing circuit.

Line 14; operation-code 53.

Impulse 28. (a) One of the sensing pick-up relays, XA1 or XA2, is energized by an impulse passing through an operation-pyramid set up by operation-code 53.

Line 15; out-code (174).

Impulse 29. (a) The B and arc tan B storage relays corresponding to the given $|x|$ are energized by means of the sensing circuit shown in Fig. 7.34.

(b) The arc tan B out-relays, WB1-WB2, are energized by an impulse passing through the out-pyramid set up by out-code (174).

Impulse 30. (a) The quantity arc tan B is read to the transfer buss by an impulse passing through contacts of the arc tan B storage relays and the arc tan B out-relays.

The read-out of B is repeated, lines 16 and 17, for convenience in coding only and therefore will not be redescribed.

Function	Out-code	Preceding Operation-codes	Immediately Preceding Operation-code	Quantity Read-out
Cosine	126 (526)		55 (56)	ϵ
Reciprocal Logarithm	127 (527)	57, 47 (50)		$\bar{x} = k_1 x$
Reciprocal square root	127 (527)	57, 47 (50)	45 (46)	$\bar{x} = k_1 x 10^{k_2}$
Reciprocal Reciprocal square root Logarithm	130 (530)	57, 47 (50)	51 (52)	$z \approx 1/\bar{x}$
Reciprocal square root	135 (535)	57, 47 (50)	51 (52)	$\sqrt{z} \approx 1/\sqrt{\bar{x}}$
Reciprocal square root	136 (536)	57, 47 (50)		$k_3\sqrt{z}$
Reciprocal square root	137 (537)	57, 47 (50)		$\sqrt{k_4}$
Logarithm	145 (545)	57, 47 (50)		j
Logarithm	146 (546)	57, 47 (50)	51 (52)	$\log_{10} Z$
Logarithm	147 (547)	57, 47 (50)		k_5
Exponential	157 (557)	57		$q + 0.1p$
Exponential	160 (560)	57 + out-code 157 (557)		$10^{(q+0.1p)}$
Cosine	167 (567)		55 (56)	x'
Cosine	170 (570)		55 (56)	$-c$
Arc tangent	174 (574)	57	53 (54)	arc tan B
Arc tangent	175 (575)	57	53 (54)	B

Fig. 7.35 - Functional out-codes.

All of the codes employed in the functional units will be found in the list of codes in Appendix I. However, the conditions applying to the functional operation-codes will also be discussed here.

Operation-code 57 controlling the auxiliary register relays must be entered on the same line of coding as the in-codes of registers 060, 061, and 062 for all functional computations except that of the cosine. Because of the time required to position the auxiliary register relays, no functional out-codes may be employed in the line immediately following the entry of operation-code 57, but must be delayed at least until the second succeeding line.

Operation-code 47 controls the selection of the K-relays used in the computation of the reciprocal, the reciprocal square root, and the logarithm. It may be entered on the line following the entry of operation-code 57. However, no functional out-code may be entered until the second line following code 47 because of the time required to reset and position the K-relays.

The functional out-codes and the operation-codes which must precede them are tabulated in Fig. 7.35. Codes employed on the right side of the calculator are enclosed in parentheses.

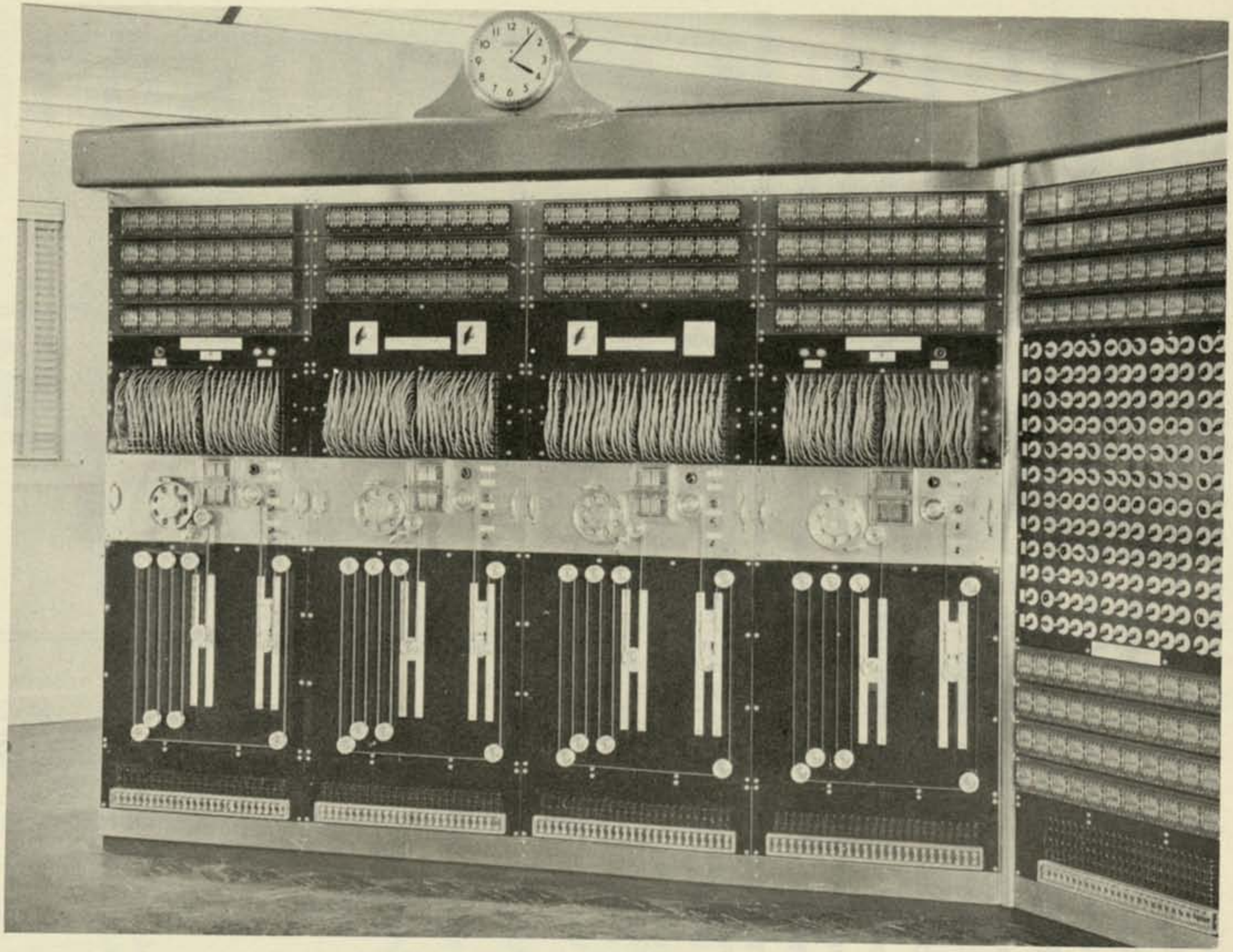

Plate XXVI Left Wing of Calculator: interpolator mechanisms

CHAPTER VIII

INTERPOLATORS

The principle function of the interpolator mechanisms is to select, for a given argument, four or eight successive tabular values of a mathematical function which is supplied to the mechanisms in the form of perforated paper tapes. These functional values are delivered to the interpolation storage registers via a functional buss provided for this purpose. From these storage registers, the tabular values may be read out for use in any desired interpolation formula. The interpolation unit consists of four parts, Fig. 8.1:

(1) the argument registers, 037 and 437, which store the given argument (after it has been subjected to a linear transformation) and control the positioning of the functional tapes by the interpolator mechanisms;

(2) functional tapes (cf. Fig. 1.3) each containing 207 tabular values corresponding to equidistant values of the independent variable, and one blank number space;

(3) four interpolator mechanisms, Plates XXVI and XXVII, which position the functional tapes and read the four or eight required tabular values into the interpolation registers;

(4) the eight interpolation registers on each side of the machine which receive the tabular values.

A functional tape may be positioned for any one of 200 values of the transformed argument. However, in order that eight successive tabular values may be supplied by a single mechanism for any value of the transformed independent variable within its range, the tape must include 207 tabular values of the function; that is, three functional values below that corresponding to the smallest argument to which the tape may be positioned, and four functional values above that corresponding to the largest argument. Since the interpolator mechanisms require that all tapes be of a standard length equivalent to 208 tabular values, one blank or zero value is included. The tapes are endless and may be prepared manually on the tape preparation table or may be prepared by the calculator itself using the tape-punch units. In the latter case the tape must be duplicated on the tape reproduction table since the tape-punch uses thin paper tape while the interpolator mechanisms require that the heavy gray paper tape be used.

Each interpolator mechanism may scan and position one functional tape. The mechanisms may be operated in one of two ways as indicated by the position of the one-or-two-interpolation switch:

(1) one interpolation, all four mechanisms (800 tabular values) under control of argument register 037;

(2) two interpolations, mechanisms No. 1 and No. 2 (400 tabular values) under control of argument register 037, mechanisms No. 3 and No. 4 (400 tabular values) under control of argument register 437.
Either method of operation may be used when the calculator is running on either one or two problems.

In order to interpolate for $y = f(x)$, the independent variable x is first subjected to a linear transformation $\bar{x} = ax + b$. The ranges of the argument $\bar{x}$, the mechanisms corresponding to

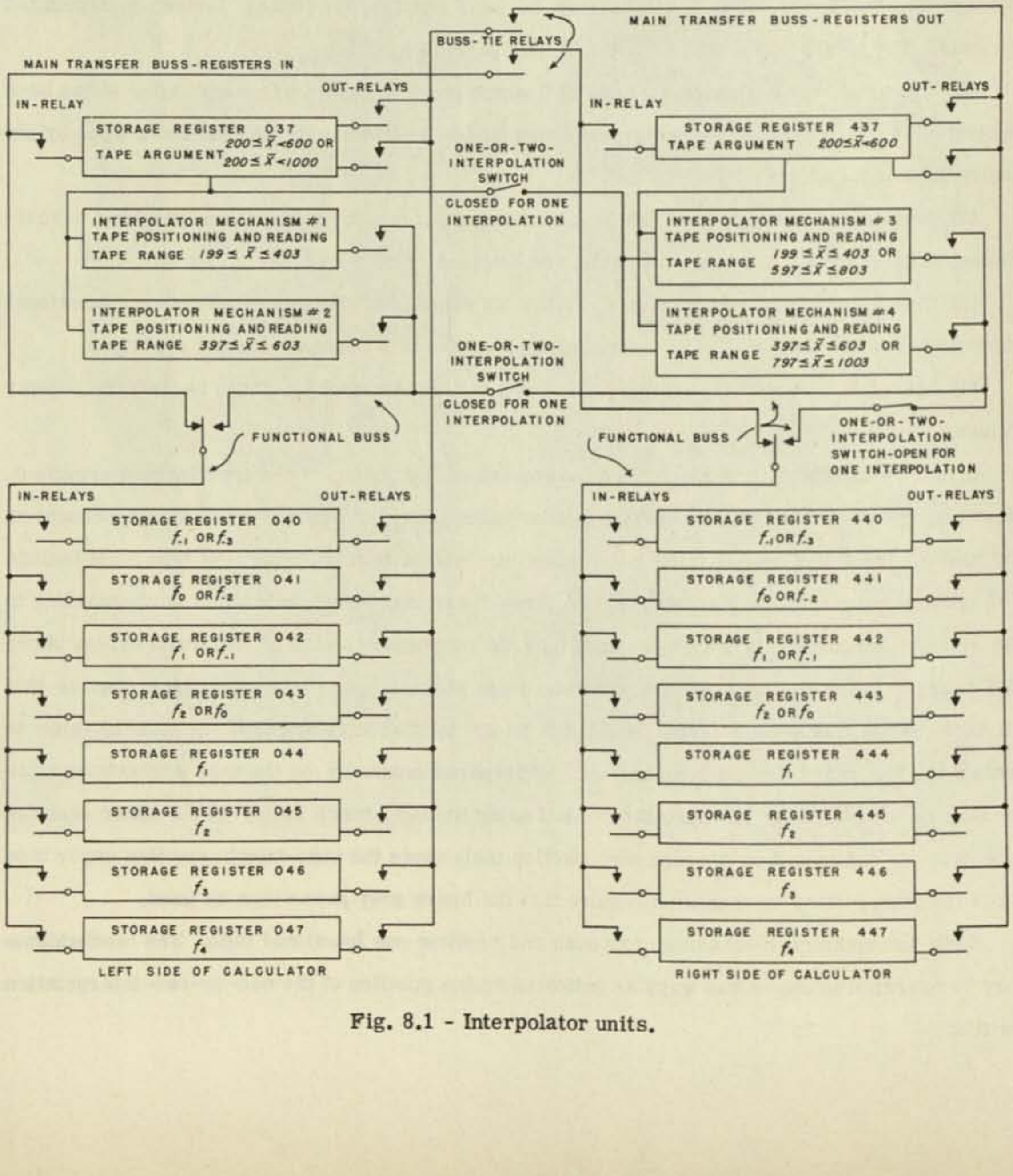

Fig. 8.1 - Interpolator units.

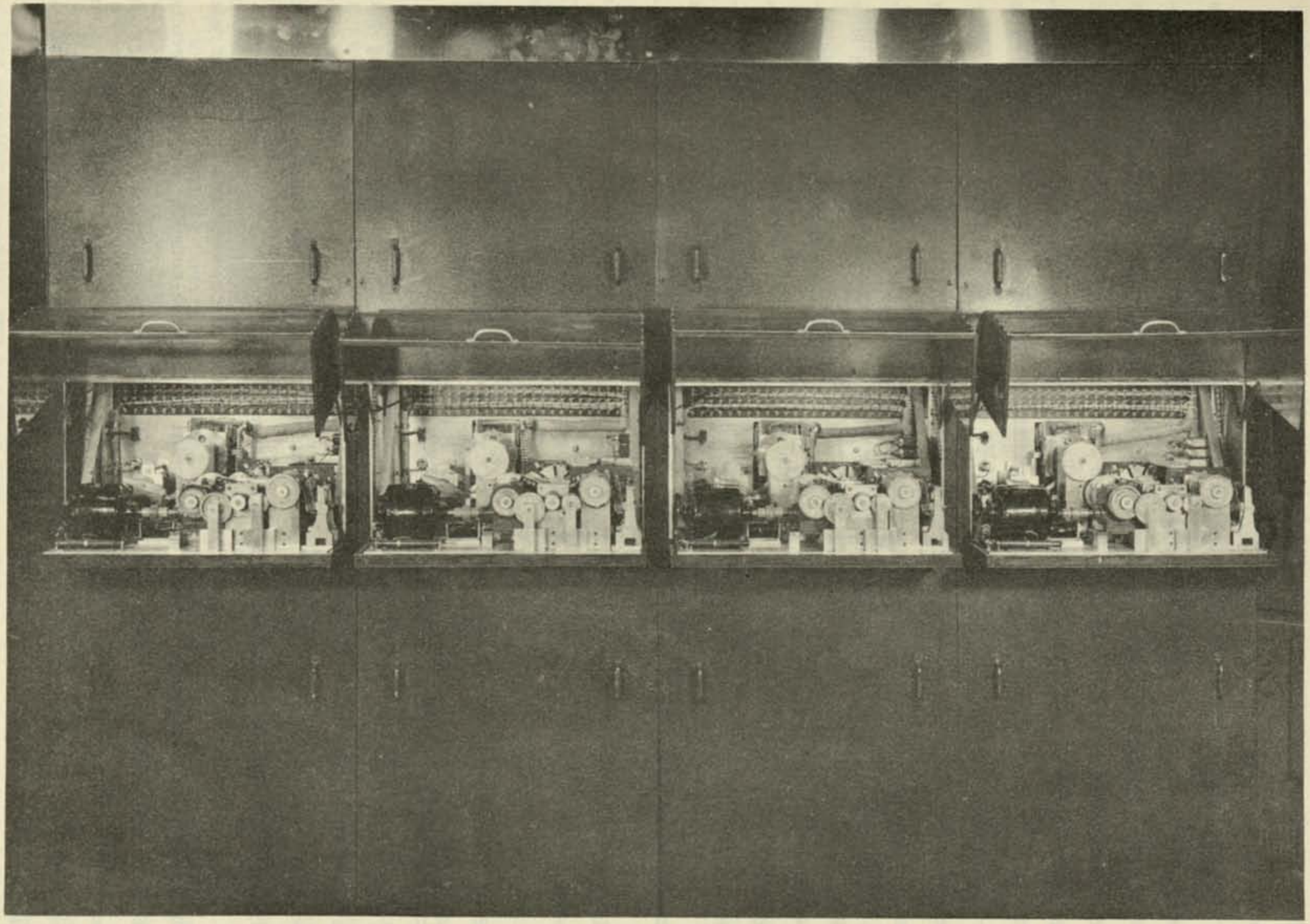

Plate XXVII Interpolator Mechanisms: rear view these ranges, and the tabular entries $f(x)$ required in the functional tapes are shown in the tabulation, Fig. 8.2.

A toggle switch on each pair of mechanisms determines whether four or eight tabular values shall be read from the functional tape, thus providing for third or seventh order interpolation. The registers to which the tabular entries are delivered by the interpolator mechanisms are shown in Fig. 8.1, where f_n indicates $f(x_n)$ and $\bar{x}+n = ax_n + b$. These values are transmitted over the functional buss which is temporarily connected to the normal in-relays of the registers. Therefore these transfers in no way interfere with other operations being performed by the calculator. When the required functional values have been delivered, all interpolator controls are dropped out, and the quantities may be withdrawn as from normal storage registers for use in the selected interpolational procedure.

Range of $\bar{x}$ in argument register	Interpolator Mechanism	Tabular entries in tape, $f(x)$
One interpolation		
Register 037		$\bar{x} = ax + b$
$200 \le \bar{x} < 400$	No. 1	$197 \le \bar{x} < 403$
$400 \le \bar{x} < 600$	No. 2	$397 \le \bar{x} < 603$
$600 \le \bar{x} < 800$	No. 3	$597 \le \bar{x} < 803$
$800 \le \bar{x} < 1000$	No. 4	$797 \le \bar{x} < 1003$
Two interpolations		
Register 037		$\bar{x} = ax + b$
$200 \le \bar{x} < 400$	No. 1	$197 \le \bar{x} < 403$
$400 \le \bar{x} < 600$	No. 2	$397 \le \bar{x} < 603$
Register 437		
$200 \le \bar{x} < 400$	No. 3	$197 \le \bar{x} < 403$
$400 \le \bar{x} < 600$	No. 4	$397 \le \bar{x} < 603$

Fig. 8.2 - Ranges of transformed independent variable.

The motors of the interpolator mechanisms must be started at least one cycle before the transformed argument is read into the argument register. Depending upon the positions of the one-or-two-problem switch and the one-or-two-interpolation switch, operation-codes 20 and 21 are used to start the motors, Fig. 8.3. These codes may be entered only on lines 6, 12, 18, 24, and 30 of the coding form.

After the linear transformation has been applied to the independent variable x, $\bar{x}$ is read into the appropriate argument register accompanied by operation-code 22. Auxiliary circuits associated with register 037 (437) check that the argument lies in the proper range before continuing the positioning operation. Then operation-code 22 controls the selection of the proper mechanism, the positioning of the functional tape, and the delivery of the tabular values to the interpolation registers.

In order to obtain $\overline{X}$, the integral part of the transformed argument $\bar{x}$ from the argument register, special out-relays are provided on the upper and exponent columns of the register. This read-out is controlled by out-code (123). Many central difference formulas require the quantity 1/2. This may be obtained from a constant register by using out-code (125) and −1/2 by entry of sign-code 3.

The interpolator mechanisms are in many respects similar to the sequence mechanisms. However, the interpolator mechanisms are independent of the calculator once the positioning procedure has been initiated and hence include their own cam units. Also the interpolator mechanisms are equipped with both a forward and a reverse drive. They are first driven forward at a high speed with the tape reading pins withdrawn from the tape and stopped under control of the argument register together with certain relays and commutators. The tape-reading pins are then lowered and the position of the tape checked. A geneva drive then steps the tape intermittently, as in the case of the sequence mechanisms, and the reading pins deliver the tabular values to the functional buss.

ONE - OR - TWO INTERPOLATION SWITCH	ONE-OR-TWO-PROBLEM SWITCH				
	ONE-PROBLEM POSITION			TWO-PROBLEM POSITION	
	ONE SEQ. MECH.	TWO SEQ. MECH.		TWO SEQ. MECH.	
		LEFT	RIGHT	LEFT	RIGHT
ONE INTERPOLATION ALL 4 MECH UNDER CONTROL OF REG. 037	20	20	X	20	X
TWO INTERPOLATION TWO LEFT MECH UNDER CONTROL OF REG. 037	20	20	X	20	X
TWO RIGHT MECH UNDER CONTROL OF REG. 437	21	X	21	X	20

Fig. 8.3 - Start motor codes.

Before starting a problem using the interpolator mechanisms, the following switches must be operated:

(1) the one - or - two - interpolation switches on the second and third panels of the left wing of the calculator, Plate XXVI;

(2) the third-or-seventh-order interpolation switches on the first and fourth panels of the left wing;

(3) the start switches on the mechanisms to be used must be turned on, Plate XXVIII.

If the interpolator mechanisms have not been in use over a period of time, the continuous run switches, Plate XXVIII, may be used to operate them manually before running the problem.

Figure 8.4 gives the timing of the calculator cam-controlled contacts and relays necessary to start an interpolator mechanism. Let it be assumed that code 20 has been entered on line 6 to start mechanisms No. 1 and No. 2.

Impulse 12 passing through the operation-pyramid as set up by code 20 energizes the left start mechanism relay, FA1, Fig. 8.5a. The positions of the one-or-two-problem switch shown in this figure should be compared with the start codes listed in Fig. 8.3.

Contact FA1-3 closes a circuit permitting an impulse to energize relay JA1, the d.c. breaker relay, Fig. 8.5b. This relay is held in the energized position until the end of the positioning and reading operation (when SB14-3NC and SB14-4NC open), until manually dropped out (PB17A),

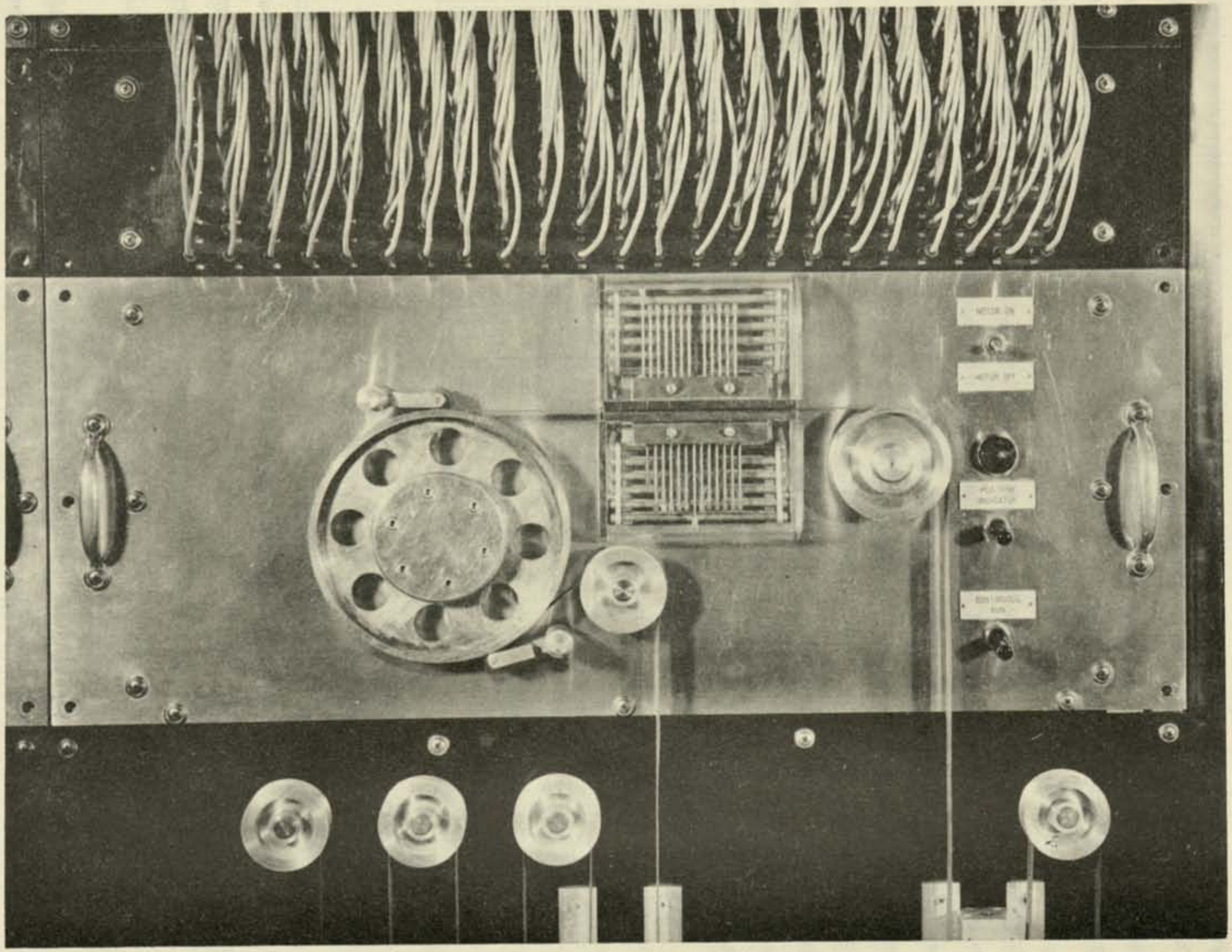

Plate XXVIII Front Panel of Interpolator Mechanism or until the time delay relay is energized (TDA1-1NC opens).

The positive side of the line is connected to interpolator mechanism panels No. 1 and No. 2 by JA1-1NO, Fig. 8.5d (and, if one interpolation is called for, to panels No. 3 and No. 4 as well). The disconnects and terminals shown in this circuit will appear in all subsequent circuits where elements are connected to the positive side of the line. As soon as JA1-1NO closes, the high speed clutch magnets, Fig. 8.6 and A of Plate XXIX, of the appropriate interpolator mechanisms are engaged, Fig. 8.5e.

The start motor relay UA1 is energized (and UB1 if one interpolation is indicated) by an impulse 16-21 passing through FA1-2NO, Fig. 8.5c. The closing of contacts UA1-2NO and UA1-3NO starts the motors B, Plate XXIX, of mechanisms No. 1 and No. 2, Fig. 8.5f. It should be noted that this circuit is completed through contacts of the start switches C, Plate XXIX, and the limit switches on the covers of the mechanisms. The mechanisms then operate at high speed in the forward direction.

Contacts of the continuous run switch used to operate the mechanisms manually appear in the circuits engaging the high speed clutch, Fig. 8.5e, and starting the motors, Fig. 8.5f.

At least one cycle after the entry of operation-code 20 or 21, the transformed argument is read into register 037 accompanied by operation-code 22, coding line 6. Figure 8.7a lists the relays associated with register 037 and Fig. 8.7b shows their timing.

Impulse 11. (a) The delay timer is started in operation.

(b) The in-relay of register 037, IA1-IA8, is energized by an impulse passing through the in-pyramid as set up by in-code (037).

(c) Register 037 is reset.

Impulse 12. (a) The transformed argument $\overline{X}$ is read into register 037.

(b) The start interpolation relay, QA1, is energized by an impulse passing through the operation-pyramid as set up by operation-code 22 and through IA8-5NO, Fig. 8.7c.

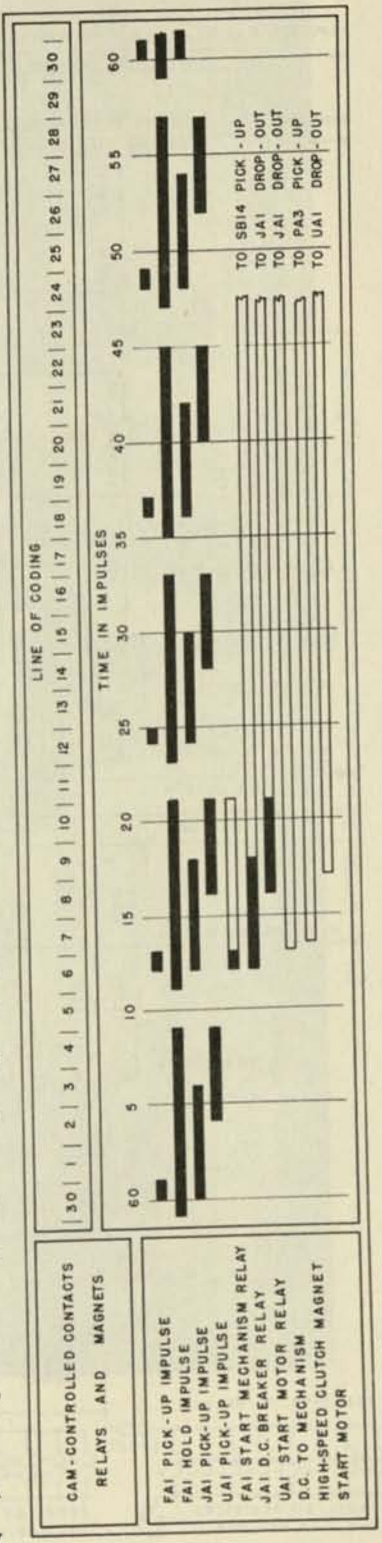

Fig. 8.4 - Motor timing.

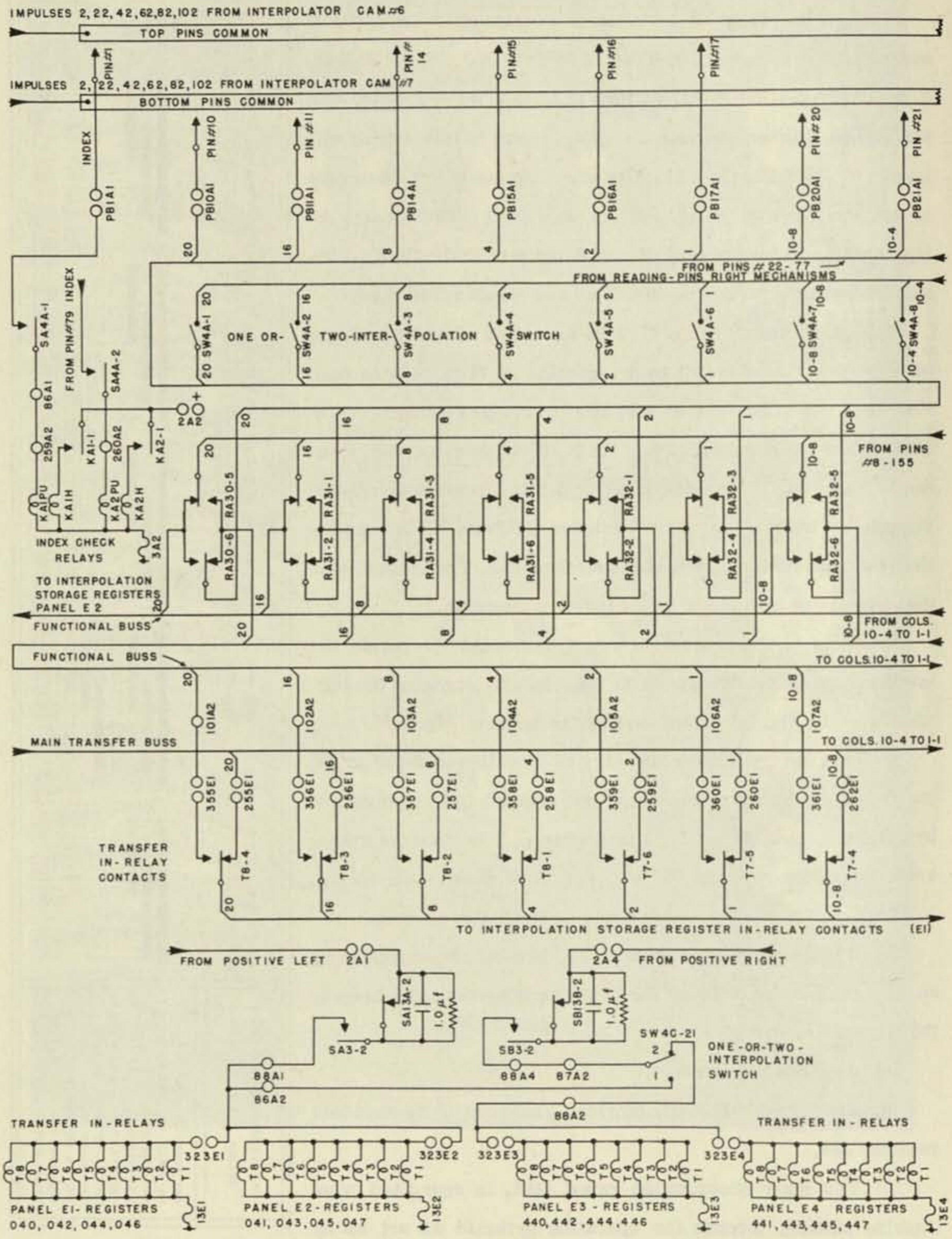

Fig. 8.5 - Circuit to start interpolator mechanisms.

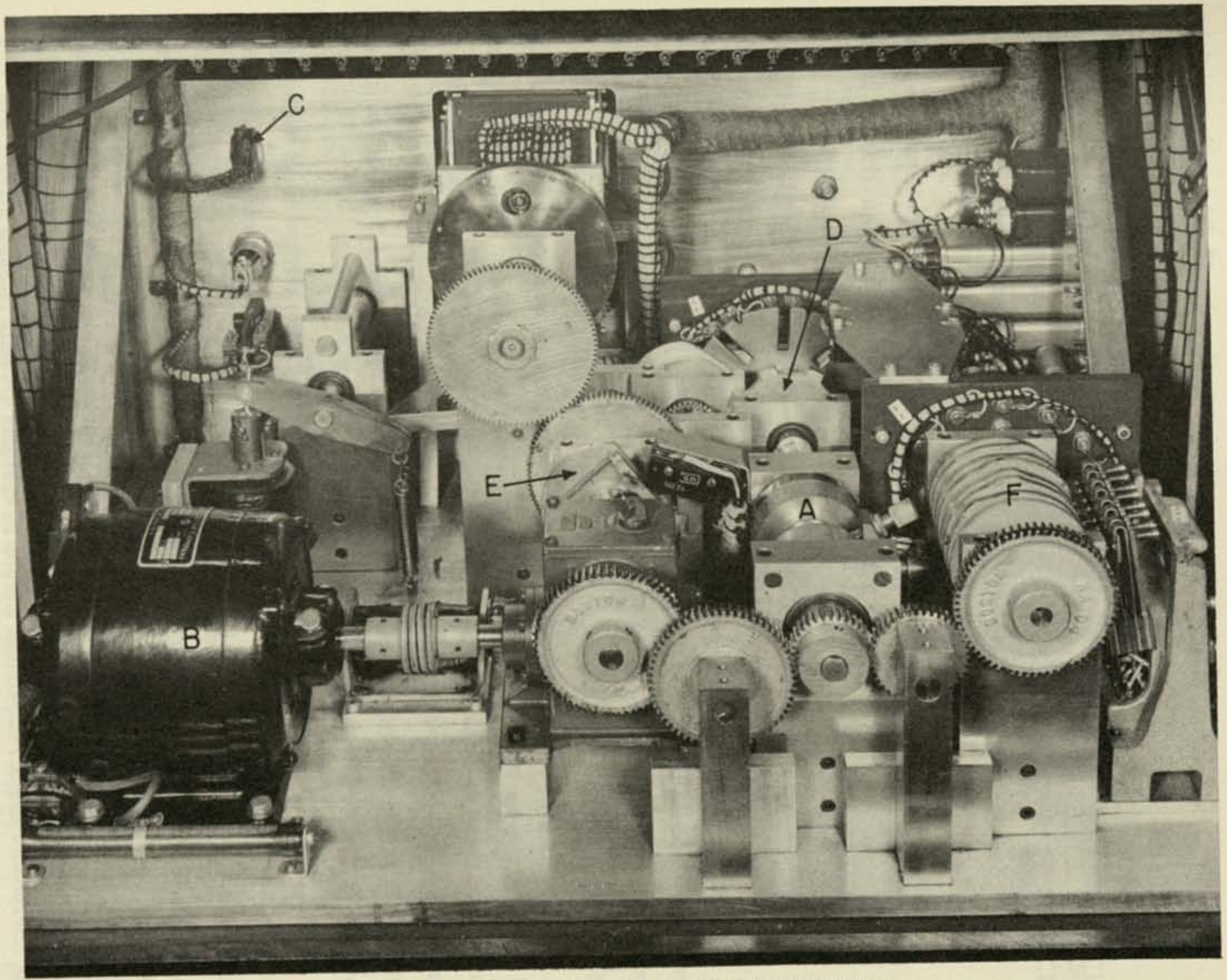

Plate XXIX Interpolator Mechanism: interior view

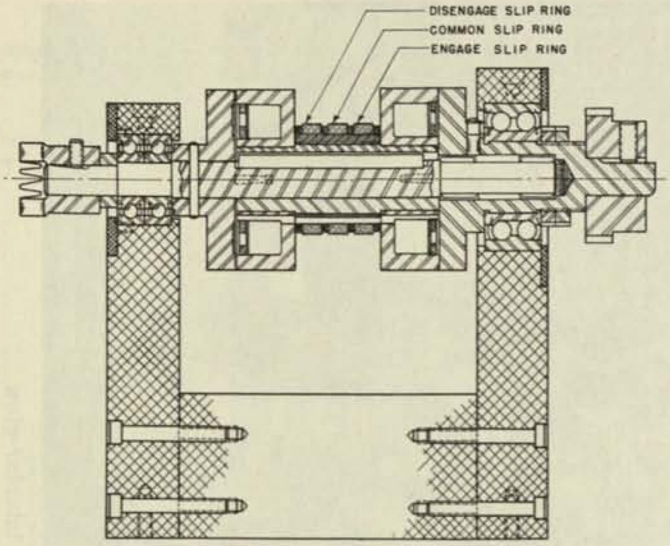

Fig. 8.6 - High-speed magnetic clutch.

Impulse 13. (a) Auxiliary register relays as listed in Fig. 8.7a are energized by an impulse passing through QA1-4NO. These relays duplicate the 1- and 2-relays of column 9 and the 8-, 4-, and 2-relays of column 8 of register 037.

(b) The interpolation relay MA1 is energized by an impulse passing through QA1-3NO, Fig. 8.7d.

(c) The check relay EA1 is energized by an impulse passing through the circuit shown in Fig. 8.7e. This circuit is completed if, and only if, the exponent of the argument is +2, the argument is positive, and the digit d standing in the tenth machine column is $1<d<6$ for two interpolations ($1<d\leq 9$ for one interpolation).

Impulse 14. (a) The tape selector relays are energized by an impulse passing through the circuit shown in Fig. 8.7f. The tape selector relays of mechanism No. 1, GA1-GA3, are energized if the digit standing in column 10 of register 037 is 2 or 3. The tape selector relays of mechanism No. 2, GA4-GA6, are energized if the digit standing in column 10 of register 037 is 4 or 5. (If one interpolation is called for digits 6 and 7 select mechanism No. 3, and digits 8 and 9 select mechanism No. 4.)

(b) An impulse passes through the circuit shown in Fig. 8.8 to energize one of the thirteen tape positioning relays, CA1-CA13. It should be noted that this is a cascade circuit closed upon itself.

(c) An impulse passes through a circuit similar to that shown in Fig. 8.8 to energize one of the eight tape-positioning relays, DA1-DA8.

Impulse 15. (a) If the check relay EA1 is not energized; that is, if the argument does not fall in the proper range, an interpolator check relay ITL1 is energized, Fig. 8.9. Contacts of the interpolator check relays close circuits to energize the main machine alarms, Fig. 6.34, and stop the calculator.

(b) If relay RA29, the 1-relay of column 8 of register 037 is energized, the even-odd relays are energized. If relay RA29 is not energized, the even-odd relays RA30-RA45 are reset.

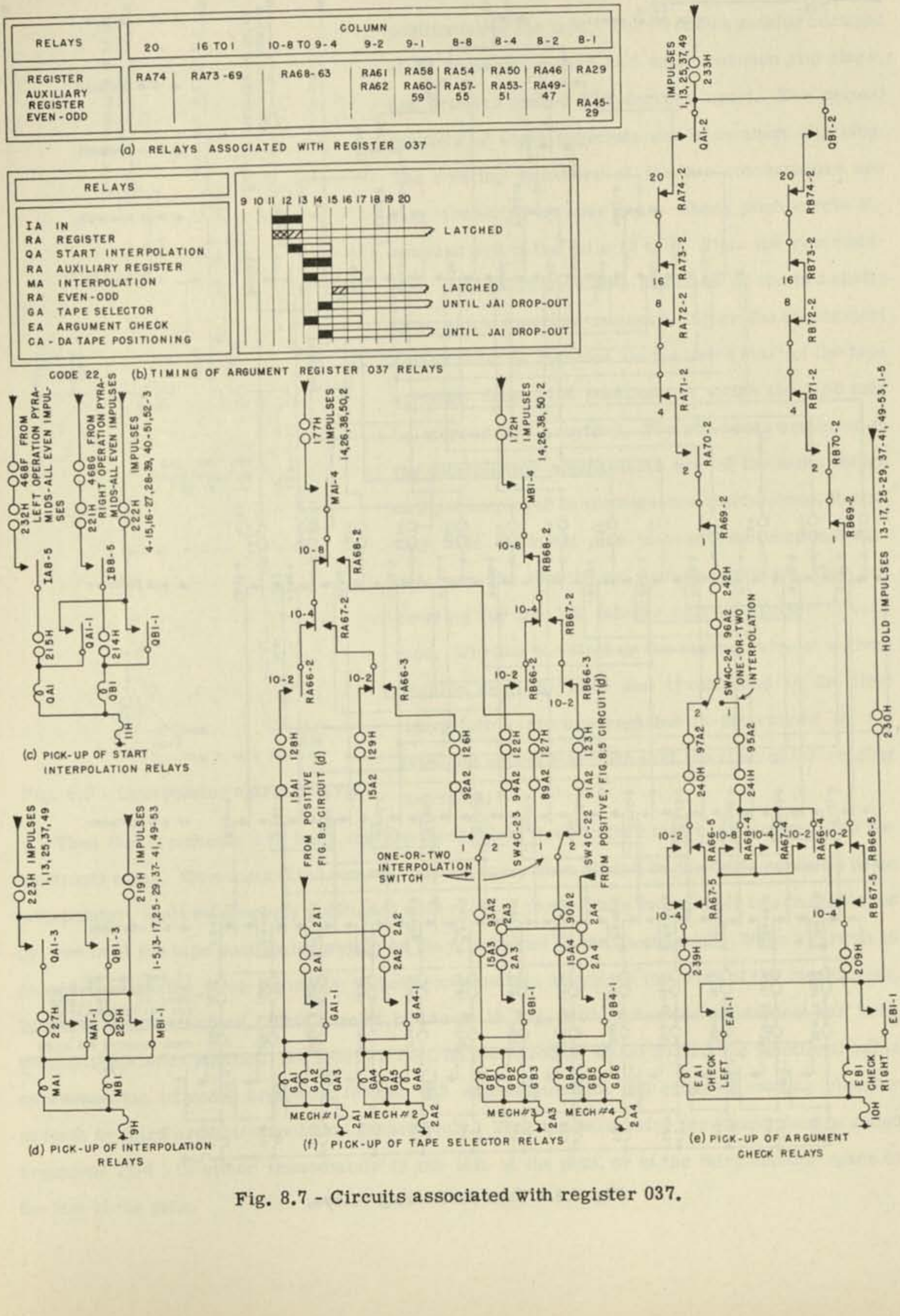

RELAYS	COLUMN 20	16 TO 1	10-8 TO 9-4	9-2	9-1	8-8	8-4	8-2	8-1
REGISTER	RA74	RA73-69	RA68-63	RA61	RA58	RA54	RA50	RA46	RA29
AUXILIARY REGISTER				RA62	RA60-59	RA57-55	RA53-51	RA49-47	
EVEN-ODD									RA45-29

(a) RELAYS ASSOCIATED WITH REGISTER 037

(b) TIMING OF ARGUMENT REGISTER 037 RELAYS

(c) PICK-UP OF START INTERPOLATION RELAYS

(d) PICK-UP OF INTERPOLATION RELAYS

(e) PICK-UP OF ARGUMENT CHECK RELAYS

(f) PICK-UP OF TAPE SELECTOR RELAYS

Fig. 8.7 - Circuits associated with register 037.

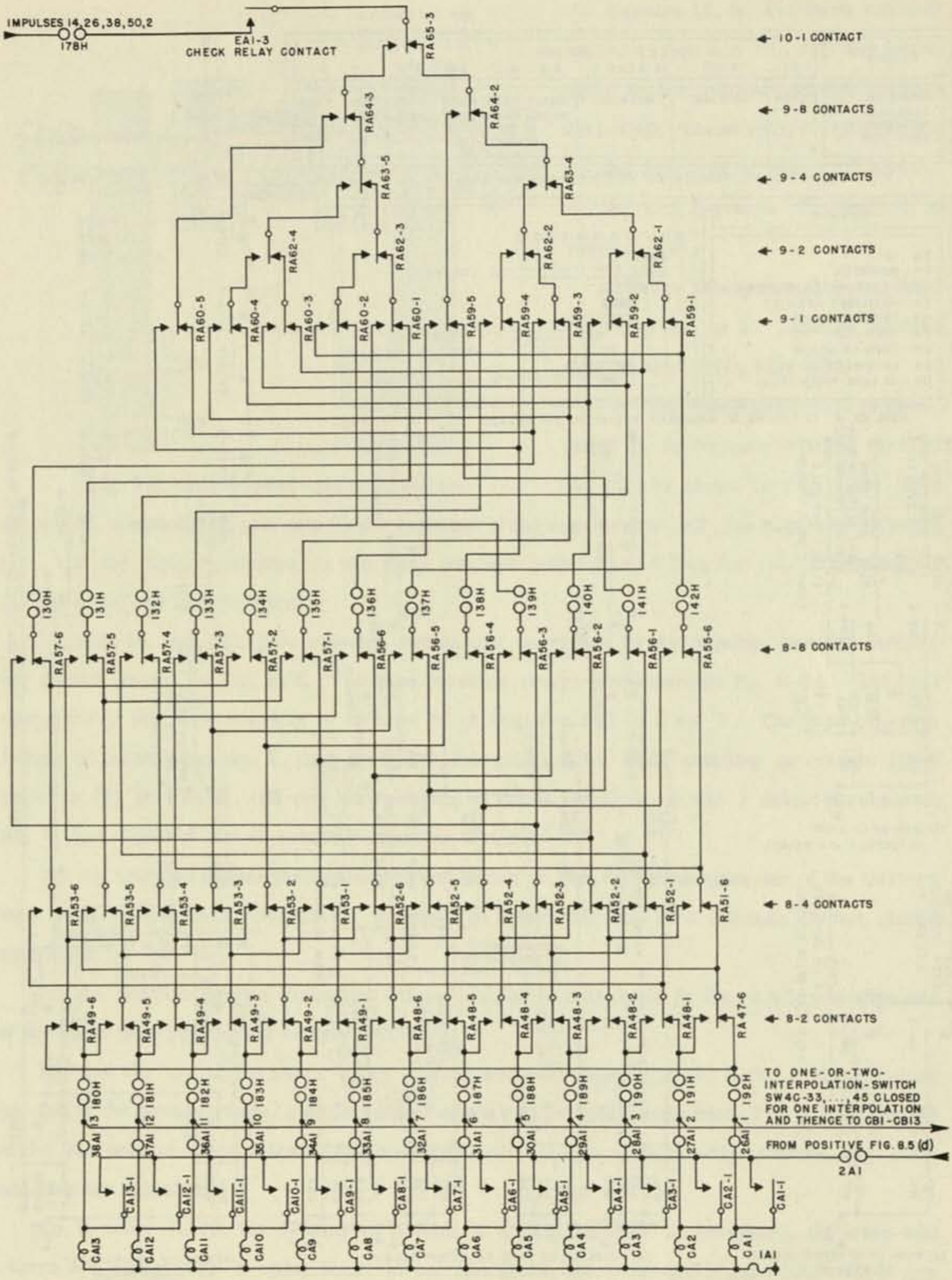

Fig. 8.8 - Tape positioning relays.

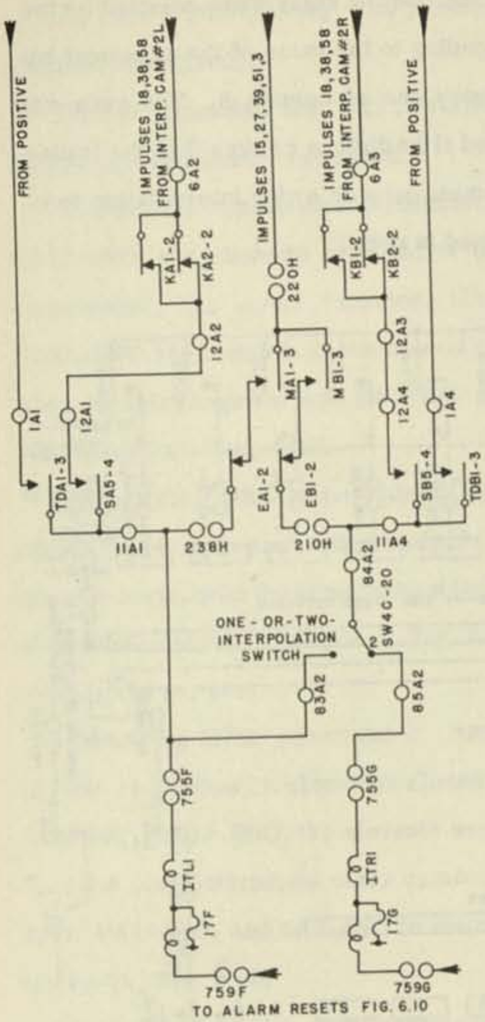

Fig. 8.9 - Interpolator alarm relays.

Two commutators, Fig. 8.10, control the correct positioning of the tape. The first commutator consists of 13 segments, inner and outer common slip rings, and brushes spaced 332 degrees apart. The second consists of eight segments and a common slip ring. The rotating members of the two commutators are gear-connected by spur gears whose pitch circle diameters are in the ratio 13 to 8. Thus the commutators demark 104 relative positions of the two shafts upon which they are mounted. Since the 13-segment commutator is mounted on the drive shaft of the tape sprocket drum, 104 positions at which the tape may be stopped are provided. The pin-boxes employed in the interpolator mechanisms are of the same design as those employed in the sequence mechanisms. Hence, they have sufficient pins to read two functional values from the tape in one reading operation, thus accounting for the 208 tabular entries allotted to each tape. Whether the first or the second value at a given position shall be read and transferred to the first interpolation storage register is determined by the even-odd relays RA30-RA45 at the time of the reading operation.

Thus the arguments are built into the mechanism itself rather than being entered into the functional tapes. Obviously this requires that the tape, when placed on the drive sprocket of an interpolator, shall be properly positioned with respect to a certain index. This is accomplished by means of the tape positioning switch on the front panel of the mechanism. When a circuit is closed through the first segments of both commutators a light on the front of the mechanism, Plate XXVIII, is lighted. This circuit is shown in Fig. 8.10. After the mechanism has been turned to the index position, the tape is placed on the sprocket wheel so that the functional value corresponding to coded argument 197 or 199 stands under the left group of reading pins for seventh or third order interpolation respectively. Thus the zero value (corresponding to coded argument 204) is either immediately to the left of the pins, or in the third number space to the left of the pins.

During impulse 14, one CA and one DA relay were selected by the circuits of register 037, corresponding to the value of the argument but omitting consideration of the binary one of column 8. The even-odd relays (RA30-RA45) were energized if the digit in column 8 of the transformed argument was odd. Assuming seventh order interpolation to be desired, two cases will be examined in detail:

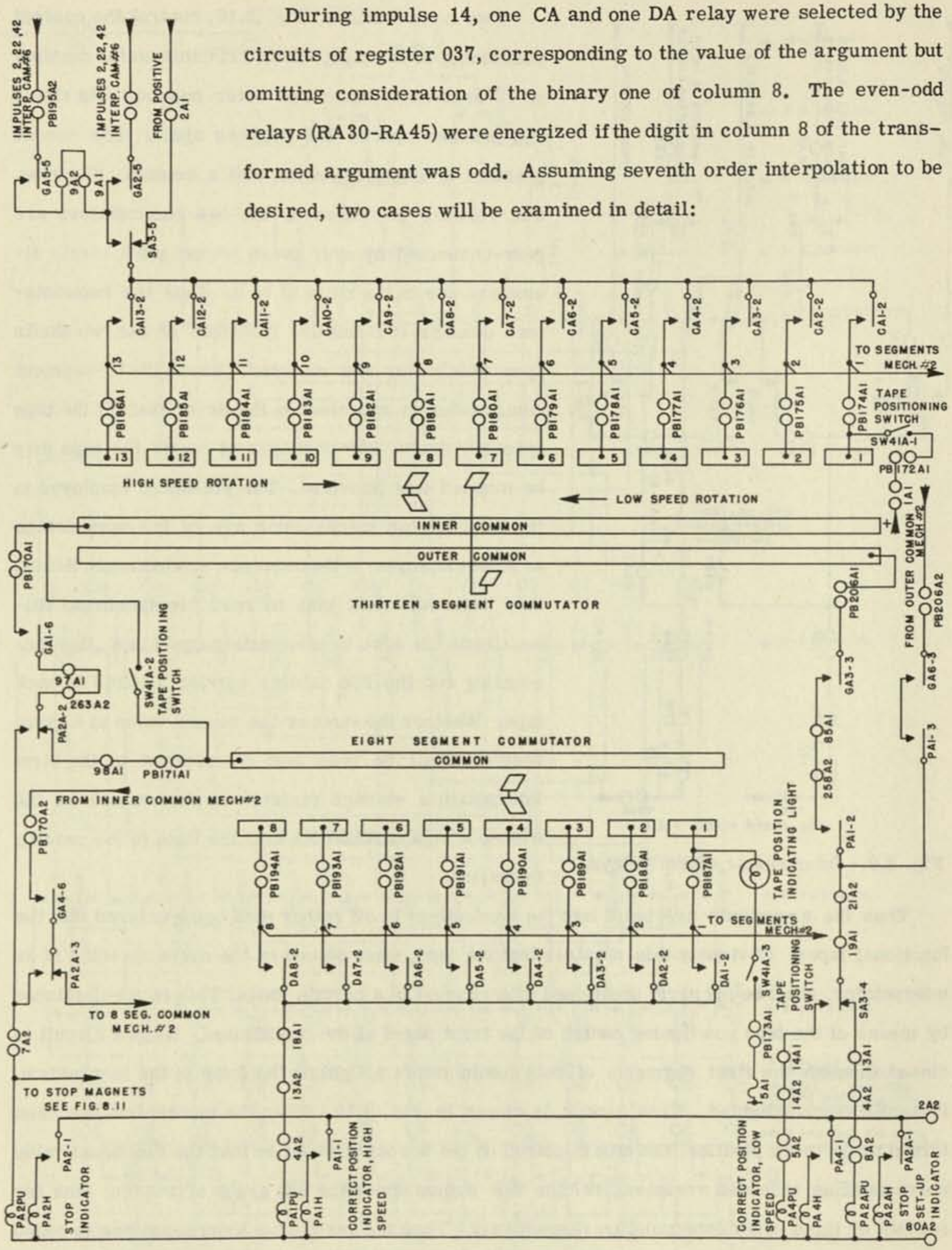

Fig. 8.10 - Interpolator mechanism No. 1, commutators.

(1) even argument, say 220 , relays CA11 and DA3 energized;

(2) odd argument, say 221 , relays CA11, DA3, and RA30-RA45 energized.

A circuit is completed through SA3-5NC, CA11-2NO, the eleventh segment of the first commutator, its inner common, GA1-6NO, PA2A-2NC, the common of the second commutator, its third segment, and DA3-2NO to energize relay PA1, Fig. 8.10.

When relay PA1 is energized, PA1-5NC and PA1-6NC open connecting variable resistances in series with the armatures of the motors of mechanisms No. 1 and No. 2, Fig. 8.5f, thus slowing the motors.

When the first commutator completes a partial revolution, a circuit is closed through SA3-5NC, CA11-2NO, the eleventh segment of the first commutator, its outer common, GA3-3NO, PA1-2NO, and SA3-4NC to energize relay PA2A, Fig. 8.10.

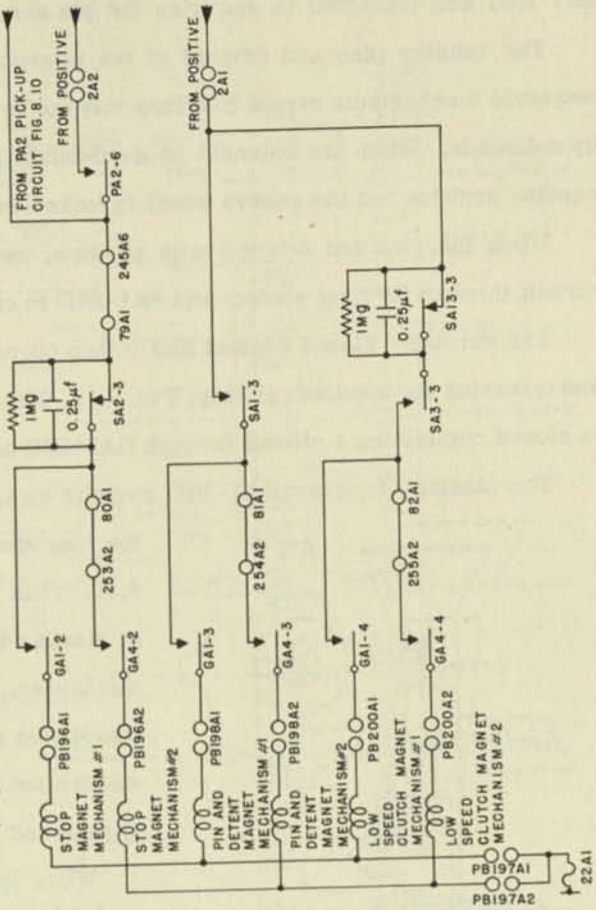

Fig. 8.11 - Stop and read magnets.

Relay PA2 and the stop magnets of mechanism No. 1 are energized by an impulse passing through SA3-5NC, CA11-2NO, the eleventh segment of the first commutator, its inner common, GA1-6NO, and PA2A-2NO to relay PA2, Fig. 8.10, and through SA2-3NC and GA1-2NO to the stop magnet, Fig. 8.11.

The mechanical stop, Fig. 8.12 and D of Plate XXVIII, is operated by its solenoid thus stopping the tape drive sprocket drum. After the mechanical stop is operated, switch 43A is closed mechanically. The first contact of this switch completes a circuit, Fig. 8.13, to energize relays PA3 and SA1.

The transfer of contact PA3-2 from the normally closed to the normally open position disengages the magnetic clutch from its high speed running position, Fig. 8.5e. The closing of PA3-5NO shunts the variable resistance and permits the mechanism motor again to run at full speed.

The energizing of the first interpolator sequence relay SA1 completes a circuit through

SA1-3NO and GA1-3NO to energize the pin and detent magnet of mechanism No. 1, Fig. 8.11.

The reading pins and detents of the interpolator mechanisms are similar to those of the sequence mechanisms except that they may not be operated manually. Instead they are operated by solenoids. When the solenoid of mechanism No. 1 is energized, the pins are lowered into reading position and the geneva wheel is locked in its rest position by the detent.

When the pins and detent are in position, switch 44A is mechanically closed completing a circuit through its first contact and SA1-2NO to energize relay SA2, Fig. 8.13.

The normally closed contact SA2-3 then opens, interrupting the circuits to the stop magnet and releasing the mechanical stop, Fig. 8.11. When the mechanical stop is released, switch 45A is closed completing a circuit through GA3-2NO and SA2-2NO to energize relay SA3, Fig. 8.13.

The closing of contact SA3-3NO permits an impulse to pass through GA1-4NO to energize the low speed clutch magnet of mechanism No. 1, Fig. 8.11. This single revolution clutch, E of Plate XXVIII, is similar to the modified type employed in the sequence mechanism, Fig. 6.3. This clutch permits the motor to operate the pin-box and detent cams and the geneva drive mechanism by which the intermittent motion necessary to read and step the tape is provided.

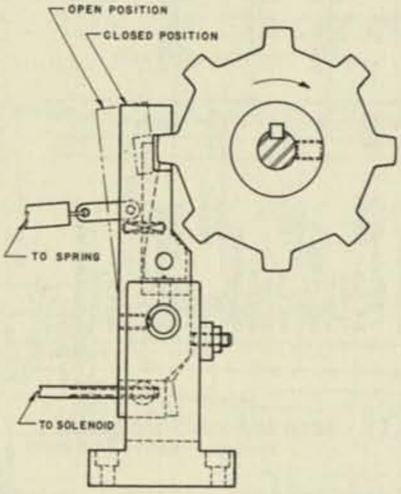

Fig. 8.12 - Mechanical stop.

When the interpolator sequence relay SA3 is energized, contact SA3-2NO completes a circuit, Fig. 8.16, to energize the transfer in-relays, T1-T8, for panels E1 and E2. These relays connect the functional buss to the in-relay contacts of registers 040 through 047.

The interpolator cam unit, F of Plate XXVIII, now assumes control of the mechanism, Fig. 8.14. Impulses are supplied by the sixth cam-controlled contact to the segments of the first commutator through SA3-5NO. When the outer common brush reaches the eleventh segment, a circuit is completed through GA2-5NO, SA3-5NO, CA11-2NO, the eleventh segment, the outer common, GA3-3NO, PA1-2NO, and SA3-4NO to energize relay PA4 which indicates that the pins will read next the first required functional value f_{-3}.

Impulse 18. (a) The first read relay SA4-SA4A is energized by an impulse passing through GA2-2NO, SA5-3NC, and PA4-2NO, Fig. 8.13.

Impulse 20. (a) Register 040 is reset by an impulse passing through GA1-5NO, SA13-4NC, SA4-3NO, and SA6-3NC, Fig. 8.15.

(b) Register 041 is reset by an impulse passing through a similar circuit and contact RA29-

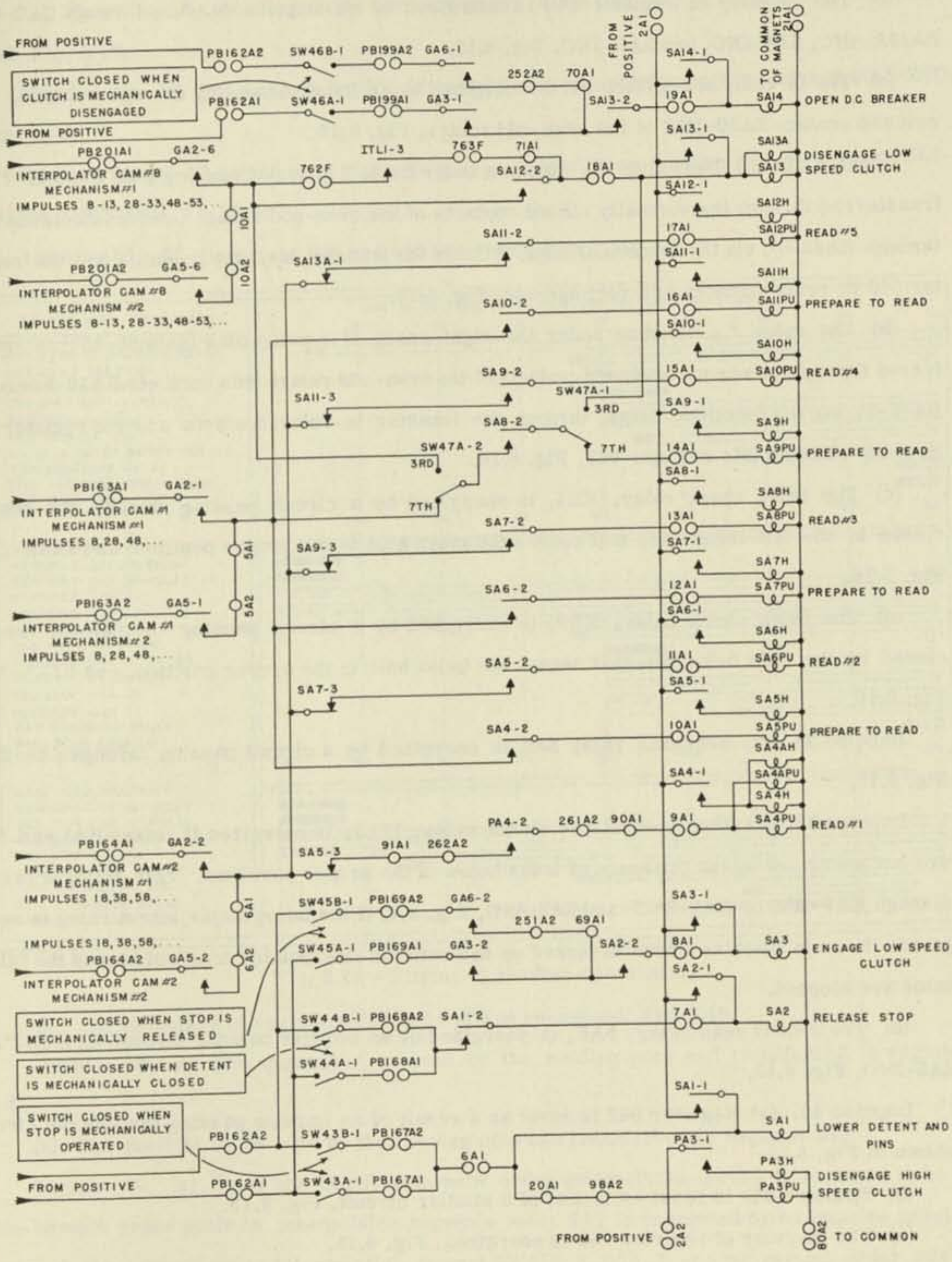

Fig. 8.13 - Relays controlling stopping and reading.

2NC, a contact of the 1-relay of column 8 of register 037, Fig. 8.15.

(c) The in-relay of register 040 is energized by an impulse passing through GA2-4NO, SA13A-4NC, SA4-5NO, and SA6-5NC, Fig. 8.15.

(d) The in-relay of register 041 is energized by an impulse passing through a similar circuit and contact RA30-1NC of the even-odd relays, Fig. 8.15.

Impulse 22. (a) The value f_{-3} standing under the left group of reading pins (pins 10-77) is transferred through the normally closed contacts of the even-odd relays (even contacts RA30-6 through RA45-6), via the functional buss, through the transfer in-relay contacts and the register 040 in-relay contacts into register 040, Fig. 8.16.

(b) The value f_{-2} standing under the right group of reading pins (pins 88-155) is transferred through the normally closed contacts of the even-odd relays (odd contacts RA30-5 through RA45-5), via the functional buss, through the transfer in-relay contacts and the register 041 in-relay contacts into register 041, Fig. 8.16.

(c) The index check relay, KA1, is energized by a circuit passing through the contact closed by the left index pin, if it senses the index hole in the proper position, and SA4A-1NO, Fig. 8.16.

(d) The index check relay, KA2, is energized by a circuit passing through the contact closed by the right index pin, if it senses the index hole in the proper position, and SA4A-2NO, Fig. 8.16.

Impulse 28. (a) Sequence relay SA5 is energized by a circuit passing through SA4-2NO, Fig. 8.13.

Impulse 38. (a) The interpolator alarm relay, ITL1, is energized if relays KA1 and KA2 are not energized by the presence of index holes in the proper positions. This impulse passes through KA1-2NC or KA2-2NC and SA5-4NO, Fig. 8.9. If the interpolator alarm relay is energized, the main machine alarm is picked up and both the interpolator mechanism and the calculator are stopped.

(b) The second read relay, SA6, is energized by an impulse passing through SA7-3NC and SA5-2NO, Fig. 8.13.

Impulse 40. (a) Register 042 is reset as a result of an impulse passing through the circuit shown in Fig. 8.15.

(b) Register 043 is reset by means of a similar circuit, Fig. 8.15.

(c) The in-relay of register 042 is energized, Fig. 8.15.

(d) The in-relay of register 043 is energized, Fig. 8.15.

Impulse 42. (a) The value f_{-1} standing under the left group of reading pins is transferred to register 042, Fig. 8.16.

(b) The value f_0 standing under the right group of reading pins is transferred to register 043, Fig. 8.16.

Impulse 48. (a) Sequence relay SA7 is energized by an impulse passing through SA6-2NO, Fig. 8.13.

Impulse 58. (a) The third read relay, SA8, is energized by an impulse passing through SA9-3NC and SA7-2NO, Fig. 8.13.

Impulse 60. (a) Registers 044 and 045 are reset, Fig. 8.15.

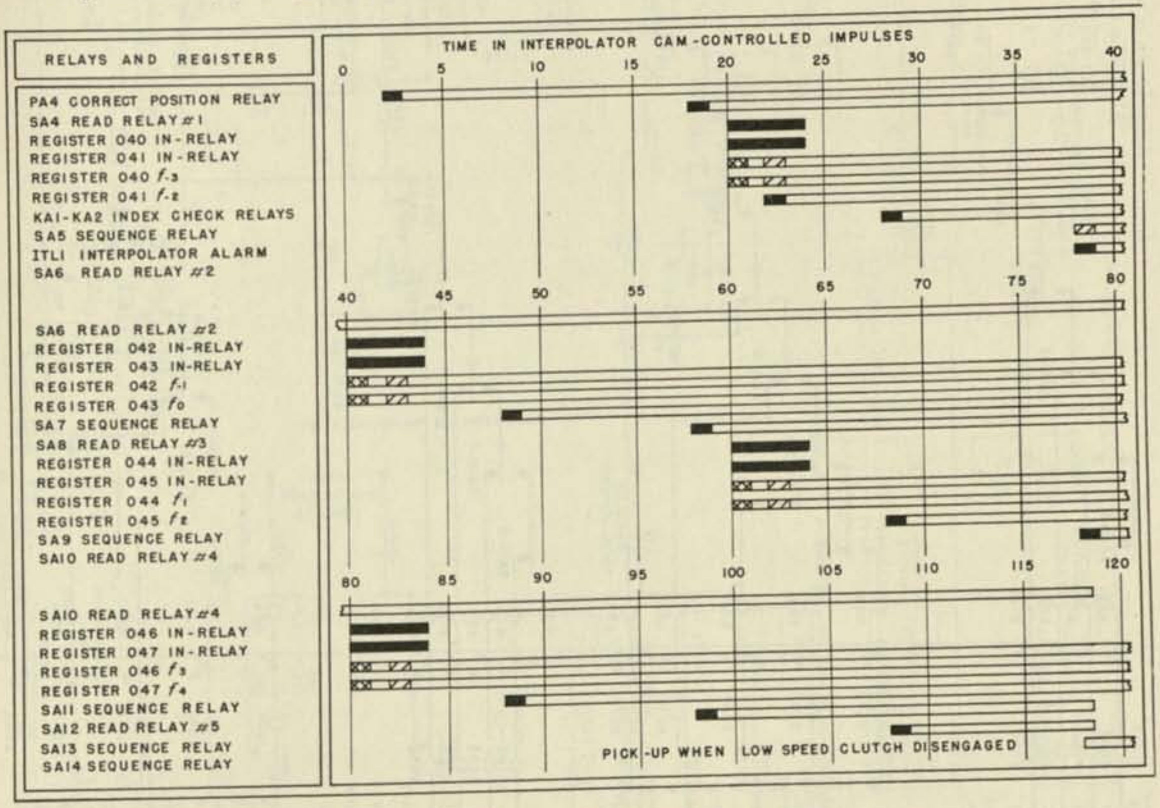

Fig. 8.14 - Timing of reading operations.

(b) The in-relays of registers 044 and 045 are energized, Fig. 8.15.

Impulse 62. (a) The quantity f_1 is read by the reading pins and transferred to register 044.

(b) The quantity f_2 is read by the reading pins and transferred to register 045.

Impulse 68. (a) Since the third or seventh order interpolation switch is assumed to be in the seventh order position, interpolator sequence relay SA9 is energized by an impulse passing through the seventh order interpolation contact SW47A-2, SA8-2, and the seventh order interpolation contact SW47A-1.

Impulse 78. (a) The fourth read relay SA10 is energized, Fig. 8.13.

Impulse 80. (a) Registers 046 and 047 are reset, Fig. 8.15.

(b) The in-relays of registers 046 and 047 are energized, Fig. 8.15.

Impulse 82. (a) The tabular entry f_3 is transferred to register 046.

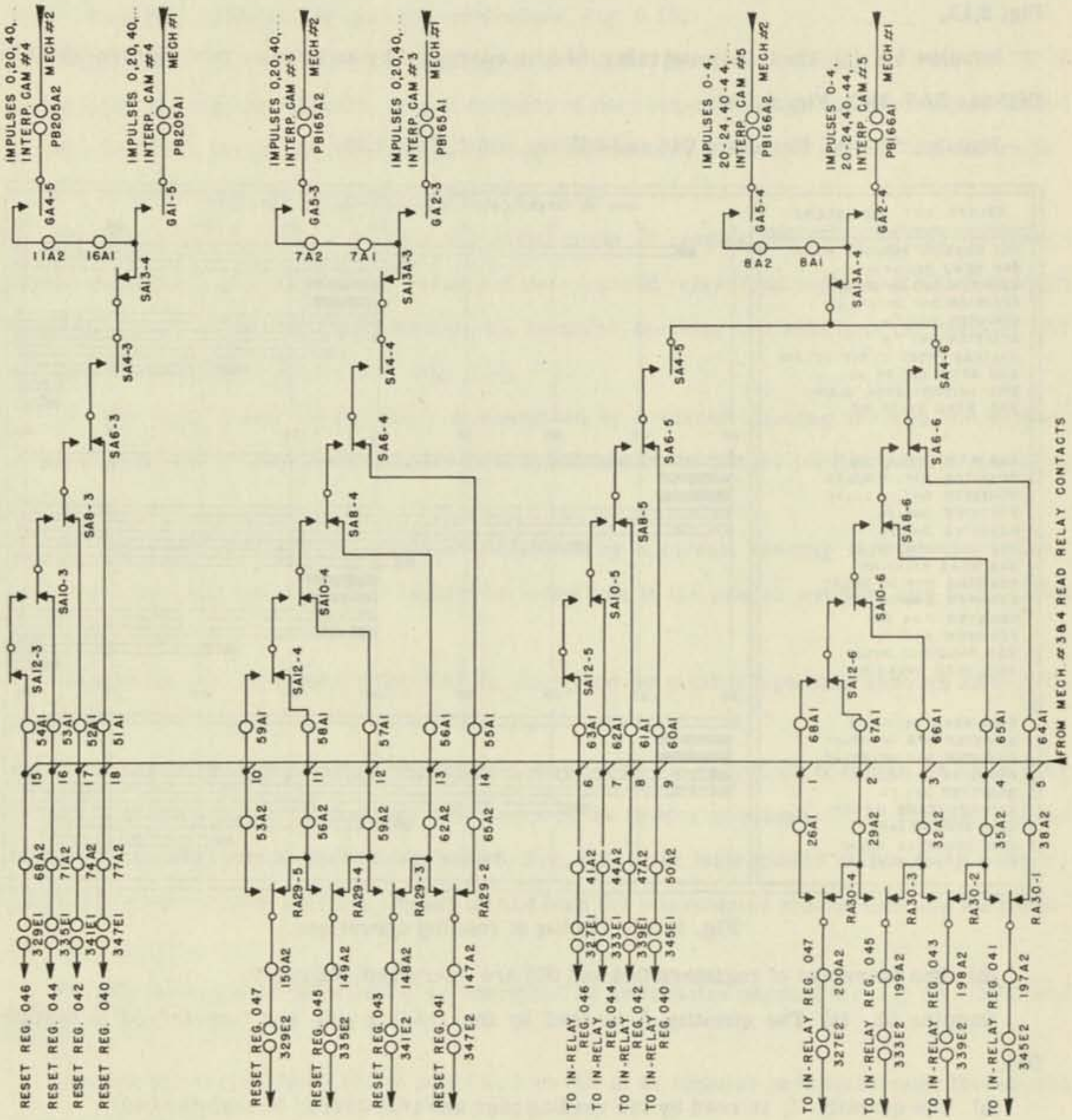

Fig. 8.15 - Interpolator storage registers, in-relays and resets.

(b) The tabular entry f_4 is transferred to register 047.

Impulse 88. (a) Sequence relay SA11 is energized by an impulse passing through SA10-2NO, Fig. 8.13.

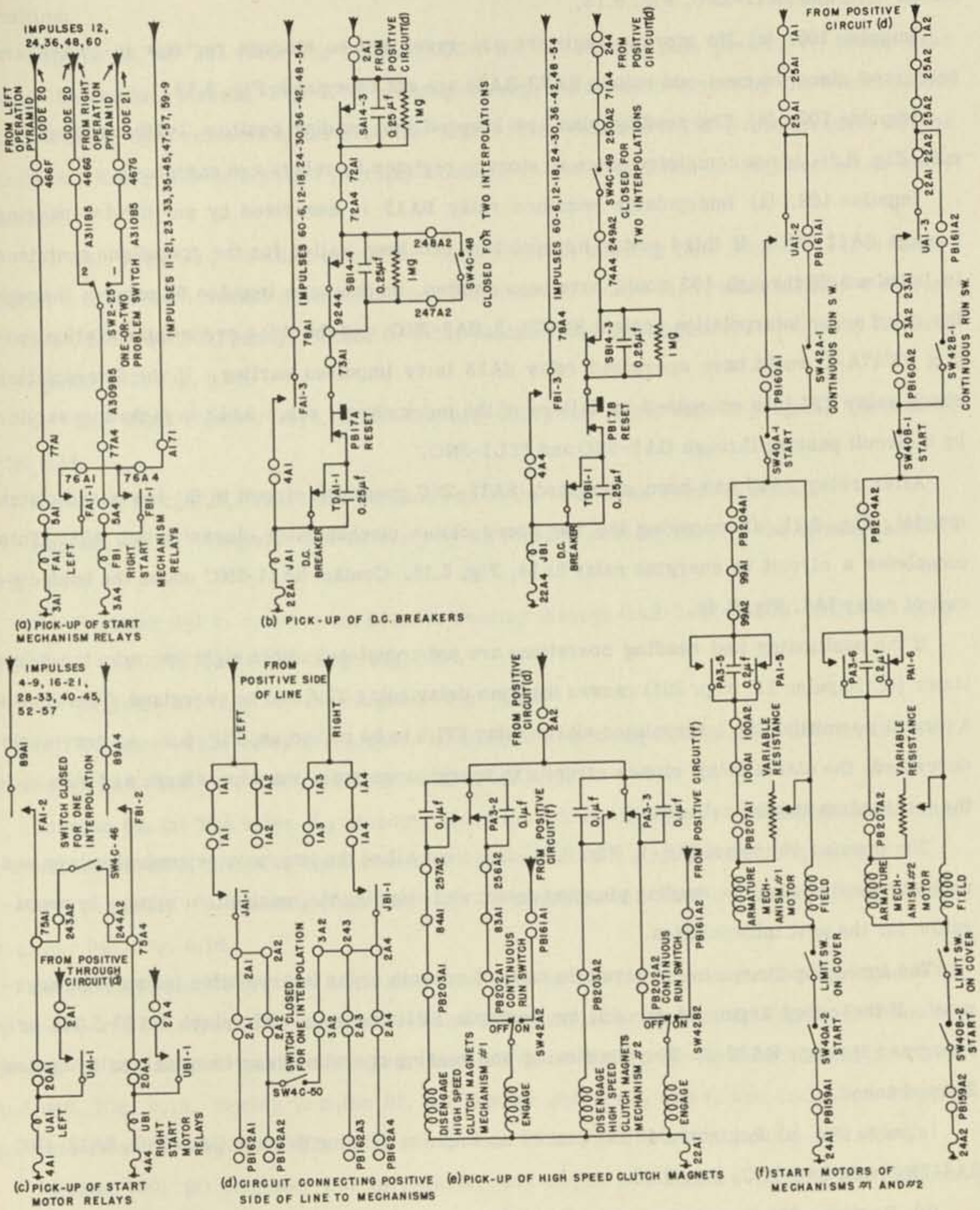

Fig. 8.16 - Tape-reading circuit.

Impulse 98. (a) The fifth read relay SA12 is energized by an impulse passing through SA13A-1NC and SA11-2NO, Fig. 8.13.

Impulse 100. (a) No storage registers are reset and no storage register in-relays are energized since the even-odd relays RA29-RA30 are not energized, Fig. 8.15.

Impulse 102. (a) The reading pins are lowered into reading position, but the reading circuit, Fig. 8.16, is not completed since no storage register in-relays are energized.

Impulse 108. (a) Interpolator sequence relay SA13 is energized by an impulse passing through SA12-2NO. If third order interpolation had been called for the operations contained in impulses 68 through 102 would have been omitted. In this case impulse 68 passing through the third order interpolation contact SW47A-2, SA8-2NO, and the third order interpolation contact SW47A-1 would have energized relay SA13 forty impulses earlier. If the interpolation check relay ITL1 is energized by failure of the index check, relay SA13 is picked up earlier by a circuit passing through GA2-6NO and ITL1-3NO.

After relay SA13 has been energized, SA13-2NC opens the circuit to the low speed clutch magnet, Fig. 8.11. Disengaging the low speed clutch mechanically closes switch 46A. This completes a circuit to energize relay SA14, Fig. 8.13. Contact SA14-3NC opens the hold circuit of relay JA1, Fig. 8.4b.

If the positioning and reading operations are not completed within eight seconds, the delay timer (cf. impulse 11, page 201) causes the time delay relay TDA1 to be energized. This closes a circuit permitting the interpolator alarm relay ITL1 to be picked up, Fig. 8.9. As previously described, the alarm relay closes circuits to energize the main machine alarm and stop both the mechanism and the calculator.

The opening of contact JA1-1, Fig. 8.5d, drops out all of the interpolator control relays and magnets, thus raising the reading pins and detent and stopping the mechanism motors in preparation for the next interpolation.

The foregoing discussion covered the case of seventh order interpolation for an even argument. If the coded argument is odd, for example 221, the even-odd relays RA30-RA45 are energized through RA29-6. The positioning and reading operations are identical until impulse 20 is reached.

Impulse 20. (a) Register 040 is reset by an impulse passing through GA1-5NO, SA13-4NC, SA4-3NO, and SA6-3NC, Fig. 8.15.

(b) Register 041 is not reset since RA29-2 is in the normally open position.

(c) The in-relay of register 040 is energized by an impulse passing through GA2-4NO, SA13-4NC, SA4-5NO, and SA6-5NC, Fig. 8.15.

(d) The in-relay of register 041 is not energized since RA30-1 is in the normally open position.

Impulse 22. (a) The value f_{-4} standing under the left reading pins (pins 10-77) is not read since the reading circuit, Fig. 8.16, passing through the contacts closed by the reading pins, the normally open contacts of the even-odd relays (even contacts RA30-6 through RA45-6), the functional buss, and the transfer in-relay contacts is not completed by register 041 in-relay contacts.

(b) The value f_{-3} standing under the right group of reading pins (pins 88-155) is transferred through the normally open contacts of the even-odd relays (odd contacts RA30-5 through RA45-5), the functional buss, transfer in-relay contacts, and the register 040 in-relay contacts to register 040, Fig. 8.16.

(c) The index check relays, KA1-KA2, are energized if the tape is properly positioned, Fig. 8.16.

Impulses 28 and 38. These are the same as in the case of an even argument.

Impulse 40. (a) Register 042 is reset by an impulse passing through the circuit shown in Fig. 8.15.

(b) Register 041 is reset by an impulse passing through GA2-3NO, SA13A-3NC, SA4-4NO, SA6-4NO, SA8-4NC, and RA29-2NO, Fig. 8.15.

(c) Register 042 in-relay is energized, Fig. 8.15.

(d) Register 041 in-relay is energized by an impulse passing through GA2-4NO, SA13A-4NC, SA4-6NC, SA6-6NO, SA8-6NC, and RA30-1NO, Fig. 8.15.

Impulse 42. (a) The value f_{-2} standing under the left reading pins is routed by the selector circuit composed of normally open even-odd relay contacts to register 041, Fig. 8.16.

(b) The value f_{-1} standing under the right reading pins is routed by the selector circuit to register 042, Fig. 8.16.

Impulses 48 and 58 are the same as for the case of an even argument. During impulse 62, f_0 and f_1 are transferred to registers 043 and 044 by the selector circuit, Fig. 8.16. Impulses 68 and 78 are as previously described. Impulse 78 energizes the in-relays of registers 045 and 046, Fig. 8.15. During impulse 82, the tabular entries f_2 and f_3 are transferred by the selector circuit to register 045 and 046. Impulses 88 and 98 are as previously described.

Impulse 100. (a) Register 047 is reset by an impulse passing through GA2-3NO, SA13A-3NC, SA4-4NO, SA6-4NO, SA8-4NO, SA10-4NO, SA12-4NO, and RA29-5NO, Fig. 8.15.

(b) The in-relay of register 047 is energized by a similar circuit, Fig. 8.15.

Impulse 102. (a) The tabular entry f_4 is transferred to register 047, Fig. 8.16.

The remaining impulses terminating the interpolator operation are the same as those for an even argument.

If third order interpolation is to be performed, the position of the tape relative to the commutator segments is advanced by two number spaces. Thus, (for an even argument), the first two tabular values read and transferred to register 040 and 041, respectively, will be f_{-1} and f_0 . Only three reading operations are performed after which impulse 68 energizes relay SA13 initiating the terminal operations.

CHAPTER IX

INPUT AND OUTPUT DEVICES

Two means of introducing numerical data into the calculator have been described, the input registers and the interpolators. In addition, the machine is equipped with four tape-reading mechanisms which read sequential numerical data from perforated paper tapes. The tapes for these mechanisms, as for the interpolators, may be prepared either manually on the tape-preparation unit, or automatically by the calculator itself using the tape punches. These punches, one of the two types of output devices employed by the machine, when combined with the reading units, provide the calculator with external storage of unlimited capacity. The second type of output devices consists of page-printers for the recording of computed results in permanent form. Western Union Telegraph equipment, suitably modified, is used throughout these input and output components. The calculator can perform four reading and four punching operations every one and one-half seconds and initiate one printing operation every second.

The tape-reader, a Teletype Model 12A transmitter, is a five-wire synchronous mechanism using 11/16-inch wide paper tape with five intelligence holes (cf. page 30). The four tape-punches, one associated with each tape-reader, are five-wire synchronous mechanisms. They are known as Teletype Model 10B reperforators. The reading and punching units, Plate XXX, provide for the input and output of numerical data at a rate consistent with the speeds of the other components of the calculator. The standard operating rate of the readers and punches is 900 reading and stepping operations per minute. However, on the calculator they are operated at 600 reading and stepping operations per minute, thus insuring their trouble-free operation.

Four Model 15 Page-Printers[1] are mounted permanently on the operator's table, Plate III, while a fifth printer is provided as a spare and may be substituted for any one of the other four. These printers are single-wire asynchronous mechanisms. The electrical impulses necessary to the operation of each printer are supplied by an associated distributor. The proper characters are selected mechanically by five vanes running the length of the printer carriage. These vanes, Plate XXXI, serve a dual purpose. They not only select the type bars of the printer, but also operate contacts which provide a means of comparing the printed characters with the digits stored in the controlling print register. An operating speed of 460 operations per minute was selected.

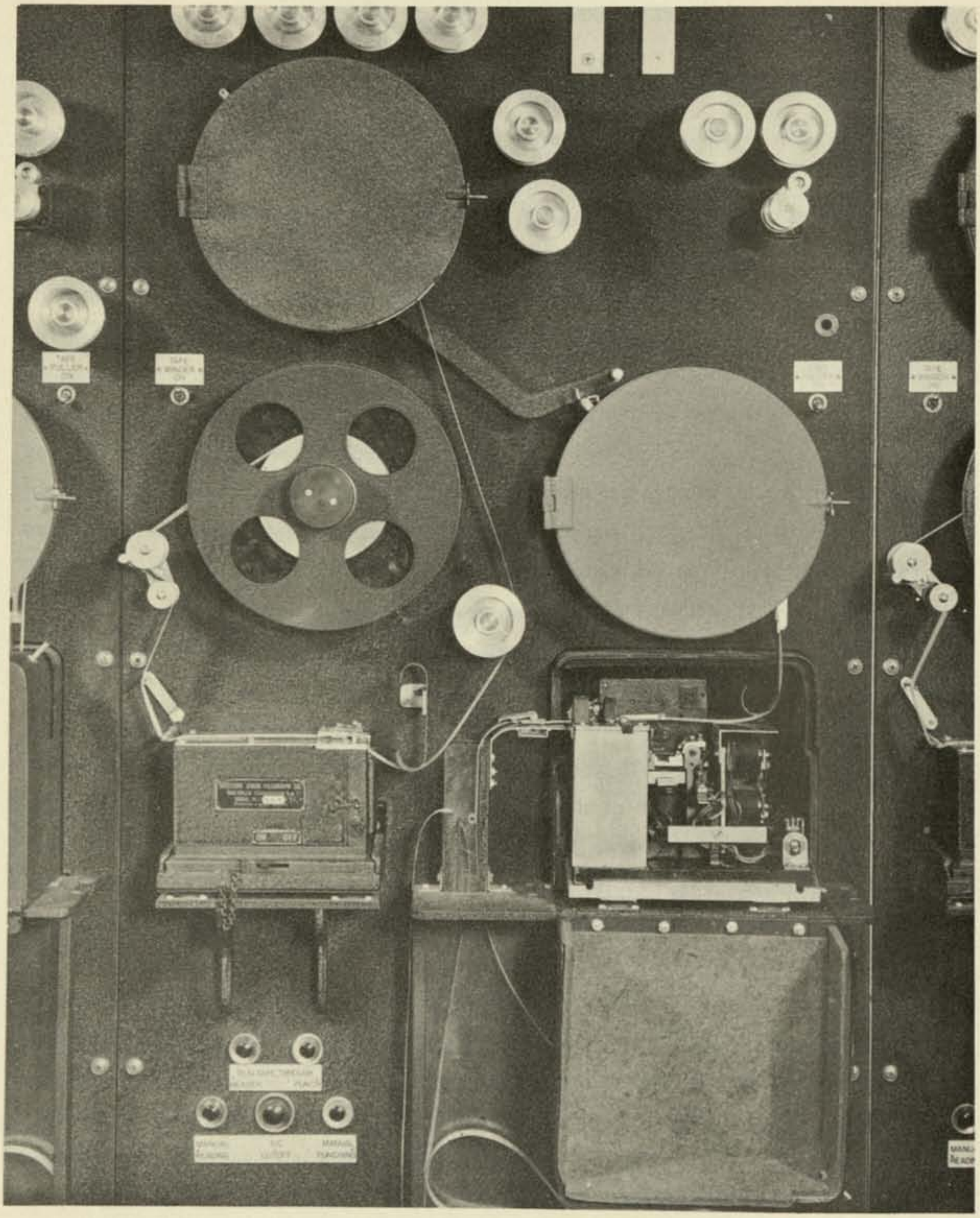

Plate XXX Detail of Tape-Reader and Tape-Punch

The panels on which the four tape-punches and tape-readers are mounted, Plate XXXII, offer a wide variety of operating procedures. These are:

(1) to read in numerical quantities from double-ended tape and rewind the tape,

(2) to read in numerical quantities from endless tape (up to 400 quantities),

(3) to punch computed results and store the tape in the accumulator bin,

(4) to punch computed results and automatically wind the tape on a reel,

(5) to punch quantities and subsequently to read the same quantities from the tape back into the calculator (a bight in the tape storing at least ten quantities).

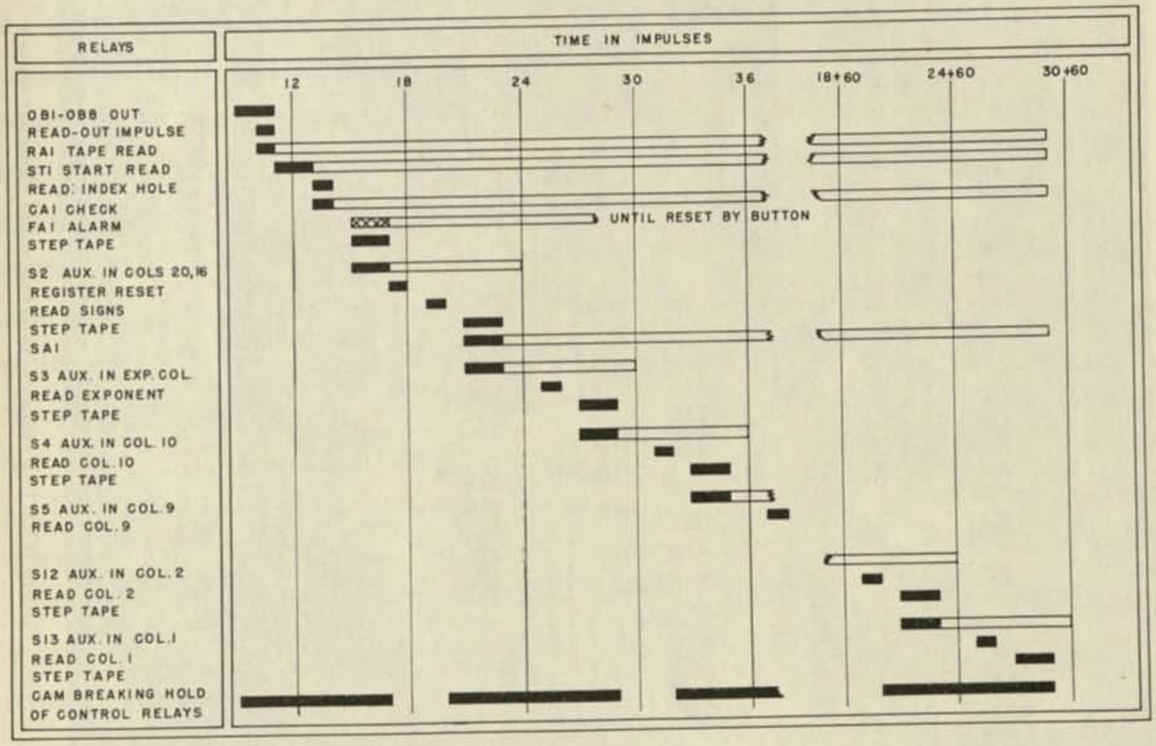

Fig. 9.1 - Tape-reader timing diagram.

Below each tape-reader are mounted five push buttons. These buttons are used for running tape through the punch or through the reader, for manually punching into the tape the quantity standing in the corresponding punch register, for reading a quantity from the tape into the associated read register, and for stopping the operation of the unit in case of emergency.

A tape-reading mechanism consists of five pins sensing one row of holes across the tape, Fig. 1.3, while the tape is at rest, and an intermittent sprocket drive, operated by a solenoid, stepping the tape one row of holes at a time. A complete description of the mechanical details of this standard device and of the tape punch will be found in the publications of the Western Union Telegraph Company.

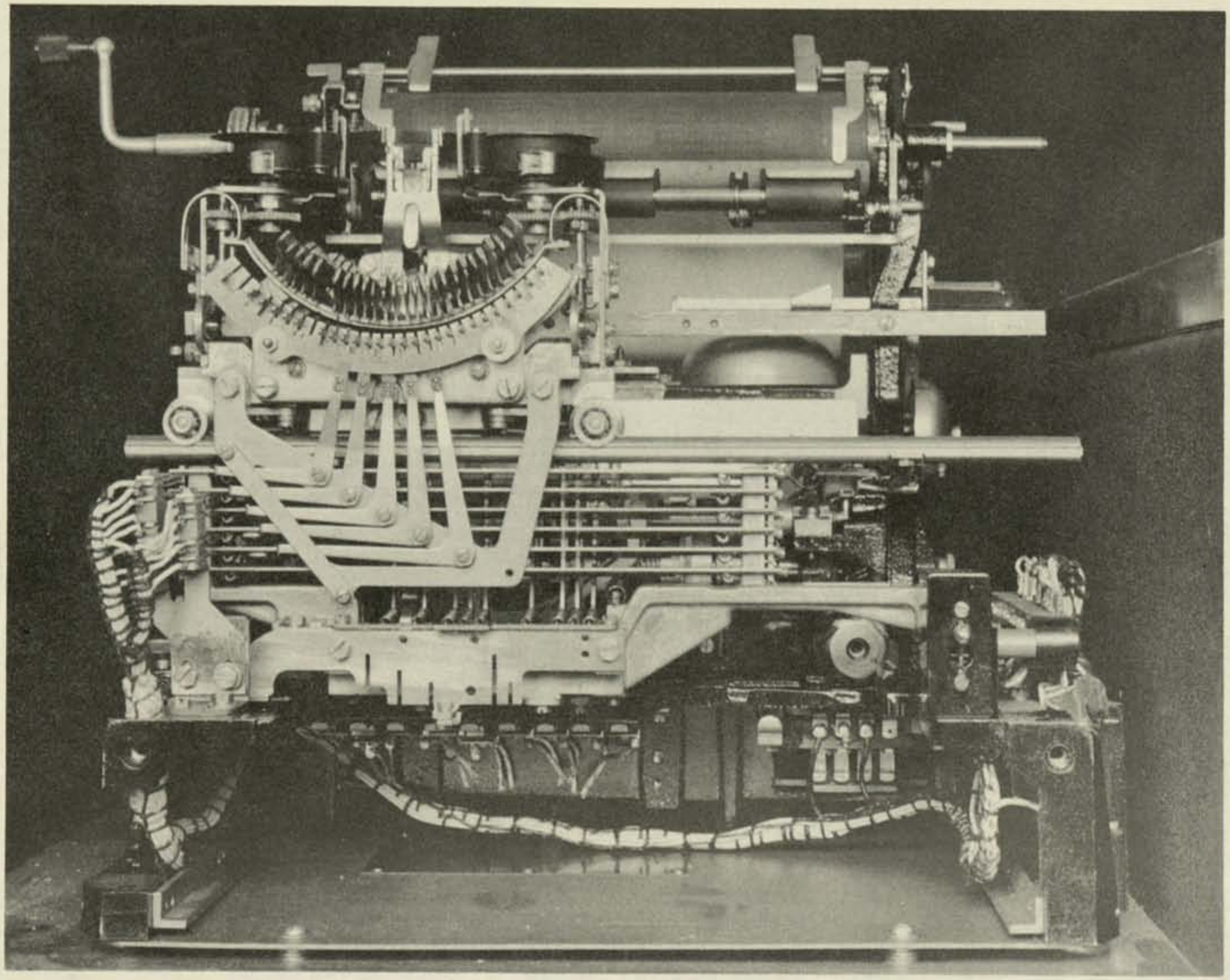

Plate XXXI Printer: interior view showing vanes

The first quantity perforated in a tape is usually transferred by the manual controls to the corresponding read register before starting the calculator. In order to read into the machine the next and subsequent values, operation-code 01 is used on the same line of coding as the register out-code (050), feed No. 1, or (051), feed No. 2 (cf. line 17 of Fig. 1.2). This coding transfers the quantity standing in the read register to a transfer register, and initiates the read-in to the machine of the second value on the tape. One and one-half cycles later the operation may be repeated.

The pattern of impulses shown in Fig. 9.1 is that employed by a reading operation initiated on line 5 of the coding form, impulses 9 and 10. This pattern is repeated five times each cycle. Hence a reading operation coded on lines 1, 2, 3, 4, or 5 will start at impulse 11 at which time the start read relay is energized; an operation coded on lines 7, 8, 9, or 10 will start at impulse 23; and so on. In the detailed description of tape-reading which follows, impulse times not containing any operations related to the process will be omitted.

Impulse 9. (a) The out-relay, OB1-OB8, of read register 050 is energized by a circuit through contacts of the out-pyramid relays picked up by the out-code (050) read on line 5 of the coding form.

(b) The in-relay of the transfer register is energized through contacts of the out-pyramid relays.

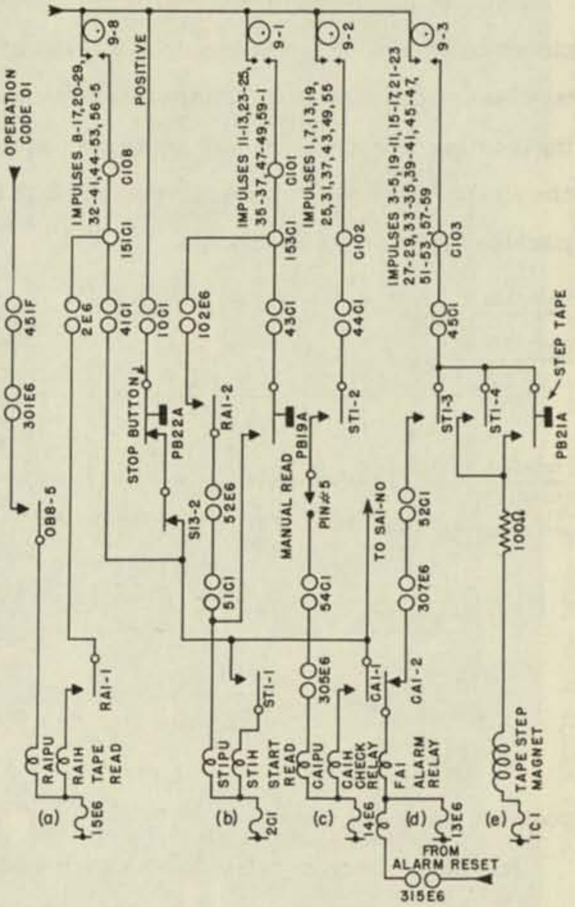

Fig. 9.2 - Tape-reader control relays.

Impulse 10. (a) The quantity standing in read register 050 is read through the normally open contacts of its out-relay to the buss and thence to the transfer register through the normally open contacts of its in-relay.

(b) Operation-code 01 energizes the tape read relay, RA1, through the operation-pyramid and the normally open contact OB8-5, Fig. 9.2a. By virtue of its hold circuit, relay RA1 remains in the energized position throughout the reading operation.

Impulse 11. (a) The start read relay, ST1, is energized through the normally open contact RA1-2, Fig. 9.2b. As may be seen in the figure, relay ST1 also may be energized by the manual read button, PB19A.

Impulse 13. (a) The tape should be in position for the five pin to sense the index hole. The circuit reading through the contact closed by this pin, if the index hole is present, energizes the check relay, CA1, as shown in Fig. 9.2c.

Impulse 15. (a) The alarm relay FA1 is energized, Fig. 9.2d, if the check relay CA1 is not picked up by the circuit of impulse 13 reading the index hole. The alarm indicates that (1) the tape has not been placed correctly in the transmitter, (2) the index hole for the quantity is missing from the tape, or (3) the five pin is not operating properly. Contacts FA1-1 and FA1-2 close circuits energizing the alarm light mounted at the top of the punch and feed panel and the main machine alarm, respectively.

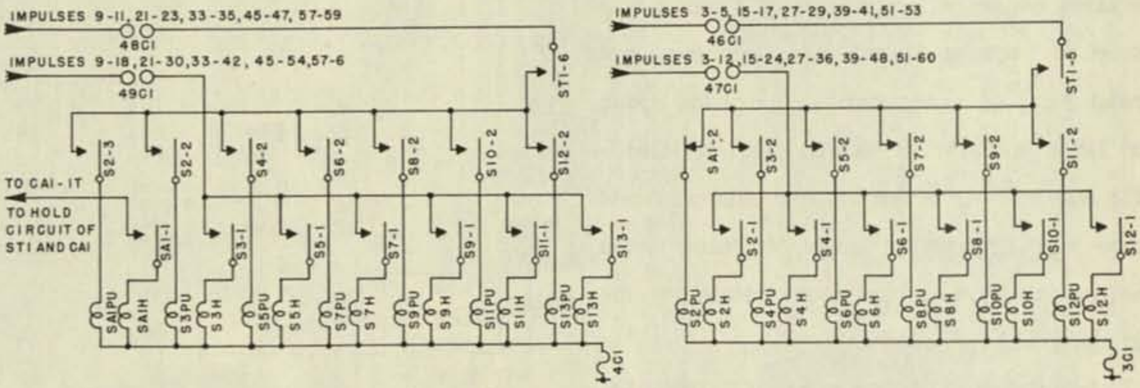

Fig. 9.3 - Register 050, auxiliary in-relays.

(b) The tape step magnet is energized, Fig. 9.2e, stepping the tape to the next columnar position, the sign column.

(c) The auxiliary in-relay, S2, of columns 20 and 16 of read register 050 is energized through a normally closed contact of relay SA1, and remains in this position for a total of nine impulse times. Figure 9.3 shows the circuits energizing the auxiliary in-relays of the several columns of the read register.

Impulse 17. (a) The read register is reset by an impulse from cam-controlled contact 9-33 through the normally open contact S2-6 to the reset coils of the read register relays, Fig. 9.4.

Impulse 19. (a) An impulse passes through the contacts closed by the one and two pins if they sense holes in the tape, through the auxiliary in-relay contacts to energize the corresponding read register relays. Figure 9.4 shows the circuit for successive readings made by the one pin. The circuits for the remaining pins are similar to that shown in Fig. 9.4.

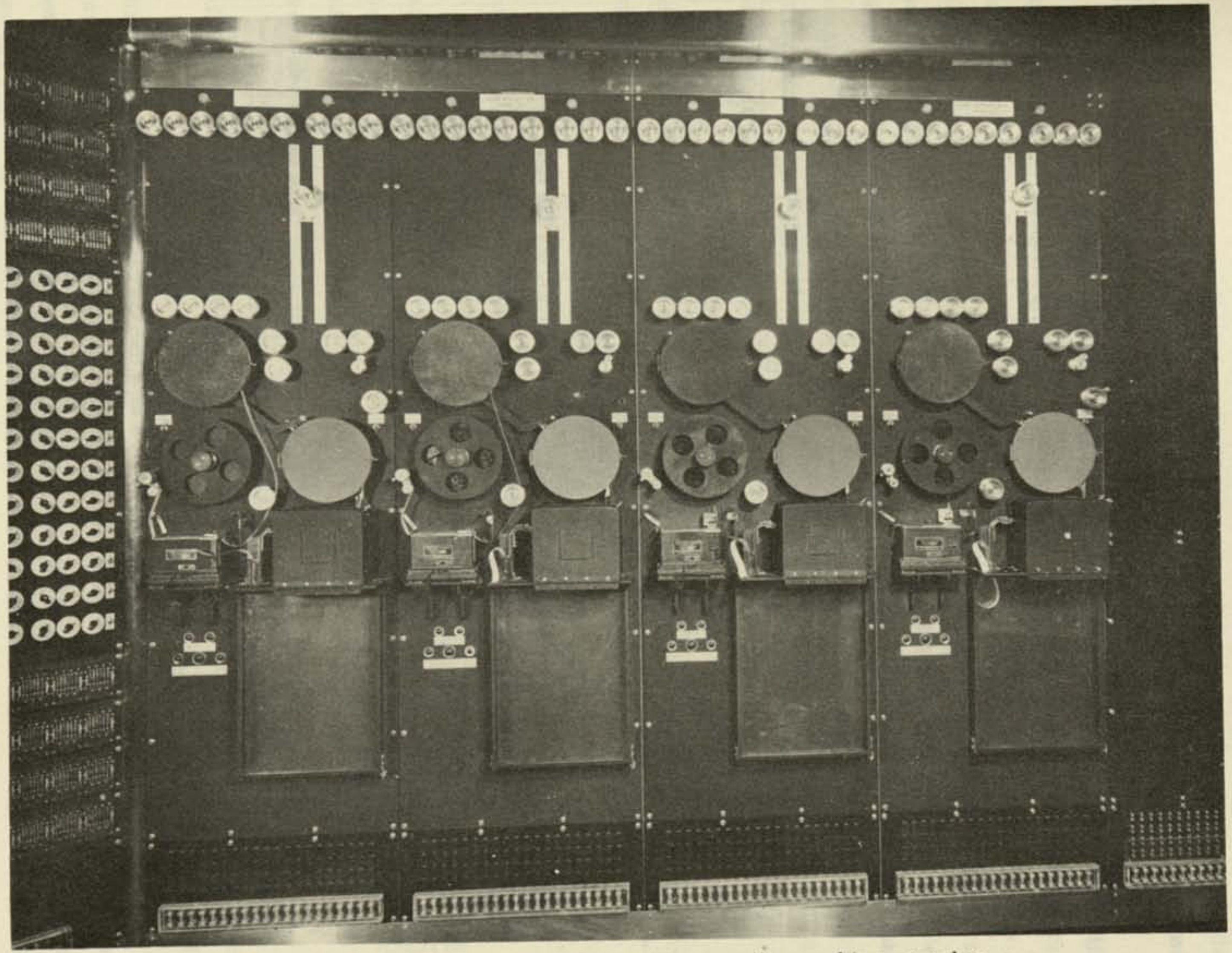

Plate XXXII Right Wing of Calculator: tape-readers and tape-punches

Impulse 21. (a) The tape step magnet is energized, advancing the tape and bringing the exponent column into reading position.

(b) Relay SA1 is energized by a circuit through contact S2-3, Fig. 9.3, opening the pick-up circuit of auxiliary in-relay S2 during the remainder of the reading operation.

(c) The auxiliary in-relay, S3, of the exponent column of read register 050 is energized by a circuit through the normally open contact S2-2, Fig. 9.3.

Impulses 23-80. The pattern of impulses energizing an in-relay, reading through the pins to the corresponding register relays, and stepping the tape to the next columnar position is repeated ten times thus reading the value of the exponent and the digits in machine columns 10, 9, . . . , 3, 2.

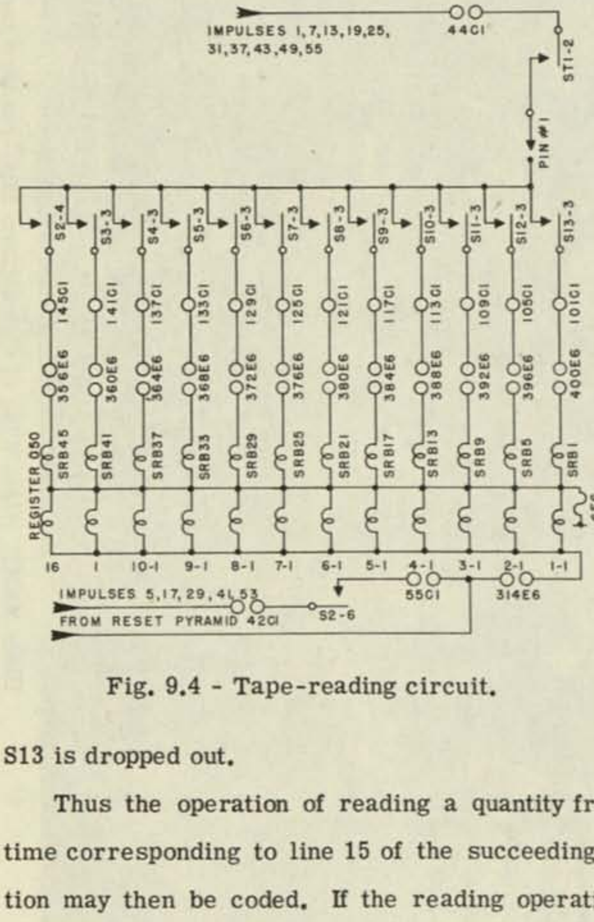

Fig. 9.4 - Tape-reading circuit.

Impulse 81. (a) The in-relay, S13, of column 1 is energized and remains in this position until impulse 90.

Impulse 85. (a) The digit in column 1 is read and the corresponding read register relays are energized, Fig. 9.4.

Impulse 87. (a) The tape step magnet is energized advancing the index hole of the next quantity into reading position.

Impulse 89. (a) The cam-controlled contact 9-8, Fig. 9.2, opens, interrupting the hold circuits of relays RA1, ST1, CA1, and SA1, returning them to their de-energized positions.

Impulse 90. (a) The auxiliary in-relay S13 is dropped out.

Thus the operation of reading a quantity from a tape into the calculator is completed at a time corresponding to line 15 of the succeeding cycle of coding, and the next reading operation may then be coded. If the reading operation had been coded on line 1, 2, 3, or 4 of the cycle, it would have terminated at this same time. Therefore it is necessary to allow one and one-half cycles between the coding of two successive reading operations.

Each of the tape punches is equipped with six punch and die units, one of which punches the tape sprocket holes. The remaining five perforate the tape as directed by the digits standing in the punch register. The several parts of the tape punch are operated by solenoids. Five of these control the positioning of the punch and die units perforating the coded quantities in the tape and are called selector magnets. A sixth solenoid supplies the energy required to punch the tape and advance the sprocket drive.

In order to punch a quantity into a tape, a read-in to register 052, punch No. 1, or 053, punch No. 2, is accompanied by operation-code 01 on the same line of coding. Punching operations must be spaced at intervals of one and one-half seconds.

The timing diagram, Fig. 9.5, shows the impulses supplied to the punch by the cam-controlled contacts. As in the case of the read unit, this pattern of impulses is repeated five times during each cycle starting at impulses 1, 13, 25, 37, and 49. The figure shows the timing of a punching operation coded on line 28 of the coding form. The same impulse times also apply to punching operations coded on lines 29 or 30.

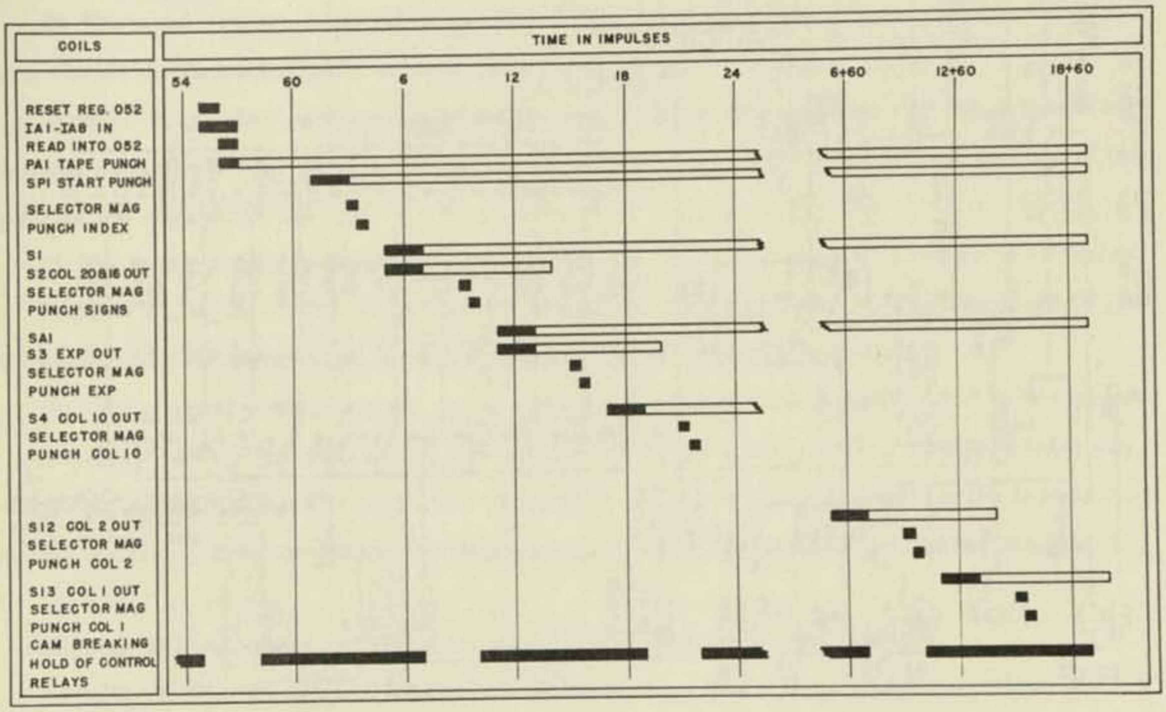

Fig. 9.5 - Tape-punch timing diagram.

In the following detailed description, only those impulse times related to the punching operation will be discussed.

Impulse 55. (a) An impulse passes through the reset-pyramid defined by the in-code (052) read on line 28 of the coding form to reset the punch register 052.

(b) The in-relay, IA1-IA8, of punch register 052 is energized by a circuit through the in-pyramid. This circuit passes through a contact (closed when the switch is on) of the punch cut-off switch, mounted on the operator's table, Plate XXXV. This manual control is used to eliminate punching operations during a rerun procedure.

(c) A circuit through an in-pyramid contact energizes the out-relay of the transfer register.

Impulse 56. (a) The quantity in the transfer register is read into punch register 052 through contacts of the transfer register out-relay to the buss, through contacts of the punch register in-relay to the coils of the register relays.

(b) The tape punch relay, PA1, is energized by a circuit through contacts of the operation-pyramid positioned by the reading of the operation-code 01, Fig. 9.6a.

Impulse 1. (a) A circuit is closed by contact PA1-2 normally open to energize the start punch relay, SP1, Fig. 9.6b. The push button, PB18A, connected in parallel with PA1-2, also may energize the start punch relay, Fig. 9.6b.

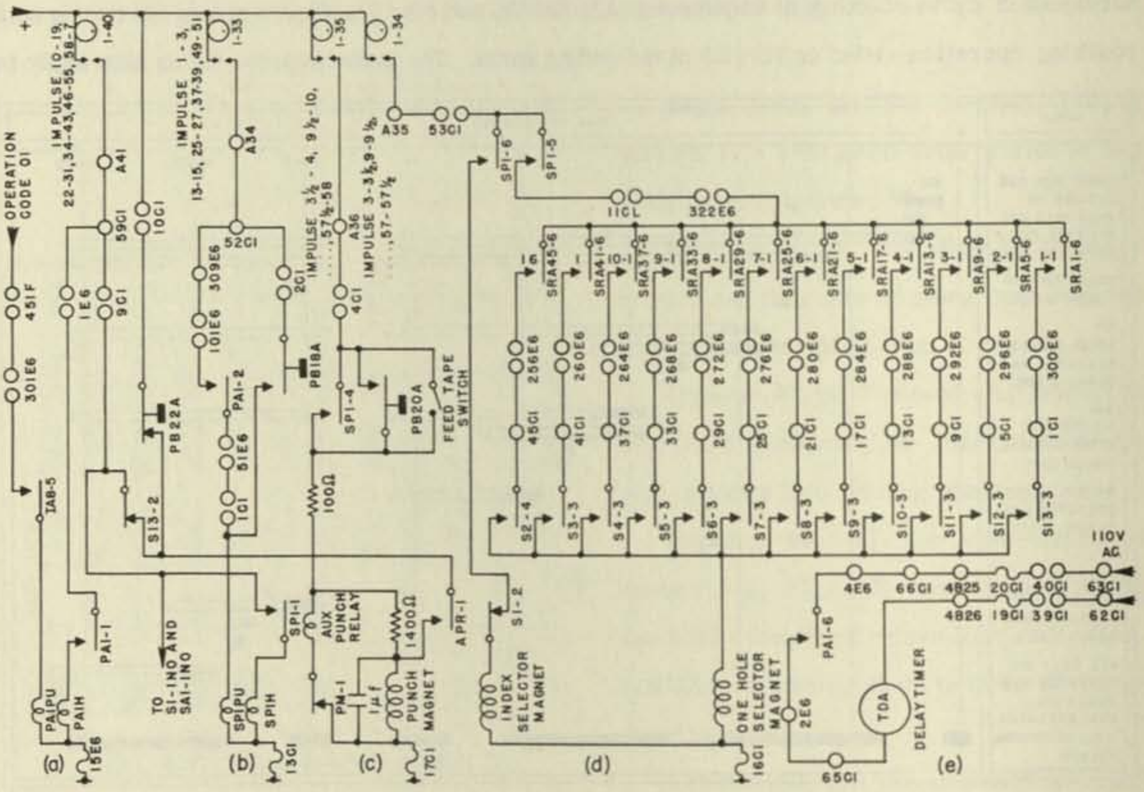

Fig. 9.6 - Tape-punch control circuits.

(b) Contact PA1-6 closes a circuit to start the delay timer, Fig. 9.6e.

Impulse 3. (a) The selector magnet controlling the five punch block is energized, Fig. 9.6d, and the punch block moved into position to perforate the index hole.

(b) A half impulse is supplied through contact SP1-4 to energize the auxiliary punch relay, Fig. 9.6c. A contact of this relay, APR-1, closes a circuit from the positive side of the line to the punch magnet, Fig. 9.6c. The index hole is punched in the tape. The operation of the punch opens the normally closed contact PM-1, dropping out the auxiliary punch relay and hence the punch magnet. As the armature returns, the motion is transferred mechanically to step the tape into position for the next punching operation. A push button, PB20A, is connected in parallel with the contact SP1-4 and thus may be used to step the tape manually and punch the sprocket holes. A toggle switch mounted inside the cover of the punch as required in telegraph practice is connected similarly and serves the same purpose.

Impulse 5. (a) The index relay S1 is energized by a circuit through a normally closed contact of relay SA1, similar to the circuit of Fig. 9.4 energizing the auxiliary in-relays of the read register. This opens the normally closed contact S1-2 in the circuit to the index hole selector magnet, Fig. 9.6d.

(b) The auxiliary out-relay S2 of columns 20 and 16 of the punch register is also energized by a circuit through a normally closed contact of relay SA1, Fig. 9.4.

Impulse 9. (a) The selector magnets corresponding to the one and two punch blocks are energized and the punch blocks moved into position if the sign of the exponent and the sign of the quantity are negative, Fig. 9.6d.

(b) The punch magnet is energized, the required holes are punched, and the tape is advanced.

Impulse 11. (a) Relay SA1 is energized opening the pick-up circuit of the index relay S1 and of the auxiliary out-relay S2 during the remainder of the punching operation.

(b) The auxiliary out-relay, S3, of the exponent column of punch register 052 is energized.

Impulses 15-70. The pattern of operations energizing a punch register auxiliary out-relay, energizing selector magnets to position punch blocks, punching, and advancing the tape is repeated ten times thus recording the exponent and the digits standing in machine columns 10, 9, ..., 3, 2.

Impulse 71. (a) The auxiliary out-relay S13 of column 1 is energized.

Impulse 75. (a) The punch blocks are positioned by the column 1 register relays and the selector magnets.

(b) The perforations representing the digit in column 1 are punched, and tape is advanced.

Impulse 79. (a) The hold circuits of relays PA1, ST1, S1, and SA1 are opened by the normally closed contact S13-2, protected by cam-controlled contact 1-40.

Impulse 80. (a) The auxiliary out-relay S13 is de-energized completing the punching operation.

(b) If the punching operation is not completed, a contact TDA-1 of the delay timer is closed completing a circuit to energize the punch alarm relay DA1. Contact DA1-1 closes a circuit to energize the main machine alarm relays, Fig. 6.34, and stop the calculator.

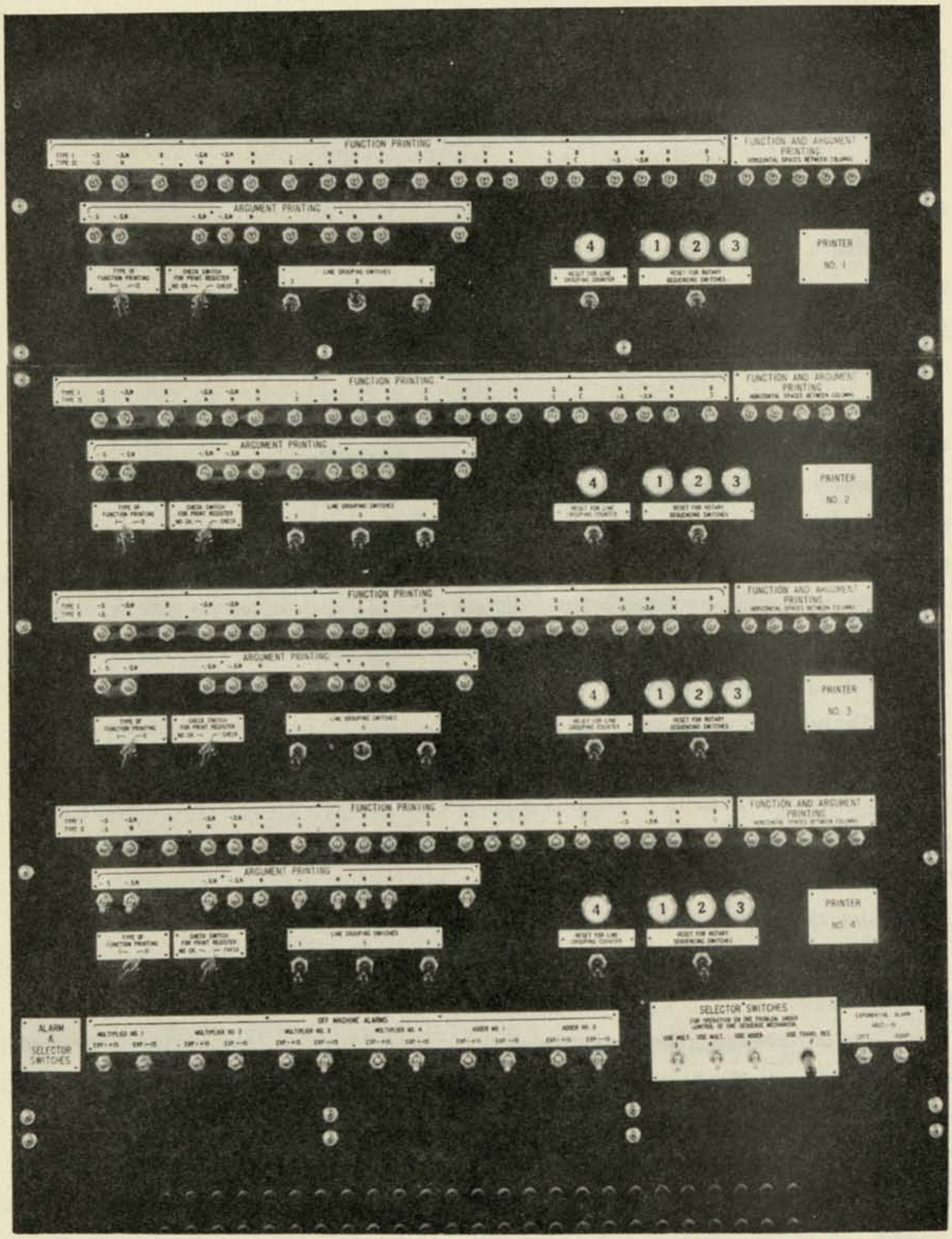

Plate XXXIII Lower Portion of Main Control Panel

Thus the operation of punching a quantity in a tape is completed at a time corresponding to line 10 of the next succeeding cycle of coding, and it is evident that one and one-half seconds must elapse between successive punching operations.

Two printers are provided on each side of the calculator for the permanent recording of computed results. Each printer is controlled by a print-input register, a print register, and associated switches. The in- and out-codes of print-input registers No. 1 and No. 2, on the left side of the machine, are (054) and (055), respectively. If these in-codes are accompanied by the proper operation-code on the same line of coding, a printing operation is initiated. In the absence of an operation-code, the print-input registers function as normal storage registers. The print registers are not under code control, but automatically record the quantity to be printed.

Two styles of printing are provided, each employing not more than ten digits to represent a functional value (excluding exponents). Type I printing records quantities in the usual form; for example, -0.002 684 013. However the wiring of the machine prohibits the use of type I printing when the exponent of the quantity is greater than +3. The permissible range of values is

$$0.000\ 000\ 000 \leq |x| \leq 9999.999\ 999.$$

Quantities falling outside this range must be printed in type II style, the semi-logarithmic form used within the calculator itself. In this case the exponent of ten is printed in parentheses following the ten decimal digits of the quantity; for example, -2.684 013 497 (-3). Arguments are printed only in type I style and must lie in the range

$$0.0000 \leq |x| \leq 9999.9999.$$

Different codes and controls are provided for the printing of arguments and for the printing of functions since in

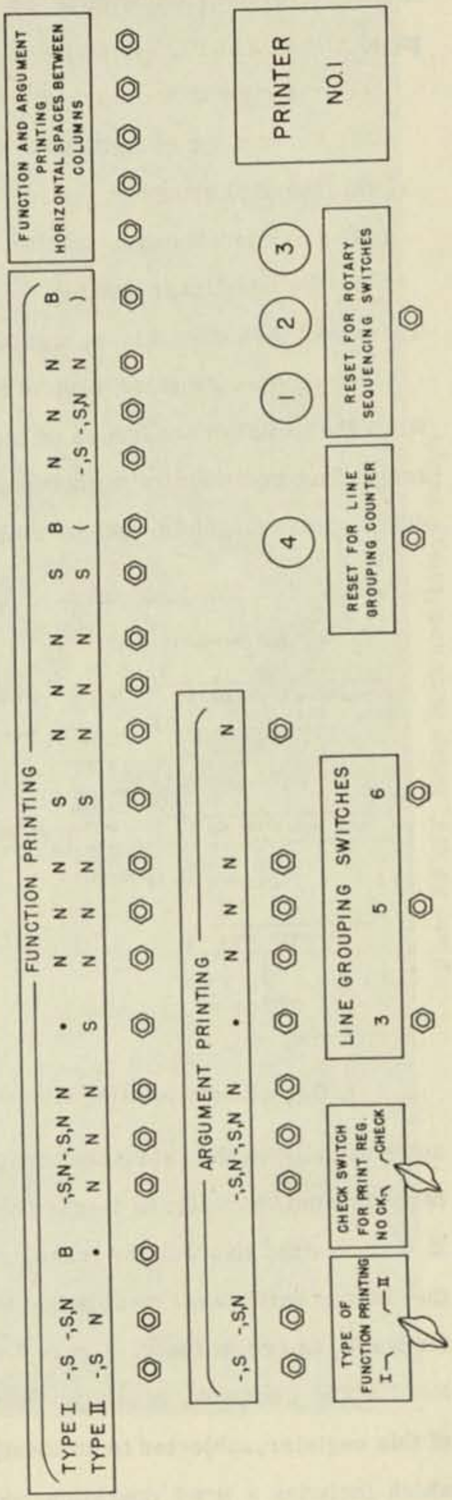

Fig. 9.7 - Main control panel, Printer No. 1 switches.

argument printing zeros must be omitted to the right. Switches located on the main control panel, Plate XXXIII, determine for each printer:

(1) the style of printing, type I or type II,

(2) the number of digits to be printed in both function and argument,

(3) the digit grouping,

(4) the intercolumnar spacing, and

(5) the interlinear spacing.

These switches offer a large measure of freedom in the typography of the printed page.

Twenty-five switches control function printing and ten control argument printing, Fig. 9.7. When the switches are turned on they permit characters to be printed under control of the corresponding positions of a rotary switch. The switches provide minus signs, spaces, decimal digits, decimal points, and parentheses. When the switches are turned off, the corresponding positions of the rotary switch, Plate XXXIV, become ineffective. During type I printing, the switches controlling the type II decimal point and parentheses must be in the off position. The vertical spacing is controlled by the line grouping switches supplying an extra line feed (accompanying a coded line feed) every third, fifth, or sixth line. If other line groupings are desired, the extra line feeds must be coded explicitly.

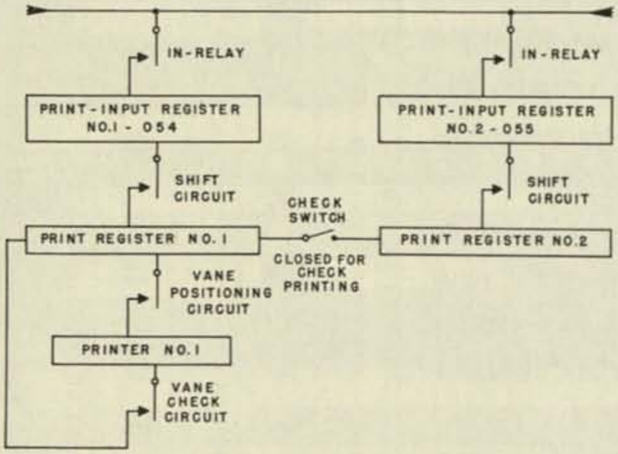

Fig. 9.8 - Check printing number transfers.

Every printing operation is checked automatically to the extent that the mechanical positioning of the vanes and hence the selection of the printed character is checked against the digit indicated by the relays in the print register. If it is desired to check the transfer of the quantity into the print register, the check switch on the main control panel must be set to "check". Print register No. 1 is checked by print register No. 2, and conversely. Figure 9.8 shows the circuits required for check printing on printer No. 1. The computed result is first delivered to print-input register 055. It is then read out of this register, subjected to an identity check, and delivered to register 054 by a line of coding which includes a print operation-code. Thus the quantity to be printed is recorded in both print-input registers. From these registers it is transferred to the two corresponding print registers. The latter are then checked, one against the other, before the printing operation

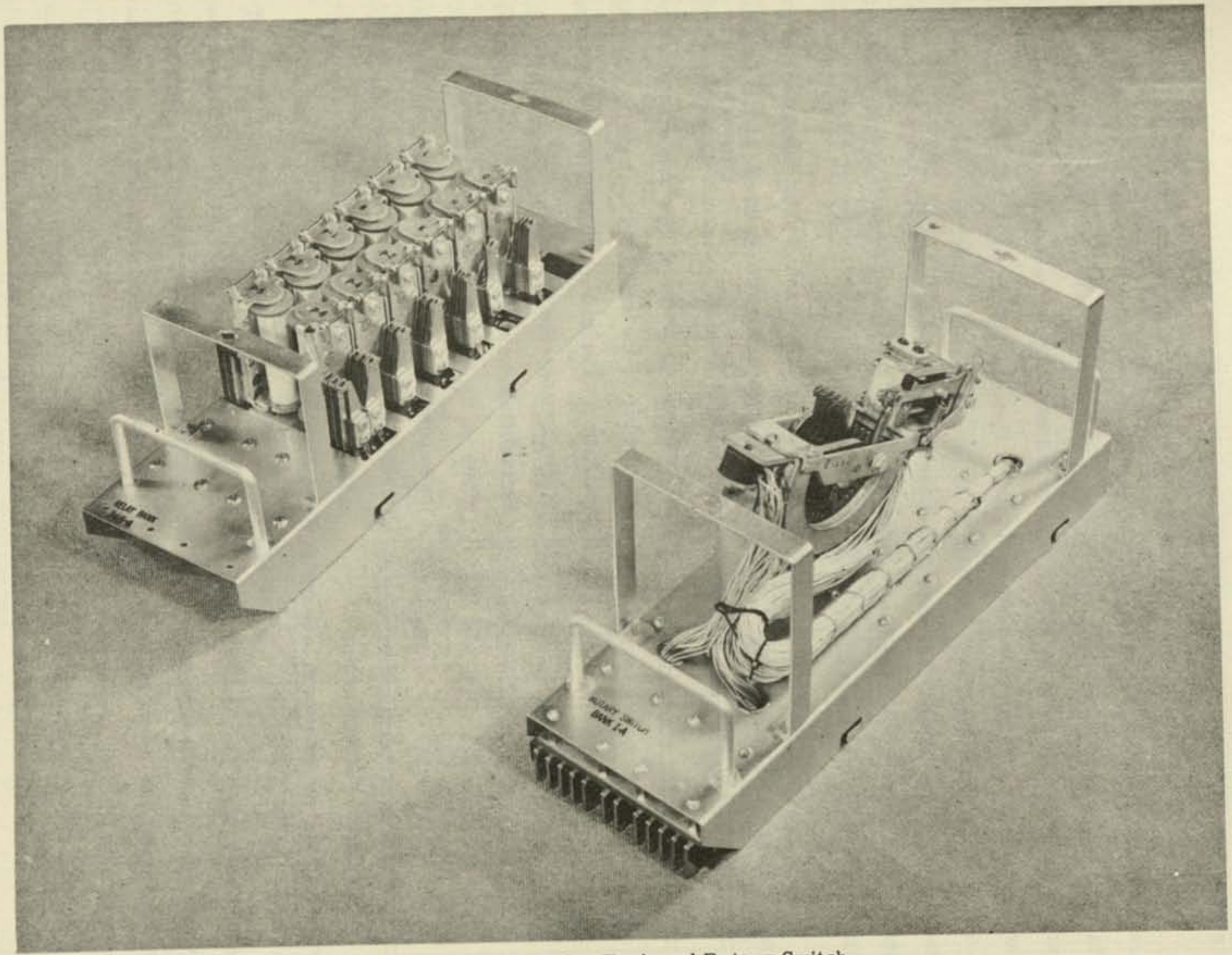

Plate XXXIV Relay Bank and Rotary Switch is initiated.

Two pilot lights are provided for check printing, one indicating a discrepancy between print registers No. 1 and No. 2, and the other a discrepancy between print registers No. 3 and No. 4. In addition there are four lights, one assigned to each printer, which are energized if the vanes are positioned incorrectly or if the quantity read into the print register for argument printing or type I function printing has an exponent greater than +3. If any one of these checks fails, the corresponding lamp is lighted, the main machine alarm is energized, and both the printer and the calculator are stopped. It should be noted that if the positions of the vanes fail to check, the printer will print the incorrect character and the next succeeding character before the alarm circuits stop the operation.

In order to initiate a printing operation, a quantity is read into a print-input register by a line of coding which includes one of the six print operation-codes. Codes 02 and 05 for argument and function printing, respectively, yield from one to five spaces between columns depending upon the setting of the toggle switches on the main control panel. The codes 03 and 06 supply a carriage return and one line feed following the printing of an argument or a function, respectively. However, if one of the line grouping switches, Fig. 9.7, is in the on position, two line feeds will be supplied every third, fifth, or sixth line. For argument printing and function printing, codes 04 and 07, respectively, provide a carriage return and two, and only two, line feeds.

x	*f(x)*	*g(x)*
0.00	1.000 000	0.000 000
0.01	0.999 986	0.010 009
0.02	0.999 920	0.020 018
0.03	0.999 831	0.030 027
0.04	0.999 711	0.040 037
0.05	0.999 584	0.050 046
0.06	0.999 427	0.060 056
0.07	0.999 265	0.070 066
0.08	0.999 098	0.080 077
0.09	0.998 849	0.090 087

Fig. 9.9 - Function printing.

Operation-codes 10, 11, 12, and 13 supply eight line feeds to printers No. 1, 2, 3, and 4, respectively, while the line grouping counters are reset by codes 14, 15, 16, and 17, respectively. Since these two operations are independent of the transfer buss, their codes may be entered on any line of coding. Their purpose is to separate pages of computed data and to start the next page with the proper line grouping.

The operations indicated by codes 14 through 17, the reset of the line grouping counters, requires one cycle for its completion. The time required for the remaining operations initiated by the print codes is standardized at slightly less than four seconds. Thus one printing operation may be performed by each printer every four seconds. However, if the check switch of a printer is in the check position, the controls of the corresponding print register are also in use and may not be employed for printing during the interval. Hence, if a check printing switch of

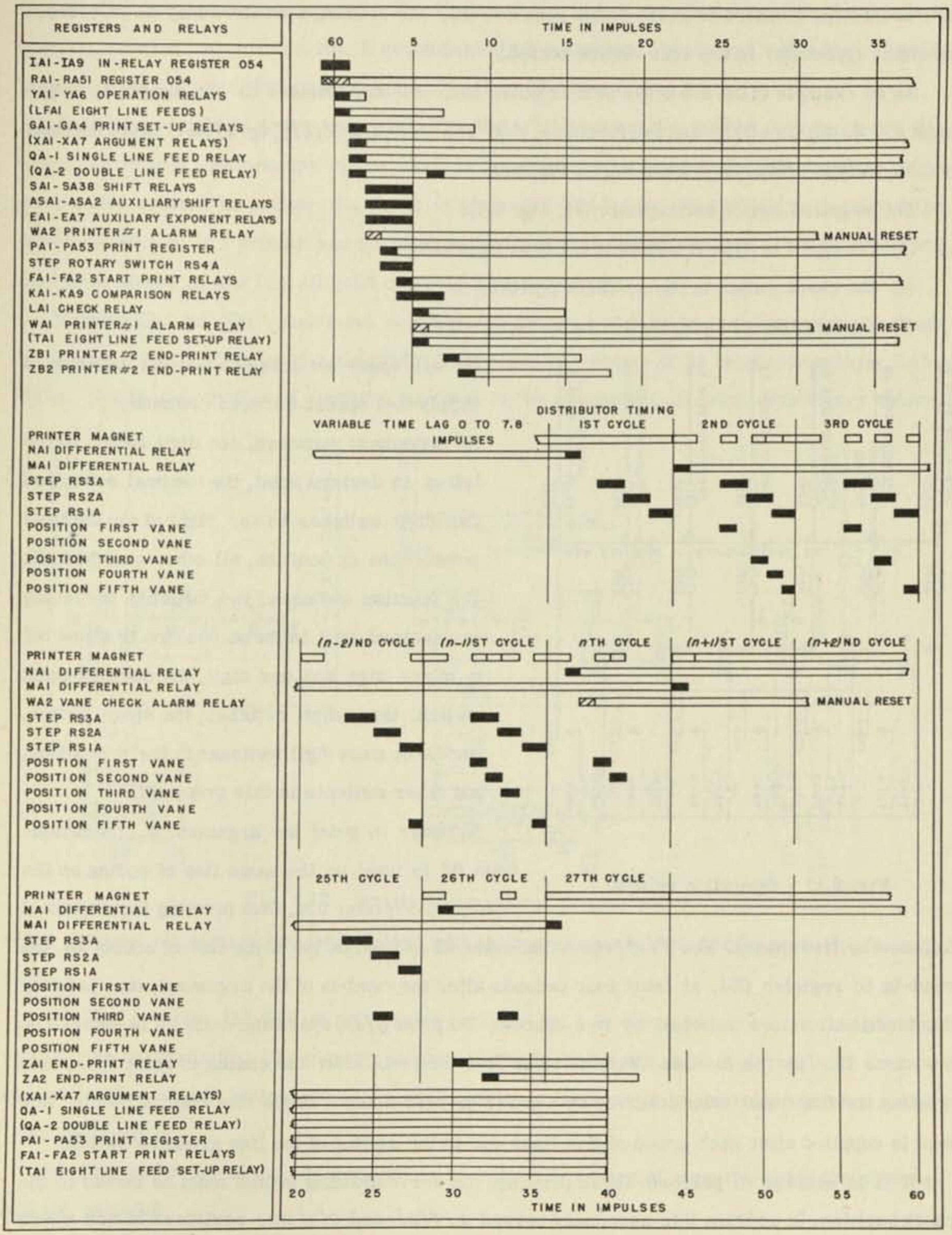

Fig. 9.10 - Printer timing diagram.

two associated printers is in the check position, only one printing operation may be performed on either typewriter in any four second period.

As an example of the use of the printer codes and controls, consider the printing of an argument $x, 0 \leq x \leq 1$, $\Delta x = 0.01$, and two functions, $f(x)$ and $g(x), 0 \leq |f(x)|, |g(x)| \leq 1$, to six decimal places, in type I form on printer No. 1, Fig. 9.9.

The required switch settings are (cf. Fig. 9.7):

(1) the type I or type II switch in the type I position;

(2) the check switch in the no check position;

(3) the five line grouping switch in the on position;

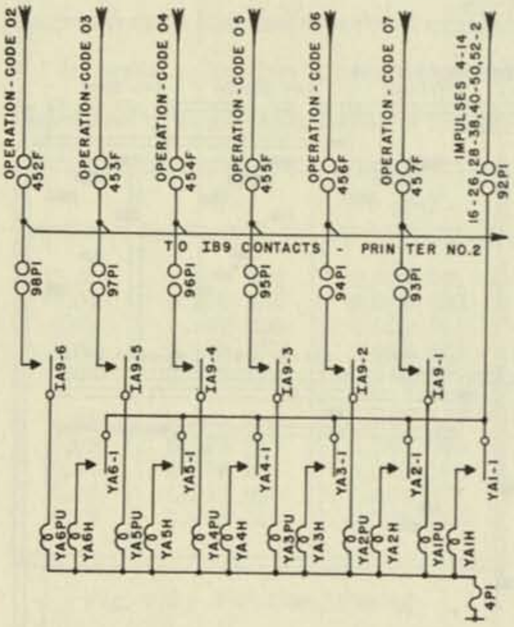

Fig. 9.11 - Operation relays.

(4) all space switches in the on position to supply five spaces between columns;

(5) argument switches, one digit switch to the left of the decimal point, the decimal point, and two digit switches to the right of the decimal point in the on position, all other switches off;

(6) function switches, two switches preceding the decimal point in the on position to allow for a minus sign and one digit, the decimal point switch, three digit switches, the space switch, and three more digit switches in the on position, all other switches in this group off.

In order to print the argument x, operation-code 02 is used on the same line of coding as the read-in to register 054, thus printing the argument followed by five spaces. For $f(x)$, operation-code 05 is used on the same line of coding as the read-in to register 054, at least four seconds after the read-in of the argument, thus printing the functional values followed by five spaces. To print $g(x)$, operation-code 06 is entered on the same line as the in-code (054) at least four seconds after the coding to print $f(x)$, thus printing the functional value followed by a carriage return and a single line feed. A double line feed is supplied after each group of five lines due to the setting of the line grouping switch.

If it is desired to perform check printing, the corresponding switch must be turned to the check position. In addition it is necessary to read x, $f(x)$, and $g(x)$ into register 055 and check them mathematically before transferring them to register 054.

Figure 9.10 shows the timing employed throughout the printer units. This pattern of impulses is repeated five times per second. The timing shown is that required for a "no-check type II function printing" on printer No. 1 accompanied by a carriage return and a line feed; that is, in-code (054) and operation-code 06 entered on line 30 of the coding form.

Only those impulse times concerned with the printing operation will be included in the detailed description. References will be made at the appropriate times to the effects of the other print codes related to printer No. 1. It is presumed that before the calculator is started the direct current to the printer and the alternating current to the printer and distributor motors have been turned on and that all print controls have been reset.

Impulse 59. (a) The print-input register relays are reset by an impulse passing through the reset-pyramid set up by in-code (054). This register consists of 51 latch type relays, RA1-RA51. Due to the number of contacts required in the subsequent circuits, each binary column of the exponent consists of two latch relays with their pick-up and reset coils connected in parallel.

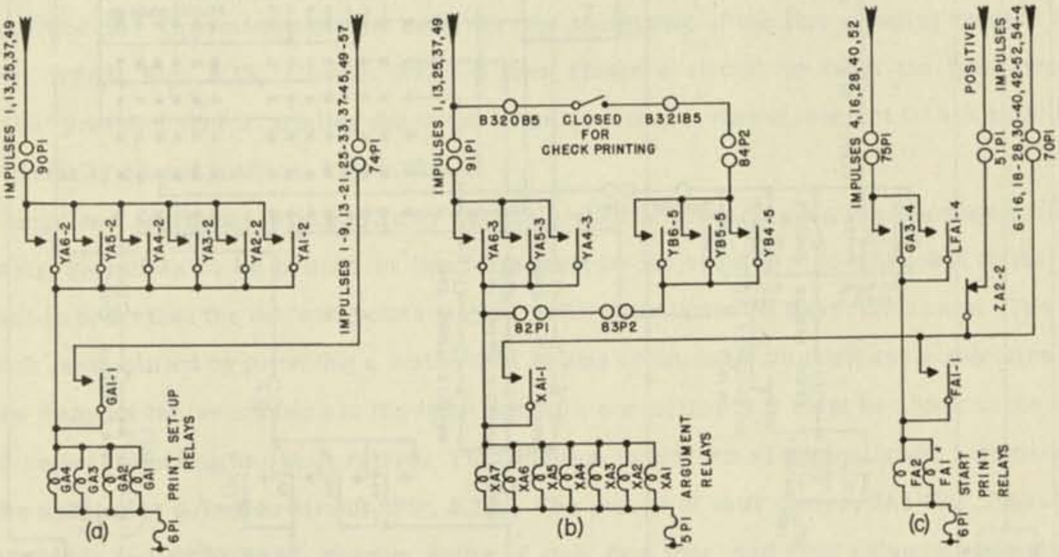

Fig. 9.12 - Preliminary relays, printer No. 1.

(b) The in-relay IA1-IA9 of print-input register No. 1 is energized by an impulse passing through the in-pyramid. The pick-up circuit of the in-relay of a print-input register may be opened by the cut-off switch located on the operator's table or by an energized printer alarm relay (WA1-3NC).

(c) The out-relay of the addition unit is energized by means of circuits within the addition unit (cf. page 79).

Impulse 60. (a) The quantity standing in the sum register is read via the transfer buss into the print-input register.

(b) An impulse through the operation-pyramid set up by operation-code 06 and through an in-relay contact energizes the operation relay YA2, Fig. 9.11.

(c) If eight line feeds had been called for, operation-code 10, relay LFA1 would be energized, Fig. 9.13.

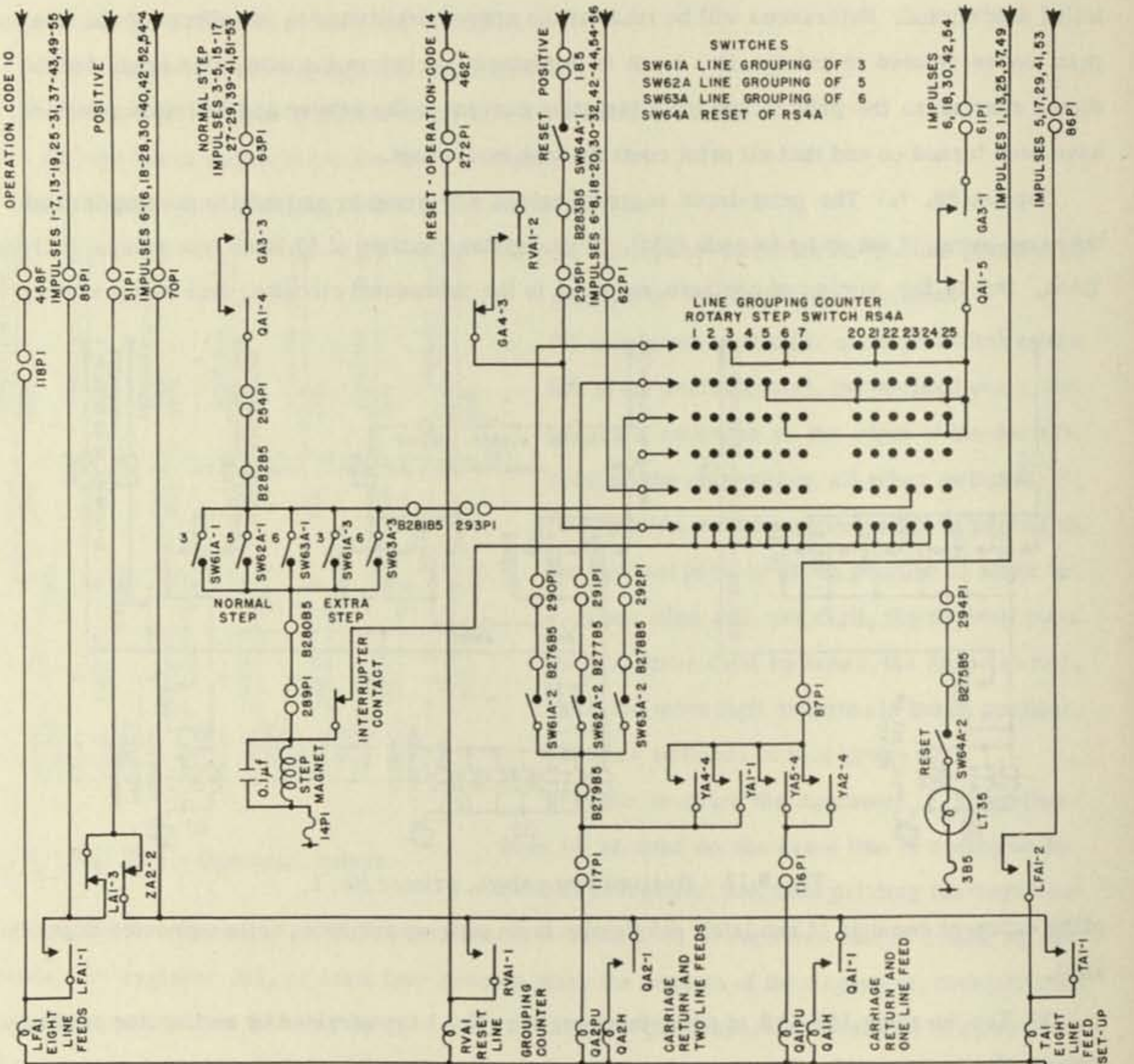

Fig. 9.13 - Line grouping controls.

Impulse 1. (a) The print set-up relays, GA1-GA4, are energized by an impulse passing through a contact of the operation relay, Fig. 9.12a.

(b) If an argument printing had been called for, the argument relays, XA1-XA7, would be energized through the third contact of one of the operation relays YA4-YA6, Fig. 9.12b. If a check printing were being performed, the circuit of printer No. 2 similar to Fig. 9.12b containing a contact of the check printing switch would energize the argument relays, XB1-XB7, through the fifth contact of one of the operation relays, YA4-YA6.

(c) An impulse passing through a contact of the operation relay energizes the single line feed relay, QA1, Fig. 9.13. Contacts of relays, YA2 and YA5, (operation-codes 06 and 03) energize the single line feed relay, QA1, while contacts of relays, YA1 and YA4, (operation-codes 07 and 04) energize the double line feed relay, QA2. The double line feed relay may also be energized by a circuit, Fig. 9.13, completed through the line grouping rotary switch, RS4A, during impulse 6. This rotary switch should be reset manually or by code before starting each new printed page. It may be reset manually by holding the reset switch 4, Fig. 9.7, in the on position until the pilot lamp directly above the switch is lighted. The rotary switch then stands at position 25. Operation-code 14 calls for the energizing of the line grouping counter reset relay, RVA1, Fig. 9.13. Contact RVA1-2 then closes a circuit to reset the line grouping counter provided that a printing operation is not in process; that is, contact GA4-3 must be in the normally closed position, Fig. 9.13.

Impulse 2. (a) Type I printing is only available when the exponent j lies in the range $3 \geq j \geq -9$. Clearly, quantities to be printed in this form must be subjected to a suitable shift to the right or left in order that the decimal points may be vertically aligned on the printed page. The shift circuit is simplified by providing a static shift of nine columns to the right and a selective shift of as many as twelve columns to the left. Hence, a correction of 9 must be added to the exponent before selecting the shift relays. This addition is performed statically and automatically in the shift relay selection circuit, Fig. 9.14a. The groups of shift relays, SA1-SA8, SA9-SA17, SA18-SA28, and SA29-SA37, provide shifts of one, two, four, and eight columns respectively, and in combination, supply all the required shifts from zero to twelve. Since all quantities to be printed must be transferred from the print-input register to the print register through the shift circuit, the eight and four groups of the shift relays are always energized in type II printing. Thus all quantities printed in this style are shifted three columns to the left as regards the printed page. This shift has no influence on the location of the decimal point or on the exponent. Relay, SA38, the shift-off relay, is energized, if during type I printing, $j + 9 > 12$ or $j + 9 < 0$. The opening of the normally closed contacts, SA38-1 and SA38-2, interrupts the reading circuit from the print-input register to the print register thus substituting a positive zero.

(b) The auxiliary shift relays, ASA1-ASA2, are energized by the impulse picking up the shift relays. Their contacts complete the reading circuit.

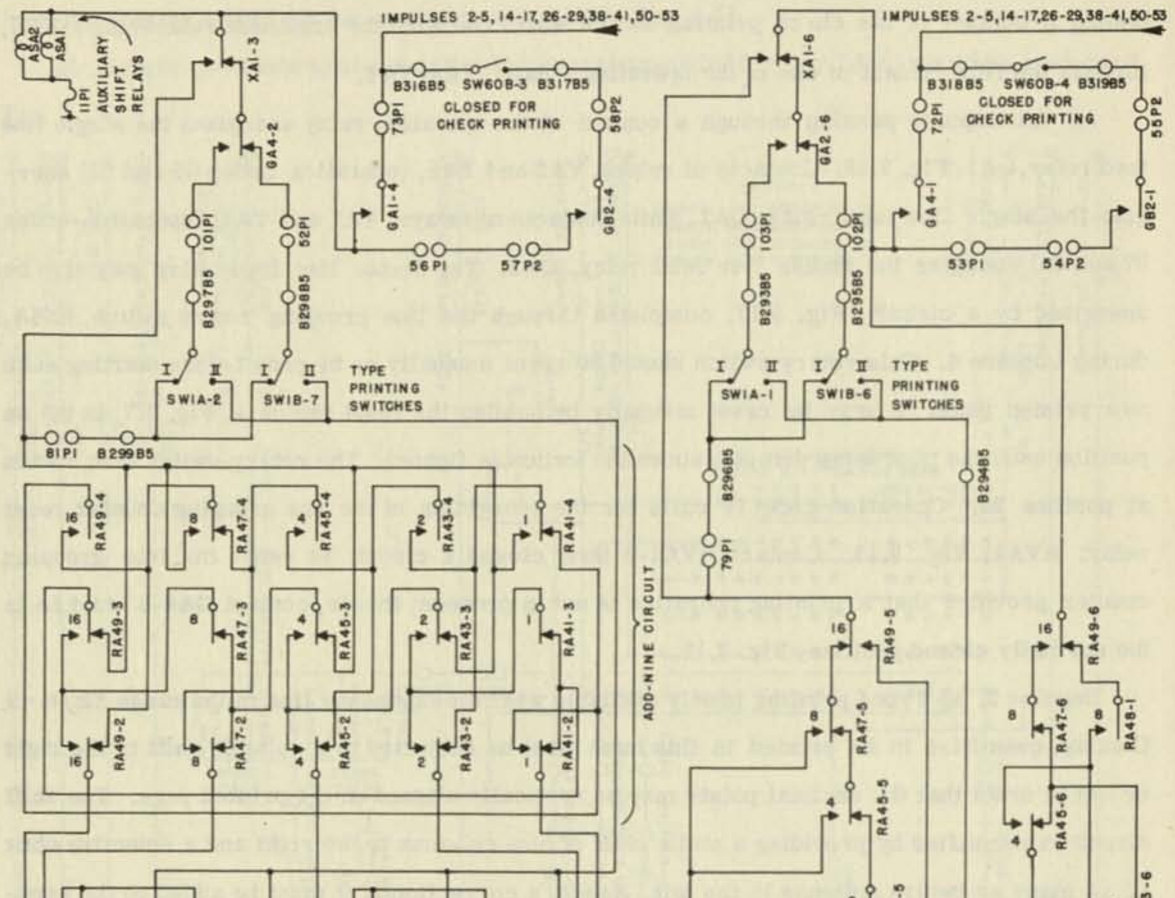

(a) SHIFT RELAYS

(b) AUXILIARY EXPONENT RELAYS

Fig. 9.14 - Add-nine circuit, shift and auxiliary exponent relays.

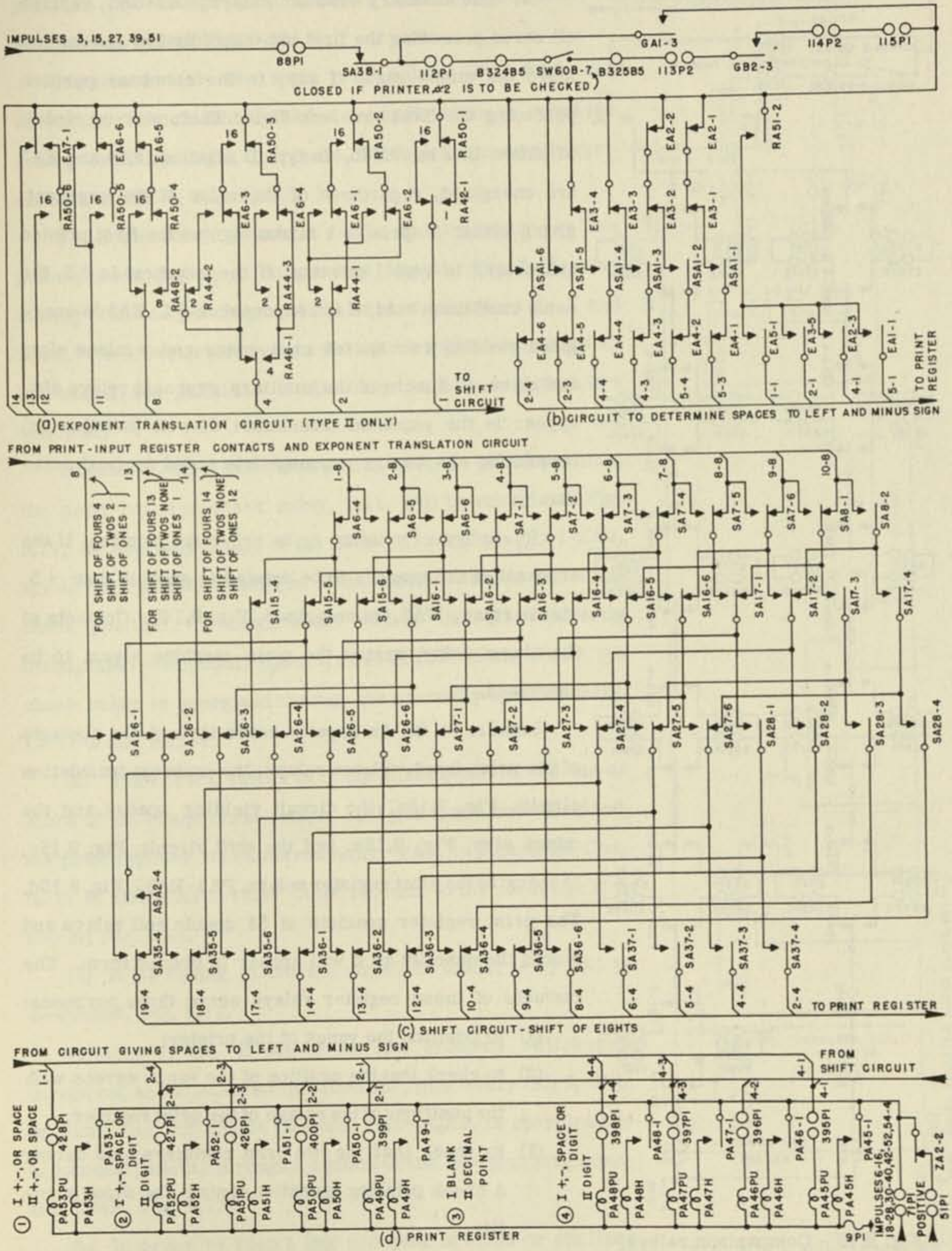

(a) EXPONENT TRANSLATION CIRCUIT (TYPE II ONLY)

(b) CIRCUIT TO DETERMINE SPACES TO LEFT AND MINUS SIGN

(c) SHIFT CIRCUIT - SHIFT OF EIGHTS

(d) PRINT REGISTER

Fig. 9.15 - Circuits reading into print register.

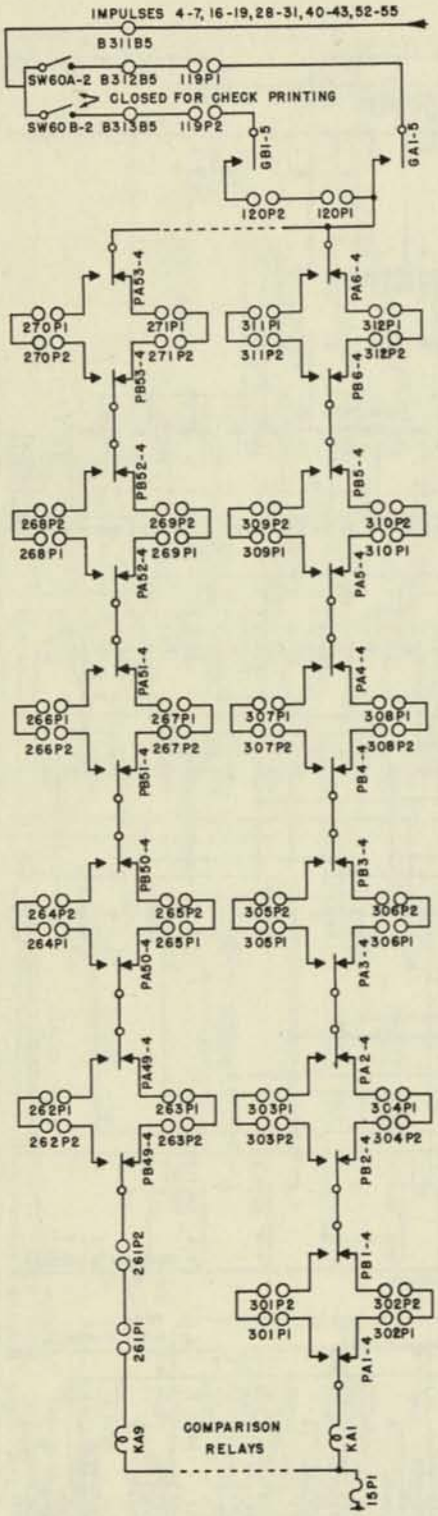

Fig. 9.16 - Comparison relays.

(c) The auxiliary exponent relays, EA1-EA7, replace all zeros preceding the first non-zero digit by spaces and move the minus sign, if any, to the columnar position preceding the first non-zero digit. Their pick-up circuit is shown in Fig. 9.14b. In type II printing, EA4 and EA5 are energized, regardless of the value of the exponent, giving either a space or a minus sign as the first printed character. In type I printing, if the exponent is +3, the same conditions hold; if the exponent is +2, EA3 is energized yielding two spaces or a space and a minus sign; and so on. Contacts of the auxiliary exponent relays also appear in the exponent translation circuit (impulse 3a) translating the binary exponent into coded decimal notation.

(d) In type I printing or in argument printing, if the exponent of the quantity to be printed is greater than +3, alarm relay, WA2, is energized, Fig. 9.14b. Contacts of the alarm relay permit the main machine alarm to be energized.

Impulse 3. (a) An impulse reads through the contacts of the print-input register relays, the exponent translation circuit, Fig. 9.15a, the circuit yielding spaces and the minus sign, Fig. 9.15b, and the shift circuit, Fig. 9.15c, to energize the print register relays, PA1-PA53, Fig. 9.15d. The print register consists of 53 double coil relays and stores the quantity as it will appear in printed form. The contacts of these register relays serve three purposes:

(1) to position the vanes of the printer;

(2) to check that the position of the vanes agrees with the positions of the relays of the print register;

(3) to check that the two print registers used during a check printing operation contain the same quantity.

(b) If one of the line grouping switches is in the on position, the line grouping counter, rotary switch RS4A, is advanced one step, Fig. 9.13.

Impulse 4. (a) The start print-relays, FA1-FA2, are energized through contact GA3-4 normally open, or, when the coding calls for eight line feeds, through the normally open contact, LFA1-4, Fig. 9.12c.

(b) If the check switch is in the check position, an impulse passes through a comparison circuit, Fig. 9.16, consisting of corresponding contacts of print registers No. 1 and No. 2. The comparison relays KA1-KA9 will be energized if, and only if, the positions of all relays in both registers are identical.

Impulse 5. (a) If the check switch is in the check position, the print register check relay, LA1, will be energized, Fig. 9.17, if, and only if, all of the comparison relays, KA1-KA9, are in the energized position. If the check switch is in the no-check position, the check relay will be energized directly through GA1-6 normally open. If eight line feeds are coded, the check relay is energized through the normally open contacts, LFA1-3 and FA2-1.

(b) If the check switch is in the check position and one or more of the comparison relays, KA1-KA9, are not energized, the print register check alarm relay, WA1, is picked up. Contacts of this alarm relay close circuits to the main machine alarm, Fig. 6.34.

(c) If the coding called for eight line feeds, relay TA1 is energized, Fig. 9.13.

Impulse 6. (a) If one of the line grouping switches is turned on, and a line feed is called for, then every third, fifth, or sixth line the double line feed relay, QA2, is energized by an impulse passing through a contact of the line grouping counter, RS4A, Fig. 9.13.

(b) In order to keep a line grouping of three or six lines in phase with the 25 position rotary switch, the line grouping

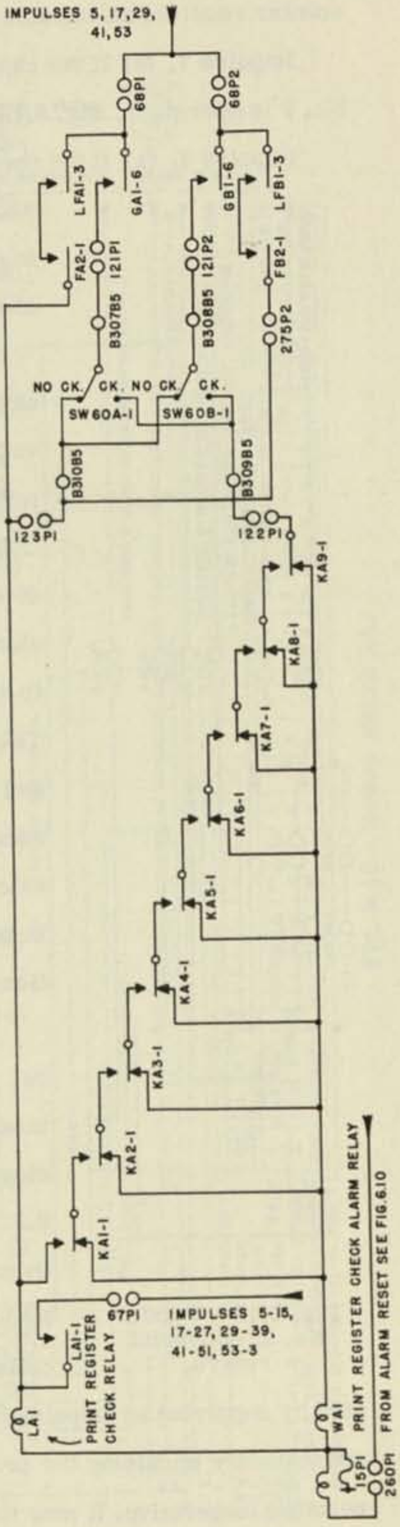

Fig. 9.17 - Print register check circuit.

counter receives an impulse for an extra step at position 23, Fig. 9.13.

Impulse 7. (a) If the check switch is in the check position, end-print relay, ZB1, of printer No. 2 is energized, Fig. 9.18.

Impulse 8. (a) If the check switch is in the check position, end-print relay, ZB2, of printer No. 2 is energized, Fig. 9.18. The two end-print relays open circuits to drop out all the controls of printer No. 2 and free the unit for a no-check printing operation.

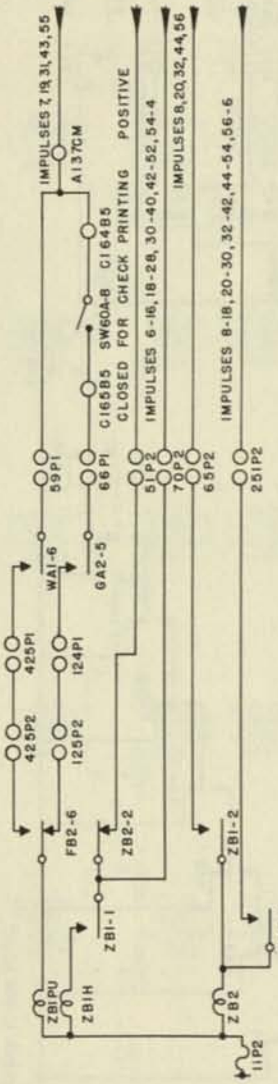

Fig. 9.18 - Printer No. 2, end-print relays.

The distributor now takes over control of the printer. Since the cam unit controlling the preliminary part of the printing operation and the distributor are not necessarily in phase, a time lag of from 0 to 7.8 impulses may be necessary before the first segment of the distributor becomes operative. The distributor consists of two groups of segments, inner and outer, each with an associated common, as shown in Fig. 9.19 and Fig. 9.21. The outer segments supply impulses to the printer magnet to position the vanes and print the character. The inner segments supply impulses to check the positions of the vanes and to step the associated rotary switches. It is presumed that the rotary switches, Plate XXXIV, have been reset before starting the calculator or at the close of the previous printing operation and stand in their home positions; that is, RS3A, RS2A, and RS1A stand at positions 24, 24, and 25 respectively.

When the switches on the operator's table, Plate XXXV, are turned on, direct current is supplied to the printer. The second inner segment of the distributor then supplies an impulse through the normally closed contact NA1-1 to one coil of the differential relay NA1, Fig. 9.21. This coil continues to receive current by virtue of the circuit from the positive side of the line through the normally open contact NA1-2. A differential relay is essentially a double coil relay whose coils are wound in opposite directions. Hence, the relay may be operated by supplying an impulse to either of its coils singly, and be returned to its rest position by subsequently impulsing the second coil. Again, when both coils are energized initially, the relay remains inoperative. It may then be moved to the operate position by de-energizing either coil. Thus relay NA1 will operate when the printers are turned on and will remain in the operate position until the distributors take over control of the printing operation.

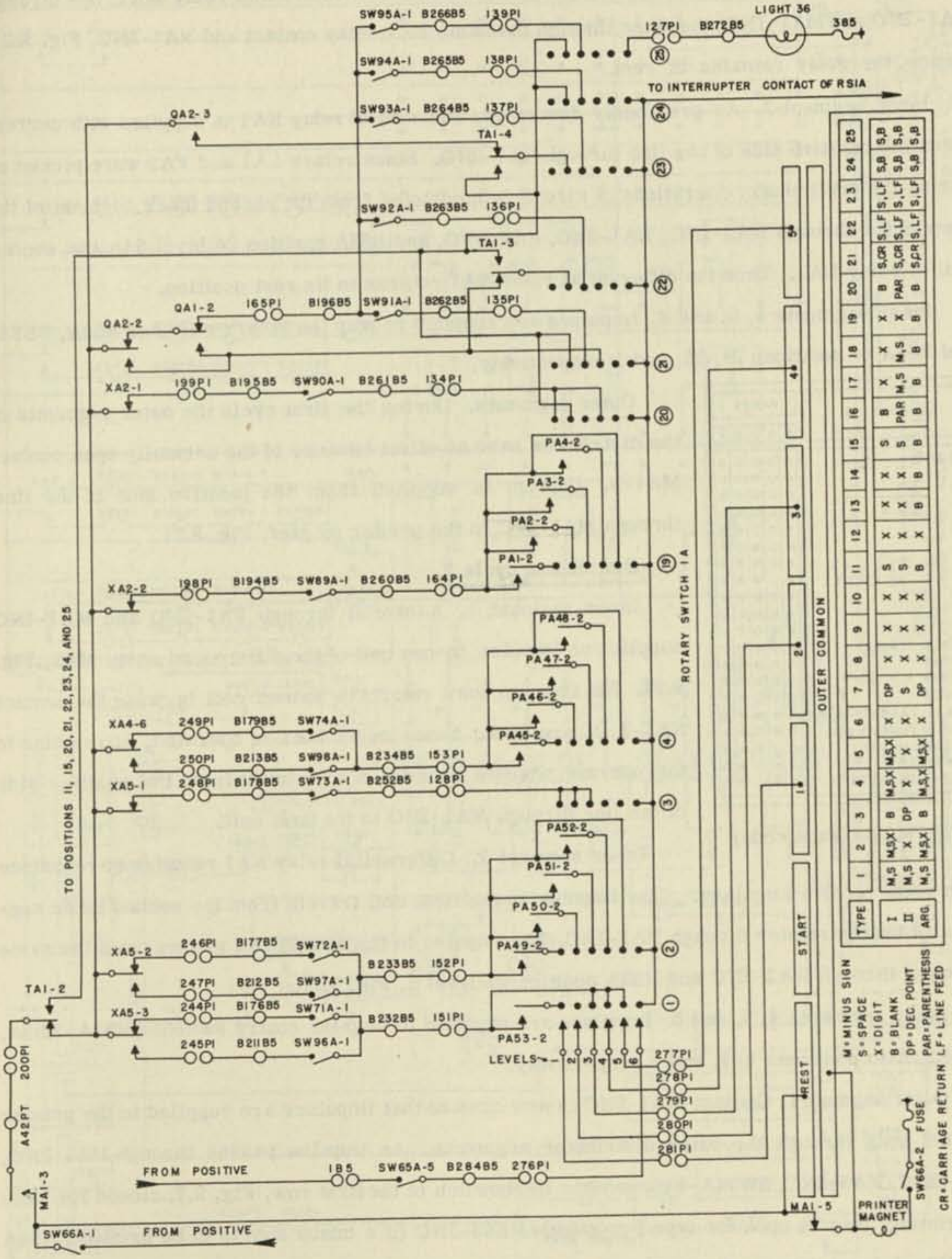

TYPE	1	2	3	4	5	6	7	8	9	10	11	12	13	14	15	16	17	18	19	20	21	22	23	24	25
I	M,S	M,S,X	B	M,S,X	M,S,X	X	DP	X	X	X	S	X	X	X	S	B	X	X	X	B	S,CR	S,LF	S,LF	S,B	S,B
II	M,S	X	DP	X	X	X	S	X	X	X	S	X	X	X	S	PAR	M,S	M,S	X	PAR	S,CR	S,LF	S,LF	S,B	S,B
ARG.	M,S	M,S,X	B	M,S,X	M,S,X	X	DP	X	X	X	B	X	B	B	B	B	B	B	B	B	S,CR	S,LF	S,LF	S,B	S,B

M = MINUS SIGN
S = SPACE
X = DIGIT
B = BLANK
DP = DEC. POINT
PAR = PARENTHESIS
CR = CARRIAGE RETURN
LF = LINE FEED

Fig. 9.19 - Rotary switch 1A.

Distributor cycle 1.

Inner segment 1. Circuits are closed to both coils of the differential relay MA1; one through FA1-2NO and MA1-1NC, the other through the same FA1 relay contact and NA1-3NO, Fig. 9.21. Hence, the relay remains at rest.

Inner segment 2. As previously described, one coil of relay NA1 is supplied with current from the positive side of the line through NA1-2NO. Since relays LA1 and FA2 were picked up during the preliminary operations, a circuit is completed from the second inner segment of the distributor through WA2-3NC, LA1-2NO, FA2-5NO, and RS3A position 24 level 5 to the second coil of relay NA1. Thus the differential relay NA1 returns to its rest position.

Inner segments 4, 5, and 6. Impulses are supplied to step the rotary switches RS3A, RS2A, and RS1A to positions 25, 25, and 1 respectively.

CHARACTER	VANES				
	5	4	3	2	1
BLANK	○	○	○	○	○
0	●	○	○	○	○
1	●	○	○	○	●
2	●	○	○	●	○
3	●	○	○	●	●
4	●	○	●	○	○
5	●	○	●	○	●
6	●	○	●	●	○
7	●	○	●	●	●
8	●	●	○	○	○
9	●	●	○	○	●
SPACE (FALSE)	●	●	●	○	○
SPACE	○	○	●	○	○
MINUS (FALSE)	●	●	●	○	●
MINUS	○	○	○	●	●
(LEFT PARENTHESIS	○	●	●	●	●
)RIGHT PARENTHESIS	○	●	○	○	●
DECIMAL POINT	○	○	●	●	●
LINE FEED	○	○	○	●	○
CARRIAGE RETURN	○	●	○	○	○

Fig. 9.20 - Vane code.

Outer segments. During the first cycle the outer segments of the distributor have no effect because of the normally open contact MA1-3. Current is supplied from the positive side of the line through MA1-5NC to the printer magnet, Fig. 9.21.

Distributor cycle 2.

Inner segment 1. A circuit through FA1-2NO and MA1-1NC supplies an impulse to one coil of the differential relay MA1, Fig. 9.21. No impulse may enter the second coil because the contact NA1-3 is now open, hence relay MA1 is operated. It remains in the operate position because of the circuit from the positive side of the line through MA1-2NO to the first coil.

Inner segment 2. Differential relay NA1 remains at rest since both coils receive impulses. The impulse to the first coil travels from the second inner segment of the distributor through NA1-1NC. The impulse to the second coil passes from the same segment through WA2-3NC and RS3A position 25 level 5, Fig. 9.21.

Inner segments 4, 5, and 6. Impulses are supplied to step the rotary switches RS3A, RS2A, and RS1A to positions 1, 1, and 2 respectively.

Outer segment 1. Contact MA1-5NC is now open so that impulses are supplied to the printer magnet only through the outer distributor segments. An impulse passes through MA1-3NO, TA1-2NC, XA5-3NC, SW74A-1 closed (the first switch of the first row, Fig. 9.7, closed for type II printing, may be open for type I printing), PA53-2NO (if a minus sign is to be printed), RS1A position 1 level 1 to the first outer distributor segment to position the first vane, Fig. 9.19. If relay PA53 is not energized (no minus sign, cf. Fig. 9.15) the first vane is not positioned. If an

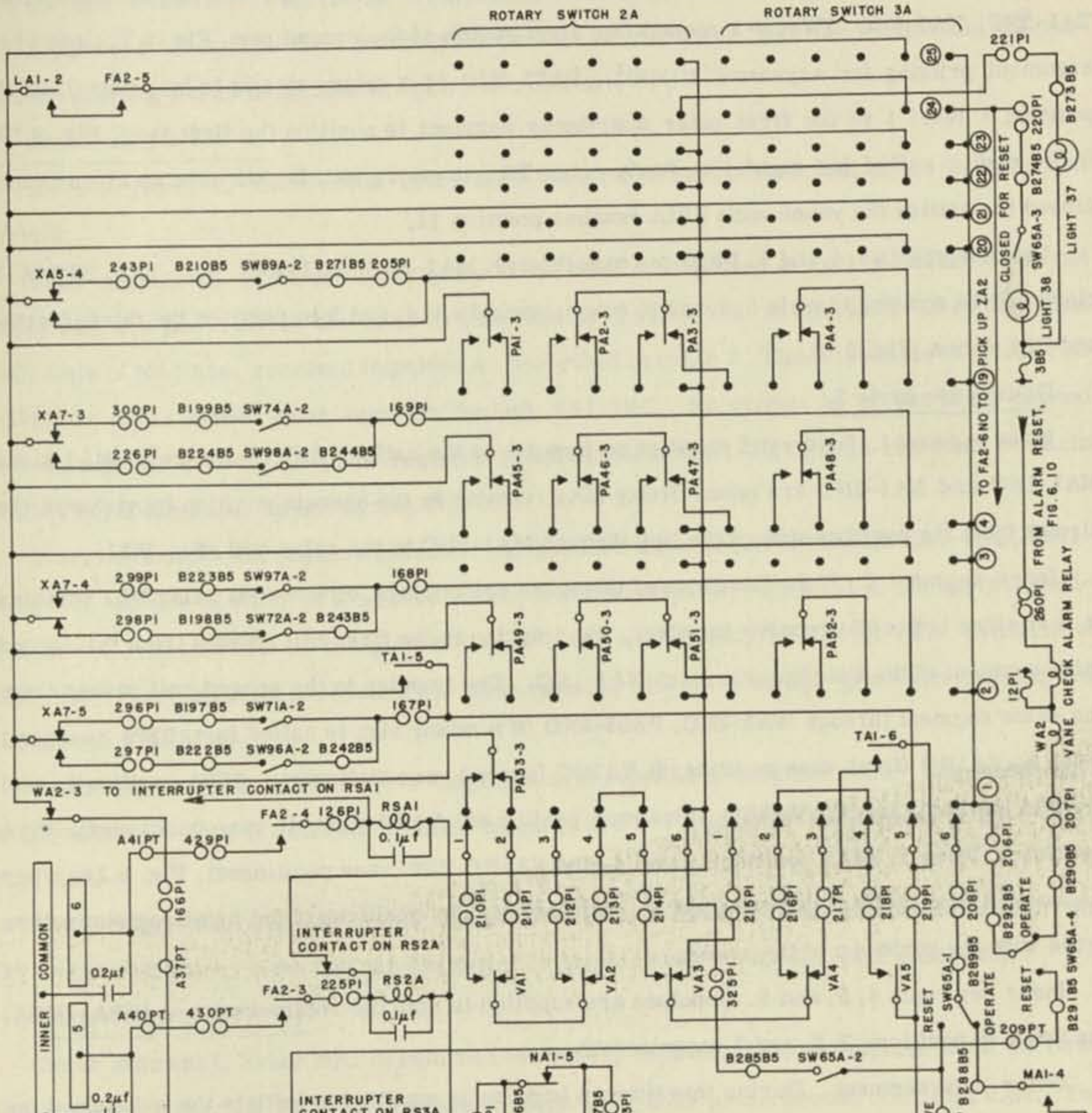

Fig. 9.21 - Rotary switches RS2A and RS3A.

argument printing was coded, relay XA5 is energized and the impulse passes through MA1-3NO, TA1-2NC, XA5-3NO, SW96A-1 closed (the first switch of the second row, Fig. 9.7, closed for argument printing for argument $\geq 1 \times 10^3$), PA53-2NO (if a minus sign is to be printed), RS1A position 1 level 1 to the first outer distributor segment to position the first vane, Fig. 9.19. If the coding called for eight line feeds relay TA1 is energized. In this case no circuits are closed to position the vanes until RS1A reaches position 11.

Outer segments 3, 4, and 5. Impulses pass through MA1-3NO, TA1-2NC, XA5-3NC, SW74A-1 closed, RS1A position 1 levels 3, 4, and 5, outer segments 3, 4, and 5 to position the third, fourth, and fifth vanes, Fig. 9.19.

Distributor cycle 3.

Inner segment 1. Segment 1 supplies no impulse to the coils of differential relay MA1 since MA1-1NC and NA1-3NO are open. Relay MA1 remains in the operate position by virtue of the circuit from the positive side of the line through MA1-2NO to the relay coil, Fig. 9.21.

Inner segment 2. If the positions of the vanes are correct, differential relay NA1 remains at rest since both coils receive impulses. The impulse to the first coil travels from the second inner segment of the distributor through NA1-1NC. The impulse to the second coil passes from the same segment through WA2-3NC, PA53-3NO (if a minus sign is called for), RS2A position 1 level 1, VA1NO (first vane positioned), VA2NC (second vane stationary), RS2A position 1 level 4, RS2A position 1 level 5, VA3NO (third vane positioned), VA4NO (fourth vane positioned), RS3A position 1 level 2, RS3A position 1 level 4, and VA5NO (fifth vane positioned), Fig. 9.21. Thus the second coil of NA1 is energized if, and only if, the positions of the print register relays agree with the positions of the vanes.

Inner segments 4, 5, and 6. Impulses are supplied to step the rotary switches RS3A, RS2A, and RS1A to positions 2, 2, and 3 respectively.

Outer rest segment. During this time an impulse is supplied to initiate the printing of the first character as determined by the vanes positioned during cycle 2. It should be noted that the vane check occurs after the character has been printed.

Outer segments 1, 2, 3, 4, and 5. The vanes are positioned in a distribution, Fig. 9.20, corresponding to the positions of the relays, PA49-PA52, determining the second character to be printed, Fig. 9.19.

Distributor cycles 4 through 21.

If no vane check failure occurs, cycle 3 is repeated for each character; that is, during cycle n, the $(n-2)$ nd character is printed, the positions of the vanes determining the $(n-2)$ nd character are checked, the vanes are positioned for the $(n-1)$ st character, and RS3A, RS2A, and RS1A are stepped to the $(n-1)$ st, the $(n-1)$ st, and the n th positions respectively.

If the vane check fails after printing the $(m-2)$ nd character, both the printer and the calculator are stopped as described in cycles m and $(m+1)$.

Distributor cycle m.

Inner segment 1. Differential relay MA1 remains in the operate position as described in cycle 3.

Inner segment 2. If the positions of the vanes determining the $(m-2)$ nd character do not check with the positions of the print register relays, relay NA1 is operated. Until this time both coils of NA1 have received impulses as described in cycle 3. The impulse to the first coil travels from the second inner segment through NA1-1NC. No circuit is closed to the second coil through WA2-3NC, the print register relay contacts (PA1-PA53) and the vane contacts (VA1-VA5) if the latter do not agree, Fig. 9.21.

Inner segment 3. An impulse passes from the third inner segment through NA1-4NO, MA1-4NO, the operate position of the reset switch, RS3A position $(m-2)$ level 6, the operate position of the reset switch to energize the vane check alarm relay WA2, Fig. 9.21. Contacts of this relay close circuits permitting the main machine alarms to be energized and stopping the calculator, Fig. 6.34.

Inner segments 4, 5, and 6. No impulses are supplied to step the rotary switches RS3A, RS2A, and RS1A since the circuits to their magnets are interrupted by the opening of NA1-5NC, Fig. 9.21.

Outer segments. The $(m-2)$ nd character is printed and the vanes are positioned for the $(m-i)$ st character. Note that the character is printed even though the vane check fails.

Distributor cycle $m+1$.

Inner segment 1. Relay MA1 is returned to its rest position since an impulse from the first inner segment through FA1-2NO passes through NA1-3NO to the second coil, Fig. 9.21. The first coil receives an impulse as described in cycle 3, Fig. 9.21.

Inner segment 2. Relay NA1 remains in the operate position. An impulse reaches the first coil from the positive side of the line through NA1-2NO. The second coil is not energized because WA2-3NC is open, Fig. 9.21.

Outer segments. The $(m-1)$ st character is printed; that is, the character upon which the vane check failed and the next succeeding character are printed before the printer is stopped. The vanes are not positioned for the m th character since MA1-3NO is in the open position. The positive side of the line is again connected to the printer magnet through MA1-5NC, Fig. 9.19.

Assuming that no vane check failure occurred the printer continues in operation through cycle 21.

Distributor cycle 22.

Inner segments. Relay MA1 remains in the operate position as in cycle 3. Relay NA1 remains at rest. Here the circuit to the second coil of relay NA1 runs from the second inner distributor segment through WA2-3NC, and RS3A position 20 level 5. The rotary switches RS3A, RS2A, and RS1A are stepped to positions 21, 21, and 22 respectively, Fig. 9.21.

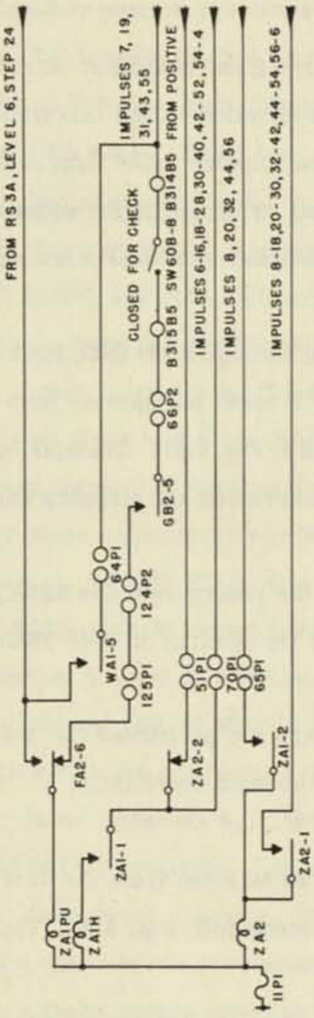

Fig. 9.22 - Printer No. 1, end-print relays.

Outer segments. The 20th character is printed. If no line feeds are coded, an impulse passes through MA1-3NO, TA1-2NC, QA2-2NC, QA1-2NC, SW91A-1 (closed if a space is desired), and RS1A position 21 level 3 to the third outer distributor segment to position the third vane, Fig. 9.19.

Cycles 23, 24, and 25 are similar to cycle 22. At the end of cycle 25 the rotary step switches RS3A, RS2A, and RS1A stand on positions 24, 24, and 25 respectively; character 23 has been printed, and the vanes positioned for character 24.

Distributor cycle 26.

Inner segment 1. Relay MA1 remains in the operate position as in cycle 3.

Inner segment 2. Relay NA1 is operated. The impulse to the first coil travels from the second inner distributor segment through NA1-1NC. The circuit to the second coil through WA2-3NC is not closed since LA1-2NO is now open, Fig. 9.21.

Inner segment 3. An impulse passes from the third inner segment through NA1-4NO, MA1-4NO, the operate position of the reset switch, RS3A position 24 level 6, and FA2-6NO to energize the end-print relay ZA1, Fig. 9.21 and Fig. 9.22.

Inner segments 4, 5, and 6. The rotary switches RS3A, RS2A, and RS1A receive no impulses to step since the circuits to their magnets are interrupted by the opening of NA1-5NC.

Outer segments. The 24th character is printed, and the vanes positioned for the 25th character.

Impulse 32. (a) End-print relay ZA2 is energized through ZA1-2NO, Fig. 9.22. Contact ZA2-2NC is opened interrupting the circuit from the positive side of the line to the hold contacts

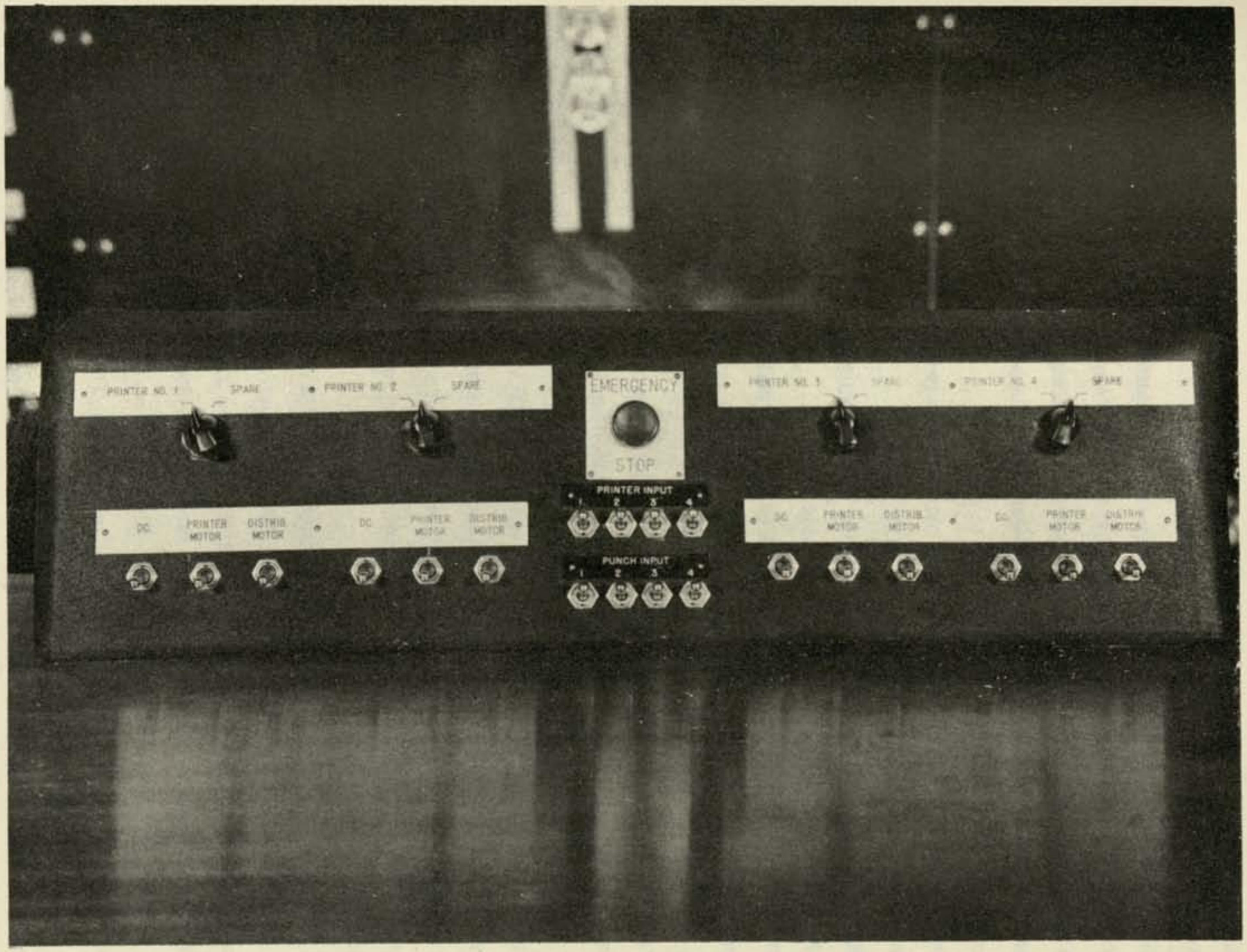

Plate XXXV Switches on Operator's Table

of relays XA1-XA7, QA1, QA2, PA1-PA53, FA1-FA2, and TA1.

Distributor cycle 27.

Inner segment 1. Relay MA1 is returned to its rest position since an impulse from the first inner distributor segment passes through FA1-2NO and NA1-2NO to the second coil, Fig. 9.21. Relay NA1 remains in its operate position due to the circuit from the positive side of the line through NA1-2NO. The circuit through WA2-3NC from the second inner segment to the second coil of NA1 is not completed since LA1-2NO is open.

Outer segments. The 25th character is printed. The printer magnet is again connected to the positive side of the line through MA1-5NC.

Impulse 40. (a) Cam-controlled contact No. 7-4 breaks, opening the hold circuits of relays XA1-XA7, QA1, QA2, PA1-PA53, FA1-FA2, and TA1.

Thus all printing controls are returned to their normal positions, relay NA1 is operated, all other relays are de-energized and the unit is ready for another printing operation.

If the coding calls for the printing of a quantity followed by a carriage return and a single line feed (relay QA1 energized, Fig. 9.13), this latter operation is initiated during cycle 22. The inner segments of the distributor perform the functions previously described for this cycle. Outer segment 4 supplies an impulse through MA1-3NO, TA1-2NC, QA2-2NC, QA1-2NO, and RS1A position 21 level 4 to position the fourth vane, Fig. 9.19, thus calling for a carriage return at the beginning of cycle 23. During cycle 23 the inner segments of the distributor function as before. Outer segment 2 supplies an impulse through MA1-3NO, TA1-2NC, QA2-2NC, QA1-2NO, TA1-3NC, and RS1A position 22 level 2 to position the second vane, Fig. 9.19, thus initiating a line feed at the beginning of cycle 24.

If the coding or the line grouping switches calls for a carriage return and two line feeds, relay QA2 is energized, Fig. 9.13. Contact QA2-2NO performs the same function in this case as contact QA1-2NO does for a single line feed; that is, cycle 23 yields a carriage return and cycle 24 a line feed. In addition, an impulse passes through MA1-3NO, TA1-2NC, QA2-3NO, TA1-4NC, RS1A position 23 level 2, the second outer distributor segment, and the outer common to the printer magnet to position the second vane during cycle 24. Thus the second line feed is supplied at the beginning of cycle 25.

Relay TA1 is energized if eight line feeds are called for by the coding. In this case relay MA1 functions as previously described. In general, the vane check circuit to the second coil of relay NA1 is replaced by a circuit from inner segment 2 through WA2-3NC, a normally closed XA relay contact, a closed contact of a printing switch (Fig. 9.7), a contact of the fifth level of RS1A, and TA1-6NO, Fig. 9.21. At position 1, the circuit runs from WA2-3NC through

TA1-5NO to RS1A position 1 level 5, Fig. 9.21. At positions 3, 7, 11, 16, 20, 21, 22, and 23 the circuit runs from WA2-3NC directly to level 5 of the rotary switch, Fig. 9.21. The second vane is positioned to supply four line feeds by a circuit through MA1-3NO, TA1-2NO, and RS1A positions 11, 15, 20, and 21, Fig. 9.19. The remaining four line feeds are supplied through RS1A positions 22, 23, 24, and 25 by circuits passing through TA1-3NO and TA1-4NO. The operation supplying eight line feeds is terminated by relays ZA1 and ZA2 as are all printing operations.

REFERENCE

1. "Description: Typebar Page Printer (Model 15)," Bulletin 144, Issue I, Teletype Corporation, Chicago, February, 1931.

CHAPTER X

OPERATION OF THE CALCULATOR

After the coding has been completed, the necessary tapes must be prepared by means of three auxiliary pieces of equipment, not a part of the claculator itself. These are the tape preparation unit, Plate VI, and the two tape reproduction tables, Plate VII. Like the input and output devices described in Chapter IX, these units are composed of modified telegraph equipment. The tape preparation unit contains the following components: on the left, a keyboard for manually representing a ten-digit quantity, its associated exponent and their algebraic signs, and a 5-hole tape punch (functional tapes); on the right, a keyboard for manual representation of one line of coding and a 6-hole tape punch (control tapes); a page printer for recording the key settings of either keyboard; and various relays, stepping switches, distributors, and tape reels. A 5-hole tape reader and tape punch are mounted on the functional tape reproducer. The control tape reproducer is similar, but has a 6-hole reader and punch. A detailed description of the operation of these units will be found in Appendix III.

The auxiliary tape punching equipment contains both direct current and alternating current circuits. The direct current supply must be turned on first in order to insure that the punches do not operate until called upon to do so. The polarity of the direct current supply must not be reversed as the equipment contains polarized components.

Since the tape preparation unit employs but one printer, electrical interlocks prevent the use of both keyboards simultaneously. The operation of the printer and of the tape punches is controlled by distributors similar to those employed in the printer unit.

The quantity to be punched into the tape is set up by means of the keys, Plate XVI. These keys will remain locked in position until automatically reset. If any key is incorrectly set, depressing the correct key in the same column will reset the incorrect key. No key need be set to indicate a zero or a positive algebraic sign. Depressing the motor button, which also remains down until automatically reset, causes the punch and printer to start operating. The quantity set in the keys is punched into the tape (Fig. 1.3) and recorded in type II style by the printer.

If it is desired to feed blank tape, that is, with only the sprocket holes punched, the blank feed button rather than the motor button is used. This initiates the punching operation while the printer remains inoperative. If a long section of blank tape is desired, the blank feed button may be held down for several cycles before releasing.

At the end of every tape to be used in the tape readers it is desirable to punch one extra quantity, usually a zero, so that the index hole alarm relay will not be energized when the last quantity desired is read out of the read register. This is accomplished by pushing the motor button alone.

The keyboard, Plate XVIII, for representing one line of coding is similar to that for functional tapes. The keys will lock until reset, and it is not necessary to set any key to indicate a zero. Depressing the motor button initiates both the printing and punching operations. There is also a blank feed button, producing tape with only the sprocket holes punched, which, unlike the functional blank feed button, does not lock down but returns when released. Since the amount of blank tape fed by this method cannot be precisely controlled, the motor button must be used when one or more blank lines of coding are to be inserted in the tape.

The tape reproducing equipment is used to duplicate both control and functional tapes automatically and at relatively high speeds. If a tape becomes worn or damaged, it is far easier to have a master copy on hand to be duplicated by this means than to prepare a new tape on the tape preparation table. The functional tape reproducer has a further purpose. The tape punch units on the machine itself use lightweight paper tape. If an endless tape, for use on the tape readers or interpolators, were made from this paper, it would quickly wear out. Such a tape can be duplicated on the reproducer table, using a heavier tape which wears longer. Both units may be used to minimize the effect of errors which arise in the manual punching of tapes on the tape preparation unit. For instance, should an error be discovered, the tape may be marked, and the information repunched correctly. When the tape is being reproduced, it may be stopped where the error occurred, moved beyond the error, and the duplicating operation then resumed.

All tapes must be checked before they are placed on the calculator. The correctness of functional tapes may be proved by printing the quantities they contain. Control tapes, however, must be checked by inspection.

After the tapes have been completed, the first step in preparing the calculator for operation is starting the generator. Its motor is controlled by means of two push-button stations, Fig. 10.1, one located on the main operating panel, Plate XXIV, and the other on the power panel in the generator room. Next the direct current breaker may be closed either manually or by a push button on the operating panel. The controls, Fig. 10.1, for this circuit breaker receive their power from the generator, thus assuring that it will not be remotely operated unless the generator is running.

A switch is provided in the direct current line for reversing the polarity of the voltage

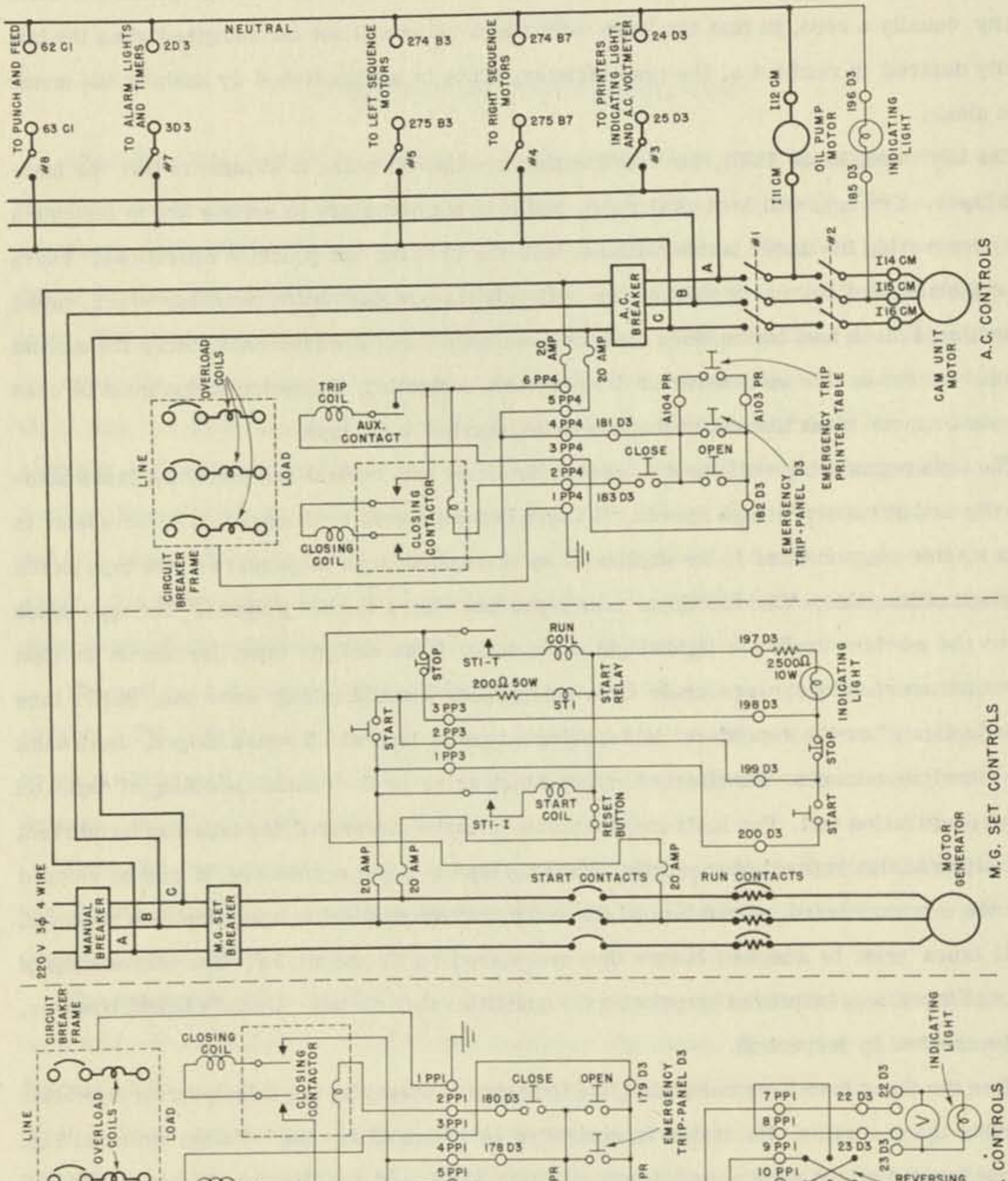

Fig. 10.1 - Power control circuits.

supplied to the machine. There is a similar switch located in the voltmeter circuit. The main reversing switch should be operated only when the generator is disconnected from the calculator. The polarity is reversed daily in order to minimize the effect of any pitting which may occur on the cam-controlled contacts. The circuits of the calculator are so designed that reversal of polarity does not affect their operation.

The control circuits of the alternating current breaker operate in the same manner as those of the direct current breaker except that they are supplied from one phase of the 3-phase line. Depressing either of the emergency trip buttons, Fig. 10.1, will open both circuit breakers.

Switch 1, Fig. 10.1, establishes a circuit to the motor of the oil pump which supplies lubricating oil to the gear box of the cam unit. A pressure-operated switch in the oil line closes a circuit to an alarm light and alarm bell, Fig. 10.2, unless the oil pressure is above a certain minimum value. If after the oil pump motor is started this light remains on and the bell does not stop ringing, no attempt should be made to start the cam unit motor until the cause of low oil pressure has been determined and that condition corrected. Switch 2, in series with switch 1, closes the circuit to the cam unit motor, which cannot be started until the oil pump is running.

Switch 3, Fig. 10.1, establishes a connection to the printer motor circuits, the a.c. voltmeter, and the a.c. indicator light. Switches 4 and 5 supply power to the right and left sequence mechanism motor circuits, respectively. Switch 7 closes a circuit to the alarm lights and delay timers. Switch 8 establishes a connection to the switches of the various small motors on the tape equipment panels. Switches 3, 4, 5, 7, and 8 are usually left closed.

The operating instructions for the calculator will indicate the various tape manipulating mechanisms which are to be used and the tapes to be placed on each. To put a tape on a sequence mechanism, Plate XXII, the manual release handle must be in the "pins out--detent in" position. The tape is threaded between the base plates of the pin-box and around the sprocket wheel. With the detent in, there will be one drive pin on the sprocket wheel which is in a vertical position. The start line of the tape is aligned with this pin and the tape laced around the various pulleys and the shock absorber, which is mounted on a sliding track so that its position may be varied as dictated by the length of the tape. The index on the inner section of the shock absorber must be matched with the edge of the outer section in order to insure that the tension in the tape is maintained at the correct value. The manual release handle may now be returned to the "pins in--detent in" position unless the test panels are to be used in the starting procedure.

The required sequence unit motors may now be started and brought, one at a time, into phase with the cam unit motor. Detailed instructions for performing this operation are found

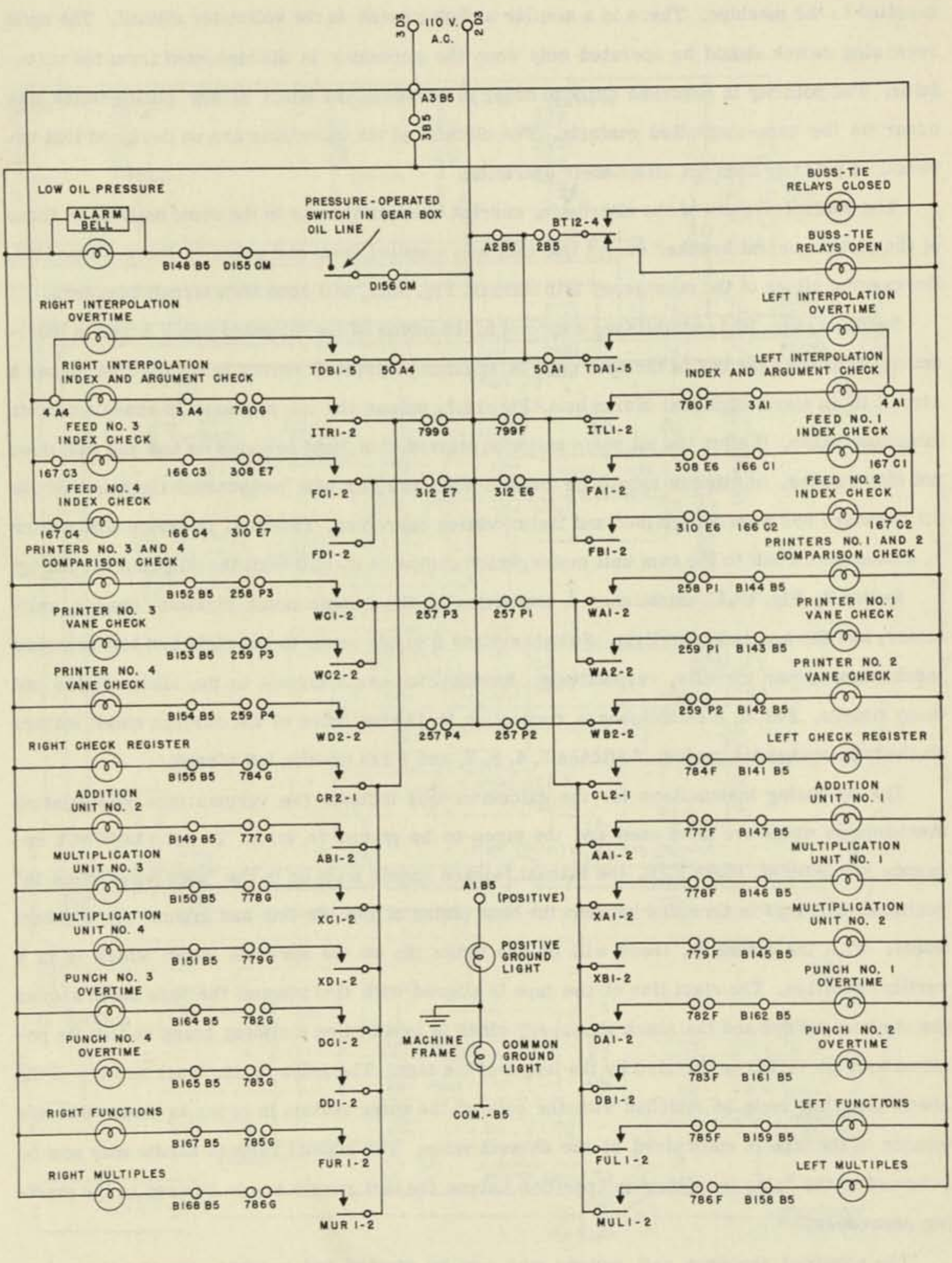

Fig. 10.2 - Alarm and ground lights.

on page 120. When the phasing operation is completed, the run switch must be returned to its "off" position, since otherwise no other mechanism may be phased.

Tapes are placed on the interpolator mechanisms in much the same manner as on the sequence mechanisms. However, no manual release handles are provided since both pins and detents are out when the mechanisms are at rest. The tapes are placed on the sprocket wheels with the aid of the tape positioning lights and switches on the front of the panels, as described on page 207. Once the mechanisms are properly positioned, one of two marks (corresponding to coded argument 197 or 199) on the tape must be aligned with an index on the rim of the sprocket wheel. After the tapes have been adjusted on the mechanisms, the corresponding motor switches should be turned on. The rear covers must be tightly closed since each has a limit switch which prevents starting the motor when the cover is raised. This precludes the possibility of accidentally starting the motor of an interpolator mechanism while minor maintenance is being performed. If the mechanisms have not been used for some time, it may be well to operate their motors by means of the "continuous run" switches, Plate XXVIII, to ascertain that all moving parts are free-running.

Input tapes are placed on the tape reading units, Plate XXXII, either by lacing them over pulleys, in the case of endless tapes, or by winding them on a reel, in the case of double-ended tapes. After raising the cover over the reading pins, the index hole of the first quantity is positioned directly over the five pin, and the cover is replaced. To avoid delay in reading the first quantity from the tape into the computing elements of the calculator, such quantities will usually be read into the read registers by the manual read buttons on the tape equipment panels, Plate XXX. The motors of the tape pullers (endless tapes) or tape winders (double-ended tapes) should be turned on. The required tape punches should be supplied with tape and a short length run through each to insure their proper operation.

The operating instructions will also specify which of the printer units is to be used in the computation, as each unit must be started independently. Their power switches are mounted on a panel on the operator's table, Plate XXXV. The direct current supply to each printer must be turned on before the motor is started so that the printer will not operate until called upon to do so. However, before any attempt is made to use the unit, the printer control rotary switches must be reset by two toggle switches, located on the main control panel. These switches are of the spring-return type and must be held up until the lights above them go on, indicating that the rotary switches are in their home positions. There is a spare printer, plugged into the rear of the operator's table, which may be connected to any one of the printer units. If there is trouble in a unit caused only by malfunctioning of its printer, the spare may be substituted by means of one of four wafer switches, located on the operator's table just above the power switches. As the spare printer uses all the auxiliary equipment and controls of the unit to which it is connected, including distributors, rotary switches, and power switches, the malfunctioning printer must be turned off, and the switching accomplished before the spare is started.

The operating instructions will also contain the settings of the input registers and of the switches controlling certain units of the calculator. The settings of the input registers should be verified by printing the quantities contained therein, since running a problem with incorrect input data is certain to produce incorrect results.

The starting procedure will include the necessary instructions for the use of the test panels to set up starting values, the use of starting tapes, if required, and the indication of the sequence mechanism to be started manually, following the directions given on pages 126-127.

In addition to the running instructions, rerun procedures will be given for all possible check stops as well as for reruns from any arbitrary point in the computation. Eight switches, two sets of four each, located on the operator's table, Plate XXXV, provide for invalidating read-ins to the printers and tape punches during reruns. These switches do not prevent the resetting of the tape punch registers or of the print-input registers. If these switches are used, they must, of course, be turned on when the rerun is completed.

Interrupting a computation by stopping a sequence mechanism either manually or under code control is discussed fully on pages 140-145. However, if either of the emergency stop buttons, Plates XXIV and XXXV, are used, care must be taken to resynchronize and reset all components when restarting.

Mistakes made in manual manipulation are a major source of error in machine computation. Consequently, the importance of checking all manual operations cannot be overemphasized.

The four test panels, together with their operating controls, are invaluable in applying starting, testing, rerunning, and stopping routines. Their circuits are discussed in detail on pages 145-152. The five-second and eleven-second time delay controls have proved useful in testing printing and interpolation routines, respectively, since they allow such routines to be repeatedly initiated under code control. For repeated tape punch or tape read routines, two-second cycling may be used.

The component alarm relays, in addition to energizing the main machine alarm relays, complete circuits to lights, Fig. 10.2, which indicate the malfunctioning unit or the condition which caused the alarm. The lights are on the main control panel, Plate XII, with the exception of the tape reader alarm lights located on each of the tape panels, Plate XXXII, and the interpolator alarm lights located on two of the interpolator panels, Plate XXVI.

The low oil-pressure alarm light is mounted in the center of the group on the main control panel. If the low oil-pressure alarm becomes operative during the course of a run, the calculator must be stopped by means of the "stop left problem" button and the "stop right problem" button, when running on two problems, or either button when running on one problem. The cam unit motor must be stopped and the low oil-pressure condition corrected. The cam unit motor may then be restarted, and the sequence mechanisms again phased. The computation is resumed where it was stopped, by pushing the "start left problem" button, the "start right problem" button, or both, since the auxiliary stop relays KA1-KD1 will cause the last sequence mechanism or mechanisms used to be restarted (page 142).

Two lights below the read-out lights (page 131) indicate the position of the buss-tie relay contacts. One of two lights, Fig. 10.2, below the buss-tie lights will go out while the other will rise to full brilliance if either side of the d.c. line becomes grounded to the machine frame.

Each alarm stop must be treated individually in the operating instructions and specific directions for resuming the computation must be given. However, certain standard procedures are applicable in the case of alarms caused by the failure of a mechanical component.

One of the two interpolator alarm lights indicates that the operation of selecting functional values for interpolation has not been completed in the required length of time. If such a failure occurs, it will be necessary to insure that the low-speed clutch is disengaged before initiating a rerun. Continued failure will necessitate the substitution of the spare mechanism.

The second interpolator alarm light indicates an incorrect argument or a failure to sense an index hole. It should first be ascertained that all index holes are present; if they are, a check should be made to insure that the index sensing pins are operating properly. If the failure did not arise from the index holes or the pins, the argument should be read from register 037 (437) to the transfer register and displayed in the read-out lights. The transformed argument $\bar{X}$ must lie in the range $200 \leq \bar{X} < 1000$ for one interpolation, or the range $200 \leq \bar{X} < 600$ for two interpolations (Fig. 8.2). If it does not, the computation leading to the formation of $\bar{X}$ must be rerun.

The alarms associated with the tape reading units indicate that a reader has failed to sense an index hole. If this alarm is operated, the tape should be examined for proper positioning in the reader and for the presence of an index hole in the value just read. If the tape is properly positioned and the index hole is present, the reader is faulty and should be replaced.

Two cases arise when the check printing circuits cause an alarm stop. In the first, two values of a quantity computed by independent means are check printed to prove them identical. In the second, a quantity derived from a single source is check printed to insure the accuracy of the transfer to the print-input register. In any event the quantities in the two print-input registers should be compared. If they agree, the error arose in the transfer from one of the print-input registers to its print register. If they do not agree, the two situations must be considered. If the quantities came from a single source, another attempt may be made to perform the transfers to the printers, using the test panels. In the case of independent computations, the registers from which the two quantities were drawn may be compared. If the quantities came directly from the computing elements, a rerun should be initiated immediately since quantities are not retained in the sum registers of the addition and multiplication units.

If the vane check on a printer fails, the printer rotary switches should be reset. The quantity to be printed should be read from the print-input register by means of the test panels to the transfer register and back to the print-input register, using the appropriate operation-code. If this is successful, the computation may be resumed. If not, the spare printer should be substituted. Should a punching operation fail of completion, the procedure is the same as that for the vane check failure in a printer.

In every case where a failure can be attributed directly to a replaceable unit, a correctly functioning component should be substituted. Thus the malfunctioning unit may be tested and repaired without impeding the computation.

In March, 1948, the calculator was moved from the Computation Laboratory to the Naval Proving Ground at Dahlgren, Virginia. By June it had been reassembled and was running under test conditions. It may be presumed that during the succeeding six months of operation the greater part of the wiring errors, poorly soldered joints, and cable faults were detected and removed. Thus the chief sources of failure remaining in the machine will be the relays and component mechanisms. The error frequency is still being minimized by a program of preventative maintenance, including progressive inspection and replacement of relays and mechanisms.

Certain standard operating procedures have been drawn up for tracing the particular relay or group of relays at fault when a unit fails. These techniques may be expected to be increasingly refined and shortened by further experience in the operation of the calculator. Indeed, after five years of continuous operation the Staff of the Computation Laboratory is continuing to devise better methods for detecting failures of the Automatic Sequence Controlled Calculator.

The most easily tested components of the calculator are the input and storage registers. The two quantities $+9.9999\ 99999 \times 10^{+15}$ and $-6.6666\ 66666 \times 10^{-15}$ are repeatedly read from an input register via the transfer register to the cross register and the read-out lights. If the quantities appear correctly, it is assured that the 46 relays of each of these registers, together with their associated in- and out-relays, are functioning properly. Similarly a read-in from an input register to a storage register followed by a read-out from the storage register to the lights will check the behavior of the storage register. An incorrect digit in either of the two test quantities will indicate the column whose relays must be examined. Visual inspection of the relays under operating conditions is permitted by the glass windows set in their frames. The jack connections make possible rapid replacement of a defective relay. Less than five minutes should suffice to insure the correct operation of any register.

Identification of the source of an error in an addition unit should present little more difficulty. An augend and an addend, preferably those causing the error, are repeatedly added under control of the test panels. Digits are successively deleted from the smaller of the two terms until the error is eliminated, thus determining the decimal column in which the error arose. Knowledge of the circuits should enable the defective relay to be located and replaced, the entire procedure consuming not more than ten minutes. The same technique may be applied to a multiplication unit. However, since the circuits are more elaborate, location of a defective relay may require as long as fifteen minutes.

If the computing elements of the calculator are known to be functioning properly, it is reasonable to assume that failure to pass a computational check is caused by incorrect input data or failure of a sequence mechanism. If the input data is assumed correct, visual inspection of a sequence mechanism will usually disclose any source of trouble except failure of the reading pins to make contact. If the pins become the object of suspicion, the mechanism should be replaced. Similar considerations apply to the other mechanical components for which spares are provided.

The brief comments given here serve only to indicate the nature of trouble-hunting procedures which are now being used by the Staff of the Naval Proving Ground. These techniques are being revised and improved as rapidly as experience permits. Thus far they have been developed to the point where the calculator operates satisfactorily during 85 per cent of its running time, and this percentage is continuing to increase.

CHAPTER XI

PROBLEM PREPARATION AND SOLUTION OF TYPICAL EXAMPLES

This chapter will be concerned with the planning and preparation of orders to the calculator and of operating instructions requisite to the numerical solution of problems. Four mathematical situations previously dealt with by the machine will be included as illustrative examples.

Unless the amount of computation involved in the solution of a problem is relatively great, the saving of time and human labor by automatic computation may be outweighed by the time and labor required to prepare the problem and the machine for its solution. Two general classes of problems may be delineated where automatic computation is indicated. The first includes problems whose solutions require many repetitions of a relatively short routine, as, for example, in the preparation of mathematical tables. The second class is composed of those problems whose solutions require a large number of consecutive mathematical operations dealing with a relatively small amount of input data. Examples are solutions of partial differential equations or of systems of simultaneous equations of high order.

Numerical methods have been devised to obtain the solutions of virtually all problems of applied mathematics. These methods require only the five fundamental arithmetical operations of addition, subtraction, multiplication, division, and reference to previously computed results. The mathematical solution of a given problem is carried out by the successive application of these operations in prescribed routines, dictated by the particular numerical method of solution chosen.

The first task of problem preparation is to select, on the basis of a mathematical analysis, the method of solution best suited to the problem and to the machine. This analysis will involve examination of the successive routines required to effect the solution.

The present calculator has been designed to carry out the arithmetical operations in accordance with sequences of orders contained in its control tapes. It can receive numerical quantities from its several input devices; perform a succession of additions, subtractions, multiplications, divisions, and sensing operations; and record the results in punched tapes or in printed form. Since each operation requires a distinct time interval for its performance and the number of units available for a particular operation is limited, efficient use of the machine dictates a fine balance in sequencing the orders to perform the several operations.

Although the error frequency of the calculator is small compared to that of a human computer, the hundreds of thousands of operations necessary to the solution of a particular problem are likely to involve failure of one or more of the machine's thousands of parts. The detection of these failures may be accomplished mathematically or mechanically. Checks, usually of a mathematical nature, must be devised to disclose such failures as soon as possible after they occur.

Having chosen the most suitable numerical method of solution, reduced this method to balanced routines of arithmetical operations, and devised checks to prove the results of each routine, the coding for the machine and the instructions for the operating staff may be compiled. The operating instructions must cover the physical preparation of the control, input, and interpolation tapes to be employed; the settings for switches and input registers; procedures for starting each phase of the computation; description of the output quantities to be obtained as intermediate or final results; and rerun procedures to provide for the correction of any erroneously computed quantities.

The evolution of the design of the coding is seldom straightforward. Decisions reached at one stage of the planning may require revision at a later stage. The design factors are usually so interrelated that compromises are essential. Further, the exact course of the analysis will vary with the particular problem and with individual taste. The discussion which follows should therefore be considered as a guide only, and not as an infallible prescription for a successful solution.

Careful study of the given problem is an obvious introduction to the analysis of methods for its solution. The statement of the problem must include all essential information: boundary conditions, relations among the variables, and numerical values of the parameters and constants. The nature of the desired solution must be clearly stated, including such factors as the number of significant digits required in the output variables, type of presentation of the results, and data pertinent to publication. A decision as to the adequacy of the given data will usually be postponed until after the mathematical analysis has been completed, at which time more specific information concerning the accuracy required of this data will be available.

Usually several methods of solution of a given problem are possible, each particularly well adapted to a narrow class of problems or to a particular computing aid. Each method which offers promise of successful employment should be considered in some detail before a final choice is made.

The suitability of the method is influenced by many factors. From the mathematical standpoint, the estimate of error is probably the most important. Computed results are subject to the loss of significant digits from three major sources: round-off, approximation by polynomials, and subtraction of nearly equal quantities.

Since digital computing machines of all types are limited in the span of digits that may be carried, round-off error will be present in all machine computations. Reliable estimates of round-off error are difficult to obtain. Even when an upper bound to this error may be determined, the result may be overly pessimistic. Estimates of probable error are more optimistic but may be too much so.

Approximating polynomials are of frequent occurrence in numerical analysis, as, for example, in numerical integration and differentiation, the numerical solution of differential equations, and the evaluation of functions by truncation of their defining infinite series. Estimates of error, such as remainder terms, are useful for gauging the accuracy of a computed result. The availability of an error estimate is thus a strong argument in favor of a particular method.

The subtraction of nearly equal quantities may lead to a serious loss of significant digits in the results of a computation. One means of detecting this loss is to compare the difference of the two terms with a tolerance, so that a check stop will result if the difference falls below a predetermined magnitude. Wherever possible, methods employing a relatively small difference between two large quantities should be avoided.

To insure the accuracy of the final results to the number of digits required, the maximum error to be expected from the foregoing three sources must be estimated for the entire range of the independent variables. This overall error estimate may then be utilized to determine the number of terms to be retained in each truncated series, the increments of the independent variables, the order of the highest difference which is meaningful, and the ranges of the independent variables for which the method is satisfactory.

Each method of solution capable of producing the desired accuracy in the output quantities must now be reduced to sequences of arithmetical operations. Some of these routines may be repeated a number of times. That method which involves the fewest routines, the simplest procedures, and the minimum of machine time is the logical choice. Since these criteria are generally contradictory, a compromise must be effected, based on individual judgment and experience.

A further factor meriting serious consideration is the suitability of the method to the solution, not only of a single problem but of an entire class. Example 4 illustrates a method of computing a matrix product which is readily adaptable to all types of such products. Although any single type could be obtained from a simpler coding sequence, the additional complexity involved in a general tape is believed to be amply justified by the elimination of problem preparation time otherwise required for the several types of matrix products that might be desired in the future.

Only slightly less important than its mathematical suitability is the ease with which the method of solution can be adapted to the calculator. The factors here affecting the choice of method can conveniently be discussed under the headings of the input and output devices, the temporary storage capacity, and the disposition of the sequence mechanisms.

Machine time should not be lost while waiting for an input quantity. Quantities contained in the input registers are available in one transfer time. Quantities supplied by the tape readers, however, can be obtained only at the rate of one each cycle and a half. Eight consecutive quantities may be selected from the interpolator tapes every eight cycles.

Similar considerations of timing apply to the output devices. Consecutive punching may be accomplished at the rate of consecutive reading—one quantity each cycle and a half. Printing, however, requires four cycles. If the check printing circuits are employed, as they should be for final output quantities, the second printer is involved for one-half cycle.

Should the method of solution involve a repeated sub-routine, it is advantageous to employ the sequence units in a dominant and subsidiary relationship. One unit—the dominant—initiates the computing routine and then calls in the other—the subsidiary. The latter executes the repeated portions of the routine as many times as required and then calls back the dominant to complete the routine. Thus the repeated sub-routine need be coded but once, permitting short control tapes to be used. This type of operation ordinarily requires the use of the read-punch units as temporary storage, as these are the only available devices capable of supplying a sequence of input and output quantities from a single coded order.

The availability of temporary storage has an important bearing on the choice of method. It is desirable that each quantity involved in a particular routine be preserved until the result produced by the routine has been checked. When this is not feasible, at least those quantities required to repeat the routine should be saved. When not otherwise employed, the tape punches may be utilized to preserve such quantities.

When the storage, input, output, and sequencing requirements for the method have been assessed, it may be determined whether one side only or both sides of the machine are required by the method under consideration. Since one-half of the computing elements are idle when both sides are employed under the control of a single sequence mechanism, this type of operation is uneconomical.

The quantities determined by each routine or sub-routine should be checked, so that errors may be detected while the input quantities for the routine are readily available. The three principal types of computational checks involve the use of a mathematical identity, a difference table, or duplicate computation.

The mathematical identity is the preferred type of check, but requires a functional relationship among the variables which is independent of the computing routine.

The tabulation of mathematical functions is a type of computation well suited to the use of difference checks. If it can be determined that a certain order difference is bounded over the interval of the independent variable, this difference may be computed and checked against a preassigned tolerance. In order that an occasional over-tolerance value of the difference legitimately occurring may be recognized as such, the differences should be printed.

When neither the mathematical identity nor the difference check is suited to the computing routine, as in the case of Example 4, recourse must be had to duplicate computations. To be effective, distinct machine components should be employed. Although only a single addition unit is available, summing may be checked by employing direct quantities for one sum and complements for the other.

Placing computation checks at the end of each routine and sub-routine will insure that any machine failure producing a numerical error will be detected promptly, and also that the erroneous computation can be repeated quickly and easily.

The number of significant digits in the output quantities should be determined from the number present in the input data and the unavoidable losses occurring during the computation. For highly precise computations such as mathematical tables, it is usual to permit error only in the lowest order digit printed. For calculations of lesser precision, such as matrix computations or solutions of partial differential equations, all digits are printed that have a high probability of being correct.

The values to be used as tolerances for the several checks must be determined. In some problems the increment interval in the independent variable must be ascertained. Any quantities required for starting values must be calculated, unless a special starting tape is to be employed for their computation.

When repeated routines are involved in the method, the computation should be resolved into as many parts as there are sets of such routines. When the problem contains many variables, the large requirements for temporary storage may dictate the division of the computation into several parts, where each part may provide only a single operation on each of the many variables. However, too frequent changing of tapes is wasteful of computing time.

One-problem operation with a single sequence mechanism in control should be resorted to only when more than two of any of the readers, punches, printers, or sequence units are required by that part of the computation.

Factors to be considered in allocating the input and output units are largely dependent upon the particular problem. The read and punch units should always be employed in parallel, unless a means is available for disclosing errors made by the units or the relays associated with them. If the quantity concerned is punched into a pair of identical tapes, and is simultaneously check printed, errors made in punching or subsequent reading of these quantities may be detected by comparing the two input quantities. The typed list acts as a referee in case of disagreement between the punched values.

The use of parallel tape readers dictates the employment of the machine under one-problem one sequence unit operation when two sequences of input quantities are required (see Example 4). Use of the interpolator units for the introduction of data not representing "smooth" functions is not recommended, as there is no convenient way of detecting errors in the punching or reading of such tapes. These errors will be disclosed by difference irregularities when using the units for their normal purpose.

When all of the foregoing possibilities have been considered and choices have been made as to the method of computation and the allocation of components, a preliminary draft of the coding may be started. Each routine or sub-routine should be coded as a unit, paying particular attention to the reruns necessary to repeat any portion of the computation in which a check stop reveals an error. It will be desirable to use a register list, entering thereon each quantity transferred to a storage register. Since the register is reset prior to each read-in, there is danger that a "live" quantity might be lost by inadvertent use of the register for another quantity. Space in the storage capacity must be reserved for the quantities employed to govern the use of the sign-controlled registers.

Experience with the machine has indicated the desirability of certain coding practices, which will be outlined briefly. Many other practices will undoubtedly be found desirable as experience is accumulated.

Each section of coding is bound up with the computation check and its rerun. When a quantity to be punched or printed has been computed, it should be checked in the cycle preceding the punch or print. However, no transfer should be made to register 073 (473) until the previous check has had an opportunity to become effective. If check printing is being employed and if the two values of the quantity to be checked must be identical, the check printing circuits may be used for the computation check as well as to insure correct printing. When the check printing circuits are so employed, the operation code to print should be placed not later than line 14 of the cycle, in order that the comparison circuits can energize the alarm in time to stop the calculator at the end of the current cycle.

When possible to do so without increasing the computing time, the addition of increments to any of the problem variables or to the control quantities should be deferred until after the check cycle. When this is not done, the operator must subtract any such increment, using the test panels, before initiating a rerun. Advancing input tapes should likewise be deferred until after the check cycle.

Caution should be exercised in dovetailing the coding of two or more routines. This is a commendable practice to save machine time, but may easily be carried to such an extreme that reruns become difficult and complicated.

In the case of a base load problem, however, such overlapping of routines often becomes desirable in order to conserve machine time to the utmost. In this case it is advisable to code two tapes, a "fast" tape and a "slow" tape. In the fast tape, routines may be overlapped, and perhaps only the final results checked. The slow tape should duplicate all operations of the fast tape, using the same components of the calculator. However, no routines should be interposed; rather they should be coded serially, and each individual operation should be checked, preserving all quantities entering the operation until the check is made. Thus, if the machine is failing frequently under control of the fast tape, this tape may be replaced by the slow tape, which will provide an indication of the component which is failing and the quantities involved. After a successful rerun the machine may proceed with the computation at the slower speed while an analysis is made of the data pertinent to the failure. This results in a saving of machine time when tracing an intermittent source of error, since the quantities involved will usually provide a clue to the relay or group of relays which is failing. Obviously, the slow tape may also be used to identify the malfunctioning component when the calculator refuses to pass a particular check.

Appropriate use of the sign-controlled registers may often increase the efficiency and versatility of the sequence tapes. These registers are governed by suitably chosen control quantities, which are arithmetically modified on each repetition of the routine. While the algebra of the control quantities should offer little difficulty, the design of checks to detect errors in their modification or in the operation of the relays themselves should be given careful attention. The employment of all four of these registers to insure the correct number of repetitions of a subsidiary before calling back the dominant sequence mechanism is outlined in Example 4, pages 303-322.

When the coding has been completed, it will usually be found possible to reduce the required number of cycles by changing the order of some operations. When a particular routine is to be repeated many thousands of times, it is quite worthwhile to spend a few hours, if necessary, to reduce the coding to the minimum number of cycles. Since machine time is consumed in check stops, trouble shooting, and reruns, it is false economy to save a cycle, if the resulting coding is too complicated to permit the operating staff readily to trace the computation involved.

Before the final coding is prepared, a first draft of the operating instructions should be made, particular attention being paid to the rerun procedure. Not only must such procedures be provided for all check stops but also for the automatic alarms. In order to provide for these contingencies, a rerun procedure must be devised which permits the computation to be restarted at any previous point. It will perhaps be necessary to make adjustments to facilitate the reruns and may be necessary to make major changes.

The scope of the operating instructions may best be appreciated by careful study of Examples 1, 2, and 4. Every attempt should be made to foresee any difficulty that may arise during the execution of the problem and instructions provided for resolving it. As the operator himself is subject to errors of omission or commission, the instructions should be clear, concise, and complete. In no case should judgment or computations be required of the operator. Many items may in time become matters of standard operating procedure and can then be omitted from the instructions. However, in case of doubt or of an unusual circumstance, the instructions should be explicitly given.

The correctness of the coding should be proved by following it through, line by line, using the register list. All quantities involved, except check and control quantities, may be entered symbolically. However, the numerical values of the check and control quantities must be used. The foregoing should be accomplished for three complete tape revolutions when only one sequence mechanism is employed and for all possible combinations of dominant and subsidiary routines if more than one is used. Finally, a manual computation should be carried out to further prove the correctness of the coding, the preparation of control tapes, and the set-up of the machine. This computation may be that dictated by the first revolution of the control tape or that produced by the substitution of arbitrary values of the parameters and variables. Each step of the computation must be performed in a manner similar to that of the calculator in order that the intermediate results may be compared if the final results fail to check.

As the solution of a problem appropriate to a large-scale digital calculator is equivalent to many weeks of labor by a human computer, it is obvious that the drafting of operating instructions is a serious undertaking. The problem must be viewed as a whole, on one hand, and as a synthesis of details on the other, since inadequate planning of operating procedures is as wasteful of machine time and as likely to produce incorrect results as an error in the copying of an input constant or the use of an erroneous code.

In view of the labor involved in problem preparation, it is extremely desirable to generalize each solution coded to as great an extent as is feasible. The calculator receives its orders in algebraic form, so that any input quantities can be used. The design of control tapes which are independent of the numerical quantities—order, interval, number of approximations, and so forth—will greatly reduce the work of problem preparation once a sufficient tape library has been accumulated.

The foregoing discussion of the hazards to be encountered in planning, coding, and preparation of operating instructions would seem to indicate that these constitute an extraordinarily difficult undertaking. On the other hand, most of the details of these tasks apply to the solution of the given problem by any means, automatic or manual. The complexity arises from the magnitude of the problem, not the means for its solution. Indeed, experience with the Automatic Sequence Controlled Calculator and the present relay calculator has shown that, when a moderate amount of skill has been attained, the whole procedure becomes reasonably straightforward. In fact, such experience proves that, once the basic decisions as to the choice of the numerical method and the allocation of machine components have been made, the coding can be set forth about as rapidly as it can be written.

It is with these thoughts in mind that the following examples should be studied and the reason for each coding principle discerned. It is suggested, in studying these examples, that the reader make use of the register list when checking the coding, following the procedure outlined on page 271.

Example 1. It is required that the polynomial

$$F(x) = x^4 + 3x^3 - \frac{3}{4}x^2 - 22x + 3, \tag{1}$$

be tabulated in the interval $5 \leq x \leq 10$ with $\Delta x = 0.01$. The values of $F(x)$ are to be checked, printed, and punched into a pair of identical tapes. Eight digit accuracy is desired.

When the polynomial is expressed in the form

$$F(x) = (((x + 3)x - 0.75)x - 22)x + 3, \tag{2}$$

three multiplications and four additions are required for its evaluation for each value of the argument. Using differences, each value of $F(x)$ may be obtained by four additions. The polynomial will be computed by both methods and the difference between the two values checked against a positive tolerance T. In order to compute $\bar{F}(x) = F(x)$ by differences, $F(x)$ must be computed manually for x = 4.95, 4.96, 4.97, 4.98, and 4.99, a difference table must be constructed, and the values of $F_{n-1} = F(4.99)$, $\Delta F_{n-2} = \Delta F(4.98)$, $\Delta^2 F_{n-3} = \Delta^2 F(4.97)$, $\Delta^3 F_{n-4} = \Delta^3 F(4.96)$, and $\Delta^4 = 2.4 \times 10^{-7}$ obtained for use in the starting procedure.

PROBLEM PREPARATION

The value assigned to the tolerance T is determined by the following considerations. Since the capacity of the calculator is ten digits, a round-off error will arise in each operation for which the span of digits exceeds ten. In the interval defined, $8\times10^2<F(x)<2\times10^4$ and the exact values extend to not more than eight decimal places. The digit span may increase from ten to thirteen digits only as a result of the third multiplication. Hence a maximum round-off error of 1×10^{-5} is possible in the direct evaluation. When the function is synthesized from the differences, it is necessary to consider the magnitude of the largest difference ΔF. Since $\Delta F(9.99) = 48.56111799$, all first differences will be less than 10^2 and will be accurately computed throughout the interval. However, in the upper portion of the range three digits will be lost when ΔF_{n-1} is added to F_{n-1} to produce $\bar{\bar{F}}_n$ and a maximum round-off error of 1×10^{-5} is possible. Thus a maximum difference $|F(x)-\bar{F}(x)|$ of 2×10^{-5} dictates the selection of $T=2\times10^{-5}$. To prevent the round-off error from accumulating during the computation of $\bar{F}(x_n)$ by differences, the directly computed function $F(x_{n-1})$ will be used in generating $\bar{F}(x_n)$.

For each value of x, the operations tabulated in Fig. 11.1 will be required. The operation of printing is the controlling operation since it requires four cycles for each value of the function. Thus the entire computation of 500 values will require 34 minutes.

The preparation of the problem for machine solution includes the design of the sequence control tape and the formulation of operating instructions. One value of the function is to be computed during each revolution of the control tape. This value is to be check printed on printer No. 1 and punched into tapes on punches No. 1 and No. 2. The values punched into the tapes are to be read back into the machine and compared in order to disclose any errors made by the punches. Since the computing routine is short (4 cycles), it will be necessary to repeat the routine several times when preparing the control tape in order to obtain a tape which will be long enough to pass over the pulleys of the sequence unit.

The required coding is given on pages 280-283. The direct evaluation of $F(x)$ is accomplished by the following operations:

Operation	Cycle	Lines of Coding
$(x_n+3)x_n$	1	3, 4, 23
$(x_n+3)x_n-0.75$	1	25, 26, 30
$((x_n+3)x_n-0.75)x_n$	2	3, 4, 23
$((x_n+3)x_n-0.75)x_n-22$	2	25, 26, 30
$(((x_n+3)x_n-0.75)x_n-22)x_n$	3	3, 4, 23
$F_n=(((x_n+3)x_n-0.75)x_n-22)x_n+3$	3	25, 26, 30

The construction of $\bar{F}(x)$ from the difference table appears in the following lines of coding:

Operation	Cycle	Lines of Coding
$\Delta^3F_{n-3} = \Delta^3F_{n-4} + \Delta^4F$	2	19, 20, 24
$\Delta^2F_{n-2} = \Delta^2F_{n-3} + \Delta^3F_{n-3}$	3	1, 2, 6
$\Delta F_{n-1} = \Delta F_{n-2} + \Delta^2F_{n-2}$	3	7, 8, 12
$\bar{F}_n = F_{n-1} + \Delta F_{n-1}$	3	19, 20, 24

The two values of $F(x)$ thus obtained are subtracted in cycle 4, lines 1, 2, 6, and the difference compared with the tolerance T in the same cycle, lines 7, 8, 12. The comparison is transferred to the check register on line 12. Thus the calculator will be stopped at the end of cycle 4 if $T-|F_n - \bar{F}_n|<0$. The quantity F_n is transferred to print-input register No. 2 on lines 5, 11 of cycle 4 to prepare for check printing on printer No. 1.

The printing and punching of F_n are carried out during the next succeeding revolution of the control tape while F_{n+1} is being computed. Since all subscripts are understood to be increased by one unit at the beginning of each revolution of the tape, the F_n just computed is now designated as F_{n-1}. The check printing of F_{n-1} on printer No. 1 is coded on lines 5, 11 of cycle 1. The quantity F_{n-1} is punched into two tapes on lines 15, 16 and 17, 18 of cycle 2.

Operations	Cycles
3 Multiplications	3
12 Additions	3
4 Direct evaluation	
4 Differencing	
2 Checking	
1 Increasing argument	
1 Decreasing control quantity	
1 Tape-Punch	1.5
1 Print	4

Fig. 11.1 - Operations in evaluating $F(x)$.

During each revolution of the control tape, the argument, x_n , is augmented by Δx , cycle 1, lines 1, 2, 6, and the result, x_{n+1}, by 3 , cycle 1, lines 7, 8, 12. These quantities are transferred to their working registers during cycle 4, lines 13, 14 and 15, 16.

The difference table is prepared by transferring F_{n-1} to its working register lines 13, 14 of cycle 2 and placing the new leading differences in their working registers lines 13, 14, 15, 16, 17, 18 of cycle 1.

The two tape entries are checked by reading corresponding values from the two tapes, subtracting them, lines 19, 20, 24 of cycle 1, comparing the resulting difference with a zero tolerance, lines 7, 8, 12 of cycle 2, and transferring $0-|F_n-F_n^*|$ to the check register, lines 5, 11 of cycle 3. If the tape entries are not identical, the calculator will stop at the end of cycle 3. The tape entries compared are not those currently computed, but those computed ten revolutions earlier, thus allowing for bights in the tapes between the tape punches and the tape readers.

The number of functional values computed is determined by decreasing a control quantity one unit for each revolution of the control tape and transferring the result to the check register, lines 1, 2, 5, 6, 11 of cycle 2. When the control quantity becomes negative the machine is stopped. The initial value of the control quantity is 500 , providing 502 revolutions of the tape since the first functional value is printed and punched during the second revolution.

The arrangement of the control tape must make provision for re-establishing the computation in the event of a machine failure. This requires that all essential quantities be preserved in the calculator. In order to recompute F_n , the values of x_n and x_n+3 are stored on lines 21, 22 and 27, 28 of cycle 1.

The complete operating instructions and coding of the problem, pages 276-283, are presented in the form in which they would be turned over to the operating staff of the calculator.

It is of some interest to note that this problem was the first to be coded and run on the calculator. Since it was also coded and run on the Automatic Sequence Controlled Calculator and was presented in its Manual of Operation,[1] it offers an opportunity to compare the coding and operating instructions employed for the two machines.

Register List

001	x_n (working)
002	x_n+3 (working)
003	$(x_n+3)x_n$
004	$(x_n+3)x_n-0.75$
005	$((x_n+3)x_n-0.75)x_n$
006	$((x_n+3)x_n-0.75)x_n-22$
007	$(((x_n+3)x_n-0.75)x_n-22)x_n$
010	F_n
011	Δ^3F_{n-4} (storage)
012	Δ^2F_{n-3} (storage)
013	ΔF_{n-2} (storage)
014	$\bar{\bar{F}}_n$
015	$F_n-\bar{\bar{F}}_n$
021	Δ^3F_{n-4} (working)
022	Δ^2F_{n-3} (working)
023	ΔF_{n-2} (working)
024	F_{n-1} (storage)
025	$F-F^*$(tape entry difference)
026	tape entry comparison
030	control quantity
031	x_{n+1}
032	$x_{n+1}+3$
033	x_n (storage)
034	x_n+3 (storage)
050	F_{n-10} from tape-reader
051	F^*_{n-10} from tape-reader
052	F_{n-1} to tape-punch
053	F_{n-1} to tape-punch
054	F_{n-1} to printer
055	F_{n-1} to printer

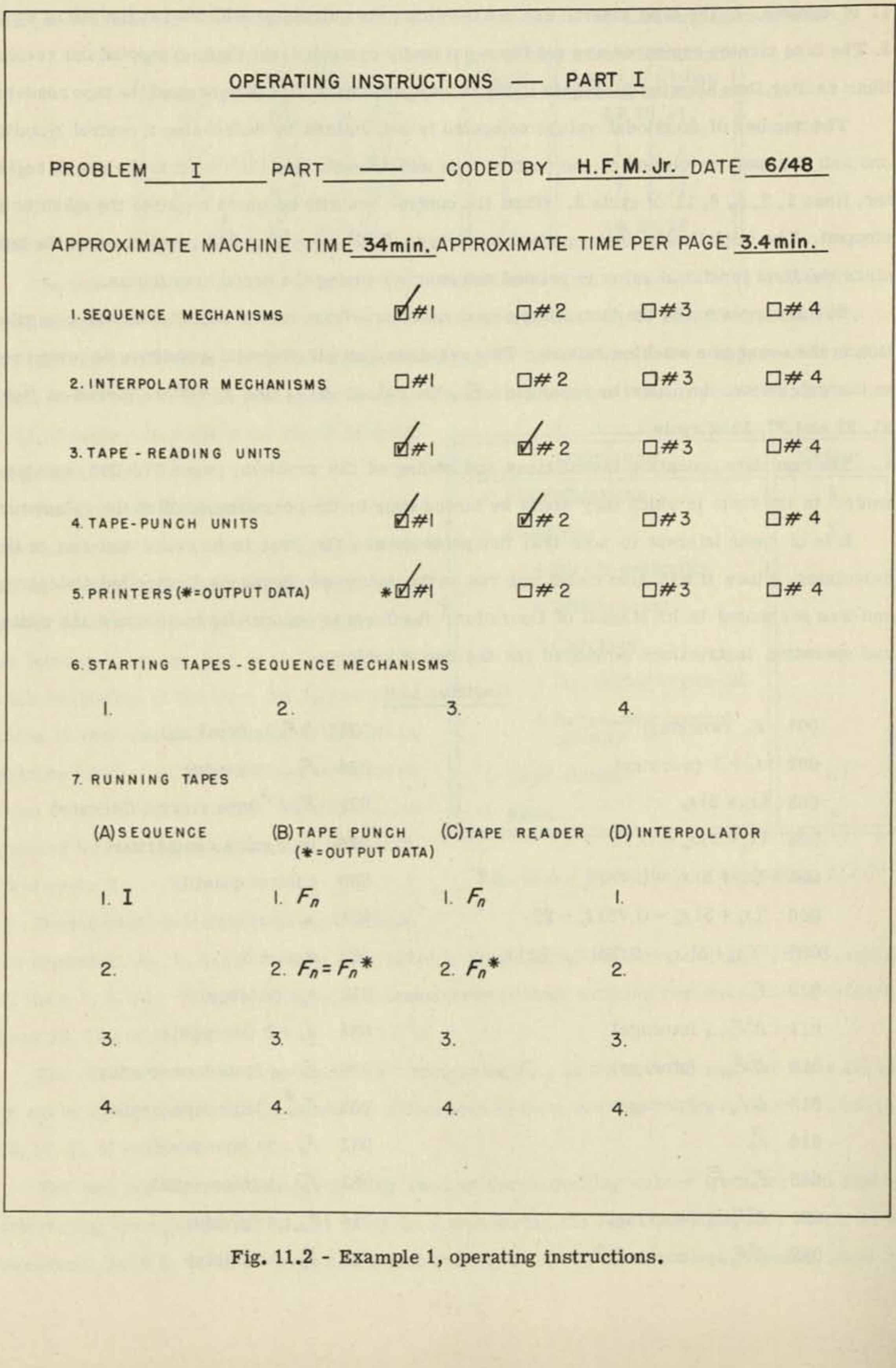

OPERATING INSTRUCTIONS — PART I

PROBLEM I PART —— CODED BY H. F. M. Jr. DATE 6/48

APPROXIMATE MACHINE TIME 34min. APPROXIMATE TIME PER PAGE 3.4min.

1. SEQUENCE MECHANISMS	☑#1	☐#2	☐#3	☐#4
2. INTERPOLATOR MECHANISMS	☐#1	☐#2	☐#3	☐#4
3. TAPE - READING UNITS	☑#1	☑#2	☐#3	☐#4
4. TAPE-PUNCH UNITS	☑#1	☑#2	☐#3	☐#4
5. PRINTERS (*=OUTPUT DATA)	*☑#1	☐#2	☐#3	☐#4

6. STARTING TAPES - SEQUENCE MECHANISMS

1. 2. 3. 4.

7. RUNNING TAPES

(A) SEQUENCE	(B) TAPE PUNCH (*=OUTPUT DATA)	(C) TAPE READER	(D) INTERPOLATOR
1. I	1. F_n	1. F_n	1.
2.	2. $F_n = F_n$*	2. F_n*	2.
3.	3.	3.	3.
4.	4.	4.	4.

Fig. 11.2 - Example 1, operating instructions.

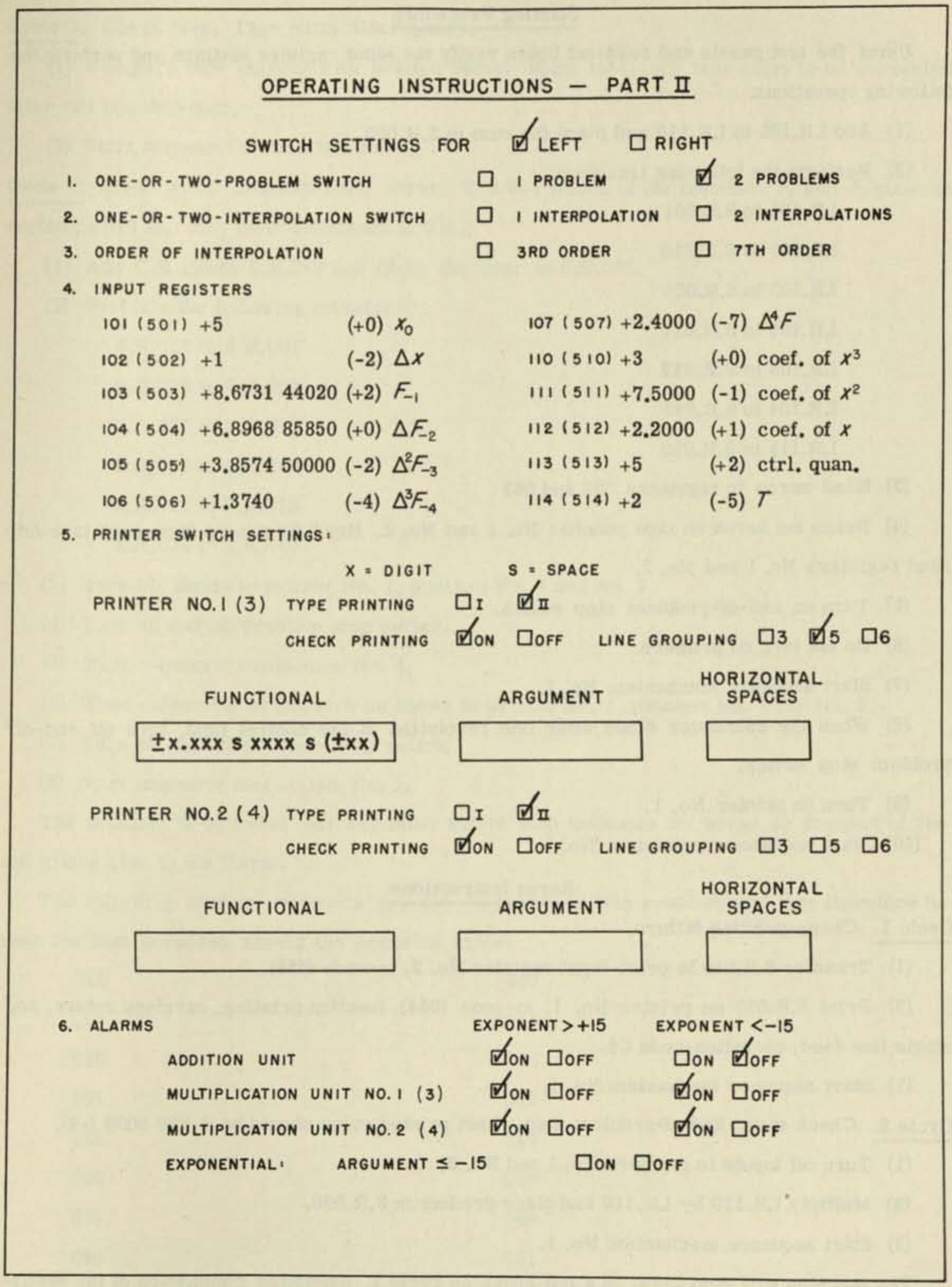

OPERATING INSTRUCTIONS — PART II

SWITCH SETTINGS FOR ☑ LEFT ☐ RIGHT

1. ONE-OR-TWO-PROBLEM SWITCH ☐ 1 PROBLEM ☑ 2 PROBLEMS
2. ONE-OR-TWO-INTERPOLATION SWITCH ☐ 1 INTERPOLATION ☐ 2 INTERPOLATIONS
3. ORDER OF INTERPOLATION ☐ 3RD ORDER ☐ 7TH ORDER
4. INPUT REGISTERS

101 (501) +5	(+0) x_0		107 (507) +2.4000	(-7) $\Delta^4 F$	
102 (502) +1	(-2) Δx		110 (510) +3	(+0) coef. of x^3	
103 (503) +8.6731 44020	(+2) F_{-1}		111 (511) +7.5000	(-1) coef. of x^2	
104 (504) +6.8968 85850	(+0) ΔF_{-2}		112 (512) +2.2000	(+1) coef. of x	
105 (505) +3.8574 50000	(-2) $\Delta^2 F_{-3}$		113 (513) +5	(+2) ctrl. quan.	
106 (506) +1.3740	(-4) $\Delta^3 F_{-4}$		114 (514) +2	(-5) T	

5. PRINTER SWITCH SETTINGS:

X = DIGIT S = SPACE

PRINTER NO. 1 (3) TYPE PRINTING ☐ I ☑ II

CHECK PRINTING ☑ ON ☐ OFF LINE GROUPING ☐ 3 ☑ 5 ☐ 6

FUNCTIONAL	ARGUMENT	HORIZONTAL SPACES
±x.xxx s xxxx s (±xx)		

PRINTER NO. 2 (4) TYPE PRINTING ☐ I ☑ II

CHECK PRINTING ☑ ON ☐ OFF LINE GROUPING ☐ 3 ☐ 5 ☐ 6

FUNCTIONAL	ARGUMENT	HORIZONTAL SPACES

6. ALARMS

	EXPONENT > +15	EXPONENT < -15
ADDITION UNIT	☑ ON ☐ OFF	☐ ON ☑ OFF
MULTIPLICATION UNIT NO. 1 (3)	☑ ON ☐ OFF	☑ ON ☐ OFF
MULTIPLICATION UNIT NO. 2 (4)	☑ ON ☐ OFF	☑ ON ☐ OFF

EXPONENTIAL: ARGUMENT ≤ −15 ☐ ON ☐ OFF

Fig. 11.2 continued - Example 1, operating instructions.

Starting Procedure

Using the test panels and read-out lights verify the input register settings and perform the following operations.

(1) Add I.R.101 to I.R.110 and place the sum in S.R.002.

(2) Perform the following transfers:

I.R.101 to S.R.001
I.R.103 to S.R.010
I.R.103 to S.R.055
I.R.106 to S.R.011
I.R.105 to S.R.012
I.R.104 to S.R.013
I.R.113 to S.R.030

(3) Read zeros to registers 052 and 053

(4) Punch ten zeros on tape punches No. 1 and No. 2. Read first zero from each tape into read registers No. 1 and No. 2.

(5) Turn on end-of-problem stop switch.

(6) Do not turn on printers.

(7) Start sequence mechanism No. 1.

(8) When the calculator stops after one revolution of the control tape, turn off end-of-problem stop switch.

(9) Turn on printer No. 1.

(10) Start sequence mechanism No. 1.

Rerun Instructions

Cycle 1. Check-printing failure.

(1) Transfer S.R.010 to print-input register No. 2, in-code (055).

(2) Print S.R.010 on printer No. 1, in-code (054), function printing, carriage return, and single line feed, operation-code 06.

(3) Start sequence mechanism No. 1.

Cycle 2. Check stop. End-of-problem stop. Last printed value should be 1.270 8000 (+4).

(1) Turn off inputs to printers No. 1 and No. 2.

(2) Multiply I.R.110 by I.R.110 and place product in S.R.030.

(3) Start sequence mechanism No. 1.

The machine will stop again on a left check on cycle 2, indicating completion of the verification of the tape entries in the output tapes F and F^*. This concludes the computation.

Cycle 3. Check stop. Tape entry discrepancy.

(1) Compare tape entries with printed value. Mark incorrect tape entry to be corrected after run is completed.

(2) Start sequence mechanism No. 1.

Cycle 4. Check stop. Computational error. The two values of the functions F_n and $\bar{\bar{F}}_n$ stand in registers 010 and 014, their difference in 015.

(1) Add C.R.150 to S.R.030 and place the sum in S.R.030.

(2) Perform the following transfers:

S.R.033 to S.R.001
S.R.034 to S.R.002
S.R.021 to S.R.011
S.R.022 to S.R.012
S.R.023 to S.R.013
S.R.024 to S.R.010

(3) Turn off inputs to printer No. 1, punches No. 1 and No. 2.

(4) Turn on end-of-problem stop switch.

(5) Start sequence mechanism No. 1.

(6) When calculator stops, turn on inputs to printer No. 1, punches No. 1 and No. 2.

(7) Turn off end-of-problem stop switch.

(8) Start sequence mechanism No. 1.

The problem is so coded that any other alarm stop indicates an error on the part of the unit giving rise to the alarm.

The following storage registers are not employed in this problem and may therefore be used for test purposes should the occasion arise:

016
017
020
027
035
036
037
040
041
042
043
044
045
046
047
056
060
061
062

PROBLEM I TAPE 1 SECOND 1

LINE	FORMULA	SIGN	OUT	IN	OPER.
1	x_n to Aug.R.		001	AUGEND	
2	Δx to Add.R.		102	ADDEND	
3	x_n to MC.R.		001	MULTIPLICAND 1	
4	$x_n + 3$ to MP.R.		002	MULTIPLIER 1	
5	F_{n-1} to T.R.		010	TRANSFER	
6	$x_{n+1} = x_n + \Delta x$ to S.R.031		SUM	031	
7	3 to Aug.R.		110	AUGEND	
8	x_{n+1} to Add.R.		031	ADDEND	
9				MULTIPLICAND 2	
10				MULTIPLIER 2	
11	check print F_{n-1} on Printer No.1 and line feed		TRANSFER	054	06
12	$x_{n+1} + 3$ to S.R.032		SUM	032	
13	$\Delta^3 F_{n-4}$ to T.R.		011	TRANSFER	
14	$\Delta^3 F_{n-4}$ to S.R.021		TRANSFER	021	
15	$\Delta^2 F_{n-3}$ to T.R.		012	TRANSFER	
16	$\Delta^2 F_{n-3}$ to S.R.022		TRANSFER	022	
17	ΔF_{n-2} to T.R.		013	TRANSFER	
18	ΔF_{n-2} to S.R.023		TRANSFER	023	
19	F from tape to Aug.R. and read next F		050	AUGEND	01
20	$-F^*$ from tape to Add.R. and read next F^*	1	051	ADDEND	01
21	x_n to T.R.		001	TRANSFER	
22	x_n to S.R.033		TRANSFER	033	
23	$(x_n + 3) x_n$ to S.R.003		PRODUCT 1	003	
24	$F - F^*$ to S.R.025		SUM	025	
25	$(x_n + 3) x_n$ to Aug.R.		003	AUGEND	
26	-0.75 to Add.R.	1	111	ADDEND	
27	$x_n + 3$ to T.R.		002	TRANSFER	
28	$x_n + 3$ to S.R.034		TRANSFER	034	
29			PRODUCT 2		
30	$(x_n + 3) x_n - 0.75$ to S.R.004		SUM	004	

Fig. 11.3 - Example 1, cycle 1.

PROBLEM I TAPE 1 SECOND 2

LINE	FORMULA	SIGN	OUT	IN	OPER.
1	$(n-1)$ st control quantity to Aug.R.		030	AUGEND	
2	-1 to Add.R.	3	150	ADDEND	
3	$(x_n + 3)x_n - 0.75$ to MC.R.		004	MULTIPLICAND I	
4	x_n to MP.R.		001	MULTIPLIER I	
5	$(n-1)$ st control quantity to T.R.		030	TRANSFER	
6	n th control quantity to S.R.030		SUM	030	
7	$-\|F - F^*\|$ from tape to Aug.R.	3	025	AUGEND	
8	0 to Add.R.			ADDEND	
9				MULTIPLICAND 2	
10				MULTIPLIER 2	
11	end of prob.ck.;$(n-1)$ st control quant.to Ck.R.		TRANSFER	073	
12	Tape entry difference to S.R.026		SUM	026	
13	F_{n-1} to T.R.		010	TRANSFER	
14	F_{n-1} to S.R.024		TRANSFER	024	
15	F_{n-1} to T.R. from Print-Input R. No. 1		054	TRANSFER	
16	F_{n-1} to Punch R. No. 1 and punch		TRANSFER	052	01
17	F_{n-1} to T.R. from Print-Input R. No. 2		055	TRANSFER	
18	F_{n-1} to Punch R. No. 2 and punch		TRANSFER	053	01
19	$\Delta^3 F_{n-4}$ to Aug.R.		021	AUGEND	
20	$\Delta^4 F$ to Add.R.		107	ADDEND	
21				TRANSFER	
22			TRANSFER		
23	$((x_n + 3)x_n - 0.75)x_n$ to S.R.005		PRODUCT I	005	
24	$\Delta^3 F_{n-3} = \Delta^3 F_{n-4} + \Delta^4 F$ to S.R.011		SUM	011	
25	$((x_n + 3)x_n - 0.75)x_n$ to Aug.R.		005	AUGEND	
26	-22 to Add.R.	1	112	ADDEND	
27				TRANSFER	
28			TRANSFER		
29			PRODUCT 2		
30	$((x_n + 3)x_n - 0.75)x_n - 22$ to S.R.006		SUM	006	

Fig. 11.3 continued - Example 1, cycle 2.

PROBLEM I TAPE 1 SECOND 3

LINE	FORMULA	SIGN	OUT	IN	OPER.
1	$\Delta^2 F_{n-3}$ to Aug.R.		022	AUGEND	
2	$\Delta^3 F_{n-3}$ to Add.R.		011	ADDEND	
3	$((x_n+3)x_n-0.75)x_n-22$ to MC.R.		006	MULTIPLICAND I	
4	x_n to MP.R.		001	MULTIPLIER I	
5	Tape entry difference to T.R.		026	TRANSFER	
6	$\Delta^2 F_{n-2} = \Delta^2 F_{n-3} + \Delta^3 F_{n-3}$ to S.R.012		SUM	012	
7	ΔF_{n-2} to Aug.R.		023	AUGEND	
8	$\Delta^2 F_{n-2}$ to Add.R.		012	ADDEND	
9				MULTIPLICAND 2	
10				MULTIPLIER 2	
11	Tape entry difference to Check R.		TRANSFER	073	
12	$\Delta F_{n-1} = \Delta F_{n-2} + \Delta^2 F_{n-2}$ to S.R.013		SUM	013	
13				TRANSFER	
14			TRANSFER		
15				TRANSFER	
16			TRANSFER		
17				TRANSFER	
18			TRANSFER		
19	F_{n-1} to Aug.R.		024	AUGEND	
20	ΔF_{n-1} to Add.R.		013	ADDEND	
21				TRANSFER	
22			TRANSFER		
23	$(((x_n+3)x_n-0.75)x_n-22)x_n$ to S.R.007		PRODUCT 1	007	
24	$\bar{F}_n = F_{n-1} + \Delta F_{n-1}$ to S.R.014		SUM	014	
25	$(((x_n+3)x_n-0.75)x_n-22)x_n$ to Aug.R.		007	AUGEND	
26	3 to Add.R.		110	ADDEND	
27				TRANSFER	
28			TRANSFER		
29			PRODUCT 2		
30	$F_n=(((x_n+3)x_n-0.75)x_n-22)x_n+3$ to S.R.010		SUM	010	

Fig. 11.3 continued - Example 1, cycle 3.

PROBLEM I TAPE 1 SECOND 4

LINE	FORMULA	SIGN	OUT	IN	OPER.
1	F_n to Aug.R.		010	AUGEND	
2	$-\bar{F}_n$ to Add.R.	1	014	ADDEND	
3				MULTIPLICAND I	
4				MULTIPLIER I	
5	F_n to T.R.		010	TRANSFER	
6	$F_n - \bar{F}_n$ to S.R.015		SUM	015	
7	T = tolerance on $F_n-\bar{F}_n$ difference to Aug.R.		114	AUGEND	
8	$-\lvert F_n-\bar{F}_n\rvert$ to Add.R.	3	015	ADDEND	
9				MULTIPLICAND 2	
10				MULTIPLIER 2	
11	F_n to Print-Input R. No. 2		TRANSFER	055	
12	$T-\lvert F_n-\bar{F}_n\rvert$ to Check R. End of page stop		SUM	073	75
13	x_{n+1} to T.R.		031	TRANSFER	
14	x_{n+1} to S.R.001		TRANSFER	001	
15	x_{n+1} + 3 to T.R.		032	TRANSFER	
16	x_{n+1} + 3 to S.R.002		TRANSFER	002	
17				TRANSFER	
18			TRANSFER		
19				AUGEND	
20				ADDEND	
21				TRANSFER	
22			TRANSFER		
23			PRODUCT I		
24			SUM		
25				AUGEND	
26				ADDEND	
27				TRANSFER	
28			TRANSFER		
29			PRODUCT 2		
30			SUM		

Fig. 11.3 concluded - Example 1, cycle 4.

Example 2. It is required that the solution of the ordinary differential equation,

$$y' = y^2 - xy \tag{1}$$

be tabulated for the interval $0 \leq x < 1.5$ when $x_0 = 0$, $y_0 = 0.5$. An accuracy of six significant digits is desired. The computed results are to be checked and printed.

The method of solution adopted was that of J. C. Adams.^{2} This scheme of computation requires the following operations:

(a) expand the unknown function y by Taylor's series,

$$y = y_0 + y_0'(x - x_0) + \frac{y_0''}{2!}(x - x_0)^2 + \frac{y_0'''}{3!}(x - x_0)^3 + \cdots ; \tag{2}$$

(b) let $x - x_0 = ih$, $i = 1, 2, 3, \ldots, m$, then

$$y_i = y_0 + ihy_0' + \frac{(ih)^2}{2!}y_0'' + \frac{(ih)^3}{3!}y_0''' + \cdots ; \tag{3}$$

(c) compute the derivatives y_0', y_0'', y_0''',... using equation (1) and the initial conditions;

(d) evaluate $y_1, y_2, y_3, \ldots, y_m$ by means of equation (3);

(e) compute $y_0', y_1', y_2', \ldots, y_m'$ by means of equation (1);

(f) construct a difference table in $y', \Delta y', \Delta^2 y', \Delta^3 y', \ldots, \Delta^m y'$;

(g) determine the value of the next increment of y, $\Delta y_n = y_{n+1} - y_n$

$$\Delta y_n = h\left[y_n' + \tfrac{1}{2}\Delta y_{n-1}' + \tfrac{5}{12}\Delta^2 y_{n-2}' + \tfrac{3}{8}\Delta^3 y_{n-3}' + \tfrac{251}{720}\Delta^4 y_{n-4}' + \tfrac{95}{288}\Delta^5 y_{n-5}' + \cdots\right]; \tag{4}$$

(h) compute y_{n+1}' by means of equation (1) where

$$x_{n+1} = x_0 + (n+1)h, \quad y_{n+1} = y_n + \Delta y_n$$

(i) form the new sloping line of differences, $\Delta y_n', \Delta^2 y_{n-1}', \Delta^3 y_{n-2}', \ldots, \Delta^m y_{n-m+1}'$;

(j) repeat operations (g), (h), and (i) until the desired interval has been covered.

The errors introduced in the computation depend upon the magnitude of the increment h , the order m of the differences, the number of terms retained in (3), and the size of the interval over which x is to range. An analytic expression for the upper bound of this error is often difficult to derive. Hence an estimate is made for the chosen values of h and m . Observation of the behavior of $\Delta^m y'$ as the computation proceeds will usually indicate the accuracy of the function y.

In the present problem the values $h = 0.005$ and $m = 5$ were selected and six terms of the series (3) were retained. The values of the first five derivatives at the point x_0, y_0 are:

$$y_0' = \tfrac{1}{4}, \quad y_0'' = -\tfrac{1}{4}, \quad y_0''' = -\tfrac{5}{8}, \quad y_0^{iv} = -\tfrac{1}{4}, \quad y_0^{v} = \tfrac{11}{8}.$$

The results of substituting these values in equation (3) and using equation (1) to determine y' are given in Fig. 11.4. For convenience in computation, the substitution $q = hy'$ is made in equation (4) yielding,

$$\Delta y_n = q_n + \tfrac{1}{2}\Delta q_{n-1} + \tfrac{5}{12}\Delta^2 q_{n-2} + \tfrac{3}{8}\Delta^3 q_{n-3} + \tfrac{251}{720}\Delta^4 q_{n-4} + \tfrac{95}{288}\Delta^5 q_{n-5} + \cdots \tag{4a}$$

Thus the difference table of q may be constructed, Fig. 11.5.

i	x_i	y_i	y_i'
-6	-0.030	0.492 390 3038	0.257 219 9204
-5	-0.025	0.493 673 4984	0.256 055 3605
-4	-0.020	0.494 950 8316	0.254 875 3423
-3	-0.015	0.496 222 2260	0.253 679 8310
-2	-0.010	0.497 487 6041	0.252 468 7923
-1	-0.005	0.498 746 8880	0.251 242 1927

Fig. 11.4 - Preliminary values of y_i.

In order to determine the point at which the fifth difference affects the value of the function y, this difference is compared with a tolerance T during each revolution of the sequence control tape. The magnitude of the tolerance insuring six significant digit accuracy may be determined by considering the relations,

$$\text{number of increments} = \frac{1.5}{0.005} = 300,$$

$$\text{maximum influence of } \Delta^5 q = 10^{-6} = (300)\left(\frac{95}{288}\right)\Delta^5 q,$$

$$\text{and } T = \frac{1}{2}(\Delta^5 q)_{\max} = 10^{-8}.$$

Assuming that the sum of all the terms neglected in equation (4a) is less than the term in $\Delta^5 q$, the use of $T = 10^{-8}$ will insure six digit accuracy. Indeed, since this tolerance is conservative, it may be considerably exceeded before the desired accuracy is impaired.

The scheme of computation now becomes:

(a) compute Δy_n by means of equation (4a);

(b) determine $y_{n+1} = y_n + \Delta y_n$, $x_{n+1} = x_n + h$;

(c) calculate $q_{n+1} = hy'_{n+1} = h(y^2_{n+1} - x_{n+1}\, y_{n+1})$;

(d) form the new leading differences Δq_n , $\Delta^2 q_{n-1}$, $\Delta^3 q_{n-2}$, $\Delta^4 q_{n-3}$, $\Delta^5 q_{n-4}$.

The coding required to perform these operations is given on pages 293-301.

The coding may be broken down into several distinct procedures. The computation of y_{n+1} is performed twice. In these two computations distinct multiplication units are used. Since only one addition unit is available, the second computation makes use of negative operands in order that the addition will be performed with complements. The correctness of q_{n+1} and its differences is insured by the magnitude check of the fifth differences.

i	x_i	q	Δq	$\Delta^2 q$	$\Delta^3 q$	$\Delta^4 q$	$\Delta^5 q$
-6	-0.030	0.001 286 099 602					
			-5 822 799				
-5	-0.025	0.001 280 276 803		-77 292			
			-5 900 091		-174		
-4	-0.020	0.001 274 376 712		-77 466		4	
			-5 977 557		-170		-3
-3	-0.015	0.001 268 399 155		-77 636		1	
			-6 055 193		-169		
-2	-0.010	0.001 262 343 962		-77 805			
			-6 132 998				
-1	-0.005	0.001 256 210 964					

Fig. 11.5 - Difference table of q.

The code-interchange register is utilized to control the retention of both the old and the new values of y, q, and q differences. Use of this register makes it unnecessary to transfer the quantities from working to storage registers in order to permit reruns. (The transfer from working to storage registers was used in Example 1.) Incorrect functioning of the code-interchange register is detected by the check, lines 5, 11 of cycle 1. The code-interchange register is initially positive, but has its sign changed at the end of each revolution of the control tape (lines 17 and 18, cycle 9). The sign-invert register, also initially positive, has its sign determined by the control quantity in storage register 062 (lines 21 and 22, cycle 9). The latter control quantity has its sign reversed during cycle 8 by multiplication by -1 (lines 3, 4 and 23). If both registers are energized, the negative sign obtained from input register 113, line 5 of cycle 1, by means of the code-interchange register, is inverted by the sign-invert register before being transferred to the check register. If both registers are de-energized, the positive sign obtained from input register 112 is transferred to the check register. Thus failure of either the code-interchange register or the sign-invert register will result in a negative sign being delivered to the check register, thus stopping the calculator.

The computed results are check printed on printer No. 2. In each case the quantity delivered to print-input register No. 1 is derived from a source independent of that supplying print-input register No. 2, thus checking both the computation and the printing.

Although it is possible to reduce the length of the control tape by one cycle, this requires overlapping the computation, with resultant complications in the use of the code-interchange register and in rerun procedures.

The control tape is independent of the magnitude of the increment h. Thus the value of h may be increased or decreased as indicated by the value of $\Delta^5 q$ to permit economical computation to the desired accuracy. New values of the leading differences of q are required if this change is made.

The operating instructions which are found on pages 288-292 were compiled by and the control tape designed by Mr. Richard D. Woltman of the staff of the Naval Proving Ground, Dahlgren, Virginia.

Register List

001	x_n
002	$\bar{x}_n$
003	$\Delta^5 q_{n-5}\left(\frac{95}{288}\right)$
004	$\frac{251}{720}\Delta^4 q_{n-4}$
005	$\frac{3}{8}\Delta^3 q_{n-3}$
006	$\Delta^2 q_{n-2}\left(\frac{5}{12}\right)$
007	$\frac{1}{2}\Delta q_{n-1}$
010	$\frac{95}{288}\Delta^5 q_{n-5} + \frac{251}{720}\Delta^4 q_{n-4}$
011	$\frac{3}{8}\Delta^3 q_{n-3} + \frac{5}{12}\Delta^2 q_{n-2}$
012	$\frac{95}{288}\Delta^5 q_{n-5} + \frac{251}{720}\Delta^4 q_{n-4} + \frac{3}{8}\Delta^3 q_{n-3} + \frac{5}{12}\Delta^2 q_{n-2}$
013	$y_n + q_n$
014	$y_{n+1} - \frac{1}{2}\Delta q_{n-1}$
015	$x_{n+1} \quad y_{n+1}$
016	y^2_{n+1}
017	y'_{n+1}
022	$\frac{95}{288}\Delta^5 q_{n-5}$
023	$\Delta^4 q_{n-4}\left(\frac{251}{720}\right)$
024	$\Delta^3 q_{n-3}\left(\frac{3}{8}\right)$
025	$\frac{5}{12}\Delta^2 q_{n-2}$
026	$\Delta q_{n-1}\left(\frac{1}{2}\right)$
027	$-(-\bar{y}_{n+1} - (5\times10^{-7}))$
030	q_n
031	q_{n+1}
032	Δq_{n-1}
033	Δq_n
034	$\Delta^2 q_{n-2}$
035	$\Delta^2 q_{n-1}$
036	$\Delta^3 q_{n-3}$
037	$\Delta^3 q_{n-2}$
040	$\Delta^4 q_{n-4}$
041	$\Delta^4 q_{n-3}$
042	$\Delta^5 q_{n-5}$
043	$\Delta^5 q_{n-4}$
044	y_n
045	y_{n+1}
046	$y_{n+1} + 5\times10^{-7}$
047	start-stop control quantity
050	$-(-y_n - q_n)$
051	$-\left(-\Delta^4 q_{n-4}\left(\frac{251}{720}\right) - \frac{95}{288}\Delta^5 q_{n-5}\right)$
052	$-\left(-(y_n + q_n) - \left(\frac{251}{720}\Delta^4 q_{n-4} + \frac{95}{288}\Delta^5 q_{n-5}\right)\right), y_{n+1}$
053	$-\left(-\frac{5}{12}\Delta^2 q_{n-2} - \frac{3}{8}\Delta^3 q_{n-3}\right),\ q_{n+1}$
054	$\bar{x}_{n+1},\ \bar{y}_{n+1} + 5\times10^{-7},\ q_{n+1}$
055	$x_{n+1},\ y_{n+1} + 5\times10^{-7}$
056	$\Delta^5 q_{n-4}$
060	$-\left(-\frac{1}{2}\Delta q_{n-1} - \left(\frac{5}{12}\Delta^2 q_{n-2} + \frac{3}{8}\Delta^3 q_{n-3}\right)\right)$
061	$-(-\bar{y}_{n+1})$
062	code-interchange check control quantity

NOTE: Registers 020 and 021 are not used and therefore may be employed for test purposes.

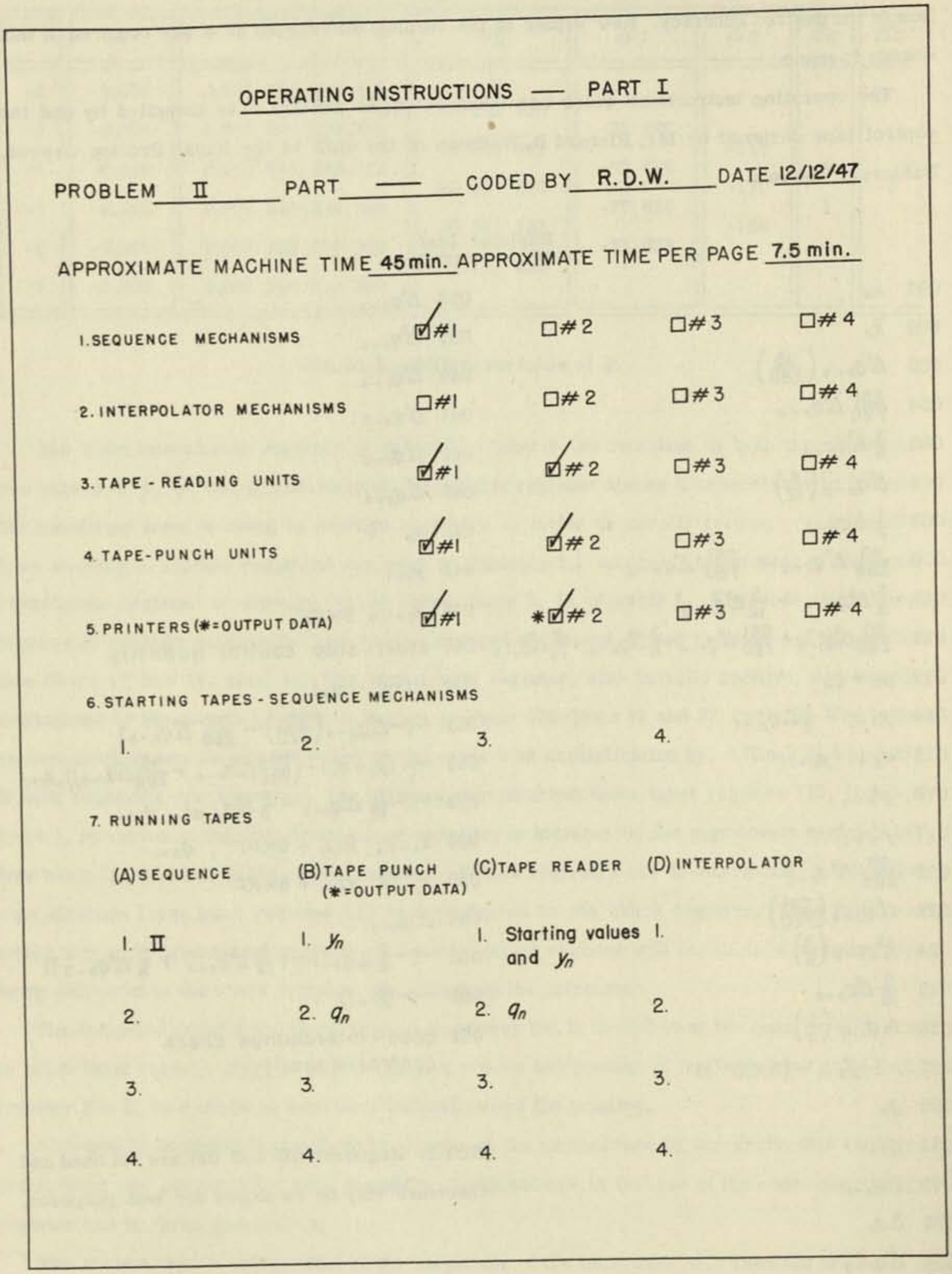

OPERATING INSTRUCTIONS — PART I

PROBLEM II PART —— CODED BY R.D.W. DATE 12/12/47

APPROXIMATE MACHINE TIME 45 min. APPROXIMATE TIME PER PAGE 7.5 min.

1. SEQUENCE MECHANISMS ☑#1 ☐#2 ☐#3 ☐#4
2. INTERPOLATOR MECHANISMS ☐#1 ☐#2 ☐#3 ☐#4
3. TAPE - READING UNITS ☑#1 ☑#2 ☐#3 ☐#4
4. TAPE-PUNCH UNITS ☑#1 ☑#2 ☐#3 ☐#4
5. PRINTERS (*=OUTPUT DATA) ☑#1 *☑#2 ☐#3 ☐#4

6. STARTING TAPES - SEQUENCE MECHANISMS

1. 2. 3. 4.

7. RUNNING TAPES

(A) SEQUENCE	(B) TAPE PUNCH (*=OUTPUT DATA)	(C) TAPE READER	(D) INTERPOLATOR
1. II	1. y_n	1. Starting values and y_n	1.
2.	2. q_n	2. q_n	2.
3.	3.	3.	3.
4.	4.	4.	4.

Fig. 11.6 - Example 2, operating instructions.

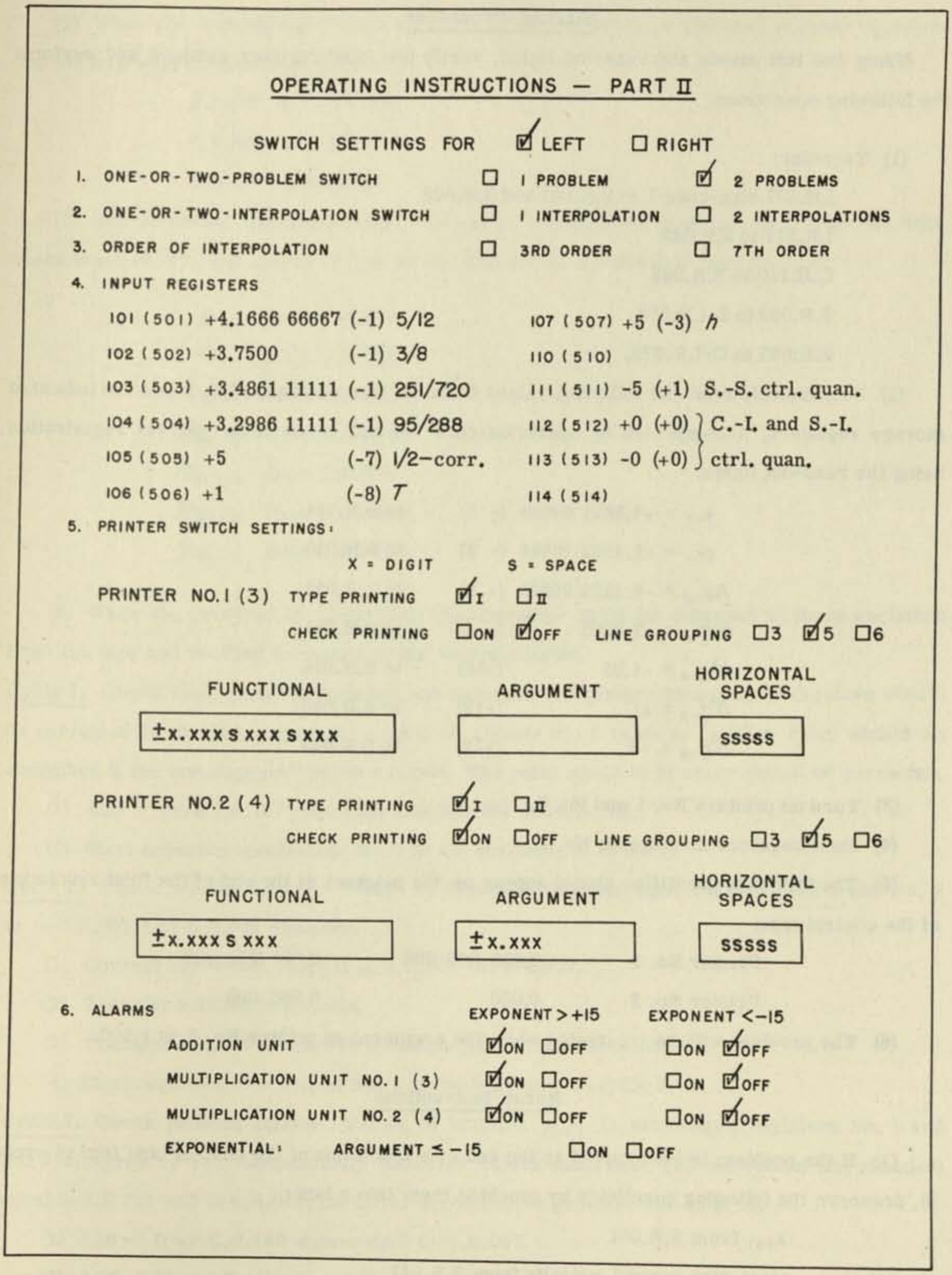

OPERATING INSTRUCTIONS — PART II

SWITCH SETTINGS FOR ☑ LEFT ☐ RIGHT

1. ONE-OR-TWO-PROBLEM SWITCH ☐ 1 PROBLEM ☑ 2 PROBLEMS
2. ONE-OR-TWO-INTERPOLATION SWITCH ☐ 1 INTERPOLATION ☐ 2 INTERPOLATIONS
3. ORDER OF INTERPOLATION ☐ 3RD ORDER ☐ 7TH ORDER
4. INPUT REGISTERS

101 (501)	+4.1666 66667	(-1)	5/12	107 (507)	+5	(-3)	*h*
102 (502)	+3.7500	(-1)	3/8	110 (510)			
103 (503)	+3.4861 11111	(-1)	251/720	111 (511)	-5	(+1)	S.-S. ctrl. quan.
104 (504)	+3.2986 11111	(-1)	95/288	112 (512)	+0	(+0)	C.-I. and S.-I. ctrl. quan.
105 (505)	+5	(-7)	1/2–corr.	113 (513)	-0	(+0)	
106 (506)	+1	(-8)	*T*	114 (514)			

5. PRINTER SWITCH SETTINGS:

X = DIGIT S = SPACE

PRINTER NO. 1 (3) TYPE PRINTING ☑ I ☐ II

CHECK PRINTING ☐ ON ☑ OFF LINE GROUPING ☐ 3 ☑ 5 ☐ 6

FUNCTIONAL	ARGUMENT	HORIZONTAL SPACES
±X.XXX S XXX S XXX		SSSSS

PRINTER NO. 2 (4) TYPE PRINTING ☑ I ☐ II

CHECK PRINTING ☑ ON ☐ OFF LINE GROUPING ☐ 3 ☑ 5 ☐ 6

FUNCTIONAL	ARGUMENT	HORIZONTAL SPACES
±X.XXX S XXX	±X.XXX	SSSSS

6. ALARMS

	EXPONENT > +15	EXPONENT < -15
ADDITION UNIT	☑ ON ☐ OFF	☐ ON ☑ OFF
MULTIPLICATION UNIT NO. 1 (3)	☑ ON ☐ OFF	☐ ON ☑ OFF
MULTIPLICATION UNIT NO. 2 (4)	☑ ON ☐ OFF	☐ ON ☑ OFF

EXPONENTIAL: ARGUMENT ≤ -15 ☐ ON ☐ OFF

Fig. 11.6 continued - Example 2, operating instructions.

Starting Procedure

Using the test panels and read-out lights, verify the input register settings and perform the following operations:

(1) Transfer:

I.R.107 sign-code 1 to S.R.001 and S.R.002
I.R.111 to S.R.047
C.R.150 to S.R.062
S.R.062 to S-I.R.074
S.R.062 to C-I.R.076.

(2) Successively read the following values from the tape on reader No. 1 into the indicated storage registers, accompanied by operation-code 76, and verify their correct registration using the read-out lights:

$y_{-1} = +4.9874\ 68880$	(- 1)	to S.R.044
$q_{-1} = +1.2562\ 10964$	(- 3)	to S.R.030
$\Delta q_{-2} = -6.1329\ 98000$	(- 6)	to S.R.032
$\Delta^2 q_{-3} = -7.7805$	(- 8)	to S.R.034
$\Delta^3 q_{-4} = -1.69$	(-10)	to S.R.036
$\Delta^4 q_{-5} = +1$	(-12)	to S.R.040
$\Delta^5 q_{-6} = -3$	(-12)	to S.R.042

(3) Turn on printers No. 1 and No. 2.

(4) Start sequence mechanism No. 1.

(5) The following quantities should appear on the printers at the end of the first revolution of the control tape:

Printer No. 1	0.000 000 000	0.001 250 000
Printer No. 2	0.000	0.500 000

(6) The problem will be completed when the argument on printer No. 2 is 1.500.

Rerun Instructions

(1) If the problem is interrupted at the end of a revolution of the control tape (end of cycle 9), preserve the following quantities by punching them into a tape:

x_{n+1} from S.R.001
start-stop control quantity from S.R.047
code-interchange and sign-invert control quantity from S.R.062.

(2) When the computation is resumed, the quantities must be returned to these registers and the following transfers performed:

S.R.062 to S-I.R.074
S.R.062 to C-I.R.076
S.R.001 to S.R.002

(3) The following quantities must be read to the transfer register, in conjunction with operation-code 76, and thence to the punch register to be punched into the tape:

y_n from S.R.044
q_n from S.R.030
Δq_{n-1} from S.R.032
$\Delta^2 q_{n-2}$ from S.R.034
$\Delta^3 q_{n-3}$ from S.R.036
$\Delta^4 q_{n-4}$ from S.R.040
$\Delta^5 q_{n-5}$ from S.R.042

(4) When the problem is re-started, the quantities must be returned to these registers from the tape and verified by means of the read-out lights.

Cycle 1. Check stop. Code-interchange and sign-invert registers disagree. Both relays should be energized if the last argument printed on printer No. 2 is even. Neither relay should be energized if the last argument printed is odd. The relay which is in error should be corrected.

(1) Add h from I.R.107 sign-code 1 to S.R.001 and S.R.002.

(2) Start sequence mechanism No. 1 at the beginning of cycle 1.

Cycle 2. Check printing failure. Values of argument in print-input registers No. 1 and No. 2 or in S.R.001 and S.R.002 disagree.

(1) Correct erroneous value if in S.R.001 or S.R.002.

(2) Transfer S.R.002 to S.R.054.

(3) Transfer S.R.001 to S.R.055 accompanied by operation-code 02.

(4) Start sequence mechanism No. 1 at the beginning of cycle 3.

Cycle 7. Check-printing failure. Values of function y_{n+1} in print-input registers No. 1 and No. 2 disagree or two independently computed values disagree. The two values (not rounded) stand in S.R.061 and in S.R.045, the latter accompanied by operation-code 76.

(1) Add -1 from C.R.150 sign-code 3 to S.R.047.

(2) Add $-h$ from I.R.107 sign-code 1 to S.R.001 and S.R.002.

(3) Turn off inputs to printers No. 1 and No. 2.

(4) Turn on end-of-problem stop switch

(5) Start sequence mechanism No. 1 at cycle 1.

(6) When calculator stops, compare values of function in S.R.061 and S.R.045, the latter accompanied by operation-code 76. If the values still disagree, execute another rerun by following the same procedure and omitting the reading of -1 to S.R.047. If the second rerun fails, follow the procedure for interrupting the problem. Then the source of error may be traced, using the register list and coding.

(7) If the values of the function agree after either rerun, turn on inputs to printers No. 1 and No. 2 and cross out the erroneous value of q_{n+1} which was printed on printer No. 1.

(8) Turn off end-of-problem stop switch.

(9) Start sequence mechanism No. 1 at beginning of cycle 7.

Cycle 9. Check stop $T-\Delta^5 q_{n-4}<0$. The quantity $\Delta^5 q_{n-4}$ is recorded in the lights. Error in computation of q_{n+1} or one of its differences, or correct value of $\Delta^5 q_{n-4}$ exceeds tolerance.

(1) Roll back control tape to beginning of cycle 6.

(2) Turn on end-of-problem stop switch.

(3) Add -1 from C.R.150 sign-code 3 to S.R.047.

(4) Transfer:

S.R.062 sign code 1 to S.R.062
S.R.062 to C-I.R.076
S.R.062 to S-I.R.074

(5) Turn off inputs to printer No. 2 and punches No. 1 and No. 2.

(6) Start sequence mechanism No. 1.

(7) When the calculator stops, turn on inputs to printer No. 2 and punch No. 1 and No. 2, turn off end-of-problem stop switch, and start sequence mechanism No. 1 (at the beginning of cycle 6).

(8) If the rerun fails, raise tolerance T to 10^{-7} and repeat rerun. If this rerun succeeds, continue running and notify mathematician.

(9) If the rerun continues to fail, coding and register lists must be used to trace the source of error in the computation of q_{n+1} or one of its differences. One possible source of such an error is that the code-interchange register is in error. It should agree with the sign-invert register. After the source of error has been located and corrected, the computation may be re-established by a tape reading the last six values of q from the tape on punch No. 2 (the final value in the tape is erroneous) and correcting the difference table. The coding for this tape will not be given here.

PROBLEM II TAPE 1 SECOND 1

LINE	FORMULA	SIGN	OUT	IN	OPER.
1	x_n to Aug.R.		001	AUGEND	
2	h to Add.R.		107	ADDEND	
3	$\Delta^5 q_{n-5}$ to MC.R. under control of C.-I.R.		042	MULTIPLICAND 1	76
4	$\frac{95}{288}$ to MP.R.		104	MULTIPLIER 1	
5	$\pm(+0 \text{ or } -0)$ under control of S.-I.R.+C.-I.R.	4	112	TRANSFER	76
6	$x_{n+1} = x_n + h$ to S.R.001		SUM	001	
7	$-\bar{x}_n$ to Aug.R.	1	002	AUGEND	
8	$-h$ to Add.R.	1	107	ADDEND	
9	$\frac{251}{720}$ to MC.R.		103	MULTIPLICAND 2	
10	$\Delta^4 q_{n-4}$ to MP.R. under control of C.-I.R.		040	MULTIPLIER 2	76
11	control quantity check to Check R.		TRANSFER	073	
12	$\bar{x}_{n+1} = -(-\bar{x}_n - h)$ to S.R.002	1	SUM	002	
13				TRANSFER	
14			TRANSFER		
15				TRANSFER	
16			TRANSFER		
17				TRANSFER	
18			TRANSFER		
19				AUGEND	
20				ADDEND	
21				TRANSFER	
22			TRANSFER		
23	$\frac{95}{288} \Delta^5 q_{n-5}$ to S.R.003		PRODUCT 1	003	
24			SUM		
25				AUGEND	
26				ADDEND	
27				TRANSFER	
28			TRANSFER		
29	$\frac{251}{720} \Delta^4 q_{n-4}$ to S.R.004		PRODUCT 2	004	
30			SUM		

Fig. 11.7 - Example 2, cycle 1.

PROBLEM II TAPE 1 SECOND 2

LINE	FORMULA	SIGN	OUT	IN	OPER.
1	$\frac{95}{288}\Delta^5 q_{n-5}$ to Aug.R.		003	AUGEND	
2	$\frac{251}{720}\Delta^4 q_{n-4}$ to Add.R.		004	ADDEND	
3	$\frac{3}{8}$ to MC.R.		102	MULTIPLICAND 1	
4	$\Delta^3 q_{n-3}$ to MP.R. under control of C.-I.R.		036	MULTIPLIER 1	76
5	$\bar{x}_{n+1}$ to T.R.		002	TRANSFER	
6	$\frac{251}{720}\Delta^4 q_{n-4} + \frac{95}{288}\Delta^5 q_{n-5}$ to S.R.010		SUM	010	
7	q_n to Aug.R. under control of C.-I.R.		030	AUGEND	76
8	y_n to Add.R. under control of C.-I.R.		044	ADDEND	76
9	$\Delta^2 q_{n-2}$ to MC.R. under control of C.-I.R.		034	MULTIPLICAND 2	76
10	$\frac{5}{12}$ to MP.R.		101	MULTIPLIER 2	
11	$\bar{x}_{n+1}$ to Print-Input R. No. 1		TRANSFER	054	
12	$y_n + q_n$ to S.R.013		SUM	013	
13	x_{n+1} to T.R.		001	TRANSFER	
14	check print arg. x_{n+1} on Printer No. 2		TRANSFER	055	02
15				TRANSFER	
16			TRANSFER		
17				TRANSFER	
18			TRANSFER		
19				AUGEND	
20				ADDEND	
21				TRANSFER	
22			TRANSFER		
23	$\frac{3}{8}\Delta^3 q_{n-3}$ to S.R.005		PRODUCT 1	005	
24			SUM		
25				AUGEND	
26				ADDEND	
27				TRANSFER	
28			TRANSFER		
29	$\frac{5}{12}\Delta^2 q_{n-2}$ to S.R.006		PRODUCT 2	006	
30			SUM		

Fig. 11.7 continued - Example 2, cycle 2.

PROBLEM II TAPE 1 SECOND 3

LINE	FORMULA	SIGN	OUT	IN	OPER.
1	$\frac{3}{8}\Delta^3 q_{n-3}$ to Aug.R.		005	AUGEND	
2	$\frac{5}{12}\Delta^2 q_{n-2}$ to Add.R.		006	ADDEND	
3	$\frac{1}{2}$ to MC.R.		125	MULTIPLICAND I	
4	Δq_{n-1} to MP.R. under control of C.-I.R.		032	MULTIPLIER I	76
5	$\overline{x}_{n+1}$ to T.R.		054	TRANSFER	
6	$\frac{5}{12}\Delta^2 q_{n-2}+\frac{3}{8}\Delta^3 q_{n-3}$ to S.R.011		SUM	011	
7	$\frac{251}{720}\Delta^4 q_{n-4}+\frac{95}{288}\Delta^5 q_{n-5}$ to Aug.R.		010	AUGEND	
8	$\frac{5}{12}\Delta^2 q_{n-2}+\frac{3}{8}\Delta^3 q_{n-3}$ to Add.R.		011	ADDEND	
9	$\frac{95}{288}$ to MC.R.		104	MULTIPLICAND 2	
10	$\Delta^5 q_{n-5}$ to MP.R. under control of C.-I.R.		042	MULTIPLIER 2	76
11	print arg. $\overline{x}_{n+1}$ on Printer No. 1		TRANSFER	054	05
12	$\frac{5}{12}\Delta^2 q_{n-2}+\frac{3}{8}\Delta^3 q_{n-3}+\frac{251}{720}\Delta^4 q_{n-4}+\frac{95}{288}\Delta^5 q_{n-5}$ to S.R.012		SUM	012	
13				TRANSFER	
14			TRANSFER		
15				TRANSFER	
16			TRANSFER		
17				TRANSFER	
18			TRANSFER		
19	y_n+q_n to Aug.R.		013	AUGEND	
20	$\frac{5}{12}\Delta^2 q_{n-2}+\frac{3}{8}\Delta^3 q_{n-3}+\frac{251}{720}\Delta^4 q_{n-4}+\frac{95}{288}\Delta^5 q_{n-5}$ to Add.R.		012	ADDEND	
21				TRANSFER	
22			TRANSFER		
23	$\frac{1}{2}\Delta q_{n-1}$ to S.R.007		PRODUCT I	007	
24	$y_{n+1}-\frac{1}{2}\Delta q_{n-1}$ to S.R.014		SUM	014	
25	$\frac{1}{2}\Delta q_{n-1}$ to Aug.R.		007	AUGEND	
26	$y_{n+1}-\frac{1}{2}\Delta q_{n-1}$ to Add.R.		014	ADDEND	
27				TRANSFER	
28			TRANSFER		
29	$\frac{95}{288}\Delta^5 q_{n-5}$ to S.R.022		PRODUCT 2	022	
30	y_{n+1} to S.R.045 under control of C.-I.R.		SUM	045	76

Fig. 11.7 continued - Example 2, cycle 3.

PROBLEM II TAPE 1 SECOND 4

LINE	FORMULA	SIGN	OUT	IN	OPER.
1	5×10^{-7}= half correction to Aug.R.		105	AUGEND	
2	y_{n+1} to Add.R. under control of C.-I.R.		045	ADDEND	76
3	$\Delta^4 q_{n-4}$ to MC.R. under control of C.-I.R.		040	MULTIPLICAND 1	76
4	$\frac{251}{720}$ to MP.R.		103	MULTIPLIER 1	
5				TRANSFER	
6	y_{n+1} + half correction to S.R.046		SUM	046	
7				AUGEND	
8				ADDEND	
9	$\Delta^3 q_{n-3}$ to MC.R. under control of C.-I.R.		036	MULTIPLICAND 2	76
10	$\frac{3}{8}$ to MP.R.		102	MULTIPLIER 2	
11			TRANSFER		
12			SUM		
13				TRANSFER	
14			TRANSFER		
15				TRANSFER	
16			TRANSFER		
17				TRANSFER	
18			TRANSFER		
19	$-y_n$ to Aug.R. under control of C.-I.R.	1	044	AUGEND	76
20	$-q_n$ to Add.R. under control of C.-I.R.	1	030	ADDEND	76
21				TRANSFER	
22			TRANSFER		
23	$\frac{251}{720}\Delta^4 q_{n-4}$ to S.R.023		PRODUCT 1	023	
24	$-(-y_n-q_n)$ to S.R.050	1	SUM	050	
25	$-\frac{251}{720}\Delta^4 q_{n-4}$ to Aug.R.	1	023	AUGEND	
26	$-\frac{95}{288}\Delta^5 q_{n-5}$ to Add.R.	1	022	ADDEND	
27				TRANSFER	
28			TRANSFER		
29	$\frac{3}{8}\Delta^3 q_{n-3}$ to S.R.024		PRODUCT 2	024	
30	$-\left(-\frac{251}{720}\Delta^4 q_{n-4}-\frac{95}{288}\Delta^5 q_{n-5}\right)$ to S.R.051	1	SUM	051	

Fig. 11.7 continued - Example 2, cycle 4.

PROBLEM II TAPE 1 SECOND 5

LINE	FORMULA	SIGN	OUT	IN	OPER.
1	$-(y_n + q_n)$ to Aug.R.	1	050	AUGEND	
2	$-\left(\frac{251}{720}\Delta^4 q_{n-4} + \frac{95}{288}\Delta^5 q_{n-5}\right)$ to Add.R.	1	051	ADDEND	
3	$\frac{5}{12}$ to MC.R.		101	MULTIPLICAND I	
4	$\Delta^2 q_{n-2}$ to MP.R. under control of C.-I.R.		034	MULTIPLIER I	76
5				TRANSFER	
6	$-\left(-y_n - q_n - \frac{251}{720}\Delta^4 q_{n-4} - \frac{95}{288}\Delta^5 q_{n-5}\right)$ to S.R.052	1	SUM	052	
7				AUGEND	
8				ADDEND	
9	Δq_{n-1} to Mc.R. under control of C.-I.R.		032	MULTIPLICAND 2	76
10	$\frac{1}{2}$ to Mp.R.		125	MULTIPLIER 2	
11			TRANSFER		
12			SUM		
13				TRANSFER	
14			TRANSFER		
15				TRANSFER	
16			TRANSFER		
17				TRANSFER	
18			TRANSFER		
19				AUGEND	
20				ADDEND	
21				TRANSFER	
22			TRANSFER		
23	$\frac{5}{12}\Delta^2 q_{n-2}$ to S.R.025		PRODUCT I	025	
24			SUM		
25	$-\frac{5}{12}\Delta^2 q_{n-2}$ to Aug.R.	1	025	AUGEND	
26	$-\frac{3}{8}\Delta^3 q_{n-3}$ to Add.R.	1	024	ADDEND	
27				TRANSFER	
28			TRANSFER		
29	$\frac{1}{2}\Delta q_{n-1}$ to S.R.026		PRODUCT 2	026	
30	$-\left(-\frac{5}{12}\Delta^2 q_{n-2} - \frac{3}{8}\Delta^3 q_{n-3}\right)$ to S.R.053	1	SUM	053	

Fig. 11.7 continued - Example 2, cycle 5.

PROBLEM II TAPE 1 SECOND 6

LINE	FORMULA	SIGN	OUT	IN	OPER.
1	$-\left(\frac{5}{12}\Delta^2 q_{n-2}+\frac{3}{8}\Delta^3 q_{n-3}\right)$ to Aug.R.	1	053	AUGEND	
2	$-\frac{1}{2}\Delta q_{n-1}$ to Add.R.	1	026	ADDEND	
3	x_{n+1} to MC.R.		001	MULTIPLICAND 1	
4	y_{n+1} to MP.R. under control of C.-I.R.		045	MULTIPLIER 1	76
5				TRANSFER	
6	$-\left(-\frac{1}{2}\Delta q_{n-1}-\frac{5}{12}\Delta q_{n-2}-\frac{3}{8}\Delta^3 q_{n-3}\right)$ to S.R.060	1	SUM	060	
7	$-\left(y_n+q_n+\frac{251}{720}\Delta^4 q_{n-4}+\frac{95}{288}\Delta^5 q_{n-5}\right)$ to Aug.R.	1	052	AUGEND	
8	$-\left(\frac{1}{2}\Delta q_{n-1}+\frac{5}{12}\Delta^2 q_{n-2}+\frac{3}{8}\Delta^3 q_{n-3}\right)$ to Add.R.	1	060	ADDEND	
9	y_{n+1} to MC.R. under control of C.-I.R.		045	MULTIPLICAND 2	76
10	y_{n+1} to MP.R. under control of C.-I.R.		045	MULTIPLIER 2	76
11			TRANSFER		
12	$-(-\bar{y}_{n+1})$ to S.R.061: end of problem stop	1	SUM	061	75
13				TRANSFER	
14			TRANSFER		
15				TRANSFER	
16			TRANSFER		
17				TRANSFER	
18			TRANSFER		
19	$-\bar{y}_{n+1}$ to Aug.R.	1	061	AUGEND	
20	-5×10^{-7} = half correction to Add.R.	1	105	ADDEND	
21				TRANSFER	
22			TRANSFER		
23	$x_{n+1}\, y_{n+1}$ to S.R.015		PRODUCT 1	015	
24	$-\left(-\bar{y}_{n+1}-\text{half correction}\right)$ to S.R.027	1	SUM	027	
25				AUGEND	
26				ADDEND	
27				TRANSFER	
28			TRANSFER		
29	y^2_{n+1} to S.R.016		PRODUCT 2	016	
30			SUM		

Fig. 11.7 continued - Example 2, cycle 6.

PROBLEM II TAPE 1 SECOND 7

LINE	FORMULA	SIGN	OUT	IN	OPER.
1	y^2_{n+1} to Aug.R.		016	AUGEND	
2	$-x_{n+1}\,y_{n+1}$ to Add.R.	1	015	ADDEND	
3				MULTIPLICAND 1	
4				MULTIPLIER 1	
5	$\bar{y}_{n+1}$+ half correction to T.R.		027	TRANSFER	
6	$y'_{n+1}=y^2_{n+1}-x_{n+1}\,y_{n+1}$ to S.R.017		SUM	017	
7				AUGEND	
8				ADDEND	
9	y'_{n+1} to MC.R.		017	MULTIPLICAND 2	
10	h to MP.R.		107	MULTIPLIER 2	
11	$\bar{y}_{n+1}$ + half correction to Print-Input R.No.1		TRANSFER	054	
12			SUM		
13	y_{n+1}+half correction to T.R.		046	TRANSFER	
14	check print y_{n+1} on Printer No. 2		TRANSFER	055	06
15				TRANSFER	
16			TRANSFER		
17				TRANSFER	
18			TRANSFER		
19	n th start-stop control quantity to Aug.R.		047	AUGEND	
20	1 to Add.R.		150	ADDEND	
21				TRANSFER	
22			TRANSFER		
23			PRODUCT 1		
24	$(n+1)$ st start-stop control quantity to S.R.		SUM	047	
25				AUGEND	
26				ADDEND	
27	$(n+1)$ st start-stop control quantity to T.R.		047	TRANSFER	
28	$(n+1)$st start-stop control quantity to S.-S.R.		TRANSFER	075	
29	$q_{n+1}=hy'_{n+1}$ to Print-Input R.No.1 and print		PRODUCT 2	054	06
30			SUM		

Fig. 11.7 continued - Example 2, cycle 7.

PROBLEM II TAPE 1 SECOND 8

LINE	FORMULA	SIGN	OUT	IN	OPER.
1	q_{n+1} to Aug.R.		054	AUGEND	
2	$-q_n$ to Add.R. under control of C.-I.R.	1	030	ADDEND	76
3	-1 to MC.R.	3	150	MULTIPLICAND 1	
4	nth C.-I. control quantity to MP.R.		062	MULTIPLIER 1	
5	q_{n+1} to T.R.		054	TRANSFER	
6	$\Delta q_n = q_{n+1} - q_n$ to S.R.033 under C.-I.R.		SUM	033	76
7	$-\Delta q_{n-1}$ to Aug.R. under control of C.-I.R.	1	032	AUGEND	76
8	Δq_n to Add.R. under control of C.-I.R.		033	ADDEND	76
9				MULTIPLICAND 2	
10				MULTIPLIER 2	
11	q_{n+1} to S.R.031 under control of C.-I.R.		TRANSFER	031	76
12	$\Delta^2 q_{n-1} = \Delta q_n - \Delta q_{n-1}$ to S.R.035 under C.-I.R.		SUM	035	76
13	y_{n+1} to T.R. under control of C.-I.R.		045	TRANSFER	76
14	y_{n+1} to Punch R. No. 1 and punch		TRANSFER	052	01
15	q_{n+1} to T.R. under control of C.-I.R.		031	TRANSFER	76
16	q_{n+1} to Punch R. No. 2 and punch		TRANSFER	053	01
17				TRANSFER	
18			TRANSFER		
19	$\Delta^2 q_{n-1}$ to Aug.R. under control of C.-I.R.		035	AUGEND	76
20	$-\Delta^2 q_{n-2}$ to Add.R. under control of C.-I.R.	1	034	ADDEND	76
21				TRANSFER	
22			TRANSFER		
23	$(n+1)$st C.-I. control quantity to S.R.062		PRODUCT 1	062	
24	$\Delta^3 q_{n-2} = \Delta^2 q_{n-1} - \Delta^2 q_{n-2}$ to S.R. under C.-I.R.		SUM	037	76
25	$-\Delta^3 q_{n-3}$ to Aug.R. under control of C.-I.R.	1	036	AUGEND	76
26	$\Delta^3 q_{n-2}$ to Add.R. under control of C.-I.R.		037	ADDEND	76
27				TRANSFER	
28			TRANSFER		
29			PRODUCT 2		
30	$\Delta^4 q_{n-3} = \Delta^3 q_{n-2} - \Delta^3 q_{n-3}$ to S.R. under C.-I.R.		SUM	041	76

Fig. 11.7 continued - Example 2, cycle 8.

PROBLEM II TAPE 1 SECOND 9

LINE	FORMULA	SIGN	OUT	IN	OPER.
1	$\Delta^4 q_{n-3}$ to Aug.R. under control of C.-I.R.		041	AUGEND	76
2	$-\Delta^4 q_{n-4}$ to Add.R. under control of C.-I.R.	1	040	ADDEND	76
3				MULTIPLICAND 1	
4				MULTIPLIER 1	
5				TRANSFER	
6	$\Delta^5 q_{n-4} = \Delta^4 q_{n-3} - \Delta^4 q_{n-4}$ to S.R. under C.-I.R.		SUM	043	76
7	$-\|\Delta^5 q_{n-4}\|$ to Aug.R. under control of C.-I.R.	3	043	AUGEND	76
8	$T =$ tolerance on $\Delta^5 q_{n-4}$ to Add.R.		106	ADDEND	
9				MULTIPLICAND 2	
10				MULTIPLIER 2	
11			TRANSFER		
12	$T - \|\Delta^5 q_{n-4}\|$ to Check R.;end of problem stop		SUM	073	75
13	$\Delta^5 q_{n-4}$ to T.R. under control of C.-I.R.		043	TRANSFER	76
14	$\Delta^5 q_{n-4}$ to read-out lights; S.-S.R. stop		TRANSFER	056	74
15				TRANSFER	
16			TRANSFER		
17	$(n+1)$st C.-I. control quantity to T.R.		062	TRANSFER	
18	$(n+1)$st C.-I. control quantity to C.-I.R.		TRANSFER	076	
19				AUGEND	
20				ADDEND	
21	$(n+1)$st C.-I. control quantity to T.R.		062	TRANSFER	
22	$(n+1)$st C.-I. control quantity to S.-I.R.		TRANSFER	074	
23			PRODUCT 1		
24			SUM		
25				AUGEND	
26				ADDEND	
27				TRANSFER	
28			TRANSFER		
29			PRODUCT 2		
30			SUM		

Fig. 11.7 concluded - Example 2, cycle 9.

Example 3. It was required to tabulate the solutions of a pair of simultaneous ordinary differential equations,

$$\left.\begin{aligned}\dot{\theta} &= A \sin t \ \cos \rho \\ \dot{\rho} &= \beta - A \sin t \ \sin \rho \ \cot \theta\end{aligned}\right\} \tag{1}$$

subject to certain specified initial conditions and certain specified values of the parameters A and β. Due to the periodicity of the solutions, the interval of integration is restricted to

$$\pi/2 \leq t \leq \pi.$$

The quadrature formula employed, based on Lagrange's interpolation formula, was

$$\theta_{n+1} = \theta_n + h(A_0 \dot{\theta}_{n-4} + A_1 \dot{\theta}_{n-3} + A_2 \dot{\theta}_{n-2} + A_3 \dot{\theta}_{n-1} + A_4 \dot{\theta}_n). \tag{2}$$

Here the approximate error is

$$|E_\theta| \approx |0.33 \, h \Delta^5 \dot{\theta}_n| \tag{3}$$

where

$$\Delta^5 \dot{\theta}_n = \dot{\theta}_n - 5\dot{\theta}_{n-1} + 10\dot{\theta}_{n-2} - 10\dot{\theta}_{n-3} + 5\dot{\theta}_{n-4} - \dot{\theta}_{n-5}. \tag{4}$$

Corresponding expressions may be written for ρ_{n+1} and $|E_\rho|$..

The computation was carried out using two sequence mechanisms on one side of the calculator. The starting values required to evaluate θ_{n+1} and ρ_{n+1} were computed manually and punched into a tape.

During its first revolution, the control tape on sequence mechanism No. 2 evaluated θ_{n+1}, $|E_\theta|$, $\sin \theta_{n+1}$, and $\cos \theta_{n+1}$ utilizing the even registers. A minus sign was then read into the code-interchange register, and the corresponding terms , ρ_{n+1}, $|E_\rho|$, $\sin \rho_{n+1}$, and $\cos \rho_{n+1}$ were evaluated on the second revolution using the odd registers.

Sequence mechanism No. 1 was then called in to evaluate equations (1), $\sin t$ being supplied from a previously computed value tape. This series of operations was repeated n times until $\pi/2 + n\Delta t = \pi$. The "times-two times-five" register 061 proved useful in obtaining the terms of equation (4).

The quantities $t, \theta, \rho, \dot{\theta}$, and $\dot{\rho}$ were both printed and punched. Thus the necessary values were available in tapes to start the computation at any arbitrary point, or to change the interval should the printed values of either $|E_\theta|$ or $|E_\rho|$ show such a change to be desirable.

The differential equations (1) arose in connection with an important application studied by Dr. C. C. Bramble and the staff of the Naval Proving Ground, Dahlgren, Virginia. These equations represented the first serious problem to be solved by the calculator. Space will not permit the inclusion here of the detailed coding and operating instructions prepared by Dr. Clarence Ross.

Example 4. It is required to design control tapes to compute the product of two matrices,

$$[W]_{m,p} = [U]_{m,n}\ [V]_{n,p}\,. \tag{1}$$

By definition, each element $w_{i,j}$ of $[W]$ is obtained by summing the products of the n pairs of elements taken in order from the i th row of $[U]$ and the j th column of $[V]$; that is;

$$w_{i,j} = \sum_{r=1}^{n} u_{i,r}\, v_{r,j}\,. \tag{2}$$

Thus, in general, a matrix product of the form (1) involves $m \times p$ operations of the type (2), a total of $m \times n \times p$ multiplications in all.

The coding for the two tapes necessary to perform this multiplication is given on pages 313-321. The first tape, No. 1 on sequence mechanism No. 1, initiates the computation of the element $w_{i,j}$ by forming and checking the product $u_{i,1} v_{1,j}$. Control of the calculator is then transferred to tape No. 2 on sequence mechanism No. 2. Each revolution of this tape forms a product $u_{i,r} v_{r,j}$, adds it to those previously accumulated, and checks these operations. Tape No. 2 is repeated $n-1$ times completing the sum $w_{i,j}$ and then calls back sequence mechanism No. 1 to terminate the computation of $w_{i,j}$ and initiate the formation of the next element of the product matrix.

Thus one revolution of tape No. 1 controlling $n-1$ revolutions of tape No. 2 performs the operation of computing one element $w_{i,j}$. The repetition of tape No. 1 m times multiplies the matrix $[U]_{m,n}$ by the column matrix $[V]_{n,1}$. The class of problems requiring multiplication of a matrix by a column matrix includes:

(a) verification of the solution of a system of simultaneous linear algebraic equations by substituting the computed values of the unknowns in the given equations;

(b) solving such a system by successive approximations.

Alteration of the control quantities and of the arrangement of the input data makes it possible to use the two tapes No. 1 and No. 2 to multiply the square matrix $[U]_{n,n}$ by a diagonal matrix $[V]_{n,n}$. Here the sum of equation (2) reduces to the single term,

$$w_{i,j} = u_{i,j}\, v_{j,j}\,. \tag{3}$$

Each revolution of No. 1 produces one row of the elements $w_{i,j}$, each revolution of No. 2 producing one element. Problems requiring multiplication by a diagonal matrix include:

(a) normalizing a square matrix $[U]$ by multiplying each element in a column by the reciprocal of the diagonal term;

(b) multiplying each equation in a system of simultaneous linear algebraic equations by a constant, such as the reciprocal of the largest element;

(c) forming the matrix $[I-W]$ where $[I]$ is the unit matrix and $[W]$ is normalized as in (a) or (b).

Elements of the input matrices $[U]$ and $[V]$ are introduced into the calculator by two pairs of identical tapes, $u_{i,r}$ and $\bar{u}_{i,r}$ by readers No. 1 and No. 2, and $v_{r,j}$ and $\bar{v}_{r,j}$ by readers No. 3 and No. 4. The pairs of input quantities $u_{i,r}$ and $\bar{u}_{i,r}$ are compared after each read-in in order to detect any error in the punching or the reading of the tapes. The products $u_{i,r}\,v_{r,j}$ and $\bar{u}_{i,r}\bar{v}_{r,j}$ are formed and separately accumulated. The registers in which $w_{i,j}$ and $\bar{w}_{i,j}$ are accumulated are compared after each addition in order to disclose any error in reading $v_{r,j}$ and $\bar{v}_{r,j}$, in the multiplications $u_{i,r}v_{r,j}$ and $\bar{u}_{i,r}\bar{v}_{r,j}$, or in the formation of the sums. Finally, the two sums $w_{i,j}$ and $\bar{w}_{i,j}$ are compared by the check-printing process.

When the matrix $[U]$ is being multiplied by a column matrix, the code-interchange and sign-invert registers are supplied with positive signs, so that operation-code 76 and sign-code 4 are ineffective. Unless printers No. 1 and No. 2 are turned off, they will record the elements of $[U]$. The product matrix $[W]$ ordered by columns is recorded by punches No. 3 and No. 4 and on printer No. 4. If it is desired to record the matrix $[W]$ by rows, the procedure outlined in the operating instructions, page 310, should be followed.

When the input matrix $[V]$ is of the diagonal type, the code-interchange register is supplied with a negative sign, so that operation-code 76 is effective. In this case the quantities routed to printers No. 1 and No. 2 and punches No. 1 and No. 2 are the products defined by operation (3). The elements $v_{j,j}$ and $\bar{v}_{j,j}$ are punched into a pair of endless tapes and placed on readers No. 3 and No. 4. The inputs of punches No. 3 and No. 4 are turned off.

The operating instructions also include the procedures to be followed to obtain either type of normalization or to form the matrix $[I-W]$. In the latter case a negative sign is read to the sign-invert register in order to invert the sign of each product as it is transferred from the multiplication unit to storage.

The control quantities A_1 and A_2 determine the number of repetitions performed by tapes No. 1 and No. 2, respectively. An initially negative check-control quantity B_2 is transferred under the invert code to the check register and later increased by two during each revolution of control tape No. 2. The initial value of B_2 is so chosen that it will still be negative at the beginning of the final repetition of tape No. 2, but will become positive thereafter. Hence if an error in increasing the control quantity A_2 were to permit an extra repetition of the tape, a negative sign arising from the inverted transfer of B_2 would be read into the check register, thus stopping the calculator. A premature recall of mechanism No. 1 will also produce a check stop, since B_2 is read positively to the check register during the fourth cycle of tape No. 1 after sequence mechanism No. 1 has been called back by mechanism No. 2.

Improper functioning of the code-interchange or sign-invert registers themselves is detected by a check similar to that described in Example 2. Two neighboring input registers are set to supply positive and negative signs. The appropriate sign is transferred to the check register during each revolution of both tapes, No. 1 and No. 2, under control of the code-interchange register. Failure of this register to function properly will produce a check stop. The sign in the input register, initially transferred to the sign-invert register, is transferred by each tape to the check register under sign code 4. Failure of the sign-invert register to function properly will thus produce a check stop.

These tapes were designed by Dr. Herbert F. Mitchell,[3] for use in the solution of a problem arising in connection with economic analysis of interindustrial relationships, proposed by Professor Wassily W. Leontief,[4] involving the inversion of a matrix of order 38.[5]

Register List

010	$u_{i,r} - \bar{u}_{i,r}$	054	$\bar{u}_{i,r}$ or $\bar{u}_{i,r}\bar{v}_{r,j}$ (r odd)
011	$0 - \lvert u_{i,r} - \bar{u}_{i,r} \rvert$	055	$u_{i,r}$ or $u_{i,r} v_{r,j}$ (r odd)
022	$u_{i,r} v_{r,j}$	056	A_2
023	$u_{i,r}$	410	partial row sum difference
024	$\bar{u}_{i,r}\bar{v}_{r,j}$	430	$\Sigma u_{i,r} v_{r,j}$
025	$\bar{u}_{i,r}$	432	$\Sigma \bar{u}_{i,r}\bar{v}_{r,j}$
030	$\Sigma u_{i,r} v_{r,j}$	442	B_2
032	$\Sigma \bar{u}_{i,r}\bar{v}_{r,j}$	450	$v_{r,j}$
041	A_1	451	$\bar{v}_{r,j}$
042	A_2	452	$\bar{w}_{i,j}$
050	$u_{i,r}$	453	$w_{i,j}$
051	$\bar{u}_{i,r}$	454	$\bar{u}_{i,r}$ or $\bar{u}_{i,r}\bar{v}_{r,j}$ (r even); $\bar{w}_{i,j}$
052	$\bar{u}_{i,r}$ or $\bar{u}_{i,r}\bar{v}_{r,j}$	455	$u_{i,r}$ or $u_{i,r} v_{r,j}$ (r even); $w_{i,j}$
053	$u_{i,r}$ or $u_{i,r} v_{r,j}$		

A partial list of the storage registers not employed in this problem which may be used for testing are:

001
002
003
004
005
006
007
012
013
014
015
016
017
020
021
026
027
031
033
034
035
036
037
040

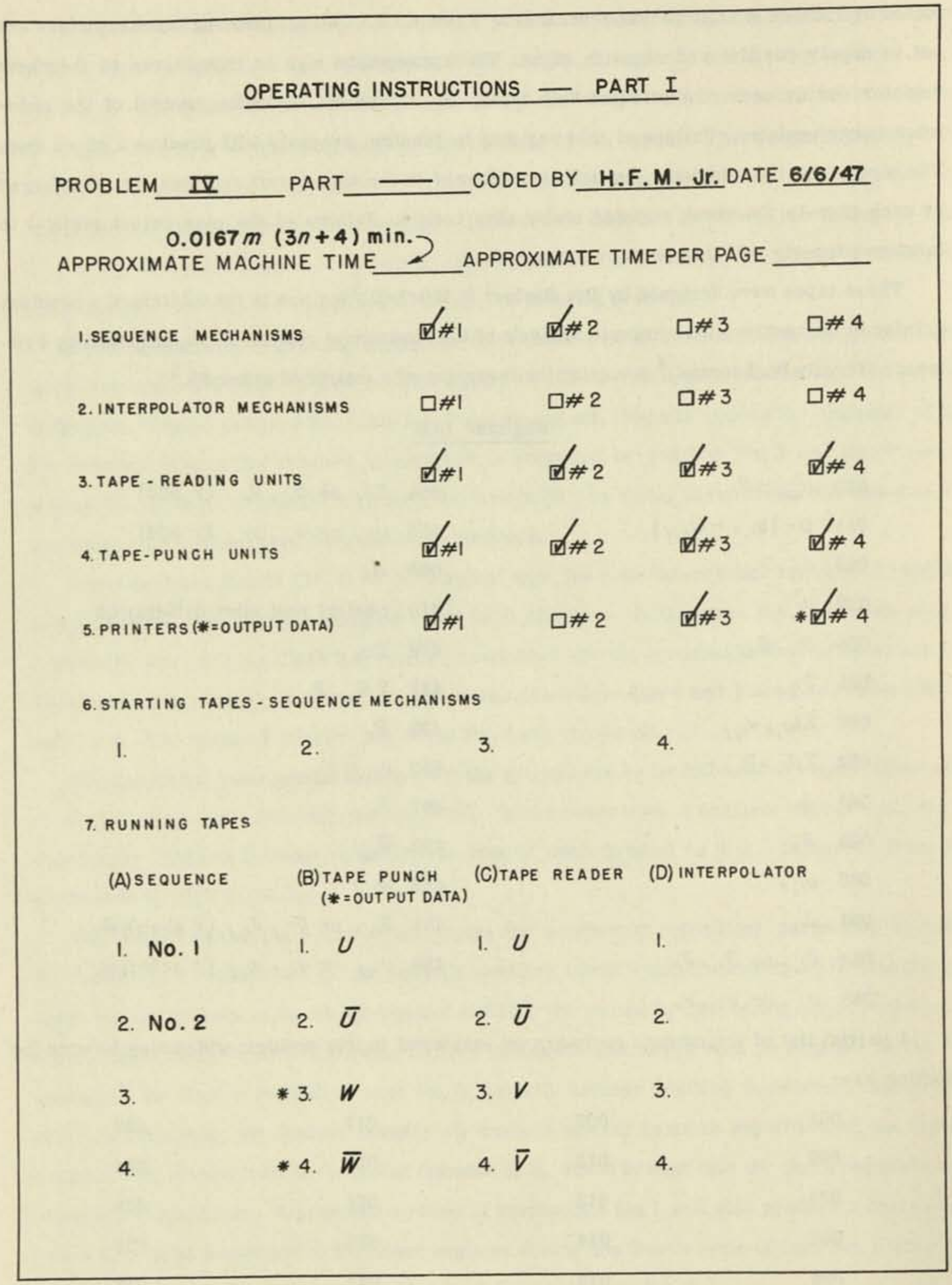

OPERATING INSTRUCTIONS — PART I

PROBLEM IV PART — CODED BY H. F. M. Jr. DATE 6/6/47

APPROXIMATE MACHINE TIME 0.0167m $(3n+4)$ min. APPROXIMATE TIME PER PAGE ______

1. SEQUENCE MECHANISMS ☑ #1 ☑ #2 ☐ #3 ☐ #4

2. INTERPOLATOR MECHANISMS ☐ #1 ☐ #2 ☐ #3 ☐ #4

3. TAPE - READING UNITS ☑ #1 ☑ #2 ☑ #3 ☑ #4

4. TAPE-PUNCH UNITS ☑ #1 ☑ #2 ☑ #3 ☑ #4

5. PRINTERS (*=OUTPUT DATA) ☑ #1 ☐ #2 ☑ #3 *☑ #4

6. STARTING TAPES - SEQUENCE MECHANISMS

1. 2. 3. 4.

7. RUNNING TAPES

(A) SEQUENCE	(B) TAPE PUNCH (*=OUTPUT DATA)	(C) TAPE READER	(D) INTERPOLATOR
1. No. 1	1. U	1. U	1.
2. No. 2	2. $\bar{U}$	2. $\bar{U}$	2.
3.	* 3. W	3. V	3.
4.	* 4. $\bar{W}$	4. $\bar{V}$	4.

Fig. 11.8 - Example 4, operating instructions.

OPERATING INSTRUCTIONS — PART II

SWITCH SETTINGS FOR ☑ LEFT ☐ RIGHT

1. ONE-OR-TWO-PROBLEM SWITCH ☑ 1 PROBLEM ☐ 2 PROBLEMS
2. ONE-OR-TWO-INTERPOLATION SWITCH ☐ 1 INTERPOLATION ☐ 2 INTERPOLATIONS
3. ORDER OF INTERPOLATION ☐ 3RD ORDER ☐ 7TH ORDER
4. INPUT REGISTERS

101 (501)	off	107 (507)	+m = no. of rows in [*U*]
102 (502)	+2.0000 (+0)	110 (510)	
103 (503)	+n = no. of cols. in [*U*]	111 (511)	
104 (504)	+1.0000 (+0)	112 (512)	
105 (505)	-1.0000 (+0)	113 (513)	
106 (506)	+1.0000 (+0)	114 (514)	

5. PRINTER SWITCH SETTINGS:

X = DIGIT S = SPACE

PRINTER NO. 1 (3) TYPE PRINTING ☐ I ☑ II

CHECK PRINTING ☑ ON ☐ OFF LINE GROUPING ☐ 3 ☐ 5 ☐ 6

FUNCTIONAL	ARGUMENT	HORIZONTAL SPACES
±x.xxx s xxx s xxx (±xx)		

PRINTER NO. 2 (4) TYPE PRINTING ☐ I ☑ II

CHECK PRINTING ☐ ON ☐ OFF LINE GROUPING ☐ 3 ☐ 5 ☐ 6

FUNCTIONAL	ARGUMENT	HORIZONTAL SPACES

6. ALARMS

	EXPONENT > +15	EXPONENT < −15
ADDITION UNIT	☑ ON ☐ OFF	☐ ON ☑ OFF
MULTIPLICATION UNIT NO. 1 (3)	☑ ON ☐ OFF	☑ ON ☐ OFF
MULTIPLICATION UNIT NO. 2 (4)	☑ ON ☐ OFF	☑ ON ☐ OFF

EXPONENTIAL: ARGUMENT ≤ −15 ☐ ON ☐ OFF

Fig. 11.8 continued - Example 4, operating instructions.

OPERATING INSTRUCTIONS — PART II

SWITCH SETTINGS FOR ☐ LEFT ☑ RIGHT

1. ONE-OR-TWO-PROBLEM SWITCH ☑ 1 PROBLEM ☐ 2 PROBLEMS
2. ONE-OR-TWO-INTERPOLATION SWITCH ☐ 1 INTERPOLATION ☐ 2 INTERPOLATIONS
3. ORDER OF INTERPOLATION ☐ 3RD ORDER ☐ 7TH ORDER
4. INPUT REGISTERS

101 (501)
102 (502)
103 (503)
104 (504)
105 (505)
106 (506)
107 (507)
110 (510)
111 (511)
112 (512)
113 (513)
114 (514)

5. PRINTER SWITCH SETTINGS:

X = DIGIT S = SPACE

PRINTER NO. 1 (3) TYPE PRINTING ☐ I ☑ II

CHECK PRINTING ☑ ON ☐ OFF LINE GROUPING ☐ 3 ☐ 5 ☐ 6

FUNCTIONAL	ARGUMENT	HORIZONTAL SPACES
±x.xxx s xxx s xxx(±xx)		

PRINTER NO. 2 (4) TYPE PRINTING ☐ I ☑ II

CHECK PRINTING ☑ ON ☐ OFF LINE GROUPING ☐ 3 ☑ 5 ☐ 6

FUNCTIONAL	ARGUMENT	HORIZONTAL SPACES
±x.xxx s xxx s xxx(±xx)		

6. ALARMS

	EXPONENT > +15	EXPONENT < −15
ADDITION UNIT	☑ ON ☐ OFF	☐ ON ☑ OFF
MULTIPLICATION UNIT NO. 1 (3)	☑ ON ☐ OFF	☑ ON ☐ OFF
MULTIPLICATION UNIT NO. 2 (4)	☑ ON ☐ OFF	☑ ON ☐ OFF

EXPONENTIAL: ARGUMENT ≤ −15 ☐ ON ☐ OFF

Fig. 11.8 concluded - Example 4, operating instructions.

PROBLEM PREPARATION

Matrix Product: $[U]_{m,n}\ [V]_{n,1} = [W]_{m,1}$

Preparation of Tapes:

Control Tape 1 is to be punched from the coding given on pages 313-315 and on 319-321. Cycles 1 to 7 are repeated as cycles 8 to 14, in order to provide a tape of suitable length for mounting on the sequence mechanism. Note that cycles 5 and 12 are blank.

Control Tape 2 is to be punched from the coding given on pages 316-318, utilizing the unstarred codes for the print-input registers in cycle 3. Cycles 4 to 6 utilize the same coding, except that the starred codes for the print-input registers are to be employed. In order that the tape may be of suitable length for mounting on the sequence mechanism, cycles 1 to 6 are repeated as cycles 7 to 12.

Input tapes $[U]$ and $[\bar{U}]$ are identical data tapes containing the elements $u_{i,j}$ ($\bar{u}_{i,j}$), by rows, of the pre-factor matrix $[U]_{m,n}$. Each row must contain an additional element $u_{i,n+1}$ ($\bar{u}_{i,n+1}$), which may be any quantity including zero. The tapes should be concluded with a zero to prevent an index hole alarm stop.

Input Tapes $[V]$ and $[\bar{V}]$ are identical data tapes containing the n elements $v_{n,1}$ ($\bar{v}_{n,1}$) of the post-factor matrix $[V]_{n,1}$. Each tape should be endless, so as to repeat itself for each row of $[U]_{m,n}$.

Starting Procedure

Transfer negatively the quantity in I.R.107 to S.R.041 (sign code 1).

Start sequence mechanism No. 1. The elements $w_{i,1}$ will be printed on printer No. 4 and punched into tapes by punches No. 3 and No. 4. Sequence mechanism No. 1 will stop by code upon completion of the computation.

The elements $u_{i,j}$ of matrix $[U]_{m,n}$ may be punched into tapes by punches Nos. 1 and 2 and printed alternately by printers No. 1 and No. 3. These quantities should be punched and printed only if it is desired to reproduce the tapes $[U]$ and $[\bar{U}]$ for use in subsequent computations. If not so desired, inputs to punches Nos. 1 and 2 and to printer No. 1 should be turned off and printer No. 3 itself de-energized. Do not turn off the input to printer No. 3.

The arrangement of the elements $u_{i,j}$ on printers Nos. 1 and 3 merits a brief discussion. Since the three-cycle repetition of the routine of tape 2 is too short to permit continuous printing on a single printer, it is necessary to alternate the prints. The first element $u_{i,1}$ of a row of $[U]$ will always appear on printer No. 1, followed by a blank line. If n is odd, the routine of tape 2 will be repeated an even number of times for each row, so that the odd-column elements will always appear on printer No. 1 and the even-column elements on printer No. 3. However, if n is even, the routine of tape 2 will be repeated an odd number of times for each row. Hence, the order of elements will be as follows: odd rows of $[U]$, odd-column elements on printer No. 1, even-column elements on printer No. 3; even rows of $[U]$, element $u_{i,1}$ and even-column elements on printer No. 1, odd-column elements, except $u_{i,1}$, on printer No. 3. The row sum is typed on No. 3 to permit a double line-feed, thus providing a blank line at the end of the quantities printed for that row.

Matrix Product: $[U]_{m,n}\ [V]_{n,p} = [W]_{m,p}$

If the product matrix $[W]_{m,p}$ is desired with its elements ordered by columns, prepare a series of input tapes $[V]_{n,r}$ and $[\bar{V}]_{n,r}$, one pair for each column, r, of matrix $[V]_{n,p}$, as directed above for tapes $[V]_{n,1}$ and $[\bar{V}]_{n,1}$. Proceed as for the formation of $[W]_{m,1}$ for the case $r=1$. When the input tapes $[U]_{m,n}$ and $[\bar{U}]_{m,n}$ on readers No. 1 and No. 2 have been exhausted, feed the duplicate tapes $[U]_{m,n}$ and $[\bar{U}]_{m,n}$ from punches No. 1 and No. 2 into readers No. 1 and No. 2, respectively, for continuous punch-read operation. Repeat the computation for each value of r $(r=2,3,\dots p)$.

If the product matrix $[W]_{m,p}$ is desired with its elements ordered by rows, prepare two endless input tapes $[V]_{n,p}$ and $[\bar{V}]_{n,p}$ containing all elements, $v_{i,j}$ and $\bar{v}_{i,j}$, ordered by columns. Substitute the following starting procedure: Transfer I.R.101 to S.R.041. Start sequence No. 1, which will stop by code after one iteration. Mark input tapes $[U]_{m,n}$ and $[\bar{U}]_{m,n}$, on readers No. 1 and No. 2, at the reading pins and remove the tape from readers, replacing them with the tapes from punches No. 1 and No. 2, arranged for continuous punch-read operation and read in the first quantity manually. Place $p-1$ in I.R.107 and transfer I.R.107 negatively to S.R.041 (sign code 1). Start sequence No. 1, which will iterate $p-1$ times, completing the first row of product matrix $[W]_{m,p}$. If the product matrix is to be used later as a pre-factor matrix $[U]$, a zero must be supplied as the $p+1$st element of the row. Discard the tapes from punches No. 1 and No. 2 which have been utilized in readers No. 1 and No. 2. Replace tapes $[U]_{m,n}$ and $[\bar{U}]_{m,n}$ on readers No. 1 and No. 2 and read in element preceding the mark. Repeat the foregoing procedure beginning with the operation of transferring I.R.107 to S.R.041, for remaining $m-1$ rows of $[W]_{m,p}$.

Matrix Product: $[V^*]_{n,n}\ [U]_{n,n} = [W]_{n,n}$

(where $[V^*]_{n,n}$ is a diagonal matrix)

Prepare input tapes $[V]_{n,1}$ and $[\bar{V}]_{n,1}$, where the elements $v_{i,1}$ ($\bar{v}_{i,1}$) are the diagonal elements $v_{i,i}$ of matrix $[V^*]_{n,n}$, as described for the formation of product matrix $[W]_{m,1}$. Set I.R. 104 to -1 and I.R.105 to $+1$. Turn off inputs to punches No. 3 and No. 4 and power switch of printer No. 4. Do not turn off inputs to any of the printers. Proceed as directed for the formation of product matrix $[W]_{m,1}$. The output matrix $[W]_{n,n}$ will be punched into tapes, by rows, by punches No. 1 and No. 2, and its elements will be alternately printed on printers No. 1 and No. 3.

If $[W]_{n,n}$ is later to be inverted by the Gauss' elimination method, the preparation of the input tapes should be modified as follows: tapes $[U]_{n,n}$ and $[\bar{U}]_{n,n}$ must contain for element $u_{1,n+1}$ ($\bar{u}_{1,n+1}$) the value unity, for elements $u_{i,n+1}$ ($\bar{u}_{i,n+1}$)(i=2,3,...n) the value zero, and for elements $u_{i,n+2}$ ($\bar{u}_{i,n+2}$)(i=1,2,3...n) any quantity including zero; tapes $[V]_{n,1}$ and $[\bar{V}]_{n,1}$ must contain for element $v_{n+1,1}$ ($\bar{v}_{n+1,1}$) the value unity. In addition I.R.103 must be set to $n+1$.

Matrix Product: $[V^{*}]_{n,n}\ [U]_{n,n} = [W']_{n,n}$

(where $[V^{*}]_{n,n}$ is a diagonal matrix)

Proceed as directed for the formation of product matrix $[W]_{n,n}$, after making the following changes in the control tapes 1 and 2: obliterate the operation code 01 on lines 5 and 10, cycle 3(10), of tape 1 and from lines 13 and 15, cycle 3(6, 9, 12) of tape 2; add to cycle 6(13) of tape 1, on line 2 the code (450)-01 and on line 4 the code (451)-01.

Matrix $[I-W]_{n,n}$ or $[I-W']_{n,n}$

If $[V^{*}]_{n,n}$ is composed of the reciprocals of the diagonal elements of $[U]_{n,n}$, then the derived matrix $[I-W]_{n,n}$ or $[I-W']_{n,n}$ may be formed instead of $[W]_{n,n}$ or $[W']_{n,n}$ by following the procedures prescribed for the formation of the product matrix desired, modified as follows: In preparing the input tapes $[U]_{n,n}$ and $[\bar{U}]_{n,n}$, replace each diagonal element $u_{i,i}$ ($\bar{u}_{i,i}$) with the value zero; set I.R.106 to -1.

Rerun Procedures

Control Tape 1

Cycle 1(8). Right Check (Left Check): control error; code-interchange (sign-invert) register failure. Start sequence mechanism No. 1 at beginning of cycle 1(8).

Cycle 2(9). Right Check Only: input or computation error. Examine S.R.450 and S.R.451. If the quantities are not identical, then error was from v inputs. Consult list of elements $v_{i,1}$ for correct value. Start sequence mechanism No. 1 at beginning of cycle 1(8).

Left and Right Checks: u input error. Examine S.R.050 and S.R.051. If the quantities are not identical, consult list of elements $u_{i,j}$ for correct value. Start sequence mechanism No. 1 at beginning of cycle 1(8).

Print Check Only: Transfer S.R.023-76 to S.R.055, and S.R.025-76 to Reg.054-07. Start sequence mechanism No. 1.

Cycle 4(11). Right Check: control error. Examine reader No. 3 or No. 4; if sequence mechanism No. 1 was correctly called in, the last element, $v_{n,1}$ ($\bar{v}_{n,1}$), should be two places beyond reading pins. If so, start sequence mechanism No. 1. If not, correct control quantity

A_2 , in S.R.042, to equal $(B_2-1)/2$, where B_2 lies in S.R.442. Roll back control tape 1 one cycle. Start sequence mechanism No. 2.

Left Check: Computation error; proceed as for "Left Check, cycle 1, tape 2" below, except that control tape 1 is rolled back one cycle and control tape 2 is rolled back two cycles, and S.R.042 is not corrected.

Cycle 7(14). Print Check: transfer error. Transfer S.R.430 to S.R.454, and S.R.432 to S.R.455-06. If run incomplete, start sequence mechanism No. 1.

Control Tape 2

Cycle 1(4, 7, 10). Right Check: control error; code-interchange register failure. Transfer I.R.104 to C.-I.R.076. If I.R.104 is set to -1, the quantity last printed on printer No. 1 (cycles 4, 10) or printer No. 3 (cycles 1, 7) should have originated in S.R.024. If I.R.104 is set to $+1$, that quantity should have originated in S.R.025. If the correct quantity has been printed, start sequence mechanism No. 2. If the incorrect quantity has been printed, cross out last print and mark tapes on punches No. 1 and No. 2 for correction, and cover index hole, as last entry on each is erroneous. Print and punch the correct quantity. Start sequence mechanism No. 2.

Left Check: computation error. Roll back input tapes on all four readers each two quantities and read in one quantity. Add -1 (3-150) to S.R.042. Add -2 (3-102) to S.R.442. Check for agreement S.R.050-051 and S.R.450-451. Transfer S.R.050 to S.R.023, and S.R.051 to S.R.025. Turn off inputs to printers No. 1 and No. 3 and to punches No. 1 and No. 2. Turn on end-of-problem switch. Roll back control tape three cycles and start sequence mechanism No. 2. On stop at end of three cycles, turn on inputs to printers and punches and turn off end-of-problem switch. Start sequence mechanism No. 2.

Cycle 2(5, 8, 11). Right Check: control error, over-run on error in B_2 . Examine reader No. 3 or No. 4; if sequence mechanism should have been called, the last element $v_{n,1}$ ($\bar{v}_{n,1}$) will be two places beyond the reading pins. If so, roll back control tape No. 2 two cycles and advance control tape 1 to beginning of cycle 7(14); transfer S.R.030 to S.R.430; start sequence mechanism No. 1. If not, make B_2 in S.R.442 equal $2A_2+1$, where A_2 is in S.R.042; start sequence mechanism No. 2.

Left Check: input error, tapes $[U]_{m,n}$ and $[\bar{U}]_{m,n}$. Place correct quantity from list of elements $u_{i,j}$ in S.R.023 and S.R.025. Transfer S.R.030 to S.R.430. Add -2 (3-102) to S.R.442. Roll back control tape 2 one cycle and start sequence mechanism No. 2.

Cycle 3(6, 9, 12). Print Check: computation error. Roll back input tapes on readers No. 3 and No. 4 two quantities each and read in one quantity. Check S.R.450-451 for agreement. Transfer S.R.030 to S.R.430, and S.R.032 to S.R.432. Add -2 (3-102) to S.R.442. Roll back

PROBLEM IV TAPE 1 SECOND 1, 8

LINE	FORMULA	SIGN	OUT	IN	OPER.
1	+1 (or −1 when normalizing) To Aug.R.		104	AUGEND	
2				ADDEND	
3	$u_{i,1}$ to MC.R.		050	MULTIPLICAND 1	
4	$v_{1,j}$ to MP.R.		450	MULTIPLIER 1	
5	+1 (or − 1 when changing signs in matrix) to T.R.		106	TRANSFER	
6	+1 or −1 to Left Code-Interchange R.		SUM	076	
7	$u_{i,1}$ to Aug. R. for transfer		050	AUGEND	
8				ADDEND	
9	$\bar{v}_{1,j}$ to MC.R.		451	MULTIPLICAND 2	
10	$\bar{u}_{i,1}$ to MP.R.		051	MULTIPLIER 2	
11	+1 or −1 to Left Sign Invert R.		TRANSFER	074	
12	$u_{i,1}$ to S.R.023		SUM	023	
13	$\bar{u}_{i,1}$ to T.R.		051	TRANSFER	
14	$\bar{u}_{i,1}$ to S.R.025		TRANSFER	025	
15	+1 to T.R. under control of C-I.R.		104	TRANSFER	76
16	C-I. check to Right Check R.		TRANSFER	473	
17	+1 to T.R. under control of S-I.R.	4	106	TRANSFER	
18	S-I. Check to Left Check R.		TRANSFER	073	
19	$u_{i,1}$ to Aug.R.		023	AUGEND	
20	$-\bar{u}_{i,1}$ to Add.R.	1	025	ADDEND	
21				TRANSFER	
22			TRANSFER		
23	$\pm u_{i,1} v_{1,j}$ to S.R.022	4	PRODUCT 1	022	
24	$u_{i,1}-\bar{u}_{i,1}$ to S.R.010		SUM	010	
25	$-\lvert u_{i,1}-\bar{u}_{i,1}\rvert$ to Aug.R.	3	010	AUGEND	
26	0 to Add.R.			ADDEND	
27	$u_{i,1}$ or $u_{i,1} v_{1,j}$ to T.R.		023	TRANSFER	76
28	$u_{i,1}$ or $u_{i,1} v_{1,j}$ to Print-Input R. No. 2		TRANSFER	055	
29	$\pm\bar{u}_{i,1} \bar{v}_{1,j}$ to S.R.024	4	PRODUCT 2	024	
30	check of $u_{i,1}$ to S.R.011		SUM	011	

Fig. 11.9 - Example 4, cycle 1.

PROBLEM IV TAPE 1 SECOND 2, 9

LINE	FORMULA	SIGN	OUT	IN	OPER.
1	$u_{i,1} v_{1,j}$ to Aug.R.		022	AUGEND	
2	$-\bar{u}_{i,1} \bar{v}_{1,j}$ to Add R.	1	024	ADDEND	
3				MULTIPLICAND I	
4				MULTIPLIER I	
5	$\bar{u}_{i,1}$ or $\bar{u}_{i,1} \bar{v}_{1,j}$ to T.R.		025	TRANSFER	76
6	$u_{i,1} v'_{1,j} - \bar{u}_{i,1} \bar{v}_{1,j}$ to S.R.410		SUM	410	
7	$-\lvert u_{i,1} v_{1,j} - \bar{u}_{i,1} \bar{v}_{1,j} \rvert$ to Aug.R.	3	410	AUGEND	
8	O to Add.R.			ADDEND	
9				MULTIPLICAND 2	
10				MULTIPLIER 2	
11	check print $\bar{u}_{i,1}$ or $\bar{u}_{i,1} \bar{v}_{1,j}$ on Printer No. 1		TRANSFER	054	07
12	check of $u_{i,1} v_{1,j}$ to Right Check R.		SUM	473	
13	check of $u_{i,1}$ to T.R.		011	TRANSFER	
14	check of $u_{i,1}$ to Left Check R.		TRANSFER	073	
15	$u_{i,1} v_{1,j}$ to T.R.		022	TRANSFER	
16	$u_{i,1} v_{1,j}$ to partial row sum, S.R. 430		TRANSFER	430	
17	$\bar{u}_{i,1} \bar{v}_{1,j}$ to T.R.		024	TRANSFER	
18	$\bar{u}_{i,1} \bar{v}_{1,j}$ to $\overline{\text{partial}}$ $\overline{\text{row}}$ $\overline{\text{sum}}$, S.R. 432		TRANSFER	432	
19	$-n$ to Aug.R.	1	103	AUGEND	
20	$-n$ to Add.R.	1	103	ADDEND	
21				TRANSFER	
22			TRANSFER		
23			PRODUCT I		
24	$-2n$ to S.R.442		SUM	442	
25	$-2n$ to Aug.R.		442	AUGEND	
26	+2 to Add.R.		102	ADDEND	
27				TRANSFER	
28			TRANSFER		
29			PRODUCT 2		
30	$2-2n$ to S.R.442		SUM	442	

Fig. 11.9 continued - Example 4, cycle 2.

PROBLEM IV TAPE 1 SECOND 3.10

LINE	FORMULA	SIGN	OUT	IN	OPER.
1				AUGEND	
2	step Tape-Reader No. 1		050	ADDEND	01
3				MULTIPLICAND 1	
4	step Tape-Reader No. 2		051	MULTIPLIER 1	01
5	step Tape-Reader No. 3		450	TRANSFER	01
6			SUM		
7	$(A_1)_{j-1}$ to Aug.R.; start Seq. Mech. No. 2		041	AUGEND	67
8	1 to Add.R.; stop Seq. Mech. No. 1		150	ADDEND	73
9				MULTIPLICAND 2	
10	step Tape-Reader No. 4		451	MULTIPLIER 2	01
11			TRANSFER		
12	$(A_1)_j$ to S.R.041		SUM	041	
13	$\bar{u}_{i,1}$ $(\bar{u}_{i,1}\ \bar{v}_{1,j})$ to T.R.		054	TRANSFER	
14	$\bar{u}_{i,1}$ $(\bar{u}_{i,1}\ \bar{v}_{1,j})$ to S.R.052		TRANSFER	052	
15	$u_{i,1}$ $(u_{i,1}\ v_{1,j})$ to T.R.		055	TRANSFER	
16	$u_{i,1}$ $(u_{i,1}\ v_{1,j})$ to S.R.053		TRANSFER	053	
17				TRANSFER	
18			TRANSFER		
19	$-n$ to Aug.R.	1	103	AUGEND	
20	1 to Add.R.		150	ADDEND	
21				TRANSFER	
22			TRANSFER		
23			PRODUCT 1		
24	$(A_2)_{j-1} = 1-n$ to S.R.042		SUM	042	
25	$2-2n$ to Aug.R.		442	AUGEND	
26	1 to Add.R.		550	ADDEND	
27	$(A_2)_{j-1}$ to T.R.		042	TRANSFER	
28	$(A_2)_{j-1}$ to Read-out Lights		TRANSFER	056	
29			PRODUCT 2		
30	$B_2 = 3-2n$ to S.R.442		SUM	442	

Fig. 11.9 continued - Example 4, cycle 3.

PROBLEM IV TAPE 2 SECOND 1, 4, 7, 10

LINE	FORMULA	SIGN	OUT	IN	OPER.
1				AUGEND	
2				ADDEND	
3				MULTIPLICAND 1	
4				MULTIPLIER 1	
5				TRANSFER	
6			SUM		
7				AUGEND	
8				ADDEND	
9				MULTIPLICAND 2	
10				MULTIPLIER 2	
11			TRANSFER		
12			SUM		
13	+1 to T.R.		104	TRANSFER	76
14	code-interchange check to Right Check R.		TRANSFER	473	
15	$\bar{u}_{i,r-1}$ or $\bar{u}_{i,r-1}\ \bar{v}_{r-1,j}$ to T.R.; end of page stop		052	TRANSFER	75
16	$\bar{u}_{i,r-1}$ or $\bar{u}_{i,r-1}\ \bar{v}_{r-1,j}$ to Punch No. 1; punch		TRANSFER	052	01
17	$u_{i,r}$ to T.R.; read from Reader No. 1		050	TRANSFER	01
18	$u_{i,r}$ to S.R.023		TRANSFER	023	
19	$(A_2)_{i-1}$ to Aug.R.		042	AUGEND	
20	1 to Add.R.		150	ADDEND	
21	$\bar{u}_{i,r}$ to T.R.; read from Reader No. 2		051	TRANSFER	01
22	$\bar{u}_{i,r}$ to S.R.025		TRANSFER	025	
23			PRODUCT 1		
24	$(A_2)_i$ to S.R.042		SUM	042	
25				AUGEND	
26				ADDEND	
27	$u_{i,r-1}$ or $u_{i,r-1}\ v_{r-1,j}$ to T.R.		053	TRANSFER	
28	$u_{i,r-1}$ or $u_{i,r-1}\ v_{r-1,j}$ to Punch No. 2; punch		TRANSFER	053	01
29			PRODUCT 2		
30			SUM		

Fig. 11.9 continued - Example 4, cycle 4.

PROBLEM IV TAPE 2 SECOND 2, *5, 8, *11

LINE	FORMULA	SIGN	OUT	IN	OPER.
1	$u_{i,r}$ to Aug.R.		023	AUGEND	
2	$-\bar{u}_{i,r}$ to Add.R.	1	025	ADDEND	
3	$u_{i,r}$ to MC.R.		023	MULTIPLICAND 1	
4	$v_{r,j}$ to MP.R.		450	MULTIPLIER 1	
5	$-B_2$ to T.R.	1	442	TRANSFER	
6	$u_{i,r}-\bar{u}_{i,r}$ to S.R.010		SUM	010	
7	$-\lvert u_{i,r}-\bar{u}_{i,r}\rvert$ to Aug.R.	3	010	AUGEND	
8	0 to Add.R.			ADDEND	
9	$\bar{v}_{r,j}$ to MC.R.		451	MULTIPLICAND 2	
10	$\bar{u}_{i,r}$ to MP.R.		025	MULTIPLIER 2	
11	B_2 = overdue call check to Right Check R.		TRANSFER	473	
12	check of $u_{i,r}$ to Left Check R.		SUM	073	
13	(partial row sum)$_{r-1}$ to T.R.		430	TRANSFER	
14	(partial row sum)$_{r-1}$ to S.R.030		TRANSFER	030	
15	$\overline{(\text{partial row sum})}_{r-1}$ to T.R.		432	TRANSFER	
16	$\overline{(\text{partial row sum})}_{r-1}$ to S.R.032		TRANSFER	032	
17				TRANSFER	
18			TRANSFER		
19	$(B_2)_i$ to Aug.R.		442	AUGEND	
20	+2 to Add.R.		102	ADDEND	
21	A_2 to T.R.		042	TRANSFER	
22	A_2 to Start-Stop R.		TRANSFER	075	
23	$\pm u_{i,r}\, v_{r,j}$ to S.R.022	4	PRODUCT 1	022	
24	$(B_2)_{i+1}$ to S.R.442		SUM	442	
25	$\pm u_{i,r}\, v_{r,j}$ to Aug. R.		022	AUGEND	
26	(partial row sum)$_{r-1}$ to Add.R.		030	ADDEND	
27	$u_{i,j}$ or $\pm u_{i,r}\, v_{r,j}$ to T.R.		023	TRANSFER	76
28	$u_{i,j}$ or $\pm \bar{u}_{i,r}\, \bar{v}_{r,j}$ to Print-Input R. No.4 (*No.2)		TRANSFER	455, *055	
29	$\pm \bar{u}_{i,r}\, \bar{v}_{r,j}$ to S.R.024	4	PRODUCT 2	024	
30	(partial row sum)$_r$ to S.R.430		SUM	430	

Fig. 11.9 continued - Example 4, cycle 5.

PROBLEM IV TAPE 2 SECOND 3, *6, 9, *12

LINE	FORMULA	SIGN	OUT	IN	OPER.
1	($\overline{\text{partial}}$ $\overline{\text{row}}$ $\overline{\text{sum}}$)$_{r-1}$ to Aug.R.		032	AUGEND	
2	$\bar{u}_{i,r}\,\bar{v}_{r,j}$ to Add R.		024	ADDEND	
3				MULTIPLICAND I	
4				MULTIPLIER I	
5	$\bar{u}_{i,r}$ or $\bar{u}_{i,r}\,\bar{v}_{r,j}$ to T.R.		025	TRANSFER	76
6	($\overline{\text{partial}}$ $\overline{\text{row}}$ $\overline{\text{sum}}$)$_r$ to S.R.432 Seq.Mech.No.1 cond.start		SUM	432	70
7	(partial row sum)$_r$ to Aug.R. Seq.Mech.No.1 cond.stop		430	AUGEND	74
8	−($\overline{\text{partial}}$ $\overline{\text{row}}$ $\overline{\text{sum}}$)$_r$	1	432	ADDEND	
9				MULTIPLICAND 2	
10				MULTIPLIER 2	
11	check print $\bar{u}_{i,r}$ or $\bar{u}_{i,r}\,\bar{v}_{r,j}$ on Printer No. 3(*No. 1)		TRANSFER	454, *054	06
12	partial row sum difference to S.R.410		SUM	410	
13	$v_{r,j}$ to T.R.; read from Reader No. 3		450	TRANSFER	01
14			TRANSFER		
15	$v_{r,j}$ to T.R.; read from Reader No. 4		451	TRANSFER	01
16			TRANSFER		
17	±1 to T.R.	4	106	TRANSFER	
18	Sign-Invert Check to Right Check R.		TRANSFER	473	
19	− | partial row sum difference | to Aug.R.	3	410	AUGEND	
20	0 to Add.R.			ADDEND	
21	$\bar{u}_{i,r}$ ($\bar{u}_{i,r}\,\bar{v}_{r,j}$) to T.R.		454 *054	TRANSFER	
22	$\bar{u}_{i,r}$ ($\bar{u}_{i,r}\,\bar{v}_{r,j}$) to S.R.052		TRANSFER	052	
23			PRODUCT I		
24	partial row sum check to Left Check R.		SUM	073	
25	A_2 to Aug.R. for transfer		042	AUGEND	
26				ADDEND	
27	$u_{i,r}$ ($u_{i,r}\,v_{r,j}$) to T.R.		455 *055	TRANSFER	
28	$u_{i,r}$ ($u_{i,r}\,v_{r,j}$) to S.R.053		TRANSFER	053	
29			PRODUCT 2		
30	A_2 to Read-out Lights		SUM	056	

Fig. 11.9 continued - Example 4, cycle 6.

PROBLEM IV TAPE 1 SECOND 4, 11

LINE	FORMULA	SIGN	OUT	IN	OPER.
1				AUGEND	
2				ADDEND	
3				MULTIPLICAND I	
4				MULTIPLIER I	
5				TRANSFER	
6			SUM		
7				AUGEND	
8				ADDEND	
9				MULTIPLICAND 2	
10				MULTIPLIER 2	
11			TRANSFER		
12			SUM		
13	B_2 to T.R.		442	TRANSFER	75
14	B_2 = premature call check to Right Check R.		TRANSFER	473	
15				TRANSFER	
16			TRANSFER		
17				TRANSFER	
18			TRANSFER		
19				AUGEND	
20				ADDEND	
21				TRANSFER	
22			TRANSFER		
23			PRODUCT I		
24			SUM		
25				AUGEND	
26				ADDEND	
27				TRANSFER	
28			TRANSFER		
29			PRODUCT 2		
30	NOTE: Cycles 5 and 12 are blank.		SUM		

Fig. 11.9 continued - Example 4, cycle 7.

PROBLEM IV TAPE 1 SECOND 6, 13

LINE	FORMULA	SIGN	OUT	IN	OPER.
1				AUGEND	
2				ADDEND	
3				MULTIPLICAND 1	
4				MULTIPLIER 1	
5	$u_{i,n}$ or $u_{i,n} v_{n,j}$ to T.R.		052	TRANSFER	
6			SUM		
7				AUGEND	
8				ADDEND	
9				MULTIPLICAND 2	
10				MULTIPLIER 2	
11	$u_{i,n}$ or $u_{i,n} v_{n,j}$ to Tape Punch No. 1; punch		TRANSFER	052	01
12			SUM		
13	$\bar{u}_{i,n}$ or $\bar{u}_{i,n} \bar{v}_{n,j}$ to T.R.		053	TRANSFER	
14	$\bar{u}_{i,n}$ or $\bar{u}_{i,n} \bar{v}_{n,j}$ to Tape Punch No. 2; punch		TRANSFER	053	01
15	$u_{i,n+1}$ to T.R.; read from Reader No. 1		050	TRANSFER	01
16			TRANSFER		
17	$\bar{u}_{i,n+1}$ to T.R.; read from Reader No. 2		051	TRANSFER	01
18			TRANSFER		
19				AUGEND	
20				ADDEND	
21				TRANSFER	
22			TRANSFER		
23			PRODUCT 1		
24			SUM		
25				AUGEND	
26				ADDEND	
27				TRANSFER	
28			TRANSFER		
29			PRODUCT 2		
30			SUM		

Fig. 11.9 continued - Example 4. cycle 8.

PROBLEM IV TAPE 1 SECOND 7,14

LINE	FORMULA	SIGN	OUT	IN	OPER.
1				AUGEND	
2				ADDEND	
3				MULTIPLICAND 1	
4				MULTIPLIER 1	
5	row sum to T.R.		430	TRANSFER	
6			SUM		
7	$\overline{\text{row}}$ $\overline{\text{sum}}$ to Aug.R. for transfer		432	AUGEND	
8				ADDEND	
9				MULTIPLICAND 2	
10				MULTIPLIER 2	
11	row sum to Print-Input R. No. 3		TRANSFER	454	
12	check print $\overline{\text{row}}$ $\overline{\text{sum}}$ on Printer No. 4		SUM	455	06
13	$(A_1)_j$ to T.R.		041	TRANSFER	
14	$(A_1)_j$ to Start-Stop R.		TRANSFER	075	
15	row sum to T.R.		454	TRANSFER	
16	row sum to Tape Punch No. 3; punch		TRANSFER	452	01
17	$\overline{\text{row}}$ $\overline{\text{sum}}$ to T.R.; Seq. Mech. No. 1 cond. stop		455	TRANSFER	74
18	$\overline{\text{row}}$ $\overline{\text{sum}}$ to Tape Punch No. 4; punch		TRANSFER	453	01
19				AUGEND	
20				ADDEND	
21	row sum to T.R.		454	TRANSFER	
22	row sum to Tape Punch No. 1; punch		TRANSFER	052	01
23			PRODUCT 1		
24			SUM		
25	row sum to Aug. R. for transfer		454	AUGEND	
26				ADDEND	
27	$\overline{\text{row}}$ $\overline{\text{sum}}$ to T.R.		455	TRANSFER	
28	$\overline{\text{row}}$ $\overline{\text{sum}}$ to Tape Punch No. 2; punch		TRANSFER	053	01
29			PRODUCT 2		
30	Check print row on Printer No. 3		SUM	454	07

Fig. 11.9 concluded - Example 4, cycle 9.

control tape 2 two cycles and start sequence mechanism No. 2.

Right Check: control error, sign-invert register failure. Transfer I.R.106 to S.-I.R.074. Read quantity in S.R.022 to T.R. and from T.R. to S.R.022 under sign-code 4. Read quantity in S.R.024 to T.R. and from T.R. to S.R.024 under sign-code 4. Add S.R.022 to S.R.030. Scratch last print on printer No. 3 (cycle 3 or 9) or No. 1 (cycle 6 or 12). Roll back tapes on readers No. 3 and No. 4 one quantity; do not read in that quantity manually. Roll back control tape 2 one cycle. Start sequence mechanism No. 2.

REFERENCES

1. "A Manual of Operation for the Automatic Sequence Controlled Calculator," Annals of the Computation Laboratory of Harvard University, vol. 1, Cambridge, Mass., 1946, pp. 292-304.
2. James B. Scarborough, Numerical Mathematical Analysis, Baltimore, Md., 1930, pp. 225-227 and 267-273.
3. Herbert F. Mitchell, Jr., The Application of Large-Scale Digital Calculators to the Solution of Simultaneous Linear Systems, Doctoral Thesis, Harvard University, Cambridge, Mass., 1948.
4. Wassily W. Leontief, Computational Problems Arising in Connection with Economic Analysis of Interindustrial Relationships, "Proceedings of a Symposium on Large-Scale Digital Calculating Machinery," Annals of the Computation Laboratory of Harvard University, vol. 16, Cambridge, Mass., 1948, pp. 169-175.
5. Herbert F. Mitchell, Jr., "Inversion of a Matrix of Order 38," Mathematical Tables and other Aids to Computation, vol. 3 (1948), pp. 161-166.

APPENDIX I

LIST OF CODES

The out-codes and in-codes for the right side of the calculator may be obtained from those for the left side by adding 400. Identical sign-codes are employed for both sides of the machine. The operation-codes are, in general, the same for both sides, the important exceptions being: those codes producing eight line feeds on printers No. 3 and No. 4 and those resetting the vertical space counters of the same printers; the code for starting the right interpolator motors when performing two interpolations under the one-problem condition of operation; and, all the codes employed in the functional units, except operation-code 57. When a code applies to only one side of the machine, it will be followed by a letter indicating the side of the calculator on which it is used. It will be assumed that the quantity x is transferred or operated upon by any code unless otherwise indicated.

Sign-Codes		
1	$-x$	read negative value
2	$+\|x\|$	read positive absolute value
3	$-\|x\|$	read negative absolute value
4	$+\frac{a}{\|a\|}x$	sign-controlled read-out; a stands in sign-invert register

Left Storage Registers, In- and Reset-Codes						
	010	020	030	040	050	060
001	011	021	031	041	051	061
002	012	022	032	042	052	062
003	013	023	033	043	053	
004	014	024	034	044	054	
005	015	025	035	045	055	
006	016	026	036	046	056	
007	017	027	037	047		

Left Storage, Functional, and Sign-Control Registers, In- and Reset-Codes

Register	In- and Reset-Code	Accompanied by Operation-Code	Operation	Time Required in Seconds	Page
Argument	037	22	read x into argument register, position interpolators, and read out 4 or 8 values	3rd order 7.4 7th order 8.0	195, 201
Punch No. 1	052	01	read x into punch register, punch x into tape, and step tape	1.5	227
Punch No. 2	053				
			read x into print-input register		
		02	print argument, and space	4.0	
		03	print argument, carriage return, and single line feed	4.0	
Printer No. 1	054	04	print argument, carriage return, and double line feed	4.0	231
Printer No. 2	055	05	print function, and space	4.0	
		06	print function, carriage return, and single line feed	4.0	
		07	print function, carriage return, and double line feed	4.0	
Left Cross	056L		read in x under control of left mechanism		58
	457R		read in x under control of right mechanism		58
Right Cross	057L		read in x under control of left mechanism		58
	456R		read in x under control of right mechanism		58
Sensing	060	57	read into sensing register and set up auxiliary relays for approximations used in 10^x, $\cos x$, and $\arctan x$	2 lines of coding	178, 185, 189

LIST OF CODES

Left Storage, Functional, and Sign-Control Registers, In- and Reset-Codes - continued.

Register	In- and Reset-Code	Accompanied by Operation-Code	Operation	Time Required in Seconds	Page
Times-two, Times-five	061	57	read into sensing register and set up auxiliary relays to read out two and five multiples	2 lines of coding	62
Times-two, Times-five	061	57, 47L, 50R	read into sensing register and set up auxiliary relays to select K-relay and k -values	2 lines of coding	153, 166, 172
Sensing	062	57	read into sensing register and set up auxiliary relays for approximations used in $1/x$, $1/\sqrt{x}$, and $\log_{10} x$	2 lines of coding	153, 166, 172
Check	073		read in x ; if x is negative, stop the calculator		61
Sign-Invert	074		read in a ; under control of sign-code 4, multiply by -1 if a is negative		54, 58
Start-Stop	075	70	if x is positive, start other mechanism on the same side		61, 129
		two lines later 74	if x is positive, stop operating mechanism		61, 129, 142
Code-Interchange	076	two lines later 76	if x is negative, read even code as next higher odd code, read odd code as next lower even code		58, 135

Left Input Registers, Out-codes

101
102
103
104
105
106
107
110
111
112
113
114

Left Storage Registers, Out-Codes

001
002
003
004
005
006
007
010
011
012
013
014
015
016
017
020
021
022
023
024
025
026
027
030
031
032
033
034
035
036
037
040
041
042
043
044
045
046
047
050
051
052
053
054
055
056
060
061
062

Left Storage and Functional Registers, Out-Codes

Register	Out-Code	Accompanied by Operation-Code	Operation		Time Required in Seconds	Page
			3rd order	7th order		
Interpolation Storage	040	preceded by 22	f_{-1}	f_{-3}	3rd order 7.4 7th order 8.0	195, 212
	041		f_0	f_{-2}		
	042		f_1	f_{-1}		
	043		f_2	f_0		
	044			f_1		
	045			f_2		
	046			f_3		
	047			f_4		
Reader No. 1	050	01	read out x from read register, read in value from tape, and step tape		1.5	223
Reader No. 2	051					
Left Cross	056L		read out x under control of left mechanism			57
	457R		read out x under control of right mechanism			57
Right Cross	057L		read out x under control of left mechanism			57
	456R		read out x under control of right mechanism			57

Left Storage, Functional, and Constant Registers, Out-Codes

Register or Function	Out-Code	Preceding Operation-Code	Immediately Preceding Operation-Code	Quantity Read Out	Page Reference
Times-two, Times-five	121	57	43L, 44R	$2x$	62
Times-two, Times-five	122	57	43L, 44R	$5x$	62
Argument 037	123			integral part of coded argument x	198
Constant	124			$1/360 = 2.7777\ 77778 \times 10^{-3}$	54, 185
Constant	125			$1/2 = 5.0000\ 00000 \times 10^{-1}$	54, 199
Cosine 060	126		55L, 56R	ϵ	183
Reciprocal, Logarithm 061	127	57, 47L, 50R		$\bar{x} = k_1 x$	153, 172
Reciprocal Square Root 061	127	57, 47L, 50R	45L, 46R	$\bar{x} = k_1 x 10^{k_2}$	166
Reciprocal, Reciprocal Square Root, Logarithm 062	130	57, 47L, 50R	51L, 52R	$z \approx 1/\bar{x}$	153, 166, 172
Reciprocal Square Root, coefficients of series	131			$a_1 = -4.9999\ 99403 \times 10^{-1}$	54, 163
	132			$a_2 = 3.7500\ 00000 \times 10^{-1}$	
	133			$a_3 = -3.1277\ 10000 \times 10^{-1}$	
	134			$a_4 = 2.7344\ 00000 \times 10^{-1}$	
Reciprocal Square Root 062	135	57, 47L, 50R	51L, 52R	$\sqrt{z} \approx 1/\sqrt{\bar{x}}$	167
Reciprocal Square Root 061	136	57, 47L, 50R		$k_3\sqrt{z}$	166
Reciprocal Square Root 061	137	57, 47L, 50R		$\sqrt{k_4}$	167

Left Storage, Functional, and Constant Registers, Out-Codes, continued

Register or Function	Out-Code	Preceding Operation-Code	Immediately Preceding Operation-Code	Quantity Read Out	Page Reference
Logarithm, coefficients of series	141 142 143 144			$b_1 = 4.3429\ 44608 \times 10^{-1}$ $b_2 = -2.1714\ 72410 \times 10^{-1}$ $b_3 = 1.4486\ 04900 \times 10^{-1}$ $b_4 = -1.0857\ 40000 \times 10^{-1}$	54, 172
Logarithm 061	145	57, 47L, 50R		j	174
Logarithm 062	146	57, 57L, 50R	51L, 52R	$\log_{10} Z$	174
Logarithm 061	147	57, 47L, 50R		k_5	174
Constant	150			1.0000 00000	54, 155
Exponential, coefficients of series	151 152 153 154 155 156			$c_1 = 2.3025\ 85100$ $c_2 = 2.6509\ 49060$ $c_3 = 2.0346\ 72634$ $c_4 = 1.1712\ 52699$ $c_5 = 5.4057\ 44930 \times 10^{-1}$ $c_6 = 2.0738\ 78000 \times 10^{-1}$	55, 178
Exponential 060	157	57		$q + 0.1p$	178, 182
Exponential 060	160	57 + out-code 157L 557R		$10^{(q+0.1p)}$	

Left Storage, Functional, and Constant Registers, Out-Codes, concluded

Register or Function	Out-Code	Preceding Operation-Code	Immediately Preceding Operation-Code	Quantity Read Out	Page Reference
Cosine, coefficients of series	161			$d_2 = -4.9348\ 02200$	55, 183
	162			$d_4 = 4.0587\ 12114$	
	163			$d_6 = -1.3352\ 61944$	
	164			$d_8 = 2.3530\ 51916 \times 10^{-1}$	
	165			$d_{10} = -2.5445\ 09621 \times 10^{-2}$	
Constant	166			$1/2\pi = 1.5915\ 49431 \times 10^{-1}$	185
Cosine 060	167		55L, 56R	x' integral part of argument x	185
Cosine 060	170		55L, 56R	$-c$, argument correction	185
Arctangent, coefficients of series	171			$f_1 = 9.9999\ 99948 \times 10^{-1}$	55, 189
	172			$f_3 = -3.3332\ 73100 \times 10^{-1}$	
	173			$f_5 = 1.9826\ 47000 \times 10^{-1}$	
Arctangent	174	57	53L, 54R	arc tan B	189
Arctangent	175	57	53L, 54R	B	189
Constant	176			$\pi/2 = 1.5707\ 96327$	55, 189

Operation-Codes			
Operation-Code	Conditions	Operation	Page
01	accompanying out-codes 050, 051	read out of read register, read value from tape to read register, and step tape	223
	accompanying in-codes 052, 053	read into punch register, punch value in tape, and step tape	227
02	accompanying in-codes 054, 055	read into print-input register, print argument, and space	234
03		read into print-input register, print argument, carriage return, and single line feed	
04		read into print-input register, print argument, carriage return and double line feed	
05		read into print-input register, print function, and space	
06		read into print-input register, print function, carriage return, and single line feed	
07		read into print-input register, print function, carriage return, and double line feed	
10		Printer No. 1 eight line feeds	234
11		Printer No. 2	
12		Printer No. 3	
13		Printer No. 4	
14		Printer No. 1 reset vertical space counter	234
15		Printer No. 2	
16		Printer No. 3	
17		Printer No. 4	
20	precedes read-in to argument register 037 by one second	one interpolation, start all four interpolator mechanisms; two interpolations, start two left mechanisms	199
21	precedes read-in to argument register 437 by one second	two interpolations, start two right mechanisms	199
22	accompanying in-code (037)	start tape positioning and reading	195, 198, 201

Operation-Codes, continued

Operation-Code	Conditions	Operation	Page
43L 44R	following in-code (061) and operation-code 57; immediately preceding out-codes (121), (122)	position relays to read out $2x$ and $5x$	62
45L 46R	following operation-code 47L, 50R by at least two lines; immediately preceding out-code (127)	position relays to read out $\bar{x} = k_1 x 10^{k_2}$ from register 061, reciprocal square root	166
47L 50R	following operation-code 57; preceding out-codes (127), (130), (135), (136), (137), (145), (146), (147) by at least two lines	position relays to read out $\bar{x} = k_1 x$ from register 061, reciprocal; $\bar{x} = k_1 x 10^{k_2}$, $k_3\sqrt{Z}$, and $\sqrt{k_4}$ from register 061, reciprocal square root; $\bar{x} = k_1 x$, j, k_5 from register 061, logarithm; position relays to read out $z \approx 1/\bar{x}$, $\sqrt{z} \approx 1/\sqrt{\bar{x}}$, and $\log_{10} Z$ from register 062, reciprocal, reciprocal square root, and logarithm	153, 166, 172, 174, 193
51L 52R	following operation-code 47L, 50R by at least two lines; immediately preceding out-codes (130), (135), (146)	position relays to read out $z \approx 1/\bar{x}$, $\sqrt{z} \approx 1/\sqrt{\bar{x}}$, and $\log_{10} Z$ from register 062, reciprocal, reciprocal square root, and logarithm	153, 166, 174
53L 54R	following operation-code 57 by at least two lines; immediately preceding out-codes (174), (175)	position relays to read out $\mathrm{arc\ tan}\ B$ and B from register 060, arc tangent	189
55L 56R	immediately preceding out-codes (126), (167) (170)	position relays to read out ϵ, x', and $-c$ from register 060, cosine	185
57	accompanying read-ins to registers 060, 061, and 062 when used in functional computations	positions auxiliary relays on register 060, 061 and 062 to permit reading-out multiples and approximations	62, 153, 166, 172, 193
67		start other mechanism on same side	129
70	follows in-code (075) by at least two lines	if x is positive, start other mechanism on same side	61, 129
71		cross start, start mechanism on other side, mechanism No. 1 or No. 4	129
72		cross start, start mechanism on other side, mechanism No. 2 or No. 3	129
73		stop operating mechanism	129
74	follows in-code (075) by at least two lines	if x is positive, stop operating mechanism	61, 129

Operation-Codes, concluded

Operation-Code	Conditions	Operation	Page
75		if end-of-problem stop switch is turned on, stop calculator	143
76	follows in-code (076) by at least two lines	if x is negative, read even code as next higher odd code, read odd code as next lower even code	58, 135

Operation	In- and Reset-Codes	Out-Codes	Operation-Codes
Sign-Controls (Sign-Codes 1, 2, 3, 4)	073, 074, 075, 076		70, 74, 76
Starting and Stopping	075		67, 70, 71, 72, 73, 74, 75
Functional Units			
Reciprocal	061, 062	127, 130, 150	57, 47L, 50R, 51L, 52R
Reciprocal Square Root	061, 062	127, 130, 131, 132, 133, 134, 135, 136, 137, 150	57, 47L, 50R, 45L, 46R, 51L, 52R
Logarithm	061, 062	127, 130, 141, 142, 143, 144, 145, 146, 147, 150	57, 47L, 50R, 51L, 52R
Exponential	060	151, 152, 153, 154, 155, 156, 157, 160	57
Cosine	060	124, 126, 161, 162, 163, 164, 165, 166, 167, 170	55L, 56R
Arctangent	060	171, 172, 173, 174, 175, 176	57, 53L, 54R
Times-two, Times-five	061	121, 122	57, 43L, 44R
Interpolation	037	040, 041, 042, 043, 044, 045, 046, 047, 123	20, 21, 22
Tape-Reading		050, 051	01
Tape-Punching	052, 053		01
Printing	054, 055		02, 03, 04, 05, 06, 07, 10, 11, 12, 13, 14, 15, 16, 17
Checking	073		

APPENDIX II

THE METHOD OF ROUND-OFF

In the operation of automatic calculating machinery having a fixed decimal point location, serious error may arise from the subtraction of nearly equal quantities or from the accumulation of a sum which exceeds the columnar capacity of the registers of the machine. To safeguard the computed results from errors of this kind, it is customary to compare the absolute magnitude of each questionable sum or difference with a previously assigned positive tolerance in a suitable check register designed to stop the calculator and warn the operator whenever a sum or difference falls out of bounds.

So far as the adding and storage registers of a fixed decimal point calculator are concerned, the location of the operating decimal point is immaterial. Hence, flexibility may be provided by constructing a multiplication unit having a product register with a columnar capacity twice that of the storage registers together with suitable manual controls so that the $2n$th column of the product register may be connected to the nth column of the number transfer buss leading to the storage system. This construction permits the decimal point to be fixed at any desired position within the capacity of the machine before the computation is started.

Machines having the foregoing characteristics have two distinct advantages. First, their adding registers, being independent of the location of the operating decimal point, can be expected to function without the introduction of error, excepting the case in which differences or sums fall out of bounds, as previously mentioned. Second, provision of a means for independently reading quantities out of the lower and upper halves of the product register, together with a suitable means for storing carry arising in the highest order column of the adding register, enables the machine to operate at double or higher accuracy. In this case, quantities may be stored across two or more storage registers, and sums and products obtained by repeated use of the addition and multiplication units operating under suitable automatic controls.

The fixed decimal point calculator has, however, two disadvantages. First, an upper bound must be placed on all quantities likely to arise in a computation, and the most desirable location of the decimal point must be determined before the machine is started. This may require considerable effort. Second, the fixed decimal point calculator makes inefficient use of its storage system, and hence is uneconomical.

Machines like the present relay calculator largely overcome these disadvantages, and, due to the use of the floating decimal point, have the further inherent advantage that the relative speeds of the multiplication unit and the addition unit can be more efficiently matched, thereby increasing the overall speed of the machine.

The chief disadvantage of the floating decimal point calculator lies in the fact that each addition, in general, is accompanied by shifting and extracting operations, in which digits are dropped to the right. If this loss of digits is ignored, the error thus arising may reach serious proportions when allowed to accumulate over a large number of operations. To compensate for this loss, it is necessary to apply, after each adding operation, a rounding correction which should be equal to the average value of the digits not retained.

Rounding corrections are usually applied by adding $5\times10^{-(n+1)}$ to a quantity which is to be rounded to the nth place of decimals. In this case the digit standing in the nth place will be increased by one, due to a 10's carry, whenever the digit in the $(n+1)$st place is 5 or greater. Unfortunately, due to 9's carry, the addition of the rounding correction may affect any or all of the digits in the quantity to be rounded. This suggests that two separate adding operations must be performed by a calculator with floating decimal point each time an addition of two quantities is called for. Further, if full advantage of the floating decimal point is to be taken in the design of multiplication units, a rounding correction must be applied after the accumulation of each partial product. Hence, the application of the rounding correction affects the speed not only of the addition unit, but of the multiplication unit as well.

In the present calculator, recall that the decimal digits are coded in the binary number system and note that the addition of unity to an even digit can be accomplished without the aid of any carrying operation. Then if it is permissible to double the rounding interval from $5\times10^{-(n+1)}$ to 1×10^{-n}, it becomes possible to apply a rounding correction without increasing the computing time. The method is extremely simple; whenever non-zero digits are dropped to the right and the lowest order digit is even, this digit is increased by one. On the other hand, when the lowest order digit retained is odd, no correction is made.

The round-off circuit for the addition unit is shown in Fig. 4.25. This circuit supplies an impulse to column 1-1 of the buss if the lowest order digit retained is odd, or if the sum is shifted one or two columns to the right, when read from sum register F to the buss, and at least one of the digits thus dropped is a non-zero digit.

The sum register in the multiplication unit has two round-off circuits. The first, shown in Fig. 5.24, is associated with transfer of the partial product accumulation from sum register F to add register D in preparation for the addition of the next multiple. During the transfer there is a static shift right of one column, resulting in the loss of the digit in column 1 of register F.

Since the accumulation may be in either the direct (positive) or complementary (negative) form, the rounding circuit must distinguish between the two cases. For positive accumulation in register F, an impulse will reach column 1-1 of the transfer buss through any of the energized relays of column 1 or through relay 2-1, if energized. If the accumulation is negative, the compensation required is the subtraction of a unit from odd complementary digits. This is accomplished by interrupting the read-out circuit from relay 2-1, register F, through a normally closed contact of the sign relay, unless a nine is being registered in column 1.

The second round-off circuit in the multiplication unit is located in the read-out to the buss from sum register F, as shown in Fig. 5.14. This circuit is effective to supply an impulse to column 1-1 of the buss if the lowest order digit retained is odd, or if there is a shift right of one column, resulting in the loss of the digit in column 1 of register F, and that digit is different from zero.

APPENDIX III

AUXILIARY TAPE PUNCHING EQUIPMENT

The following discussion contains a detailed description of the operation of the auxiliary tape punching equipment.

Unlike a printer, which operates or remains inoperative because of the presence or absence of a unidirectional current in the printer magnet, a tape punch is controlled by means of a bi-directional current through the punch magnet. The two conditions are called marking and spacing. When the magnet is continuously energized in the marking direction, the punch is at rest. When a marking pulse (rest pulse) is followed by a spacing pulse (start pulse), the punch will start operating, and the succeeding five or six marking or spacing pulses supplied by distributor segments 1 through 5 or 6 will cause holes to be punched or not punched in columns 1 through 5 or 6, respectively, of the tape (Figs. 1.3 and 1.4). Marking pulses are supplied if the punch operate relay is energized, and spacing pulses are supplied if it is de-energized.

The tape punches, instead of being solenoid-operated like those mounted on the calculator, are motor-driven as the tape used is a very heavy paper.

When the switches on the functional tape keyboard, Plate XVI, are turned on and the rotary switches are reset, the punch operate relay 1SRY is energized through the normally closed portion of the make-before-break contact K1-5 of the differential relay K1, Fig. A3.3. Current then flows through the punch magnet in the marking direction and the punch is at rest. The printer magnet is energized through the normally closed portion of the make-before-break contact G1-5 of the differential relay G1, Fig. A3.3, and the printer is inoperative.

The quantity to be punched into the tape is set up by means of the keys, Fig. A3.1, and depressing the motor button causes the printer and punch to start operating.

The operation of the punch will be discussed first. Relay 1RY, Fig. A3.1, is energized through a contact of the motor button and is held up through 1RY-1NO and N1-2NC. The outer rest segment R and the inner common of distributor 2DX, Fig. A3.2, now receive current through 1RY-2NO.

Distributor cycle 1.

Inner segment 1. Circuits are closed to both coils of differential relay K1, Fig. A3.2, one through L1-2NC, the other through K1-1NO. Hence the relay remains at rest.

Inner segment 4. The magnet of rotary switch 1M, Fig. A3.2, is energized, preparatory to stepping the switch to position 24.

Outer segments. During the first cycle the outer segments of the distributor have no effect because the normally open portion of the make-before-break contact K1-5 remains open. Current is supplied to the punch operate relay through the normally closed portion of K1-5.

Distributor cycles 2 and 3.

Cycles 2 and 3 are repetitions of cycle 1 except that the rotary switch is stepped to positions 25 and 1, respectively.

Distributor cycle 4.

Inner segment 1. Circuits are again closed to both coils of relay K1 and the relay remains at rest.

Inner segment 3. A circuit is established to the pick-up coil of relay L1 through a normally closed contact of the reset switch, position 1 level 6 of the rotary switch, and a second normally closed contact of the reset switch. The hold coil of L1 is energized through L1-1NO and remains energized until distributor cycle 17.

Inner segment 4. The rotary switch is again impulsed, stepping the switch to position 2.

Outer segments. As in the first three cycles, the outer segments have no effect.

Distributor cycle 5.

Inner segment 1. One coil of the differential relay K1 receives an impulse through K1-1NO. The other coil is not impulsed because contact L1-2 is now open; hence relay K1 is operated. It remains in the operate position because of the circuit from positive through the normally open portion of the make-before-break contact K1-1 to the first coil.

Inner segment 4. An impulse is supplied to the rotary switch magnet, stepping the switch to position 3.

Outer segments. Contact K1-5 is now in the operate position so that impulses are supplied to the punch operate relay only through the outer segments, thus initiating the punching of the first row of holes.

Outer segments 1, 2, 3, and 4. Since position 2 levels 1, 2, 3, and 4 are not wired, no impulse is supplied by these segments and no holes will be punched in columns 1, 2, 3, and 4 of the tape.

Outer segment 5. A circuit is closed from the positive side of the line through a normally closed contact of the blank feed button, Fig. A3.1, position 2 level 5 of the rotary switch (Fig. A3.2) contact L1-3NO, and outer segment 5 to the punch operate relay. Thus contact 1SRY-1 is closed on the marking side, conveying current through the punch coil in the marking direction and will cause a hole to be punched in column 5 of the tape (Fig. 1.3).

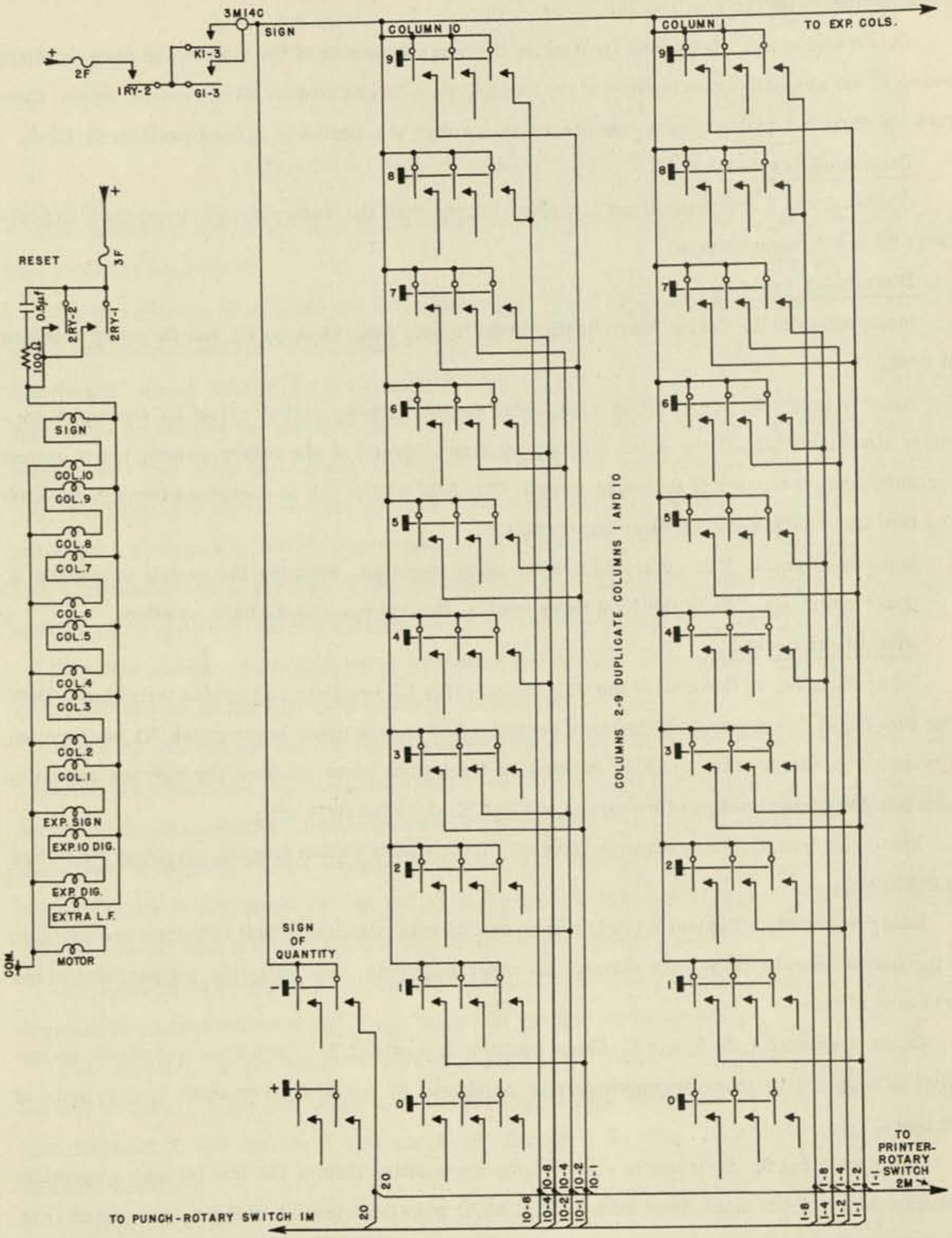

Fig. A3.1 - Functional Tape Keyboard Circuits.

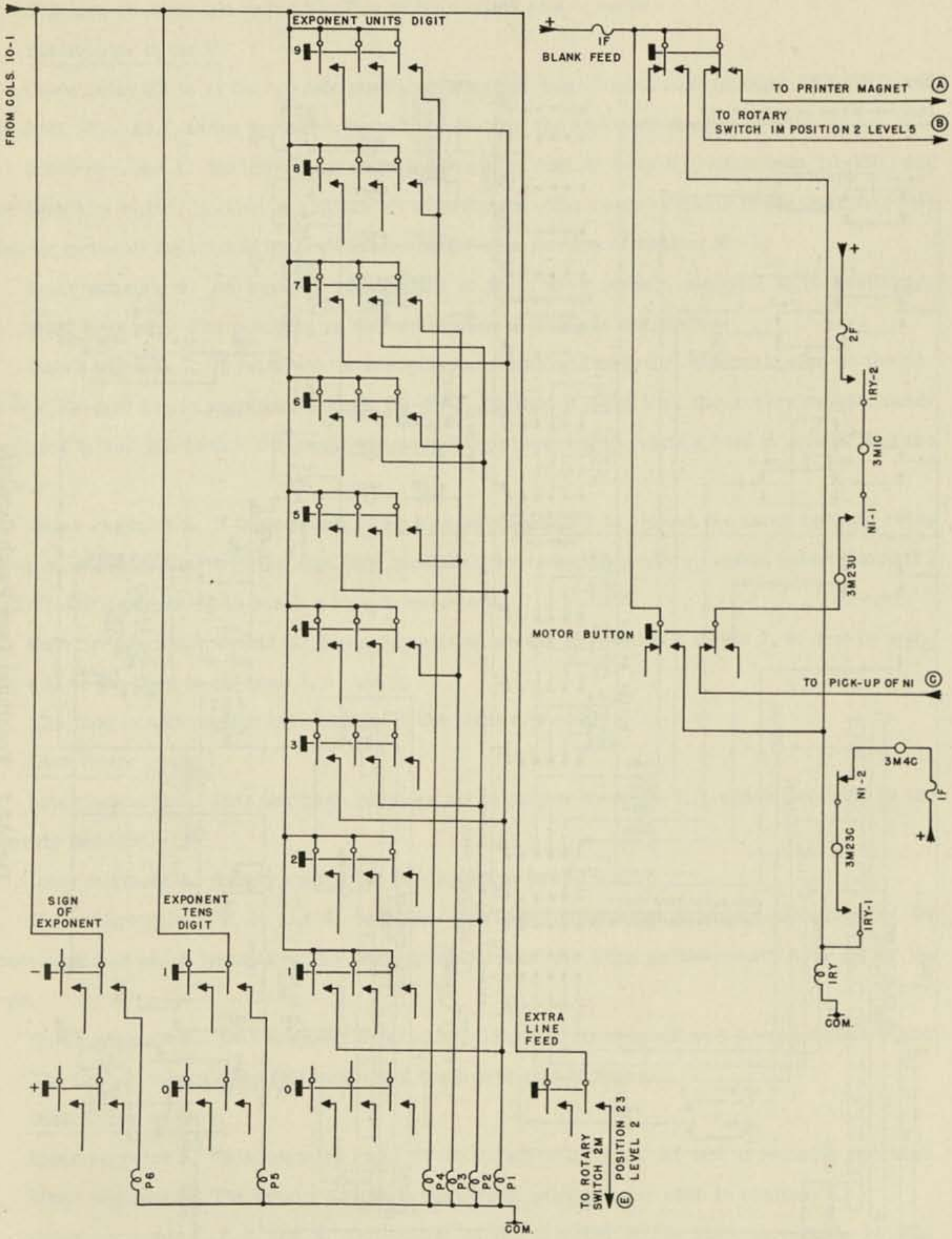

Fig. A3.1 continued - Functional Tape Keyboard Circuits.

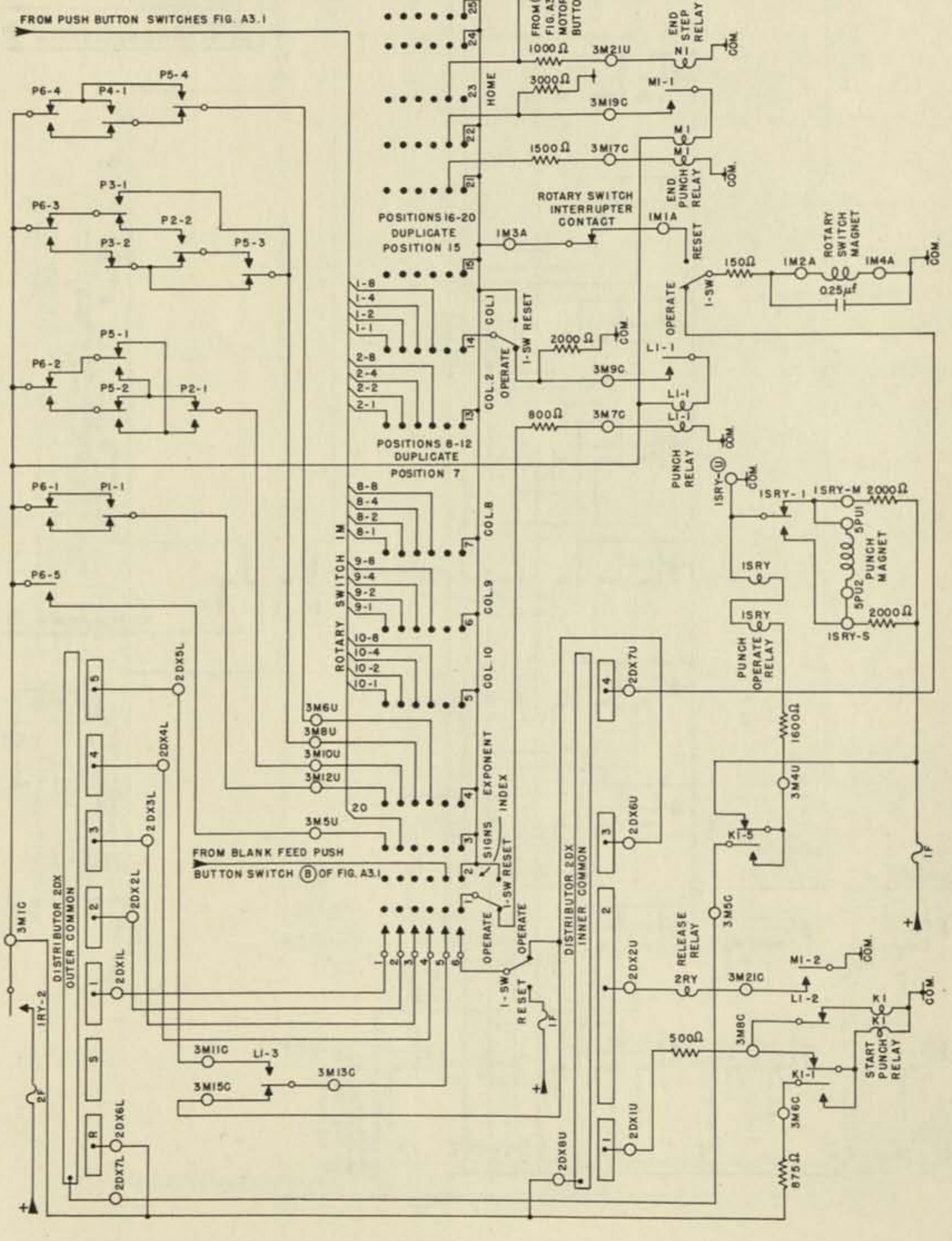

Fig. A3.2 - Functional Tape Punch Circuits.

The tape is advanced to the position of the second row of holes.

Distributor cycle 6.

Since relay K1 is in the operate position, a circuit has been closed through 1RY-2NO and K1-3NO, Fig. A3.1, to the key circuits and the coils of the exponent relays, P1-P6.

Inner segment 1. No impulse is supplied to either coil of relay K1, since both L1-2NC and the normally closed portion of contact K1-1 are open. The relay remains in the operate position by virtue of the circuit through the normally open portion of contact K1-1.

Inner segment 4. An impulse is supplied to the rotary switch, stepping it to position 4.

Start segment. The punching of the second row of holes is initiated.

Outer segment 1. If relay P6 is energized, indicating a negative algebraic sign on the exponent, an impulse is supplied through P6-5NO, position 3 level 1 of the rotary switch, outer segment 1, and K1-5NO to the punch operate relay preparing to punch a hole in column 1 of the tape.

Outer segment 2. If the key indicating a negative quantity is closed, the punch operate relay is again energized through the sign key, position 3 level 2 of the rotary switch, outer segment 2 and K1-5NO, preparing to punch a hole in column 2.

Outer segments 3, 4, and 5. Since there is no wiring to position 3 levels 3, 4, and 5, nothing will be punched in columns 3, 4, and 5.

The tape is advanced to the position of the third row of holes.

Distributor cycle 7.

Inner segment 1. This segment supplies no impulses to relay K1, which remains in the operate position.

Inner segment 4. Rotary switch 1M is stepped to position 5.

Outer segments 1, 2, 3, and 4. Impulses are supplied through contacts of relays P1-P6 from a circuit which translates the decimal notation of the keys to the binary notation of the tape.

Outer segment 5. This segment supplies no impulse since position 4 level 5 is not wired.

The tape is advanced to the position of the fourth row of holes.

Distributor cycle 8.

Inner segment 1. This segment supplies no impulses to relay K1 and it remains operated.

Inner segment 4. The rotary switch is energized, preparing to step to position 6.

Outer segments 1, 2, 3, and 4. Depending on the position of the keys in column 10, Fig. A3.1, impulses are supplied through 1RY-2NO, K1-3NO, the key contacts, position 5 levels 1, 2, 3, and 4 of the rotary switch, and the corresponding distributor segments to the punch operate relay, thus setting up combinations of holes to be punched in columns 1, 2, 3, and 4 of the tape.

Outer segment 5. As in cycle 7, this segment is not wired and supplies no impulse.

The tape is advanced to the position of the fifth row of holes.

Distributor cycles 9 through 16.

Cycle 8 is repeated, utilizing key columns 9 through 2 and positions 6 through 13 of the rotary switch. The tape is successively advanced from the position of the sixth to the position of the thirteenth row of holes.

Distributor cycle 17.

Inner segment 1. Again no impulse is supplied to relay K1 and it remains in the operate position.

Inner segment 3. A circuit is established from the positive side of the line through inner segment 3, a normally closed contact of the reset switch, position 14 level 6 of the rotary switch, a second normally closed contact of the reset switch, and contact L1-1NO to one end of the hold coil of relay L1. Since the other end of this coil is connected to the positive side of the line, through contact 1RY-2NO, all current flow in the coil ceases and the relay returns to its rest position.

Inner segment 4. The coil of the rotary switch receives an impulse, preparing the switch to step to position 15.

Outer segments. That portion of cycle 3 concerning the outer segments is repeated, substituting key column 1 and position 14 of the rotary switch.

The tape is advanced to the position of the index hole of the next quantity.

Distributor cycle 18.

Inner segment 1. Since contact L1-2NC is again closed, one coil of the differential relay K1 is impulsed. As the other coil is already energized, the relay returns to its rest position.

Inner segment 4. An impulse is supplied to the rotary switch preparatory to stepping to position 16.

Outer segments. Since the contact K1-5 is now in its rest position, the punch operate relay is connected to the positive side of the line through its normally closed portion, and the outer segments have no effect.

Distributor cycle 19 through 23.

Cycle 1 is repeated, the rotary switch receiving impulses to step to positions 17 through 21.

Distributor cycle 24.

Inner segment 1. Both coils of relay K1 are impulsed, and the relay remains at rest.

Inner segment 3. An impulse is supplied through contact L1-3NC and position 21 level 5 to the pick-up coil of relay M1. The hold coil of M1 is energized in the same manner as that of relay L1.

Inner segments 4. The rotary switch receives an impulse to step to position 22.

Outer segments. As in the preceding cycle, the outer segments have no effect.

Distributor cycle 25.

Inner segment 1. Again both coils of relay K1 are impulsed and the relay remains at rest.

Inner segment 2. Relay 2RY, Fig. A3.2, is impulsed through segment 2 and contact M1-2NO. The key reset magnets, Fig. A3.1, receive an impulse through contact 2RY-1NO in parallel with 2RY-2NO.

Inner segment 3. Relay M1 is de-energized in the same manner as relay L1 in cycle 17.

Inner segment 4. The rotary switch receives an impulse to step to its home position, 23.

Distributor cycle 26.

Inner segment 3. Relay N1 is energized through segment 3, contact L1-3NC and position 23 level 5 of the rotary switch. It remains energized through contacts 1RY-2NO, N1-1NO, and a normally closed contact of the motor button, Fig. A3.1. Contact N1-2NC interrupts the circuit to the coil of relay 1RY, Fig. A3.1. Contact 1RY-2NO then interrupts the circuit to the distributor and also to relay N1. Hence the unit returns to its initial inoperative condition and is ready to punch the next quantity.

Meanwhile, the printer has been recording the quantity which was set in the keys. Initially the printer magnet, Fig. A3.3, is continuously energized through the normally closed portion of the make-before-break contact G1-5 of the differential relay G1 and the printer is at rest. When contact 1RY-2NO closes, the printing operation is initiated since the inner common and the rest segment of distributor 1DX, Fig. A3.3, are both connected to the positive side of the line through this contact.

Distributor cycle 1.

Inner segment 1. One coil of the differential relay G1 is impulsed through the normally closed portion of the make-before-break contact G1-1. The other coil is not impulsed since contact H1-2NO is open, hence the relay is operated. The first coil remains energized through the normally open portion of contact G1-1 and the relay remains operated.

Inner segments 3 and 4. The magnet of rotary switch 2M, Fig. A3.3, is impulsed through contact G1-4NO, preparatory to stepping the rotary switch to position 2.

Since contact G1-5 is in the operate position, the outer segments now control the operation of the printer.

Outer start segment. Since no impulse is supplied to the printer magnet, the printing of the first character is initiated.

Outer segment 1. Contact G1-3NO, Fig. A3.1, has been closed, connecting the key circuits to positive. If the key indicating a negative quantity is closed, an impulse is supplied to the printer magnet through the key contact, position 1 level 1 of the rotary switch (Fig. A3.3), segment 1 and the normally open position of the make-before-break contact G1-5, positioning the first vane.

Outer segment 2. Since position 1 level 2 of the rotary switch is not wired, the printer magnet is not impulsed.

Outer segments 3, 4, and 5. The printer magnet is impulsed through 1RY-2NO, position 1 levels 3, 4, and 5 of the rotary switch, and segments 3, 4, and 5, positioning vanes 3, 4, and 5. By referring to Fig. 9.20, it will be seen that if the printer magnet is impulsed through segments 1, 3, 4, and 5, a negative sign will be recorded; if impulsed through 3, 4, and 5 only, the printer will space.

Distributor cycle 2.

Inner segment 1. Neither coil of relay G1 is impulsed since contact H1-2NO is open and the normally closed portion of contact G1-1 is open. The relay remains in the operate position by virtue of the circuit through the normally open portion of contact G1-1 to the positive side of the line.

Inner segments 3 and 4. The rotary switch magnet is impulsed through G1-4NO, preparing the switch to step to position 3.

Rest segment. The printer magnet is de-energized, initiating the printing of the second character.

Outer segments 1, 2, 3, and 4. The printer magnet may be impulsed through the keys in column 10, Fig. A3.1, position 2 levels 1, 2, 3, and 4 of the rotary switch and segments 1, 2, 3, and 4, positioning the vanes in a distribution corresponding to the key settings.

Outer segment 5. The printer magnet is impulsed through position 2 level 5, positioning vane 5.

The printer will now print the digit indicated by the position of the keys in column 10.

Distributor cycle 3.

Inner segment 1. Neither coil of relay G1 is impulsed and the relay remains operated.

Inner segments 3 and 4. An impulse is supplied to step the rotary switch to position 4.

Start segment. The printing of the third character is initiated.

Outer segments 1, 2, and 3. Impulses are supplied to the printer magnet positioning vanes 1, 2, and 3.

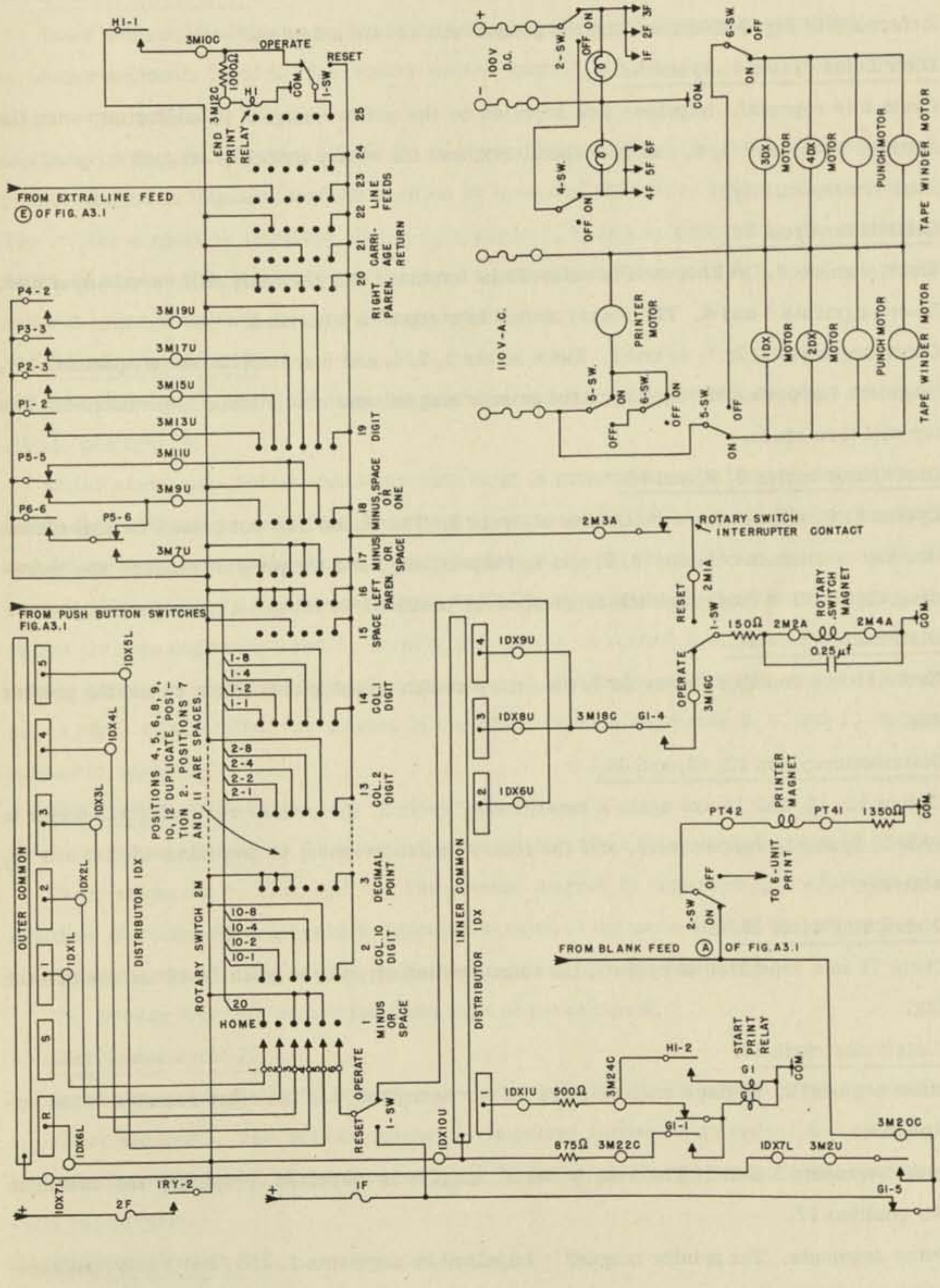

Fig. A3.3 - Functional Tape Print Circuits.

Outer segments 4 and 5. Since levels 4 and 5 are not wired, no impulses are supplied to the printer magnet, and vanes 4 and 5 are not positioned.

Reference to Fig. 9.20 shows that the printer will record a decimal point.

Distributor cycles 4, 5, and 6.

Cycle 2 is repeated. Impulses are supplied to the printer magnet in conformity with the key settings in columns 9, 8, and 7, respectively, and the rotary switch is stepped to positions 5, 6, and 7, respectively.

Distributor cycle 7.

Inner segment 1. Neither coil of relay G1 is impulsed and the relay will remain operated.

Inner segments 3 and 4. The rotary switch is stepped to position 8.

Outer segments 1, 2, 3, 4, and 5. Since levels 1, 2, 4, and 5 are not wired (cf. position 15), only segment 3 provides an impulse to the printer magnet, and vane 3 alone is positioned. The printer will then space.

Distributor cycles 8, 9, and 10.

Cycles 8, 9, and 10 are a repetition of cycle 2. The vanes are positioned in accordance with the key settings in columns 6, 5, and 4, respectively, and the printer records the corresponding digits. The rotary switch is stepped to positions 9, 10, and 11, respectively.

Distributor cycle 11.

Cycle 11 is a repetition of cycle 7, the rotary switch stepping to position 12 and the printer spacing.

Distributor cycles 12, 13, and 14.

Cycles 12, 13, and 14 are again a repetition of cycle 2, the printer recording the digits in columns 3, 2, and 1, respectively, and the rotary switch stepping to positions 13, 14, and 15, respectively.

Distributor cycle 15.

Cycle 15 is a repetition of cycle 7, the rotary switch stepping to position 16 and the printer spacing.

Distributor cycle 16.

Inner segment 1. Neither coil of relay G1 is energized, and the relay remains in the operate position.

Inner segments 3 and 4. The rotary switch magnet is impulsed, preparing the switch to step to position 17.

Outer segments. The printer magnet is impulsed by segments 1, 2, 3, and 4 only, positioning vanes 1, 2, 3, and 4. A reference to Fig. 9.20 will show that this will cause the printer to record a (, or left parenthesis.

Distributor cycle 17.

Inner segment 1. Neither coil of relay G1 is impulsed and it remains operated.

Inner segments 3 and 4. The rotary switch magnet is impulsed, preparing the switch to step to position 18.

Outer segments. If relays P5 and P6 are operated, indicating a negative exponent ≤ -10, the printer magnet is impulsed through position 17 level 1 of the rotary switch, positioning vane 1. The printer magnet is impulsed through segments 3, 4, and 5, positioning the corresponding vanes. As in cycle 1, the printer will record a minus sign if vanes 1, 3, 4, and 5 are positioned and will space if vanes 3, 4, and 5 only are positioned.

Distributor cycle 18.

Inner segments. Relay G1 remains operated and the rotary switch receives an impulse to step to position 19.

Outer segments. Three conditions may exist in connection with the printing of this character: first, P5 may be energized, indicating an exponent $j, |j| \geq 10$; second, P6 may be energized and P5 not energized, indicating a negative exponent > -10; third, P5 and P6 may both be deenergized, indicating a positive exponent $< +10$. In the first case, the printer magnet is impulsed through segments 1 and 5, causing the printer to record a 1. In the second case, the printer magnet is impulsed through segments 1, 3, 4, and 5, causing the printer to record a minus sign. In the third, the magnet is impulsed through segments 3, 4, and 5, causing the printer to space.

Distributor cycle 19.

Inner segments. Relay G1 remains operated and the rotary switch steps to position 20.

Outer segments 1, 2, 3, and 4. The printer magnet is impulsed in conformity with the positions of relays P1 to P4, which indicate the value of the units digit of the exponent.

Outer segment 5. The printer magnet is impulsed through segment 5.

The printer will then record the units digit of the exponent.

Distributor cycle 20.

Inner segments. Relay G1 remains operated and the rotary switch steps to position 21.

Outer segments. The printer magnet is impulsed through segments 1 and 4, positioning the corresponding vanes. Reference to Fig. 9.20 indicates that the printer will record a), or right parenthesis.

Distributor cycle 21.

Inner segments. Relay G1 remains operated and the rotary switch steps to position 22.

Outer segments. The printer magnet is impulsed through segment 4 only, causing a carriage return.

Distributor cycle 22.

Inner segments. The rotary switch steps to position 23, relay G1 remaining operated.

Outer segments. The printer magnet is impulsed through segment 2 only, causing. a line feed.

Distributor cycle 23.

Inner segments. The rotary switch steps to position 24.

Outer segments. If the extra line feed key, Fig. A3.1, is closed, a second line feed occurs.

Distributor cycle 24.

Inner segments. The rotary switch will be stepped to position 25.

Outer segments. Since position 24 of the rotary switch is not wired, the printer magnet is not impulsed, and the printer is not operated.

Distributor cycle 25.

Inner segment 1. Neither coil of relay G1 is impulsed and the relay remains operated.

Inner segment 2. Relay H1 is impulsed through segment 2, a normally closed contact of the reset switch, position 25 level 6 of the rotary switch, and a second normally closed contact of the reset switch. It remains in the operate position by virtue of the circuit through H1-1NO and 1RY-2NO to positive.

Inner segments 3 and 4. The rotary switch magnet receives an impulse to step the switch to position 1, its home position.

Outer segments. As in cycle 24, the outer segments supply only a rest impulse and the printer does not operate.

Distributor cycle 26.

Inner segment 1. Since contact H1-2NO is now closed, one coil of the differential relay G1 is impulsed. As the outer coil is already energized, the relay returns to its rest position.

Inner segments 3 and 4. Since contact G1-4NO is now open, the rotary switch magnet is not impulsed.

Outer segments. The normally closed portion of contact G1-5 is now closed and the outer segments have no effect. The printer is at rest.

Although distributor cycles 25 and 26 have terminated the printing operation, they do not complete the entire printing and punching operation. This is accomplished by circuits associated with the punch, which cause the keys to be reset and relay 1RY to be de-energized, which interrupts certain circuits from the positive side of the line. For these reasons the printer

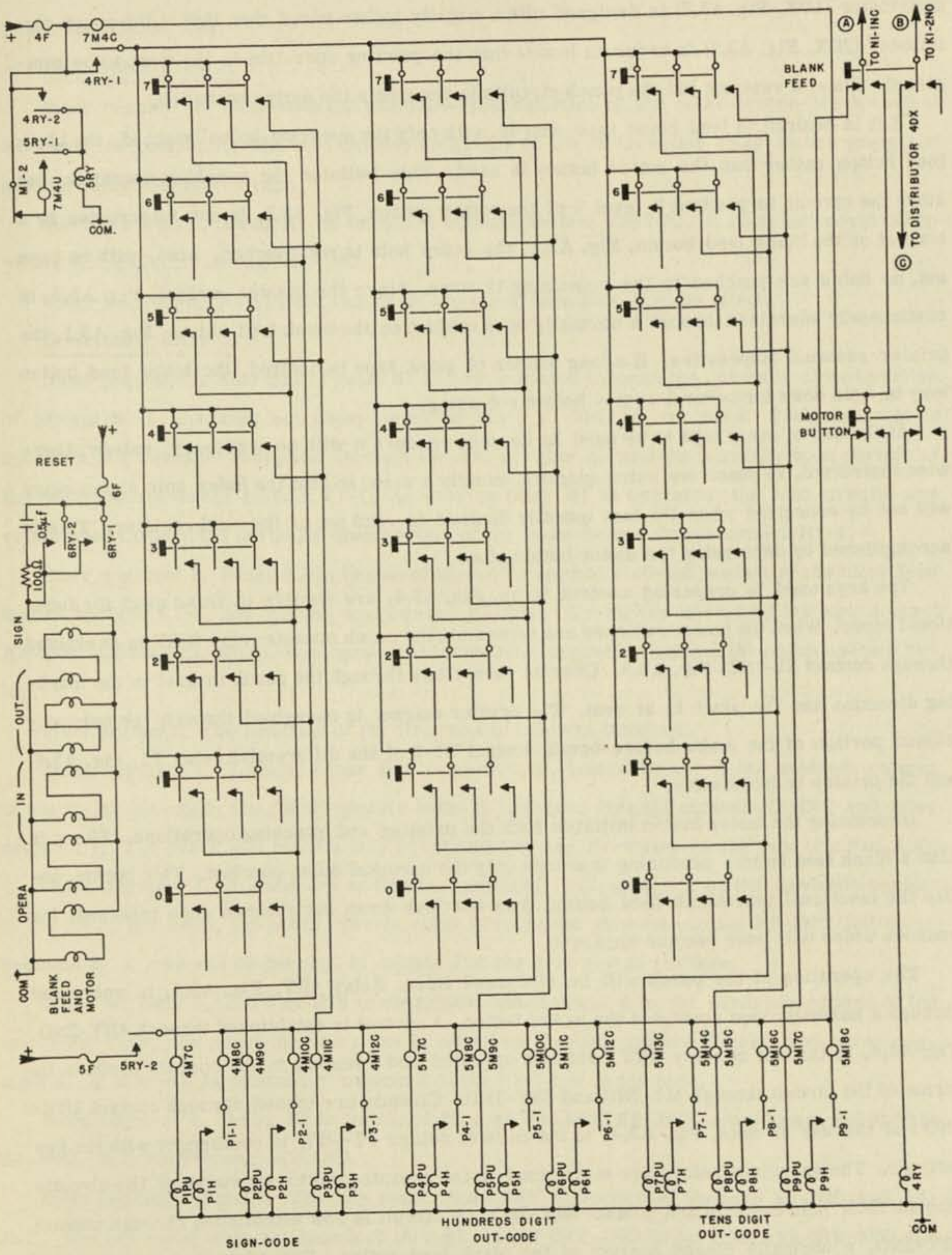

Fig. A3.4 - Control Tape Keyboard Circuits.

distributor (1DX, Fig. A3.3) is designed with a slightly higher speed than that of the punch distributor (2DX, Fig. A3.2) in order to insure that the printing operation is the first to be completed. Thus, it remains for the punch circuits to terminate the entire operation.

If it is desired to feed blank tape, that is, with only the sprocket holes punched, the blank feed button rather than the motor button is used. This initiates the punching operation; but since the circuit to position 2 level 5 of the rotary switch, Fig. A3.2, is now interrupted by a contact on the blank feed button, Fig. A3.1, the index hole is not punched. Also, with no keys set, no holes are punched in the remaining 12 rows. Since the printer magnet, Fig. A3.3, is continuously energized through a normally open contact on the blank feed button, Fig. A3.1, the printer remains inoperative. If a long section of blank tape is desired, the blank feed button may be held down for several cycles before releasing.

At the end of every tape to be used in the tape readers it will be necessary, unless otherwise instructed, to punch one extra quantity, usually a zero, so that the index hole alarm relay will not be energized when the last quantity desired is read out of the read register. This is accomplished by depressing the motor button alone.

The keys used in preparing control tapes, Fig. A3.4, are similar to those used for functional tapes. When the power switches are turned on, the punch operate relay 2SRY is energized through contact S1-3NC, Fig. A3.5. Current then flows through the punch magnet in the marking direction and the punch is at rest. The printer magnet is energized through the normally closed portion of the make-before-break contact T1-3 of the differential relay T1, Fig. A3.6, and the printer is inoperative.

Depressing the motor button initiates both the printing and punching operations. There is also a blank feed button, producing tape with only the sprocket holes punched. This button, unlike the functional tape blank feed button, does not lock down but returns when released, for reasons which will later become apparent.

The operation of the punch will be discussed first. Relay 4RY, Fig. A3.4, is energized through a normally open contact of the motor button. A circuit is established through 4RY-2NO, Fig. A3.4, to the coil of relay 5RY, which is operated and remains in the operate position by virtue of the circuit through M1-2NC and 5RY-1NO. Circuits are closed, through contact 4RY-1NO and the key circuits, Fig. A3.4, to the coils of relays P1-P27, in conformity with the key settings. The energized relays are maintained in the operate position by virtue of the circuits through their hold contacts and contact 5RY-2NO. A circuit is now established through contact 5RY-2NO, a normally closed contact of the blank feed button, Fig. A3.4, and the normally closed portion of the make-before-break contact N1-1, Fig. A3.5, to the inner common of the punch distributor 4DX.

Distributor cycle 1.

Inner segment 1. Since both the normally closed portion of the make-before-break contact S1-1 and the contact K1-3NC are closed, both coils of the differential relay S1 are energized and the relay remains at rest.

Inner segment 3. Relay K1 is impulsed through contact K2-2NC. It remains energized by virtue of the circuit through K1-1NO.

Outer segments. As S1-3NC is closed, the outer segments have no effect.

Distributor cycle 2.

Inner segment 1. One coil of relay S1 is now impulsed through the normally closed portion of contact S1-1, the other not being impulsed since K1-3NC is now open. Thus the relay is operated and remains energized through the coil of relay N1 and the normally open portion of the make-before-break contact S1-1. As soon as relay N1 is operated, the hold circuits are established through the normally open portion of the make-before-break contact N1-1.

Inner segment 2. Relay K2 is impulsed through a normally closed contact of the blank feed button, contact K1-2, now closed, and contact K3-2NC. It remains energized through contact K2-1NO. Contact S1-3NC is now open so that the outer segments control the punch operate relay.

Start segment. The punching of the first row of holes is initiated.

Outer segment 1. If relay P4 or P13 is energized, indicating a I in the hundreds column of the in- or out-code, the punch operate relay is impulsed through contact K3-4NC and outer segment 1. The punch will place a hole in column 1 of the first row in the tape (cf. Fig. 1.4).

Outer segment 2. If either P5 or P14 is energized, indicating a 2 in the hundreds column of the in- or out-code, the punch operate relay is impulsed through contact K3-5NC and outer segment 2. A hole will be punched in column 2 of the first row in the tape.

Outer segment 3. If P6 or P15 is energized, indicating a 4 in the hundreds column of the in- or out-code, the punch operate relay is impulsed through contact K3-6NC and outer segment 3. A hole will be punched in column 3 of the first row in the tape.

Inner segment 3. Relay K3 is impulsed through contacts K2-2NO, now closed, and contact K4-2NC. It is held through K3-1NO.

Inner segments 4 and 5. The key reset relay 6RY is energized through K3-3NO and K4-3NC. The key reset coils are impulsed through contact 6RY-1NO in parallel with 6RY-2NO and the keys are reset.

Outer segment 4. If P1 is energized, indicating a I in the sign-code, the punch operate re-

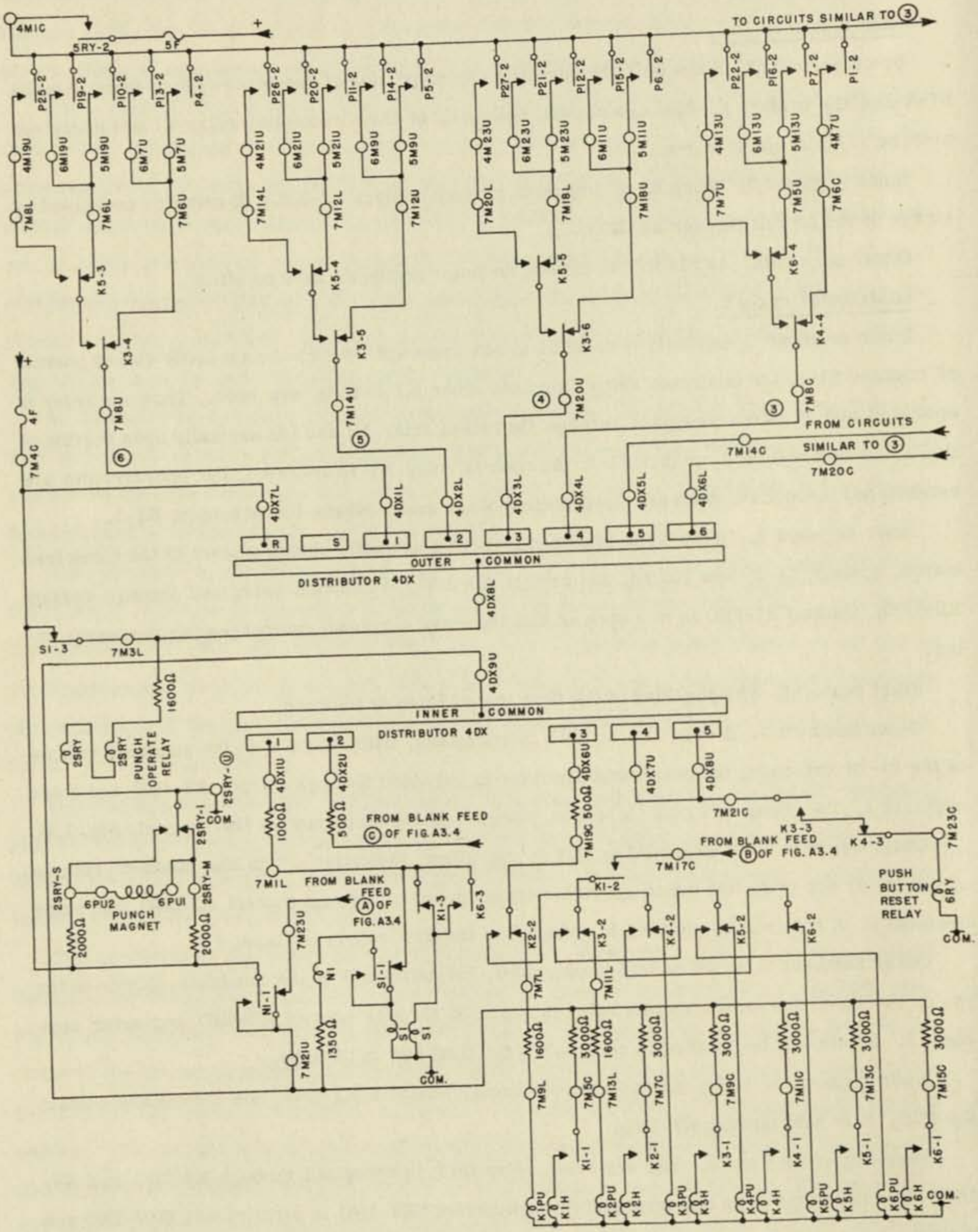

Fig. A3.5 - Control Tape Punch Circuits.

lay is impulsed through contact K4-4NC and outer segment 4. A hole will be punched in column 4 of the first row in the tape.

Outer segment 5. If P2 is energized, indicating a 2 in the sign-code, the punch operate relay is energized through K4-5NC and outer segment 5. A hole will be punched in column 5 of the first row in the tape.

Outer segment 6. If P3 is energized, indicating a 4 in the sign-code, the punch operate relay is energized through K4-6NC and outer segment 6. A hole will be punched in column 6 of the first row of the tape.

The holes are now punched and the tape is advanced into position for punching the second row of holes.

Distributor cycle 3.

Inner segment 1. Since both S1-1NC and K1-3NC are now open, neither coil of relay S1 receives an impulse and it remains operated.

Inner segment 2. Relay K4 is now impulsed through the blank feed button, contacts K1-2NO, K3-2NO, and K5-2NC. It is held through contact K4-1NO.

Outer segment 1. If P10 or P19 is energized, indicating a 1 in the units column of the in- or out-code, the punch operate relay is impulsed through contacts K5-3NC and K3-4NO, and outer segment 1. A hole will be punched in column 1 of the second row in the tape.

Outer segment 2. If P11 or P20 is energized, indicating a 2 in the units column of the in- or out-code, the punch operate relay is impulsed through contacts K5-4NC and K3-5NO, and outer segment 2. A hole will be punched in column 2 of the second row in the tape.

Outer segment 3. If P12 or P21 is energized, indicating a 4 in the units column of the in- or out-code, the punch operate relay is impulsed through contacts K5-5NC and K3-6NO, and outer segment 3. A hole will be punched in column 3 of the second row in the tape.

Inner segment 3. Relay K5 is now impulsed through contacts K2-2NO, K4-2NO, and K6-2NC. It is held through K5-1NO.

Outer segment 4. If P7 or P16 is energized, indicating a 1 in the tens column of the in- or out-code, the punch operate relay is impulsed through contacts K6-4NC and K4-4NO. A hole will be punched in column 4 of the second row in the tape.

Outer segment 5. If P8 or P17 is energized, indicating a 2 in the tens column of the in- or out-code, the punch operate relay is energized through K6-5NC and K4-5NO. A hole will be punched in column 5 of the second row in the tape.

Outer segment 6. If P9 or P18 is energized, indicating a 4 in the tens column of the in- or out-code, the punch operate relay is impulsed through K6-6NC and K4-6NO. A hole will be punched in column 6 of the second row of the tape.

The holes are now punched and the tape is advanced into position for punching the third row of holes.

Distributor cycle 4.

Inner segment 1. Neither coil of relay S1 receives an impulse and it remains operated.

Inner segment 2. Relay K6 is impulsed through the blank feed button and contacts K1-2NO, K3-2NO, and K5-2NO. It remains energized through K6-1NO.

Outer segment 1. If P25 is energized, indicating a I in the units column of the operation-code, the punch operate relay is impulsed through K5-3NO, K3-4NO, and outer segment 1. A hole will be punched in column 1 of the third row.

Outer segment 2. If P26 is energized, indicating a 2 in the units column of the operation-code, the punch operate relay is impulsed through K5-4NO and K3-5NO. A hole will be punched in column 2 row 3.

Outer segment 3. If P27 is energized, indicating a 4 in the units column of the operation-code, the punch operate relay is impulsed through K5-5NO and K3-6NO. A hole will be punched in column 3 row 3.

Outer segment 4. If P22 is energized, indicating a I in the tens column of the operation-code, the punch operate relay is impulsed through K6-4NO and K4-4NO. A hole will be punched in column 4 row 3.

Outer segment 5. If P23 is energized, indicating a 2 in the tens column of the operation-code, the punch operate relay is impulsed through K6-5NO and K4-5NO. A hole will be punched in column 5 row 3.

Outer segment 6. If P24 is energized, indicating a 4 in the tens column of the operation-code, the punch operate relay is impulsed through K6-6NO and K4-6NO. A hole will be punched in column 6 row 3.

The third row of holes, completing one line of coding, are now punched, and the tape is advanced into position for punching the first row of the next line of coding.

Distributor cycle 5.

Inner segment 1. Contact K6-3NO is now closed and one coil of differential relay S1 is impulsed. Since the other coil is already energized, the relay returns to the rest position.

Outer segments. Since S1-3NC is again closed, the outer segments have no effect and the punch is at rest.

When contact 5RY-2NO closes, the printing operation is initiated, since this contact connects the inner common of distributor 3DX, Fig. A3.6, to the positive side of the line.

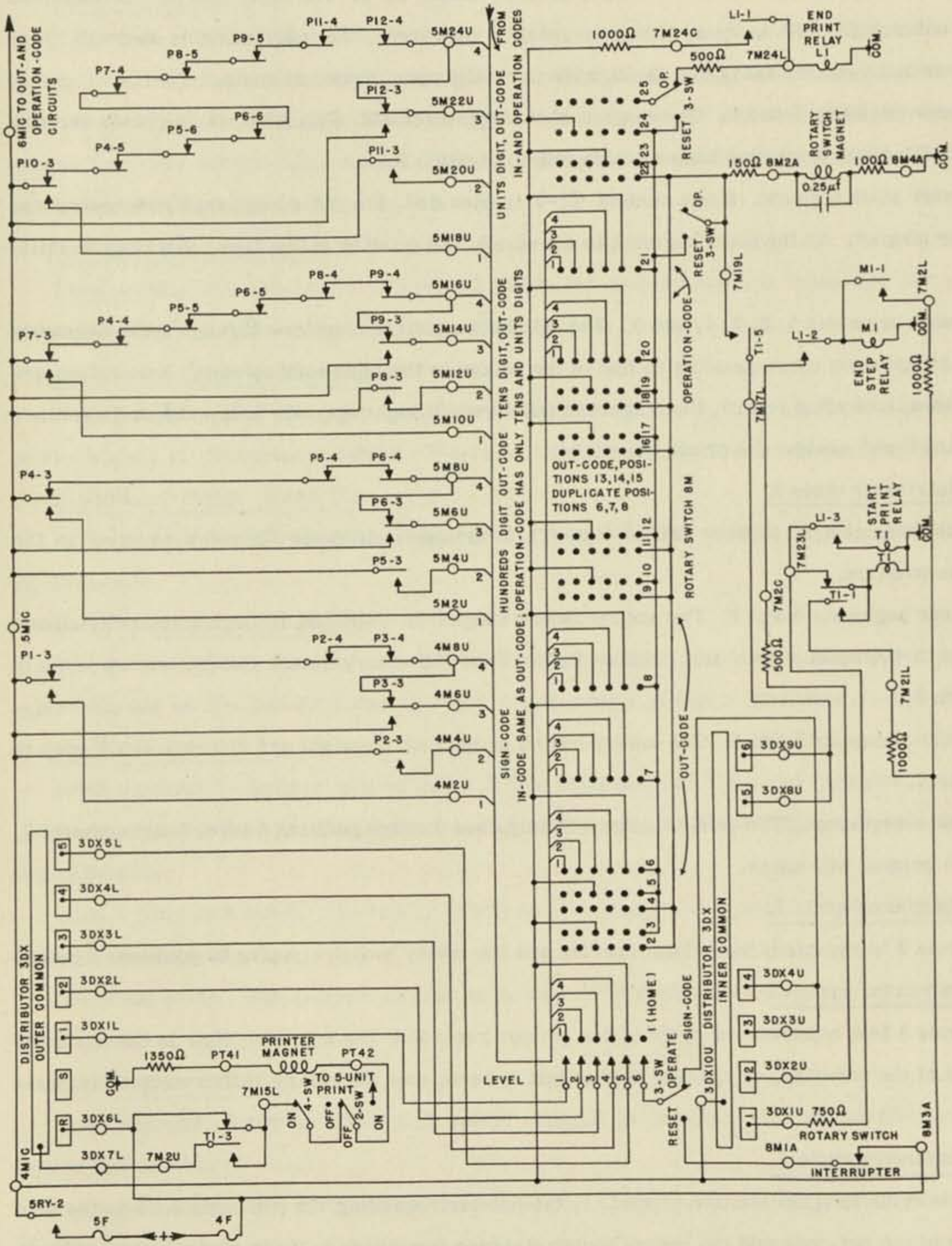

Fig. A3.6 - Control Tape Print Circuits.

Distributor cycle 1.

Inner segment 1. One coil of differential relay T1, Fig. A3.6, is impulsed through the normally closed portion of the make-before-break contact T1-1. The other coil is not impulsed since contact L1-3NO is open, hence the relay is operated. The relay remains operated since the first coil remains energized through the normally open portion of contact T1-1.

Inner segments 5 and 6. The magnet of rotary switch 8M, Fig. A3.6, is impulsed through contact T1-5NO, preparing the switch to step to position 2.

Outer start segment. Since contact T1-3 is operated, the outer segments now control the printer magnet. As the start segment is not wired, the printing of the first character is initiated.

Outer segments 1, 2, 3, 4, and 5. The printer magnet is impulsed through these segments in a configuration corresponding to that of the relays in the sign-code column. If no relays are energized, indicating a zero, the magnet is impulsed through segments 3, 4, and 5, setting vanes 3, 4, and 5 and causing the printer to space.

Distributor cycle 2.

Inner segment 1. Neither coil of relay T1-1 is impulsed; hence the relay remains in the operate position.

Inner segments 3 and 4. The rotary switch magnet is impulsed through a normally closed contact of the reset switch and position 2 level 6 of the rotary switch and the switch steps to position 3.

Inner segments 5 and 6. The rotary switch magnet is impulsed and the switch will step to position 4.

Outer segments. The printer magnet is impulsed through position 4 level 3 and segment 3, and the printer will space.

Distributor cycle 3.

Cycle 2 is repeated, the printer spacing and the rotary switch stepping to positions 5 and 6.

Distributor cycle 4.

Cycle 4 is a repetition of cycle 1, the printer recording the non-zero digit in the hundreds column of the out-code, or spacing if the digit is zero, and the rotary switch stepping to position 7.

Distributor cycle 5.

This cycle is again similar to cycle 1, the printer recording the non-zero digit in the tens column of the out-code and the rotary switch stepping to position 8. If the digits in the hundreds column and the tens column are both zero, the printer will again space. If either P4-4NC, P5-5NC, or P6-5NC are open, indicating a non-zero digit in the hundreds column, then the printer will print a zero if none of the tens column relays are energized.

Distributor cycle 6.

This cycle is also similar to cycle 1, the printer recording the non-zero digit in the units column of the out-code. If the digits in all three columns are zero, indicating the absence of an out-code, the printer will again space. If, however, there is a non-zero digit in either the tens or hundreds column and a zero in the units column, the printer will record a zero. The rotary switch will step to position 9.

Distributor cycles 7 and 8.

These cycles are repetitions of cycles 2 and 3, the printer spacing twice and the rotary switch stepping to positions 10, 11, 12, and 13.

Distributor cycles 9, 10, and 11.

During these cycles the printer is controlled as in cycles 4, 5, and 6, using the in-code relays instead of the out-code relays. The rotary switch will step to positions 14, 15, and 16.

Distributor cycles 12 and 13.

As in cycles 2 and 3, the printer spaces twice and the rotary switch steps to positions 17, 18, 19, and 20.

Distributor cycles 14 and 15.

During these cycles the printer is controlled as in cycles 4 and 5, using the operation-code relays instead of the out-code relays. The rotary switch steps to positions 21 and 22.

Distributor cycle 16.

Inner segment 1. Neither coil of relay T1 is impulsed and the relay remains operated.

Inner segments 3 and 4. The magnet of the rotary switch is impulsed, the switch stepping to position 23.

Inner segments 5 and 6. The rotary switch magnet is again impulsed, the switch preparing to step to position 24.

Outer segments. The printer magnet is impulsed through segment 4, causing a carriage return.

Distributor cycle 17.

Inner segments 5 and 6. The rotary switch magnet is impulsed, the switch preparing to step to position 25.

Outer segments. The printer magnet is impulsed through segment 2, causing a line feed.

Distributor cycle 18.

Inner segments 3 and 4. Relay L1 is impulsed through position 25 level 6 of the rotary switch. It remains energized through L1-1NO.

Inner segments 5 and 6. The rotary switch magnet is impulsed and the switch will step to position 1, its home position.

Outer segments. Position 25 levels 1, 2, 3, 4, and 5 are not wired and the printer will not operate.

Distributor cycle 19.

Inner segment 1. As contact L1-3NO is now closed, one coil of differential relay T1 is impulsed. Since the other coil is already energized, the relay returns to its rest position. When contact T1-3 returns to its rest position, the printer magnet is again continuously energized and the printer becomes inoperative.

Inner segment 2. Relay M1 is impulsed through contact L1-2NO, now closed. M1 is held up through M1-1NO. Contact M1-2NC now opens, de-energizing relay 5RY, thus ending the complete operation.

It will be noted that the printer circuits control the termination of the entire operation since printing takes nineteen cycles while punching takes but five.

If it is desired to feed blank tape, the blank feed button is used. Since neither relay 4RY nor, consequently, 5RY is energized, the inner common of the printer distributor (3DX, Fig. A3.6) is not connected to the positive side of the line, and the printer will remain inoperative. The inner common of the punch distributor (4DX, Fig. A3.5) is connected to the positive side of the line through a normally open contact of the blank feed button and the punching operation is initiated. Since relays 4RY and 5RY are not energized, none of the relays P1-P27 are energized and no holes will be punched except the sprocket holes. Relay K1 is energized as in the usual punching routine (cf. punch distributor cycle 1) but relay K2 is not energized until the blank feed key is released. Punching continues, however. When the blank feed button is released, the sequencing relays K2-K6 are energized as in the normal routine. The operation is terminated during the cycle following the impulsing of K6, relays S1 and N1 being returned to their rest positions and the distributor circuit being returned to its normally inoperative condition. It should now be clear why the blank feed button is non-locking, since the operation cannot be terminated until the button is released, allowing the sequence relays K2-K6 to be operated. Because the amount of blank tape fed by this method cannot be precisely controlled, the motor button must be used when one or more blank lines of coding are to be inserted in the tape.

The tape reproducing equipment is used to duplicate both control and functional tapes automatically and at relatively high speeds.

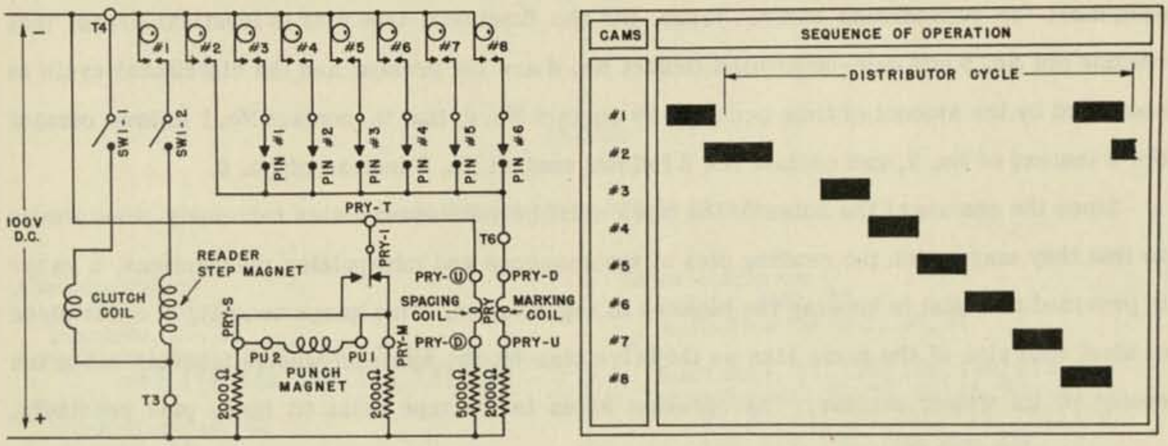

Fig. A3.7 - Tape reproducer circuits and timing.

The tape punches employed in the tape reproducer tables are identical with those on the tape preparation table. The tape readers consist of a motor-driven cam shaft, linked to the motor drive by a single revolution clutch and a reader such as those used in the tape-reading units. The contacts of the punch operate relays, like those in the tape preparation table, have two stable positions, marking and spacing. Unlike the tape preparation relays, the reproducer relays have two coils, a marking coil and a spacing coil. When the spacing coil is energized, the contact is closed on the spacing side and when the marking coil is energized, the contact is closed on the marking side.

With the power turned on and the control switch open, the clutch is disengaged and the cam shaft is stopped with cam-controlled contact No. 2 closed. The spacing coil of the punch operate relay (PRY, Fig. A3.7) is energized through a 5000 ohm resistor. Since cam contact No. 2 is closed, the marking coil is energized through a 2000 ohm resistor. The current flow is then greater in the marking coil, hence contact PRY-1 is closed on the marking side and the punch is at rest. When switch 1 is closed, the clutch is energized and the cams start rotating. When cam-controlled contact No. 2 is opened, the marking coil of the punch operate relay is de-energized and contact PRY-1 moves to the spacing side. Thus the punching of the first row of holes is initiated. Cam-controlled contacts No. 3 through No. 8, in conjunction with tape reading pins No. 1 through No. 6 in the reader, have the same effect on the operation of the punch as distributor segments 1 through 6 in the control tape preparation table (cf. page 352). At the end of the cycle the reader step magnet is impulsed and the tape is moved when the magnet is de-energized. The control handle may be raised, opening switch 1 (Fig. A3.7), during any cycle. The unit will then complete that cycle and stop. The foregoing description pertains to the equipment for reproducing control tapes, but the functional tape unit is identical except that reading pin No. 6 and cam-controlled contact No. 8 are not present and the distributor cycle is shortened by the amount of time occupied by contact No. 8; that is, contact No. 1 follows contact No. 4 instead of No. 5, and contact No. 2 follows contact No. 7 instead of No. 8.

Since the spacing of the holes in the tapes must be maintained within extremely close limits so that they may match the reading pins of the sequence and interpolator mechanisms, a gauge is provided to assist in keeping the punches in registration. This gauge consists of a flat piece of steel with pins of the same size as the drive pins on the sprocket wheels inserted along the center of its widest surface. The sprocket holes in the tape must fit these pins precisely.

INDEX

(All references are to pages)

- Absolute values
  - positive, 10, 25
  - negative, 10, 25
- Addend register, 15, 21, 26, 67, 72, 76, 78, 140, 176, 180, 182, 186, 187
- Addition
  - block diagram, 68
  - circuits, 45, 48
  - example of, 69
  - initiation of, 67, 69
  - method of, 44, 48, 67
  - timing of, 74
  - unit, 15, 21, 25, 29, 36, 39, 69, 84, 87, 139, 159, 172, 174, 177, 185, 189, 263
- "Add one" circuit, 77, 79, 82
- Alarm
  - addition, 69
  - automatic, 271
  - bell circuits, 144
  - circuits, 2, 66, 79, 81, 88
  - lights, 152 224, 257, 258, 260
  - main, 145, 171, 183, 185, 187, 204, 212, 216, 224, 229, 234, 242
  - multiplication, 88, 116
  - pick-up relays, 160, 169, 175
  - printer, 237
  - relays, 127, 140, 144, 159, 167
- Algebraic sign, 10
- Alternate impulse relays, 134, 136
- Alternating current control circuit, 256, 257
- Arctangent, 15, 29, 153
  - computation of, 187-190
  - timing, 190
- Argument
  - printing of, 236, 238, 248
  - transformed, for interpolation, 196
  - register, 30, 195
- Augend register, 21, 25, 67, 72, 76, 77, 78, 171, 176, 180, 186, 187
  - in-relays, 69
- Automatic Sequence Controlled Calculator, 22, 39, 262, 272, 275
- Auxiliary in-relays
  - function unit, 175, 176, 190
  - read register, 224, 226
- Auxiliary pin selector relays, 132
- Auxiliary punch relay, 228
- Auxiliary register relays
  - function unit, 163, 180, 193
  - interpolator unit, 204
- Auxiliary shift relay, 239

- Base load problems, 270
- Bell Telephone Laboratories' Relay Computer, 7
- Binary number system, 7
- Block diagrams
  - addition unit, 68
  - multiplication unit, 90, 91
- Buss
  - functional, 33, 195, 198, 199, 212, 217
  - transfer, 10, 25, 29, 33, 37, 51, 53, 72, 81, 82, 83, 100, 116, 117, 162, 178, 186, 187, 190, 192, 234, 237
- Buss-tie relays, 10, 25, 38, 130, 139, 145
  - lights for, 258, 261

- Cam-controlled contacts, 69, 76, 89, 140, 146
  - addition unit, 73
  - interpolation unit, 199, 210
  - multiplication unit, 98, 99
  - tape punch, 227
  - tape reader, 224, 226
- Cams, 7
  - pin box, 123
- Cam unit, 1, 7, 21, 38, 118, 120, 123
  - interpolator, 199, 210
  - motor, 256, 257, 261
  - oil pump for, 256, 257
- Carry
  - end around, 47
  - example of, 47
  - in addition unit, 67, 78, 81
  - in multiplication unit, 103, 107, 113, 115
  - 9's and 10's, 45
  - sum-with, 47
  - sum-without, 46, 77, 97
- Cascade circuit, 41
- Check
  - mathematical, 39, 61, 263, 265, 267, 268
  - print, 232
  - register, 15, 38, 39, 58, 61, 140, 143, 269 274, 286
  - tolerance for, 39, 266, 268, 272, 273, 274 285, 293
  - visual, 84, 263
- Circuits
  - addition, 44-48
  - add-one, 77, 79, 82
  - alarm, 2, 66, 81, 88, 116, 166, 181, 185, 207, 234
  - basic (see Chapter II)
  - binary addition, 50
  - carry, 47, 48, 78, 103
  - exponent difference, 72
  - in-shift, 68, 70, 78
  - invert, 43, 76, 83, 85, 103, 106, 107, 113, 114, 115
  - multiple selector, 103, 106, 109, 111, 114
  - out-shift, addition unit, 77, 79, 83, 87
  - out-shift, multiplication unit, 116

- Circuits (continued)
  - sequence mechanism phasing, 120
  - sensing
    - addition unit, 79
    - functional unit, 29, 30, 161, 166, 169, 172, 175, 182, 183, 185, 187, 189, 190, 192
  - shift, 43, 44, 63, 239
  - start, 61, 129
  - stop, 143
  - sum invert, 83
  - summation, 67
  - sum-with-carry, 48, 50, 77
  - sum-without-carry, 46, 48, 50
    - addition unit, 67, 77, 80
    - multiplication unit, 97, 104-107, 110, 115
- "Coded decimal," 7
- Codes, 21, 37, 51
  - (see Appendix I for List of Codes)
  - conditional and unconditional, 38
  - functional, 193
  - in-, 37, 39, 51, 56, 57, 58, 66, 135, 139, 145, 193
  - left and right, 51, 323
  - operation-, 21, 34, 37, 54, 62, 142, 143, 145, 159, 193, 231, 232
  - out-, 37, 51, 54, 56, 57, 58, 66, 88, 135, 139, 145
  - sign-, 25, 37, 54, 67, 83, 88
  - start and stop, 129
- Coding
  - examples of, 16, 154-158, 168, 173, 179, 184, 188, 280-283, 293-301, 313-321
  - form, 16, 21, 51, 52, 67, 88, 198, 223, 227, 237, 268, 275
- Code-interchange register, 15, 34, 38, 39, 58, 130, 135, 187, 189, 286, 290, 292, 302
- Complements on nine, 26, 29, 43, 67, 78, 83
- Constant register, 51, 54, 55, 153, 162, 178, 183, 189
- Control of calculator, 1
  - (see Chapters VI and X)
- Control quantities, 270, 271, 275
- Control tapes, 15, 34, 40, 54, 254, 271-275, 286
- Cosine, 15, 29, 153
  - computation of, 183-185
  - timing, 185
- Cross register, 10, 26, 51, 57, 58, 263
- Cross start, 129
- Cut-off switch, 237, 260
- Cycle
  - machine, 7, 21, 22

- Delay timer, 201, 216, 228
- Detent
  - sequence mechanism, 122
  - interpolator mechanism, 210
- Differential relay, 244
  - (see Appendix III)
- Direct current control circuit, 255, 256
- Distributor, 244, 246, 250, 252, 254
- Division, 153

- Elementary functions, 15, 29, 153
  - computation of, see Chapter VII
- Emergency stop button, 152, 256, 260
- End around carry, 38, 78
- End-of-problem stop, 278
- End print relay, 244
- Exponent difference register, 72, 74, 76
- Exponents, 7
- Exponential function, 15, 29, 153
  - computation of, 178-180
  - timing, 180
- External storage, 34, 219

- "Fast" tape, 270
- Functional buss, 33, 195, 198, 199, 212, 217
- Functional registers, 15, 29, 51, 62, 153
- Functional tapes, 30, 33, 195, 198, 207, 254
  - preparation of, 195, 254 (see also Appendix III)
- Functional units, 15, 29, 54, 153, 193
- Functional printing, 234, 236

- Generator, 118, 255, 256
- Ground lights, 257, 258, 261

- Impulses
  - electrical, 1, 41
  - pick-up, 2
  - read-through, 42, 54
  - reset, 2
  - timing of, 7
  - types of, 52
- In-codes, 37, 39, 51, 56-58, 66, 135, 139, 145, 193
  - (see Appendix I for List of Codes)
- Index check, 217, 224, 261
- Indicator lights, 2, 256
- Input mechanism, 34
- Input register, 2, 10, 25, 51, 53, 56, 145, 219, 260, 261, 265, 286
- Input tapes, 270
- In-pyramid, 79, 116, 135, 136, 160, 201, 227, 237
- In-relays, 25, 26, 39, 51, 56-58, 61, 62, 69, 97, 139, 140, 198
  - multiplier, 100
  - transfer, 141
- In-shift relays, 74, 77
- Integral part of argument, 186, 198
- Interpolation
  - storage register, 195, 196, 198
  - timing, 201, 205, 213
- Interpolator mechanism, 2, 15, 30, 33, 34, 195, 198, 199, 201, 207, 210, 212, 259
  - drive for, 30, 199
  - placing tapes on, 259
  - starting of, 198, 199
- Interpolator unit, 195, 196
  - argument register for, 195
  - functional tape for, 195
- Invert circuits, 43
  - addition unit, 76, 83, 85
  - multiplication unit, 103, 106, 114

K-relays, 160, 161, 163, 172, 174, 193

Larger exponent register, 77
Lights
  indicator, 2, 256
  read-out, 1, 10, 26, 59, 263, 290
  synchronizing, 120
Logarithm, 15, 29, 153
  computation of, 172-174
  timing, 174

Machine cycle, 7, 21, 22
Magnetic clutch, 209
Main control board, 1, 2, 118
Main control panel, 10, 26, 69, 79, 88, 116, 131, 139, 232, 234, 260
Main machine alarm, 212, 216, 224, 229, 234, 242
  relay, 145
Main operating panel, 126, 145, 152, 255
Manual operation of calculator, 145, 146
Manual release handle, 123, 257
Manual starting procedure, 126
Mathematical check, 263, 265, 267
  differencing, 268
  duplicate computation, 268
  identities, 268
Multiples, 26, 88, 97, 100, 106, 107, 111, 112, 114
  register, 62
Multiplicand register, 89, 103
Multiplication
  alarms, 88, 116
  cam-controlled contacts for, 98, 99
  example of, 88
  initiation of, 88, 141
  timing, 95
Multiplication unit, 15, 21, 25, 26, 29, 88, 95, 139, 159, 174, 185, 189, 263
  subtraction in, 43
Multiplier register, 26, 111, 114

Normalization, 7

Off-machine relays (see Stop-read-out relays)
Oil pump (cam unit), 256, 257
One-or-two interpolation switch, 33, 195, 198, 199
One-or-two problem switch, 26, 33, 57, 58, 127, 129, 130, 137, 139, 142, 198, 199
One-second stop relay, 142
Operating instructions, 264, 265, 271-273, 275-277, 288, 289
Operating panel, 126, 145, 152, 255
Operation-codes, 21, 34, 37, 54, 62, 142, 143, 145, 159, 193, 231, 232
  (see Appendix I for List of Codes)
Operation-pyramid, 62, 136, 160, 162, 163, 169, 170, 180, 187, 190, 192, 199, 223, 228, 238
Operator's table, 1, 126, 152, 219, 227, 237, 244, 260
Order or command, 15, 21
Out-codes, 37, 51, 54, 56-58, 66, 88, 135, 139, 145
  (see Appendix I for List of Codes)
Output mechanism, 34
Out-pyramid, 52, 69, 72, 89, 97, 135, 136, 139, 163, 171, 172, 175, 176, 182, 186, 187, 192, 223
Out-relay, 25, 39, 51, 52, 55, 56, 63, 103, 116, 140, 186, 198
  addition unit, 83
  multiplication unit, 115
  read register, 223
  storage register, 89, 97
  transfer register, 141, 161
Out-shift circuit
  addition unit, 77, 79, 83, 87
  multiplication unit, 116

Paper tapes, 30, 195
Phasing circuit, 120
Pin box
  cam, 123, 126
  sequence mechanism, 123
  interpolator mechanism, 207
Pin relays, 118, 131, 132, 134, 135, 137
Pin selector relays, 132
Print codes, 234
Printer, 1, 5, 15, 31, 34, 219, 231, 234, 236, 244, 249, 250, 254, 259, 268
Printer alarm circuit, 237
Printer control switches, 231
Printing
  styles of, 34, 231
  check, 232
  initiation of, 234
  timing of, 235
Print-input register, 34, 231, 232, 234, 237, 239, 242, 260, 262, 274, 286
Print register, 232, 234, 239, 241, 242, 248, 249, 262
  check relay, 243
Problem preparation, 264
  (see Chapter XI)
Product out-relay, 140
Product register, 29, 103, 107, 110, 111, 113, 115
  (see Sum register, multiplication unit)
Punches (see Tape punches)
Punch register, 221, 226, 228, 229, 260
Pyramids
  in-, 79, 116, 125, 135, 136, 160, 201, 227, 237
  operation-, 62, 125, 136, 160, 162, 163, 169, 170, 176, 180, 187, 190, 192, 199, 223, 228, 238
  out-, 52, 69, 72, 89, 97, 125, 135, 136, 139, 163, 171, 172, 175, 176, 182, 186, 187, 192, 223
  reset-, 125, 135, 136, 160, 162, 227
  sign-, 55, 58, 125

Reading circuit (tape)
  interpolator, 217

- Reading circuit (continued)
  - sequence, 149
- Reading pins
  - interpolator, 212, 213, 217
  - sequence, 38, 54, 56, 129, 263
  - tape readers, 221, 268
- Reading unit (see Tape readers)
- Read-out lights, 1, 10, 26, 59, 263, 290
- Read register, 34, 221, 223, 224, 229, 259
- Read relays, 130
- Reciprocal, 15, 29, 153
  - computation of, 153-160
  - out-relay, 162
  - timing, 159
- Reciprocal square root, 15, 29, 153
  - computation of, 163-167
  - timing, 169
- Register list, 269, 271, 272, 275, 287
- Registers
  - add, 67
  - addend, 15, 21, 26, 67, 72, 76, 78, 140, 176, 180, 182, 186, 187
  - argument, 30, 195
  - augend, 21, 25, 67, 72, 76-78, 171, 176, 180, 186, 187
  - check, 15, 38, 39, 58, 61, 140, 143, 269, 274, 286
  - code-interchange, 15, 34, 38, 39, 58, 130, 135, 187, 189, 286, 290, 292, 302
  - constant, 29, 51, 54, 55, 153, 162, 178, 183, 189
  - cross, 10, 26, 51, 57, 58, 263
  - exponent difference, 72, 74, 76
  - functional, 15, 29, 51, 62, 153
  - general layout of, 8, 9
  - input, 2, 10, 25, 51, 53, 56, 145, 219, 260, 261, 265, 286
  - interpolation storage, 195, 196, 198
  - larger exponent, 77
  - multiplicand, 89, 103
  - multiplier, 106, 111, 144
  - numbers of, 52, 56
  - print, 231, 232, 234, 239, 241, 242, 248, 249, 262
  - print-input, 34, 231, 232, 234, 237, 239, 242, 260, 262, 274, 286
  - product, 29, 103, 107, 110, 111, 113, 115
  - punch, 221, 226, 228, 229, 260
  - read, 34, 221, 223, 224, 229, 259
  - sign-control, 10, 38, 39, 40, 51, 58, 60, 62, 269, 270
  - sign-invert, 10, 25, 38, 39, 54, 58, 130, 163, 187, 189, 286, 290, 292
  - start-stop, 15, 38, 39, 61, 129, 143, 290
  - storage, 2, 10, 21, 25, 26, 29, 30, 33, 34, 51, 55, 56, 58, 62, 67, 69, 83, 88, 195, 198, 231, 262
  - sum, 78
    - addition unit, 21, 26, 78, 79, 82, 83
    - multiplication unit, 29, 103, 107, 110, 111, 113, 115
  - sum-with-carry, 48, 50
  - sum-without-carry, 46, 48, 50
    - addition, 67, 77, 80
    - multiplication, 97, 104-107
  - transfer, 10, 25, 51, 56, 121, 137, 139, 159, 161-163, 169, 170, 172, 175, 177, 180, 186, 187, 223, 263
- Relays
  - addition sequence, 69
  - alarm, 127, 140, 144, 159, 167
  - alternate impulse, 134, 136
  - auxiliary pin-selector, 132
  - buss-tie, 10, 25, 38, 130, 139, 145
  - contacts of, 7, 42, 43
  - differential, 244 (see Appendix III)
  - double coil, 2, 242
  - in-, 25, 26, 39, 51, 56-58, 61, 62, 69, 97, 139, 140, 198
  - in-shift, 74, 77
  - interpolator check, 204
  - latch, 2, 25, 46, 55, 58, 61
  - main machine alarm, 145
  - multiple selector, 100, 103, 106, 109, 111, 114
  - multiplier carry, 106, 107
  - multiplier sequence, 89, 97, 103, 110, 115
  - 9's and 10's carry, 77, 78
  - off-machine (see Stop read-out)
  - operate time of, 2, 42
  - operating voltage, 2
  - out-, 25, 39, 52, 55, 56, 63, 83, 89, 97, 103, 115, 116, 140, 141, 161, 186, 198, 223
  - pin, 118, 131, 132, 134, 135, 137
  - pin-selector, 132
  - print register check, 243
  - read, 130
  - reset of, 126
  - selector, 72
  - sequence change, 130, 144
  - sequence-tie, 130, 131, 136
  - sign-, 43
  - single coil, 2, 51, 52, 55
  - standardization of, 43
  - start, 127, 129, 130, 142
  - start read, 224
  - stop, 143
  - stop control, 142
  - stop read-out
    - addition, 79, 81, 84
    - multiplication, 108, 114, 116
  - tape positioning, 205
  - tape selector, 204
  - vane check alarm, 249
- Reperforators, 219
  - (see Tape punches)
- Rerun procedures, 260, 265, 270, 271, 278, 286, 290
- Reset circuits, 58
- Reset pyramid, 125, 135, 136, 160, 162, 227
- Reset switch, 249, 250
- Reversing switch, 255, 256
- Rotary switch, 151, 232, 239, 244, 250, 253, 254
- Round off, 265
  - (see Appendix II)
  - in addition, 84, 87
  - in multiplication, 110, 115, 117
- Routing switches, 151

- Sensing circuit
  - addition unit, 79

- Sensing circuit (continued)
  - functional unit, 29, 30, 161, 166, 169, 172, 175, 182, 183, 185, 187, 189, 190, 192
- Sequence change relays, 130, 144
- Sequence mechanism, 1, 15, 38, 39, 54, 62, 88, 118, 122, 132, 140, 145, 146, 257, 267
  - clutch, 122
  - drive, 118
  - selection, 127
  - starting, 120
  - stopping, 140
  - synchronizing (phasing), 118
- Sequence relays
  - addition, 67
  - multiplication, 89, 97, 103, 110, 115
- Sequence-tie relays, 130, 131, 136
- Shift circuits, 43, 44, 63, 76, 83, 239
- Sign-codes, 25, 37, 54, 67, 83, 88 (see Appendix I for List of Codes)
- Sign-control registers, 38-40, 51, 58, 60, 62, 269, 270
- Significant digits, 268
- Sign-invert register, 10, 25, 38, 39, 54, 58, 130, 163, 187, 189, 286, 290, 292
- Sign pyramid, 55, 58, 125
- Single coil relays, 2, 51, 52, 55
- "Slow" tapes, 270
- Spare printer, 259
- Sprocket drive
  - interpolator, 207, 209
  - sequence, 118, 122, 123
  - tape punch, 227
  - tape reader 221
- Start circuit, 61, 129
- Starting procedures, 126, 265, 278, 289 (see Chapter X)
- Starting tape, 260
- Start read relay, 224
- Start relay, 127, 129, 130, 142
- Start-stop register, 15, 38, 39, 61, 129, 143
- Step switch (see Rotary switch)
- Stop circuit, 61
- Stop control relay, 142
- Stop read-out relays
  - addition, 79, 81, 84
  - multiplication, 108, 114, 116
- Stop relays, 143
- Storage
  - external, 34, 219
- Storage capacity, 25, 267
- Storage registers, 2, 10, 25, 26, 29, 30, 33, 34, 51, 55, 56, 58, 62, 67, 69, 83, 88, 231, 262
  - codes for, 56
  - interpolation, 195, 196, 198
  - resetting of, 25
- Subtraction, 43
- Summation circuits, 67
- Sum register
  - addition unit, 21, 26, 78, 79, 82, 83
  - multiplication unit, 29, 103, 107, 110, 111, 113, 115
- Sum-with-carry, 48, 50
- Sum-without-carry, 46, 48, 50
  - addition unit, 67, 77, 80
  - multiplication, 97, 104-107, 110, 115
- Switches
  - addition alarm, 79
  - alarm bell, 127
  - argument, 236
  - check printing, 234, 236, 244
  - continuous run, 201, 259
  - cross register selector, 58
  - cut-off, 237, 260
  - emergency stop, 152, 256, 260
  - exponential alarm, 183
  - input register stop-read-out, 52
  - line grouping, 232
  - one-or-two interpolation, 33, 195, 198, 199
  - one-or-two problem, 26, 33, 57, 58, 127, 129, 130, 137, 139, 142, 198, 199
  - printer control, 2, 231, 232
  - reset, 249, 250
  - reversing, 255, 256
  - rotary, 151, 232, 239, 244, 250, 253, 254
  - routing, 151
  - selector, 140
  - sequence mechanism
    - limit, 122, 123
    - reset, 126
    - run, 120
    - selector, 127
    - start, 120
    - synchronize, 120

- Tapes
  - control, 15, 34, 40, 54, 123, 135, 149, 254, 271-275, 286
  - functional, 30, 33, 39, 195, 198, 207, 254
  - preparation of, 37, 254, 265 (see Appendix III)
  - reproduction of, 255 (see Appendix III)
- Tape positioning relays, 205
- Tape preparation table, 1, 34, 37, 219, 254, 255 (see Appendix III)
- Tape punches, 15, 34, 195, 219, 221, 226, 259, 267, 268, 273
  - timing, 227
- Tape readers, 2, 10, 34, 54, 56, 123, 199, 219, 221, 223, 259, 268
  - timing, 221
- Tape reproduction table, 1, 195, 254, 255 (see Appendix III)
- Tape selector relays, 204
- Telegraph equipment
  - printing, 7, 34, 219
  - tape punching, 219
  - tape reading, 219
- Testing, 261-263
- Test panels, 1, 2, 84, 126, 132, 145, 146, 149, 150, 260, 262, 270, 290
  - read-out circuits, 149, 150
- Time delay controls, 151, 260
- Time scale, 7
- "Times-two times-five" register, 62, 65, 185, 302
- Timing
  - addition unit, 74
  - arctangent, 190

Timing (continued)
  cosine, 185
  exponential, 180
  interpolators, 201, 205
  logarithm, 174
  multiplication, 95
  printer, 235
  reciprocal, 159
  reciprocal square root, 169
  tape punching, 227
  tape reading, 221
Tolerance, 25, 266, 268, 272-274, 285, 293
Transfer buss, 10, 33, 37, 53, 82, 83, 100, 116, 117, 162, 178, 186, 187, 190, 192, 234, 237
Transfer registers, 10, 21, 25, 26, 121, 137, 139, 159, 161-163, 169, 170, 172, 175, 177, 180, 186, 187, 223, 263
Transmitter, 219
  (see Tape reader)
Trouble hunting procedures, 261-263

Vane check circuit, 252
Vane check alarm relay, 249

Western Union Telegraph Company, 221
  equipment of, 219